Bonfiglioli
Riduttori

serie 300M

Riduttori epicicloidali modulari

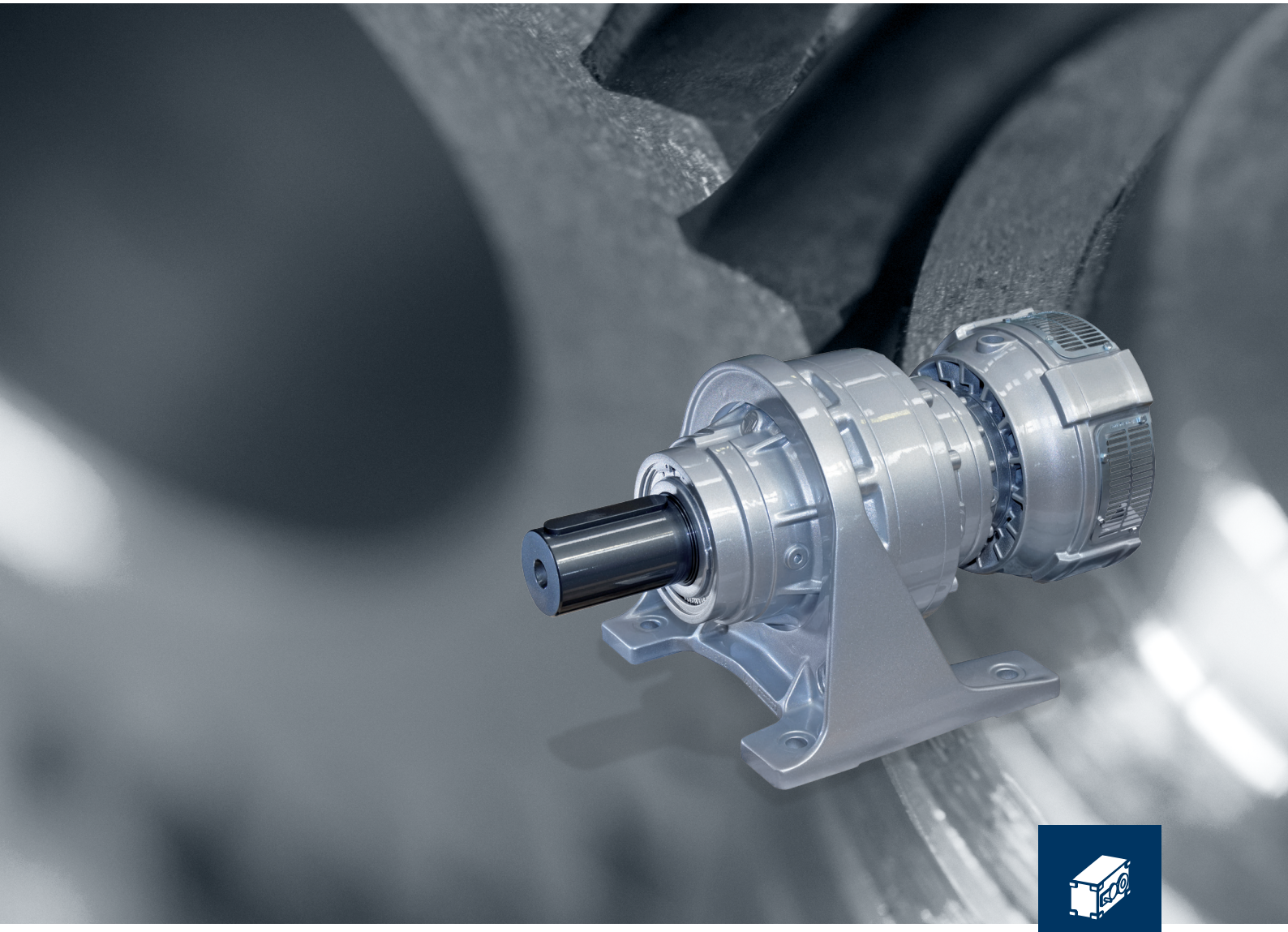

PRODUCT

INCLUDED

Bonfiglioli
Forever Forward

Revisioni

L'indice di revisione del catalogo è riportato a pag. 556. Al sito www.bonfiglioli.com sono disponibili i cataloghi con le revisioni aggiornate.

1 SIMBOLOGIA E UNITÀ DI MISURA

Simbolo	Unità di misura	Descrizione
$A_{c\ 1,2}$	[N]	Carico assiale di calcolo
$A_{n\ 1,2}$	[N]	Carico assiale nominale
A_{r2}	[N]	Carico assiale in uscita riduttore
F_h	–	Fattore di durata per calcolo riduttori
$F_{h\ 1,2}$	–	Fattore di durata per calcolo cuscinetti alberi
$f_{n\ 1,2}$	–	Fattore di velocità per carichi sugli alberi
f_L	–	Fattore di durata
f_m	–	Fattore di maggiorazione
$f_{h\ 1,2}$	–	Fattore correttivo per carichi sugli alberi
f_S	–	Fattore di servizio
f_S'	–	Fattore di servizio richiesto dall'applicazione
f_t	–	Fattore termico
f_v	–	Fattore di velocità
h	[h]	Durata in ore
i	–	Rapporto di riduzione
K_a	–	Fattore di sollecitazione carico assiale
K_r	–	Fattore di sollecitazione del carico radiale
l	–	Rapporto di intermittenza
M_2	[Nm]	Coppia trasmessa in uscita riduttore
M_{c2}	[Nm]	Coppia di calcolo in uscita riduttore
M_{2REF}	[Nm]	Coppia di riferimento
M_{n2}	[Nm]	Coppia nominale in uscita riduttore
M_{2max}	[Nm]	Coppia massima in uscita riduttore
Mb	[Nm]	Coppia nominale del freno
$M_{r\ 1,2}$	[Nm]	Coppia richiesta al riduttore
$n_{1,2}$	[min^{-1}]	Velocità angolare

Simbolo	Unità di misura	Descrizione
p	[bar]	Pressione olio idraulico
P_1	[kW]	Potenza max. trasmissibile in entrata riduttore
P_1'	[kW]	Potenza max. trasmessa in entrata riduttore
P_2	[kW]	Potenza trasmessa in uscita riduttore
P_n	[kW]	Potenza nominale motore
P_{r1}	[kW]	Potenza richiesta in entrata
P_{r2}	[kW]	Potenza in uscita a n_2 max
P_{r2}'	[kW]	Potenza in uscita a n_2 min
P_S	[kW]	Potenza da smaltire
P_t	[kW]	Potenza termica riduttore
Q	[l/min]	Portata olio idraulico
$R_{c\ 1,2}$	[N]	Carico radiale (di calcolo)
$R_{n1\ 1,2}$	[N]	Carico radiale nominale in mezzeria alberi
$R_{x\ 1,2}$	[N]	Carico radiale nominale riduttore ricalcolato rispetto a diversi punti di applicazione del carico
t_a	[°C]	Temperatura ambiente
t_S	[°C]	Temperatura superficiale
t_o	[°C]	Temperatura dell'olio
V	[cm^3]	Cilindrata motore idraulico
V_c	[cm^3]	Cilindrata motore idraulico (di calcolo)
X	[mm]	Distanza di applicazione del carico dallo spallamento albero
η_d	–	Rendimento dinamico
Z	–	Frequenza di avviamento

$_1$ valore riferito all'albero veloce

$_2$ valore riferito all'albero lento

Kg	Il simbolo identifica il peso.
	Le colonne contrassegnate da questo simbolo indicano i numeri di pagina dove sono riportate le dimensioni.
	Questo simbolo indica la pagina alla quale è rimandata l'informazione
	PERICOLO – ATTENZIONE Il segnale indica situazioni di grave pericolo che, se trascurate, possono mettere seriamente a rischio la salute e la sicurezza delle persone.
	IMPORTANTE Il segnale indica informazioni tecniche di particolare importanza da non trascurare.
Ex	Riferimento alle apparecchiature conformi alla Direttiva "ATEX"
	Questi simboli evidenziano il punto di montaggio degli accessori.
	Le parti in nero di questi simboli evidenziano la collocazione delle entrate dei riduttori.

12 Nm	Il numero associato al simbolo indica la coppia da applicare per il serraggio delle viti.
	Freno negativo a dischi multipli
	Predisposizione motore idraulico.
	Coperchio per flangiatura in ingresso standard.
	Esecuzione in linea.
	Esecuzione angolare.
	Esecuzione combinata con riduttore a vite senza fine.
	Esecuzione combinata con riduttore ad assi ortogonali.

2 INTRODUZIONE

In questo catalogo la BONFIGLIOLI RIDUTTORI presenta la sua gamma di riduttori epicicloidali modulari serie 300M. Questa serie è stata ampliata ed arricchita di nuove grandezze disponibili, miglioramenti tecnici apportati e dall' estensione della modularità totale fino alle grandezze superiori. Tale caratteristica costruttiva si traduce in una migliore flessibilità produttiva interna, nella possibilità di avere in tempi brevi prodotti nelle grandezze ed esecuzioni richieste, sia direttamente dall'azienda che dalle filiali appartenenti alla organizzazione di vendita BONFIGLIOLI localizzate in numerosi paesi del mondo.

I riduttori sono verificati secondo i seguenti standard:

ISO 6336 : 2006 - Metodo B per gli ingranaggi
ISO 281 per i cuscinetti
DIN 743 : 2012 per gli alberi

3 TEMPERATURE LIMITE AMMESSE

Simbolo	Descrizione / Condizione	Valore (*)	
		Olio Sintetico	Olio Minerale
t_a	Temperatura ambiente		
$t_{au\ min}$	Temperatura ambiente minima di utilizzo	**-30°C**	**-10°C**
$t_{au\ Max}$	Temperatura ambiente massima di utilizzo	**+50°C**	**+40°C**
$t_{as\ min}$	Temperatura ambiente minima di stoccaggio	**-40°C**	**-10°C**
$t_{as\ Max}$	Temperatura ambiente massima di stoccaggio	**+50°C**	**+50°C**
t_s	Temperatura superficiale		
$t_{s\ min}$	Temperatura minima superficiale del riduttore per avviamento con carico parziale (#)	**-25°C**	**-10°C**
$t_{sc\ min}$	Temperatura minima superficiale del riduttore per avviamento a pieno carico	**-10°C**	**-5°C**
$t_{s\ Max}$	Temperatura massima superficiale della cassa per utilizzo in modalità di funzionamento continuo a regime (rilevata in prossimità della zona veloce in entrata)	**+100°C**	**+100°C** (@)
t_o	Temperatura dell'olio		
$t_{o\ Max}$	Temperatura massima dell'olio per utilizzo in modalità di funzionamento continuo a regime	**+95°C**	**+95°C** (@)

(*) = Per i valori minimi e massimi specifici per le diverse viscosità d'olio, come pure per l'uso di circuiti idraulici, riferirsi alla tabella "Scelta della viscosità ottimale dell'olio". Per i valori di t_a < -20°C e t_s, t_o > 80 °C, scegliere (per quanto consentito in fase di configurazione prodotto) la tipologia di tenuta nel materiale più idoneo al tipo di applicazione. Se necessario contattare il Servizio Tecnico Bonfiglioli.

(@) = Per i valori di t_s, t_o > 80°C e < 95 °C, è sconsigliato l'utilizzo per funzionamenti in continuo.

(#) = Per l'avviamento a pieno carico è consigliabile l'uso di una rampa graduale e prevedere un maggior assorbimento del motore. Se necessario contattare il Servizio Tecnico Bonfiglioli.

4 CARATTERISTICHE

La serie 300M è una gamma di riduttori epicicloidali multimpiego azionabili da motori idraulici ed elettrici. Le caratteristiche di base sono:

• 20 grandezze di costruzione modulare

• coppie in uscita fino a 1.286.700 Nm

• potenze trasmissibili fino a 1050 kW

• rapporti da 1:3,4 a 5234

• configurazione:
- in linea, da 1 a 4 stadi di riduzione
- angolare (primo stadio con coppia conica Gleason) da 2 a 4 stadi

• combinazioni con:
- riduttori a vite senza fine
- riduttori ad assi ortogonali

• esecuzioni per montaggio con flangia, con piede, pendolare

• alberi in uscita: con linguetta, scanalati, femmina scanalati, cavi cilindrici per montaggio pendolare con giunto ad attrito.

• predisposizioni motore per:
- motori elettrici normalizzati IEC
- motori compatti per le esecuzioni in linea fino alla grandezza 307
- motori idraulici dei principali costruttori e secondo SAE J744C

• albero cilindrico in entrata

• motoriduttori con:
- motori elettrici IEC
- motori idraulici orbitali BONFIGLIOLI TRASMITAL MG

• freni idraulici negativi di stazionamento per utilizzo con motori idraulici

• accessori per alberi uscita:
- flange
- pignoni
- barre scanalate
- giunti ad attrito

Altre caratteristiche costruttive sono:

• elevato rapporto coppia trasmissibile/dimensioni d'ingombro

• elevata supportazione radiale e assiale grazie all'utilizzo, sulle versioni H e P, di cuscinetti a rulli conici

• elevati rendimenti

• collegamenti fra gli organi interni tramite profili scanalati, non tramite linguette

• stadi di riduzione con porta-planetari flottanti per la ottimale ripartizione dei carichi fra gli ingranaggi planetari

• carcasse in ghisa sferoidale

Esecuzioni

(A 1)

Esecuzione	Potenza	Coppia	Rapporti	Rendimento	Rumorosità
	$0.25 \le P_n$ [kW] ≤ 55	$M_{2REF} \le 1286700$ Nm	$3.4 \le i \le 2916$	Elevato	Media
	$0.25 \le P_n$ [kW] ≤ 55	$M_{2REF} \le 656000$ Nm	$7 \le i \le 953$	Elevato	Media
	$0.12 \le P_n$ [kW] ≤ 22	$M_{2REF} \le 656000$ Nm	$370 \le i \le 5234$	Medio	Bassa
	$0.12 \le P_n$ [kW] ≤ 22	$M_{2REF} \le 15680$ Nm	$18.7 \le i \le 731$	Elevato	Bassa

5 FORME COSTRUTTIVE

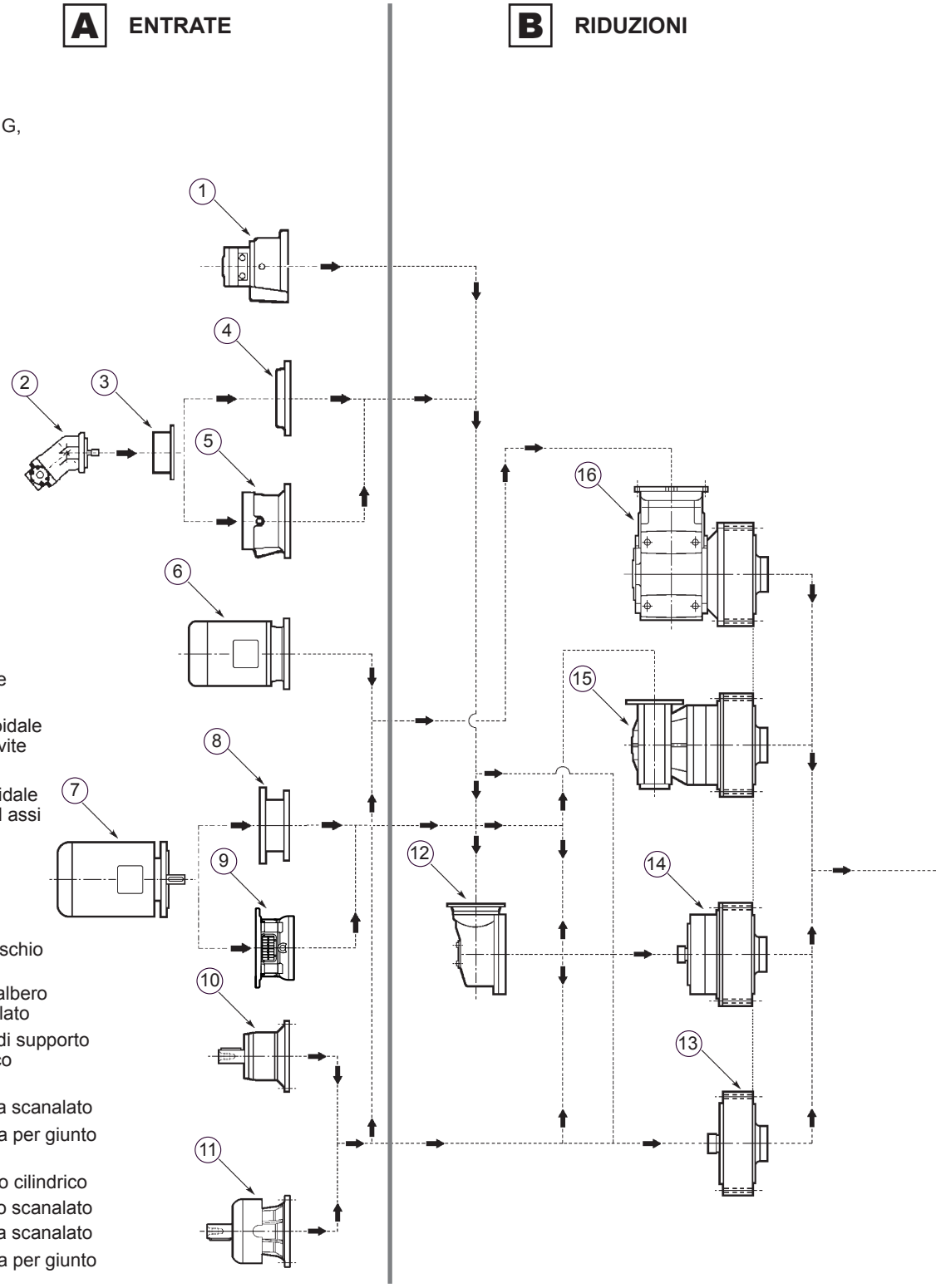

A

1 Motore idraulico orbitale MG, con e senza freno
2 Motore idraulico
3 Predisposizione motore idraulico
4 Coperchio
5 Freno negativo
6 Motore elettrico compatto
7 Motore elettrico IEC
8 Predisposizione motore elettrico
9 Predisposizione motore elettrico con ventola integrata
10 Albero veloce
11 Albero veloce con ventola

B

12 Stadio riduzione angolare
13 Uno stadio di riduzione epicicloidale
14 Due o più stadi di riduzione epicicloidale
15 Stadio di riduzione epicicloidale combinato con riduttore a vite senza fine
16 Stadio di riduzione epicicoidale combinato con riduttore ad assi ortogonali

C

17 **MC/MZ** - Uscita albero maschio cilindrico o scanalato
18 **HC/HZ** - Uscita rinforzata albero maschio cilindrico o scanalato
19 **PC/PZ** - Uscita con piede di supporto ed albero maschio cilindrico o scanalato
20 **FZ** - Uscita albero femmina scanalato
21 **FP** - Uscita albero femmina per giunto ad attrito
22 **HC** - Uscita albero maschio cilindrico
23 **HZ** - Uscita albero maschio scanalato
24 **FZ** - Uscita albero femmina scanalato
25 **FP** - Uscita albero femmina per giunto ad attrito
26 **PC** - Piede di supporto
27 **VK** - Uscita rinforzata con albero cilindrico per agitatori / miscelatori
28 **FDK** - Uscita albero femmina con doppia sede per linguetta
29 **FZP** - Uscita albero femmina scanalato con dispositivo di bloccaggio assiale

D

30 **W0A** - Flangia
31 **P_** - Pignone
32 **M0A** - Manicotto liscio
33 Fondello d'arresto
34 **B0A** - Barra scanalata
35 **G0A** - Giunto ad attrito

C USCITE

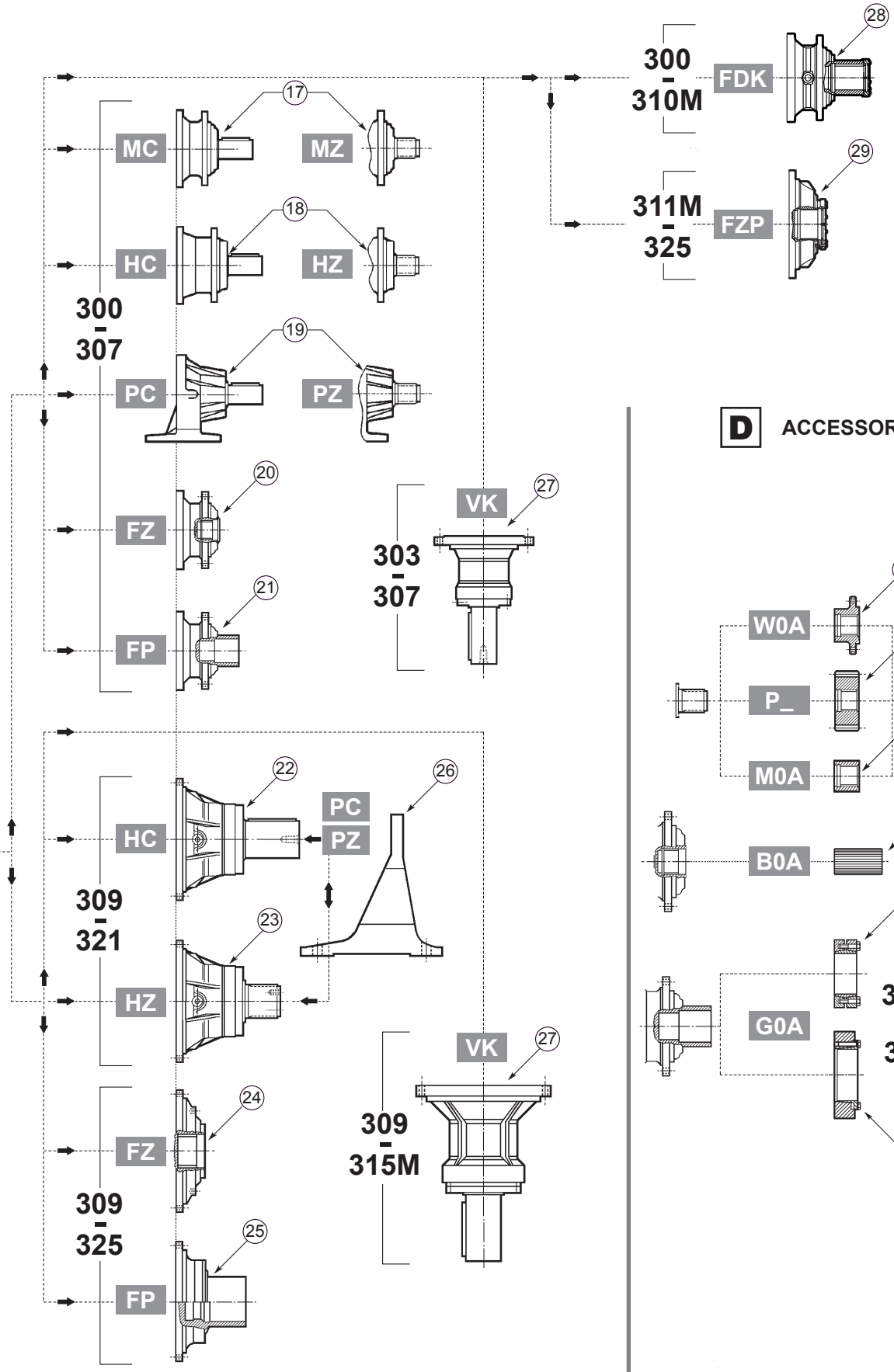

D ACCESSORI

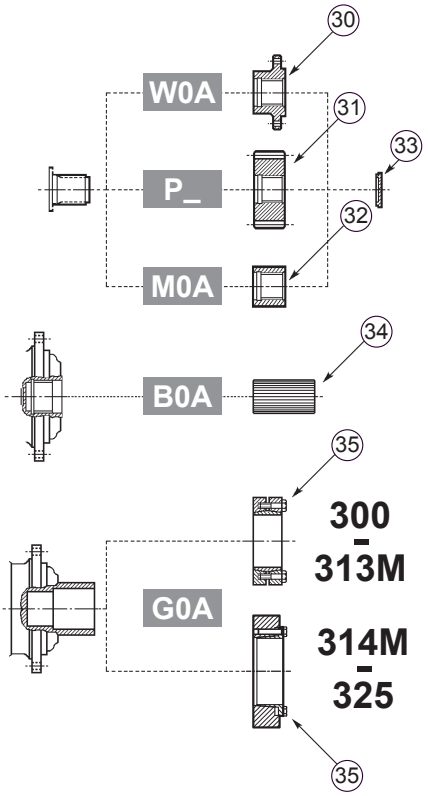

INFORMAZIONI GENERALI

I paragrafi che seguono riportano una serie di informazioni sugli elementi indispensabili per la scelta e il corretto utilizzo dei motoriduttori.

6 COPPIA IN USCITA

(A 2)

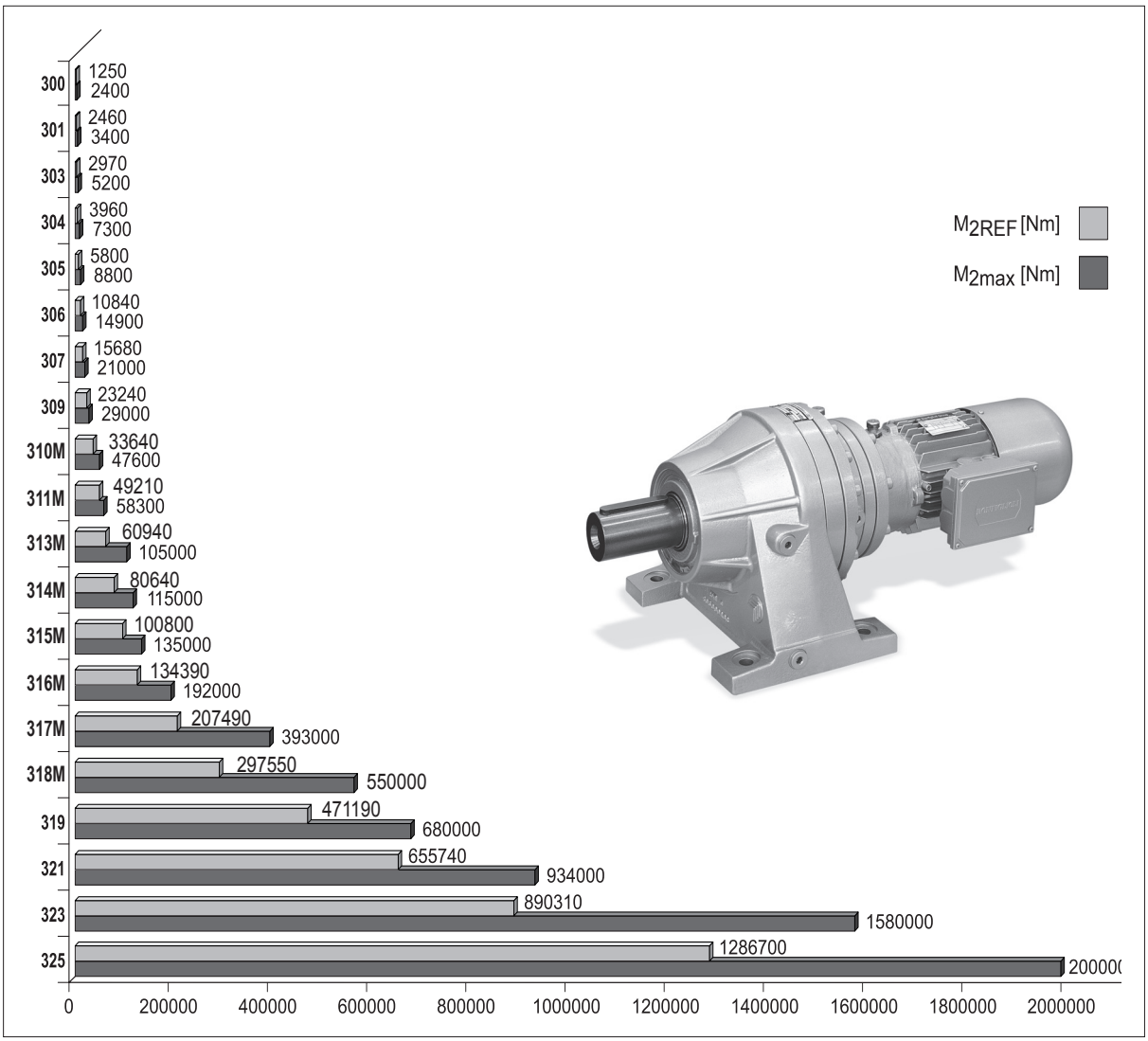

6.1 Coppia di riferimento M_{2REF} [Nm]

È il dato identificativo della taglia e coincide con il valore massimo della coppia nominale M_{n2} per un fattore di durata n_2 x h = 10000 nella configurazione monostadio (L1).

6.2 Coppia nominale M_{n2} [Nm]

È la coppia nominale trasmissibile dal riduttore con carico uniforme e nelle condizioni indicate nel metodo di calcolo.

6.3 Coppia massima M_{2max} [Nm]

È il valore di coppia in uscita sopportabile dal riduttore in condizioni statiche o quasi statiche. È inteso come carico istantaneo o come coppia di spunto sotto carico.
I valori riportati nelle tabelle sono validi solo nelle versioni di uscita con albero scanalato (accessori esclusi).

6.4 Coppia richiesta M_{r2} [Nm]

Rappresenta la coppia richiesta dall'applicazione. Il suo valore dovrà sempre essere uguale, o inferiore, alla coppia nominale M_{n2} del riduttore.

7 POTENZA

7.1 Potenza in entrata P_{n1} [kW]

La grandezza P_{n1} rappresenta la potenza massima applicabile al riduttore nelle condizioni di:
- azionamento alla velocità di comando n_1
- durata teorica di 10000 ore
- fattore di servizio f_s=1

Occorre che sia sempre verificata la formula:

$$P_1' \times fs \leq P_1 \quad (1)$$

7.2 Potenza in uscita P_2 [kW]

Il parametro rappresenta la potenza netta trasmessa all'albero lento del riduttore.
Il suo valore si può calcolare con le seguenti formule:

Per i valori del rendimento η_d vedi tabella (A3).

$$P_2 = P_1 \times \eta_d \quad (2)$$

$$P_2 = \frac{M_{r2} \times n_2}{9550} \quad (3)$$

7.3 Potenza termica P_t [kW]

È il parametro che indica il limite termico del riduttore. Il valore è reperibile nelle tabelle dati tecnici riduttori e motoriduttori e rappresenta la potenza trasmissibile in servizio continuo in corrispondenza della velocità di azionamento n_1 e alla temperatura ambiente di 20°C senza che la temperatura del lubrificante superi la temperatura di 85-90°C e conseguentemente la superficie del riduttore i 75-80°C, in assenza di un sistema di raffreddamento ausiliario.

8 RENDIMENTO

8.1 Rendimento dinamico η_d

È rappresentato dal rapporto fra la potenza misurata all'albero lento P_2 e quella applicata all'albero veloce P_1:

$$\eta_d = \frac{P_2}{P_1} \quad (4)$$

I valori indicativi di rendimento sono riportati nella tabella seguente.

(A 3)

N° stadi	Esecuzione		
	Epicicloidale	Combinato con riduttore a vite senza fine	Combinato con riduttore angolare
1	0.97	—	—
2	0.94	0.73	—
3	0.91	0.70	0.91
4	0.88	—	—

9 RAPPORTO DI RIDUZIONE i

È definito come il rapporto fra la velocità di comando dell'albero veloce e la velocità misurata all'albero lento del riduttore.

$$i = \frac{n_1}{n_2} \quad (5)$$

10 VELOCITÀ ANGOLARE

10.1 Velocità in entrata n_1 [min^{-1}]

È la velocità con la quale è azionato il riduttore.
Coincide con la velocità del motore nel caso in cui questo sia collegato direttamente al riduttore.
La velocità di comando non deve mai superare il valore n_{1max} indicato nelle tabelle dati tecnici dei riduttori.

10.2 Velocità in uscita n_2 [min^{-1}]

È funzione della velocità in comando $\mathbf{n_1}$ e del rapporto di trasmissione **i**, secondo la relazione:

$$n_2 = \frac{n_1}{i} \quad (6)$$

11 FATTORE DI SERVIZIO f_S

È rappresentato dal rapporto fra la potenza trasmissibile dal riduttore in condizioni nominali e la potenza del motore elettrico installato.

$$f_S = \frac{P_{n1}}{P_1} \quad (7)$$

12 FATTORE DI SERVIZIO RICHIESTO IN FUNZIONE DELL'APPLICAZIONE f_S'

È un fattore che associa un valore numerico alla gravosità dell'applicazione. Il parametro tiene conto, con qualche inevitabile approssimazione, della variabilità del carico col quale opera il riduttore, del tipo di servizio e della durata di funzionamento.
La tabella (A4) fornisce una indicazione per la determinazione del fattore di servizio richiesto in funzione dell'applicazione.

(A 4)

Fattore di servizio f_S' richiesto in funzione dell'applicazione						
Natura del carico	N° avviamenti /ora	Durata totale di funzionamento (h)				
		≤ 5000	10000	15000	25000	50000
		Durata di funzionamento giornaliera (h)				
	z	h < 4	4 < h < 8	8 < h < 12	12 < h < 16	16 < h < 24
Uniforme	Z < 10	0.90	1.00	1.15	1.30	1.60
	10 < Z < 30	0.95	1.15	1.30	1.50	1.80
	30 < Z < 100	1.00	1.25	1.45	1.60	2.00
Variabile con urti moderati	Z < 10	1.00	1.25	1.45	1.60	2.00
	10 < Z < 30	1.10	1.40	1.60	1.80	2.20
	30 < Z < 100	1.20	1.50	1.70	2.00	2.40
Variabile con urti forti	Z < 10	1.20	1.50	1.70	2.00	2.40
	10 < Z < 30	1.30	1.60	1.80	2.10	2.60
	30 < Z < 100	1.40	1.75	2.00	2.30	2.80

13 FATTORE DI DURATA F_{h1}, F_{h2}

È un fattore derivato dal prodotto della velocità angolare in entrata n_1 o in uscita n_2 per le ore di effettivo funzionamento h, esclusi i tempi di sosta.

$$F_{h1} = (n_1 \times h) \quad (8)$$

$$F_{h2} = (n_2 \times h) \quad (9)$$

Il fattore di durata è direttamente proporzionale al numero di rotazioni che compie il riduttore nella sua intera durata di servizio.

14 SELEZIONE PRODOTTO

Bonfiglioli Forever Forward	DATI TECNICI NECESSARI PER LA SELEZIONE DI 300M	Nr:	
		Data:	
		Rev_	Data:

		A)	*DATI GENERALI*						
#	1		Azienda / Cliente						
#	2		Contatto						
#	3		Filiale / Distributore						
#	4		Quantità in ordine						
	5		Tempi di consegna						
		B_1)	*MOTORE ELETTRICO*			*B_2)*	*MOTORE IDRAULICO*		
	6		Tipo di motore						
#	7	P_{n1}	Potenza nominale del motore		[kW]	V	Cilindrata		[cm³]
#	8	P_{r1}	Potenza richiesta dal motore		[kW]	Δp	Max caduta di pressione		[bar]
	9	n_1	Velocità di ingresso		[min-1]	Q	Portata massima dell'olio		[l/min]
	10		Numero di poli						
	11		Montaggio del motore: B3 - B5 - B14						
		C_1)	*RIDUTTORE EPICICLOIDALE*			*C_2)*	*AMBIENTE ATEX [GROUPII] - 2014/34/EU*		
#	12		Configurazione del riduttore						
#	13	i	Rapporto di riduzione			Categoria: [**2** = standard / **3** = speciale]			
#	14	n_2	Velocità di uscita		[min-1]	Atmosfera: [**G** = gas / **D** = polvere]			
#	15	M_{r2}	Coppia richiesta in uscita		[Nm]	Zona: [**1 - 21** / **2 - 22**]			
#	16	M_{p2}	Coppia di picco richiesta in uscita		[Nm]	Classe di temperatura [T4 / 135°C]			
#	17	f_S	Fattore di servizio richiesto						
	18		Senso di rotazione dell'albero di uscita [vista frontale]:		**CW**		**CCW**		
#	19	L_{10H}	Durata dei cuscinetti		[h]				
#	20		Durata ingranaggi		[h]				
	21	SF_{min}	Sicurezza a piede dente		standard di riferimento (ISO preferito)				
	22	SH_{min}	Sicurezza a fianco dente		standard di riferimento (ISO preferito)				
		D)	*CARICHI SUPPLEMENTARI*						
	23	R_{c2}	Carico radiale su albero in uscita		[N]				
	24	x_2	Distanza di applicazione del carico dalla battuta dell'albero		[mm]				
	26	R_{c1}	Carico radiale su albero in entrata		[N]				
	27	x_1	Distanza di applicazione del carico dalla battuta dell'albero		[mm]				
	29	A_{n2}	Carico assiale su albero in uscita (+ / -)		[N]				
	30	A_{n1}	Carico assiale su albero di ingresso (+ / -)		[N]				
		E)	*APPLICAZIONE*						
#	31		Tipo di applicazione						
	32		Ciclo di lavoro	Tempo della fase %	Tempo della fase hours	Coppia di uscita del riduttore [Nm]	Velocità di uscita del riduttore [min-1]		
				,,,,	,,,,				
				,,,,	,,,,				
				,,,,	,,,,				
				,,,,	,,,,				
				,,,,	,,,,				
	33		Note sul Ciclo di lavoro:						
			Tipo di servizio	**S1**	**S2**	**S3**	**S4-S8**		
	34	v_A	Velocità di aria nell'ambiente		[m/s]	≤ 0.5	> 0.5 ≤ 1.4	> 1.4	
#	35	t_a	Campo della temperatura ambiente		[°C]				
	36		Altezza sul livello del mare		[m]				
	37		Fattore di servizio secondo classificazione FEM	T-	L-	M-			
		F)	*OPZIONI O RICHIESTE SUPPLEMENTARI*						
	38		Lubrificazione						
	39		Sistemi di raffreddamento supplementari						
	40		Vernice di rivestimento						
	41		Richieste specifiche di test						
		G)	*NOTE*						
	42		Note e requisiti aggiuntivi richieste dai clienti:						
#	43		**Codice PLP se presente per riduttori speciali**						

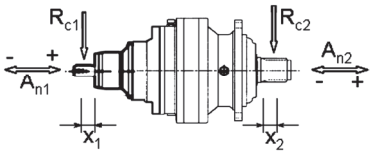

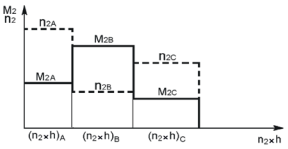

Obbligatorio per la selezione

Una copia di questa, debitamente compilata in ogni parte, può essere inviata al nostro Servizio Tecnico per la selezione del riduttore più idoneo per la specifica applicazione.

14.1 GUIDA ALLA SELEZIONE DEL PRODOTTO

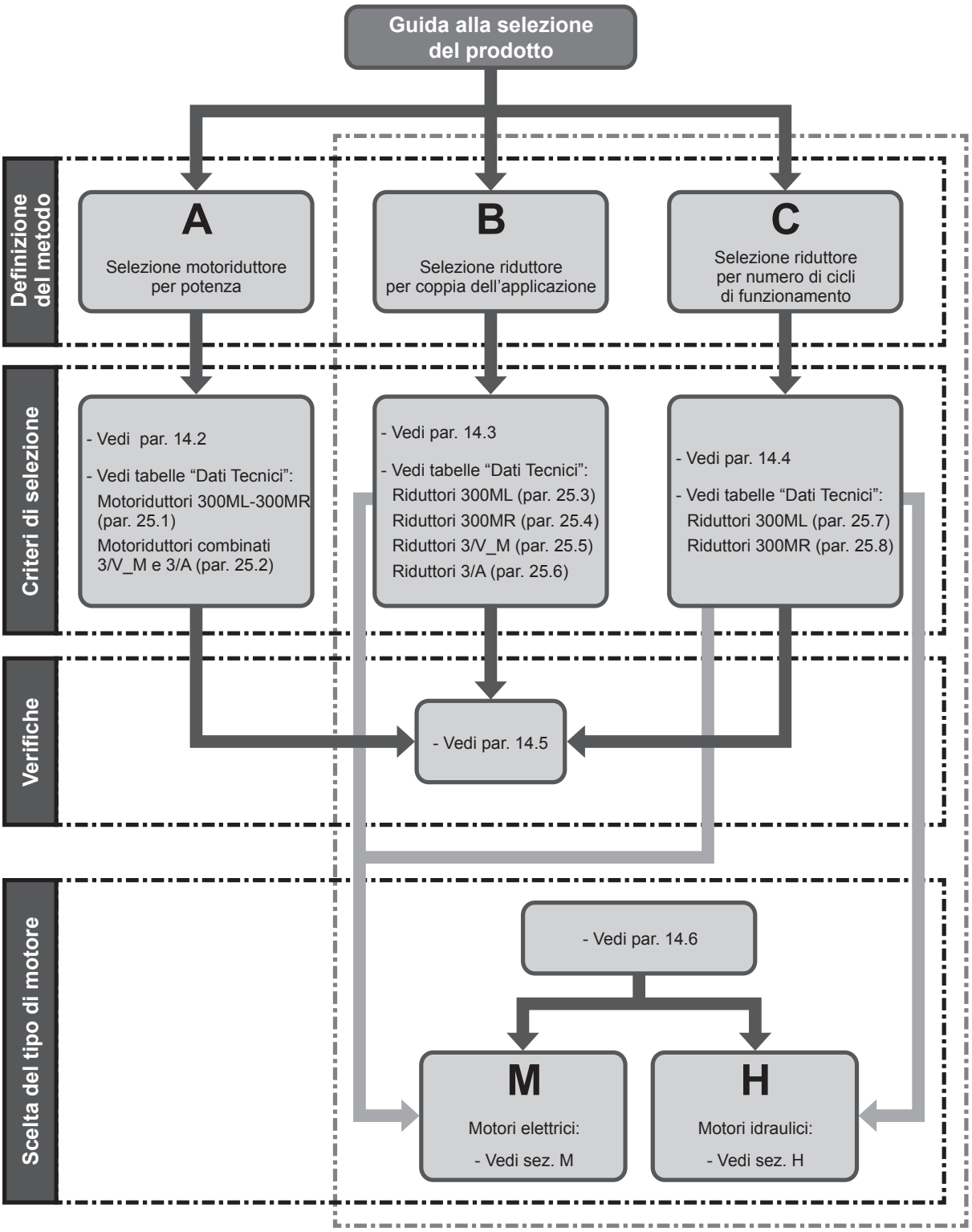

N.B.
I criteri di scelta e i dati tecnici riportati in questo catalogo non sono validi per tutte le applicazioni, come ad esempio impianti di sollevamento, dove il riduttore funziona come organo di sicurezza verso persone e/o cose.
In questi casi la selezione del riduttore deve essere fatta con criteri specifici, ed eventualmente in accordo alle vigenti norme di sicurezza, per cui è necessario interpellare il Servizio Tecnico di BONFIGLIOLI.

Per la selezione di riduttori in esecuzione Atex, consultare anche il capitolo specifico a pag. 480.

14.2 METODO A (Selezione motoriduttore per potenza)

In base al tipo di applicazione definire:
a) il fattore di servizio richiesto $\mathbf{f_S'}$ (vedi tab A4);

b) La potenza necessaria all'azionamento:

$$P_{r1} = \frac{M_{r2} \times n_2}{9550 \times \eta_d} \quad (10)$$

La tabella (A3) riporta i valori indicativi di rendimento ηd per vari tipi di riduttore.

c) Disponendo del valore di potenza $\mathbf{P_{r1}}$ preventivamente calcolato e della velocità richiesta all'albero $\mathbf{n_2}$, consultare le tabelle di selezione motoriduttori identificando la tabella relativa alla potenza $\mathbf{P_n}$ normalizzata maggiore o uguale a $\mathbf{P_{r1}}$:

$$P_n \geq P_{r1} \quad (11)$$

Se non diversamente indicato, la potenza $\mathbf{P_n}$ dei motori riportata a catalogo si riferisce al servizio continuo S1.
Per i motori utilizzati in condizioni diverse da S1, può essere opportuno identificare il tipo di servizio previsto con riferimento alle Norme CEI 2-3/IEC 60034-1.
In particolare, per i servizi da S2 a S8 e per le grandezze motore uguali o inferiori a 132, è possibile ottenere una maggiorazione della potenza rispetto a quella prevista per il servizio continuo.
In questo caso la condizione da soddisfare sarà:

$$P_n = \frac{P_{r1}}{f_m} \quad (12)$$

Il fattore di maggiorazione $\mathbf{f_m}$ è ricavabile dalla tabella (A5).

(A 5)

	SERVIZIO						
	S2			**S3***			**S4-S8**
	Durata del ciclo			Rapporto di intermittenza			Interpellarci
	10	**30**	**60**	**25%**	**40%**	**60%**	
f_m	1.35	1.15	1.05	1.25	1.15	1.1	

* La durata del ciclo dovrà comunque essere uguale, o inferiore, a 10 minuti; se superiore interpellare il nostro Servizio Tecnico.

Rapporto di intermittenza: vedere formula (25).

Selezionare infine, in corrispondenza della velocità all'albero $\mathbf{n_2}$, il motoriduttore che presenta un fattore di servizio $\mathbf{f_S}$ che garantisca la seguente condizione:

$$f_S \geq f_S' \quad (13)$$

In caso di configurazione uscita **FP**, vedere sezione Verifiche (Cap. 14.5 - punto g).

14.3 METODO B (Selezione riduttore per coppia dell'applicazione)

In base al tipo di applicazione definire:
a) il fattore di servizio richiesto $\mathbf{f_S'}$ (vedi tab A4);

b) con il valore di coppia richiesta in uscita $\mathbf{M_{r2}}$, determinare la coppia di calcolo:

$$M_{c2} = M_{r2} \times f_S' \quad (14)$$

c) In base alla velocità all'albero lento $\mathbf{n_2}$ e a quella di comando $\mathbf{n_1}$, calcolare il rapporto di trasmissione:

$$i = \frac{n_1}{n_2} \quad (15)$$

d) disponendo dei valori di $\mathbf{M_{c2}}$ e **i**, consultare la tabella dati tecnici riduttori relativa alla velocità di comando $\mathbf{n_1}$ e selezionare da questa il riduttore con il rapporto di trasmissione più prossimo a quello calcolato e che assicuri contemporaneamente la condizione:

$$M_{n2} \geq M_{c2} \quad (16)$$

Se al riduttore dovrà essere applicato un motore elettrico, verificarne l'applicabilità consultando le tabelle delle predisposizioni possibili.

In caso di configurazione uscita **FP**, vedere sezione Verifiche (Cap. 14.5 - punto g).

14.4 METODO C (Selezione riduttore per numero di cicli di funzionamento)

a) In base al tipo di applicazione definire:
- Fattore di servizio richiesto $\mathbf{f_S'}$ (vedi tab A4)
- La durata di funzionamento richiesta h
- Il tipo di azionamento idraulico, elettrico, altro.

b) Con il valore della coppia richiesta in uscita M_{r2}, determinare la coppia di calcolo:

$$M_{c2} = M_{r2} \times f_S' \quad (17)$$

c) Con la durata richiesta h e la velocità di uscita n_2 calcolare il fattore di durata:

$$Fh_2 = (n_2 \times h) \quad (18)$$

d) Calcolare il rapporto di riduzione richiesto:

$$i = \frac{n_1}{n_2} \qquad (19)$$

e) Selezionare la grandezza del riduttore che con il rapporto più vicino a quello calcolato soddisfi la seguente condizione:

$$M_{c2} \leq M_{n2} \qquad (21)$$

$$Fh_2 \leq (n_2 \times h) \qquad (20)$$

dove M_{n2} e Fh_2 sono riportati sulle tabelle dati tecnici di ogni grandezza di riduttore.

Nel caso di applicazioni caratterizzate da variazioni notevoli della coppia richiesta M_{r2} e della velocità n_2 una selezione più appropriata può essere fatta considerando una coppia richiesta equivalente data da:

$$M_{r2} = \sqrt[4]{\frac{(n_2 \times h)_A \times M_A^4 + (n_2 \times h)_B \times M_B^4 + (n_2 \times h)_C \times M_C^4 + \ldots\ldots}{(n_2 \times h)_A + (n_2 \times h)_B + (n_2 \times h)_C + \ldots\ldots}} \qquad (22)$$

riferita a:

(A 6)

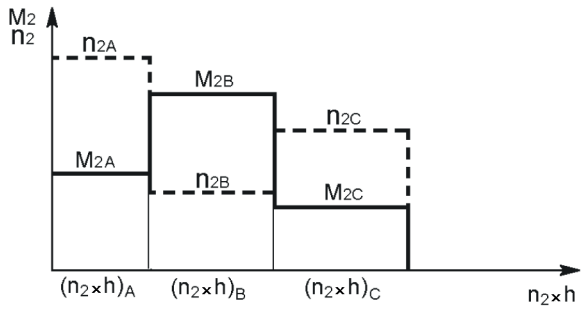

e calcolando il fattore di durata Fh con:

$$Fh_{calc} = (n_2 \times h)_A + (n_2 \times h)_B + (n_2 \times h)_C + \ldots \qquad (23)$$

Seguire poi la stessa procedura indicata con d); e).

In caso di configurazione uscita **FP**, vedere sezione Verifiche (Cap. 14.5 - punto g).

14.5 VERIFICHE

Effettuata la corretta selezione si raccomanda di procedere alle seguenti verifiche:

a) Potenza termica

Assicurarsi che la potenza termica del riduttore sia uguale, o superiore, alla potenza meccanica richiesta dall'applicazione. Vedi relazione (24).
In caso contrario provvedere ad applicare un sistema di raffreddamento ausiliario oppure selezionare un riduttore di grandezza superiore.
Per un tipo di servizio caratterizzato da una breve durata di funzionamento e da un tempo di sosta sufficientemente lungo da consentire il raffreddamento del gruppo, la potenza termica acquista scarsa rilevanza e si può rivelare trascurabile.
Se la temperatura ambiente è diversa da 20°C, il servizio è intermittente o la velocità di comando n_1 è diversa da quella indicata a riferimento è opportuno correggere il valore di P_t in funzione del fattore termico f_t e del fattore di velocità f_v riportati nella tabella (A7).
Verificare infine che sia sempre soddisfatta la relazione:

$$P_{r1} \leq P_t \times f_t \times f_v \qquad (24)$$

(A 7)

f_t					
t_a **max.** [°C]	Servizio continuo	Servizio intermittente			
		Rapporto di intermittenza % (I)			
		80	60	40	20
10	1.2	1.3	1.6	1.8	2.0
20	1.0	1.1	1.3	1.5	1.7
30	0.9	1.0	1.2	1.3	1.5
40	0.7	0.8	0.9	1.0	1.2
50	0.5	0.6	0.7	0.8	0.9

n_1	f_v
500	1.35
900	1.2
1500	1.0
1800	0.85

Il rapporto di intermittenza (I)% è dato dal rapporto fra il tempo di funzionamento a carico $\mathbf{t_f}$ e il tempo totale $(\mathbf{t_f} + \mathbf{t_r})$, con $\mathbf{t_r}$ = tempo di riposo, espresso in percentuale:

$$I = \frac{t_f}{t_f + t_r} \times 100 \qquad (25)$$

Se la potenza termica del riduttore in esecuzione convenzionale non soddisfa la condizione espressa dalla relazione (24) è suggerito ricorrere alle seguenti esecuzioni:

1) albero veloce cilindrico con ventola di raffreddamento, codici FV_ _
2) predisposizione ventilata motore elettrico, codici PF_ _

I valori di potenza termica sono espressi nella tabella che segue.

(A 8)

Potenza termica P_t [kW] @ n_1= 1450 min-1							
		FV_ _					
		05B	06B	07A	07B	010B	011B
303	L1	29	-	-	-	-	-
304	L1	30	-	-	-	-	-
305	L1	31	-	-	-	-	-
306	L1	-	45	-	-	-	-
	L2	31	-	-	-	-	-
307	L1	-	-	49	49	-	-
	L2	36	-	-	-	-	-
309	L1	-	-	52	52	-	-
	L2	36	-	-	-	-	-
310M	L1	-	-	-	-	62	-
	L2	-	49	-	-	-	-
	L3	36	-	-	-	-	-
311M	L1	-	-	-	-	-	62 (*)
	L2	-	-	53	52	-	-
	L3	36	-	-	-	-	-
313M	L1	-	-	-	-	-	-
	L2	-	-	57	57	-	-
	L3	36	-	-	-	-	-
314M	L2	-	-	-	-	67	-
	L3	-	52	-	-	-	-
	L4	33	-	-	-	-	-
315M	L2	-	-	-	-	-	72 (*)
	L3	-	-	57	57	-	-
	L4	36	-	-	-	-	-
316M	L2	-	-	-	-	-	72 (*)
	L3	-	-	57	57	-	-
	L4	36	-	-	-	-	-
317M	L2	-	-	-	-	-	77 (*)
	L3	-	-	62	62	-	-
	L4	36	-	-	-	-	-
318M	L3	-	-	-	-	-	62 (*)
	L4	-	-	45	45	-	-
319	L3	-	-	-	-	-	77 (*)
	L4	-	-	57	57	-	-
321	L3	-	-	-	-	-	87 (*)
	L4	-	-	62	62	-	-
323	L4	-	-	-	-	-	87 (*)
325	L4	-	-	-	-	-	87 (*)

* @ n_1 = 1150 min-1

Potenza termica P_t [kW] @ n_1= 1450 min-1			
		FV_ _	
		05B	06B
307	R2	52	-
309	R2	52	-
310M	R2 (B)	-	82
	R2 (C)	-	82
311M	R2 (B)	-	102
	R2 (C)	-	117
	R3	58	-
313M	R2 (B)	-	102
	R2 (C)	-	117
	R3	58	-
314M	R3 (B)	-	82
	R3 (C)	-	82
	R4	-	-
315M	R3 (B)	-	102
	R3 (C)	-	117
	R4	58	-
316M	R3 (B)	-	102
	R3 (C)	-	117
	R4	63	-
317M	R3 (B)	-	117
	R3 (C)	-	127
	R4	68	-
318M	R4 (B)	-	108
	R4 (C)	-	137
319	R4 (B)	-	122
	R4 (C)	-	142
321	R4 (B)	-	132
	R4 (C)	-	152

Potenza termica P_t [kW] @ n_1= 1450 min-1						
		PF_ _				
		160	180	200	225	250
303	L1	34	34	34	34	-
	L2	25	25	-	-	-
	L3	10	10	-	-	-
304 305	L1	52	52	52	52	-
	L2	35	35	-	-	-
	L3	20	20	-	-	-
306	L1	-	62	62	62	
	L2	45	45	45	45	-
	L3	25	25	-	-	-
307	L1	-	-	98	98	98
	L2	65	65	65	65	-
	L3	35	35	-	-	-
	L4	15	15	-	-	-
309	L1	-	-	125	125	125
	L2	60	60	60	60	-
	L3	35	35	-	-	-
	L4	15	15	-	-	-
310M	L1	-	-	-	135	135
	L2	-	60	60	60	60
	L3	40	40	40	40	-
	L4	20	20	-	-	-
311M	L1	-	-	-	135	135
	L2	-	-	90	90	90
	L3	40	40	40	40	-
	L4	30	30	-	-	-
313M	L2	-	-	95	95	95
	L3	40	40	40	40	-
	L4	30	30	-	-	-
314M	L2	-	-	-	105	105
	L3	-	50	50	50	50
	L4	30	30	30	30	-
315M 316M	L2	-	-	-	110	110
	L3	-	-	70	70	70
	L4	35	35	35	35	-
317M	L3	-	-	75	75	75
	L4	35	35	35	35	-
318M	L3	-	-	80	80	80
	L4	50	50	50	50	-
319	L3	-	-	-	90	90
	L4	-	-	60	60	60
321	L4	-	-	65	65	65
323	L4	-	-	-	80	80

N.B. I valori di potenza termica indicati nelle tabelle tecniche relative ad ogni grandezza, si riferiscono alle esecuzioni senza freno negativo a dischi multipli.
In caso di applicazioni con freni, interpellare la nostra organizzazione di vendita.

b) Sistemi ausiliari di raffreddamento

Qualora la potenza meccanica trasmessa sia superiore a quella termica trasmissibile (vedi tabelle dati tecnici riduttori), è possibile fornire il riduttore corredato di centralina di raffreddamento.

Le centraline autonome di raffreddamento sono unità composte da uno scambiatore di calore aria-olio, una motopompa, un filtro dell'olio da raffreddare, un elettroventilatore ed un impianto elettrico comprendente la protezione termica dei motori elettrici.
Caratteristica delle centraline è il basso livello di rumorosità.

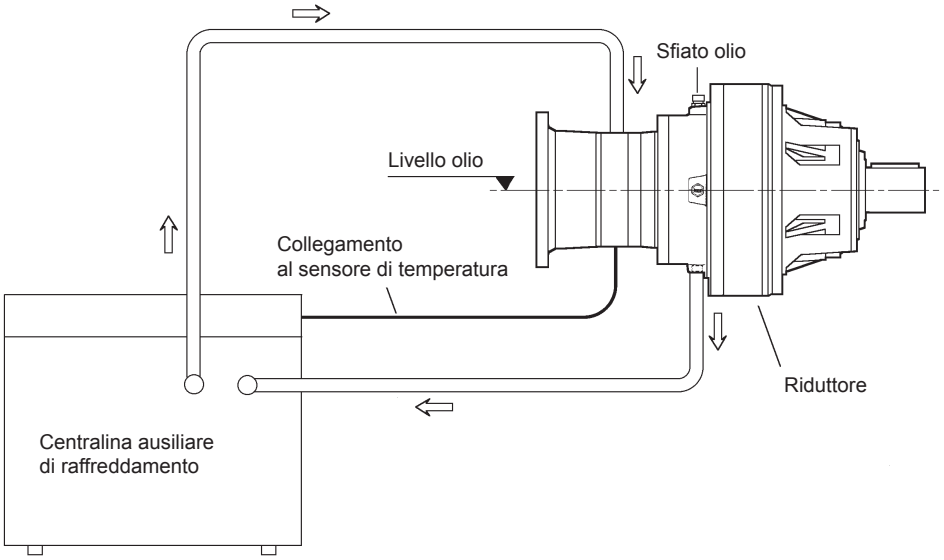

Dati tecnici

(A 9)

		CR1	CR2	CR3
Potenza assorbita	[kW]	0.55	0.75	1.1
Portata pompa	[l/min]	13	22	34
Portata aria	[m³/h]	850	1500	2000
Livello di rumorosità a 1 metro	[dB(A)]	68	70	75
Peso	[kg]	24	36	58

Criteri di scelta

Nota la potenza da trasmettere P e verificato che questa sia superiore alla potenza termica P_t, calcolare la potenza da smaltire P_s con la formula:

$$P_s = 0.1 \times (P - P_t) \quad (26)$$

Selezionare la grandezza della centralina sul diagramma (A10) in funzione della temperatura ambiente t_a (20° - 40°C).
Verificare che la centralina sia installabile sul riduttore selezionato (vedi tabella A11).
In caso contrario, contattare la ns. rete di vendita.

(A 10)

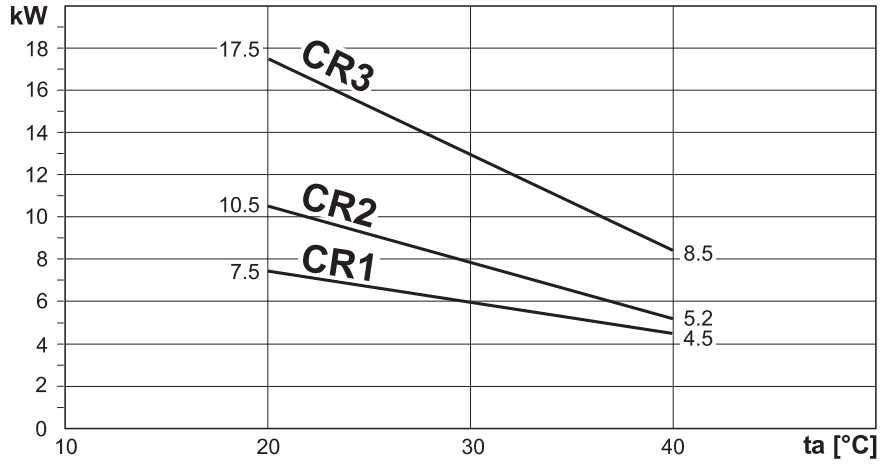

(A 11)

Riduttore	L1	L2	L3	L4	R2	R3	R4
306	CR1	CR1	—	—	—	—	—
307	CR1	CR1	—	—	CR1	—	—
309	CR1	CR1	CR1	—	CR1	—	—
310M	CR2	CR1	CR1	—	—	CR1	—
311M	CR2	CR1	CR1	—	CR1	CR1	—
313M	CR2	CR1	CR1	—	CR1	CR1	—
314M	CR3	CR2	CR1	—	—	CR1	—
315M	CR3	CR2	CR1	—	—	CR1	—
316M	CR3	CR2	CR1	—	—	CR1	—
317M	CR3	CR2	CR2	CR1	—	—	—
318M	CR3	CR2	CR2	CR1	—	—	—
319	CR3	CR2	CR2	CR1	—	—	—
321	CR3	CR2	CR2	CR2	—	—	—

Dimensioni

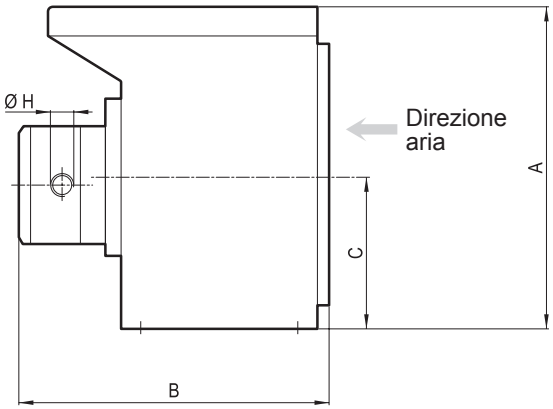

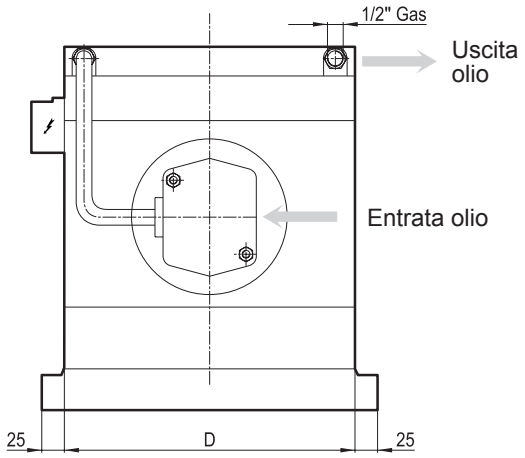

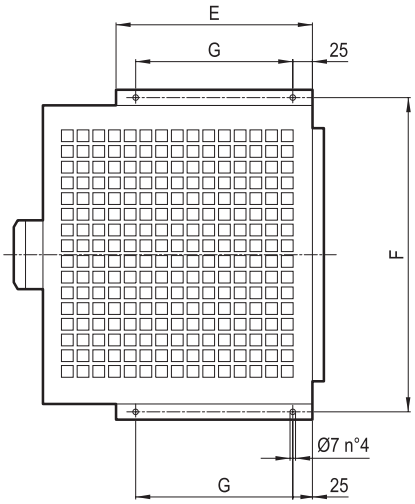

(A 12)

	A	B	C	D	E	F	G	H
CR1	410	395	193	370	250	400	200	1/2" Gas
CR2	450	405	203	470	250	500	200	3/4" Gas
CR3	495	455	225	520	290	550	240	3/4" Gas

c) Coppia massima
Verificare che né la coppia istantanea di picco né la coppia di spunto sotto carico superino il valore di $\mathbf{M_{2max}}$ ammesso per il riduttore (vedi grafico A2).

d) Carichi radiali
In base al tipo di applicazione definire:
- la forza radiale risultante sull'albero in entrata o in uscita, secondo la seguente formula:

$$R_{c1-2} = \frac{2000 \times M_{r1-2} \times K_r}{d} \quad (27)$$

R_{c1-2} = carico radiale [N]
$_1$ = su albero veloce
$_2$ = su albero lento
M_{r1-2} = Coppia all'albero [Nm]
d = Diametro primitivo [mm] dell'organo calettato sull'albero (pignone, ingranaggio, puleggia, ecc.)
K_r =1 pignone per catena
K_r =1,25 ingranaggio
K_r =1,5-2,5 puleggia per cinghia trapezoidale

- Definire la posizione assiale X del carico sull'albero, entrare con tale valore nel diagramma indicante il carico sopportabile dal riduttore R_{x1-2} e verificare sia soddisfatta la seguente relazione:

$$R_{c1-2} \leq Rx_{1-2} \times fh_{1-2} \quad (28)$$

dove fh_{1-2} sono i fattori correttivi carichi radiali e assiali da ricavare in funzione del fattore di durata Fh_1, Fh_2 richiesto (vedere pagine dedicate ai carichi radiali ed assiali ammissibili nel capitolo "Dimensioni").

e) Carichi assiali
Provvedere a verificare il carico assiale, quando presente sull'albero di uscita, in maniera analoga alla verifica relativa al carico radiale.
Deve essere soddisfatta la seguente relazione:

$$\pm A_{c2} \leq \pm A_{n2} \times fh_2 \quad (29)$$

(A 13)

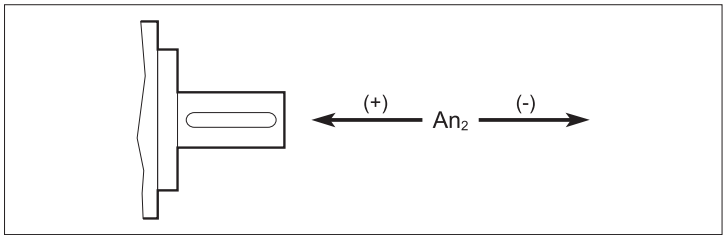

dove fh_2 sono i fattori correttivi carichi radiali e assiali da ricavare in funzione del fattore di durata Fh_2 richiesto (vedere pagine dedicate ai carichi radiali ed assiali ammissibili nel capitolo "Dimensioni").

Quando è presente un carico assiale combinato ad un carico radiale per una opportuna verifica interpellare la nostra Organizzazione di vendita.

f) Esecuzione VK
Determinare:
- Carico radiale $\mathbf{R_{c2}}$
- Carico assiale $\mathbf{A_{c2}}$
- Distanza x del carico $\mathbf{R_{c2}}$

Leggere sul diagramma relativo al riduttore in oggetto, in corrispondenza della distanza X e del rapporto $\mathbf{A_{n2}/R_{n2}}$ più prossimo al valore $\mathbf{A_{c2}/R_{c2}}$, il valore del carico radiale ammissibile $\mathbf{R_{x2}}$.
Deve essere verificato:

$$R_{x2} \geq R_{c2} \quad (30)$$

I valori diagrammati sono validi per:
- velocità n_2 = 10 min^{-1}
- durata teorica 10000 h

Per valori di velocità in uscita n2, o per durate diverse, definire:
- fattore di velocità fn2 secondo la tabella (A14):

(A 14)

n_2	1	2.5	5	10	15	25	50	100
f_{n2}	2.0	1.51	1.23	1.00	0.88	0.76	0.62	0.50

- fattore di durata fL secondo la tabella (A15).

(A 15)

Durata	2500 h	5000 h	10000 h	15000 h	25000 h	50000 h	100000 h	100
f_L	0.66	0.81	1.00	1.13	1.32	1.62	2.00	0.50

Deve essere verificato:

$$R_{x2} \times f_{n2} \geq R_{c2} \times f_L \quad (31)$$

g) Esecuzione FP (FDK e FZP quando e se disponibili)
Nella versione pendolare il montaggio e la motorizzazione del riduttore generano rispettivamente una forza di reazione dovuta all'ancoraggio e una forza derivante dal peso del motore e/o presenza di un tiro dovuto ad altri elementi di collegamento.

La loro combinazione si aggiunge alle normali condizioni di carico andando ad influire su:
• durata dei cuscinetti
• resistenza dell'albero uscita
• condizioni di serraggio delle flangiature

Nel caso in cui sia presente la condizione di carico aggiuntivo (come l'utilizzo di motori di grossa taglia) e/o la scelta di riduttori monostadio (con particolare attenzione alle taglie dal 300 al 307), si consiglia di consultare il Servizio Tecnico Bonfiglioli.
Per quanto riguarda i soli carichi di reazione dovuti all'ancoraggio, nella sezione dimensionale di ogni taglia sono riportate le lunghezze minime dei bracci di reazione (singoli o doppi) che garantiscono le prestazioni dichiarate.

14.6 SCELTA DEL MOTORE

14.6.1 Motore elettrico (vedi sezione M di questo catalogo)

a) Dalla coppia M_{r2}, conoscendo η_2 e il rendimento dinamico η_d, ricavare la potenza in entrata:

$$P_{r1} = \frac{M_{r2} \times n_2}{9550 \times \eta_d} \quad [kW] \qquad (32)$$

La tabella (A3) riporta i valori di rendimento ηd relativi ai vari stadi di riduzione dei riduttori della serie 300M.

b) Selezionare nelle tabelle dati tecnici motori una grandezza con potenza nominale tale da soddisfare:

$$P_{r1} \leq P_n \qquad (33)$$

Preferibilmente scegliere motori a 4 poli o superiori.

Se non diversamente indicato, la potenza P_n dei motori riportata a catalogo si riferisce al servizio continuo S1. Per i motori utilizzati in condizioni diverse da S1, sarà necessario identificare il tipo servizio previsto con riferimento alle Norme CEI 2-3/IEC 34-1. In particolare, per i servizi da S2 a S8 e per le grandezze motore uguali o inferiori a 132, è possibile ottenere una maggiorazione della potenza rispetto a quella prevista per il servizio continuo, pertanto la condizione da soddisfare sarà:

$$\frac{P_{r1}}{f_m} \leq P_n \qquad (34)$$

Il fattore di maggiorazione f_m è ricavabile dalla tabella (A5).

Per servizi diversi da S1, con un numero rilevante di inserzioni/ora si dovrà tener conto di un fattore Z (determinabile con le indicazioni riportate nel capitolo dei motori) il quale definisce il numero massimo di avviamenti specifico per l'applicazione in oggetto.

14.6.2 Motore idraulico (vedi sezione H di questo catalogo)

In funzione dell'applicazione definire il tipo di motore idraulico scegliendolo dalla tabella (A16) di primo orientamento.

(A 16)

Tipo d'impiego	Leggero		Medio		Pesante	
Pressione p [bar]	<175		175 - 200		200 - 450	
Costruzione motori	orbitali 	a ingranaggi 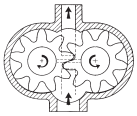	a pistoni radiali 	a pistoni assiali 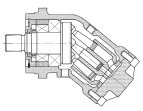	a camme 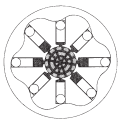	a pistoni assiali 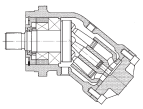
Velocità	media ≤ 700	alta ≤ 3000	media ≤ 500	alta ≤ 4000	bassa ≤ 200	media ≤ 4000
ηmh	0.80	0.85	0.95	0.93	0.93	0.93
ηv	0.90	0.87	0.95	0.95	0.95	0.95

Con i dati caratteristici di ingresso del riduttore:

- coppia in entrata M_{r1} [Nm]
- velocità in entrata n_1 [min^{-1}]

e con la pressione p [bar] ammessa dal circuito idraulico determinare la cilindrata del motore idraulico con la seguente formula:

$$V_c = \frac{20 \times \pi \times M_{r1}}{p \times \eta mh} \; [cm^3] \qquad (35)$$

dove ηmh è il rendimento meccanico idraulico del motore (tab. A16).

Selezionare una grandezza di motore che abbia una cilindrata V tale che:

$$V_c \leq V \qquad (36)$$

Calcolare la portata necessaria per alimentare il motore idraulico

$$Q_1 = \frac{V \times n_1}{\eta_v \times 1000} \; [l/min] \qquad (37)$$

dove η_v è il rendimento volumetrico.
Per motori idraulici orbitali di produzione BONFIGLIOLI TRASMITAL consultare la sezione H di questo catalogo. Per altri tipi di motori idraulici consultare le loro relative documentazioni tecniche.

15 INSTALLAZIONE

È molto importante per l'affidabilità e il buon funzionamento del riduttore rispettare alcune norme per la sua corretta installazione.
Le norme qui riportate hanno valore per una prima indicazione per la installazione del riduttore.
Per provvedere ad una effettiva e corretta installazione attenersi al Manuale di installazione uso e manutenzione dei riduttori fornibile dalla nostra Organizzazione di Vendita.
Riportiamo in breve le norme da seguire:

a) Fissaggio:
– Appoggiare il riduttore a una struttura sufficientemente rigida, con superfici di accoppiamento piane e lavorate di macchina utensile.

– Le superfici di accoppiamento, specialmente per riduttori montati con flangia e con alberi in uscita femmina scanalati, devono risultare entro precise tolleranze geometriche (riferirsi al Manuale Uso e Manutenzione disponibilie su www.bonfiglioli.com).

– Per alcune grandezze di riduttori, in applicazioni con elevati carichi radiali in uscita, è raccomandato il montaggio a flangia eseguito per utilizzare i doppi diametri di centraggio di cui tali riduttori sono provvisti (riferirsi al Manuale Uso e Manutenzione disponibilie su www.bonfiglioli.com).

– Verificare che il riduttore sia previsto per la posizione di montaggio richiesta.

– Fissare il riduttore con viti di classe indicata nel Manuale Uso e Manutenzione (disponibile su www.bonfiglioli.com) e serrandole ai valori di coppia indicati nelle relative tabelle.

b) Collegamenti
– Fissare gli organi di collegamento in entrata ed uscita al riduttore evitando di battere con martello o equivalenti. Utilizzare per l'inserimento degli organi le viti di servizio e i fori filettati presenti negli alberi. Prima di montare gli organi di collegamento avere cura di pulire gli alberi eliminando grassi o protettivi eventualmente presenti.

– Versi di rotazione.
Nell'effettuare il cablaggio del motore, tenere presente che i riduttori hanno i versi di rotazione entrata/uscita, come indicato nella tabella seguente:

(A 17)

In linea	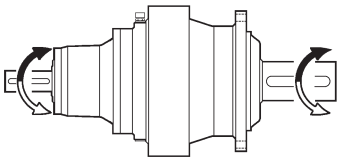	Combinato con riduttori a vite senza fine	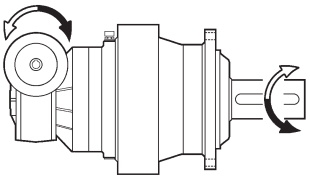
Angolare	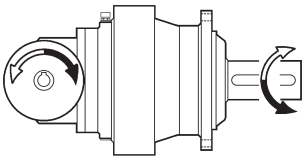	Combinato con riduttori ad assi ortogonali	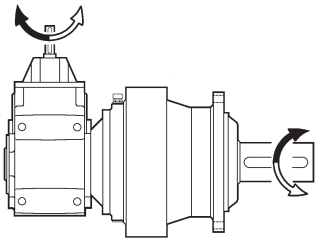

RA/RO: Per le applicazioni monodirezionali o per le applicazioni che richiedono un senso di rotazione prevalente su quello ad esso opposto, la scelta dell'opzione "**RA/RO**" garantisce le prestazioni dichiarate.
Per le applicazioni che non richiedono un senso di rotazione prevalente rispetto all'altro, le prestazioni sono garantite indipendentemente dall'opzione "**RA/RO**" scelta.

c) Verniciatura
– Utilizzare vernici compatibili con la vernice di fondo presente sui riduttori, vedi paragrafo "Condizioni di fornitura".
Durante la verniciatura proteggere gli anelli di tenuta presente sugli alberi. La vernice li può fare essiccare causando perdite d'olio.

d) Lubrificazione
– Prima della messa in servizio riempire il riduttore di lubrificante (riferirsi al Manuale Uso e Manutenzione disponibilie su www.bonfiglioli.com) fino al raggiungimento del livello riscontrabile dall'apposito tappo di servizio di cui ogni riduttore è provvisto in funzione della posizione di montaggio specificata in fase di ordine.

NOTA: nei riduttori combinati la lubrificazione degli stadi epicicloidali è separata da quella dei riduttori a vite senza fine (serie 3/V_M), o ortogonali (serie 3/A).
I riduttori forniti con lubrificazione permanente ad olio sintetico non necessitano delle operazioni sopra descritte.

16 LUBRIFICAZIONE

Si consiglia di consultare il Manuale d'Uso e Manutenzione disponibile al sito www.bonfiglioli.com per le indicazioni sui controlli periodici del livello dell'olio e sulla sua sostituzione.
Evitare di miscelare oli a base minerale con oli sintetici e/o marche differenti.
È buona norma comunque controllare il livello una volta al mese per funzionamento intermittente, o più frequentemente, per funzionamento in continuo, e aggiungere olio se necessario.

16.1 Scelta della viscosità ottimale dell'olio (dati riferiti ad oli Shell)

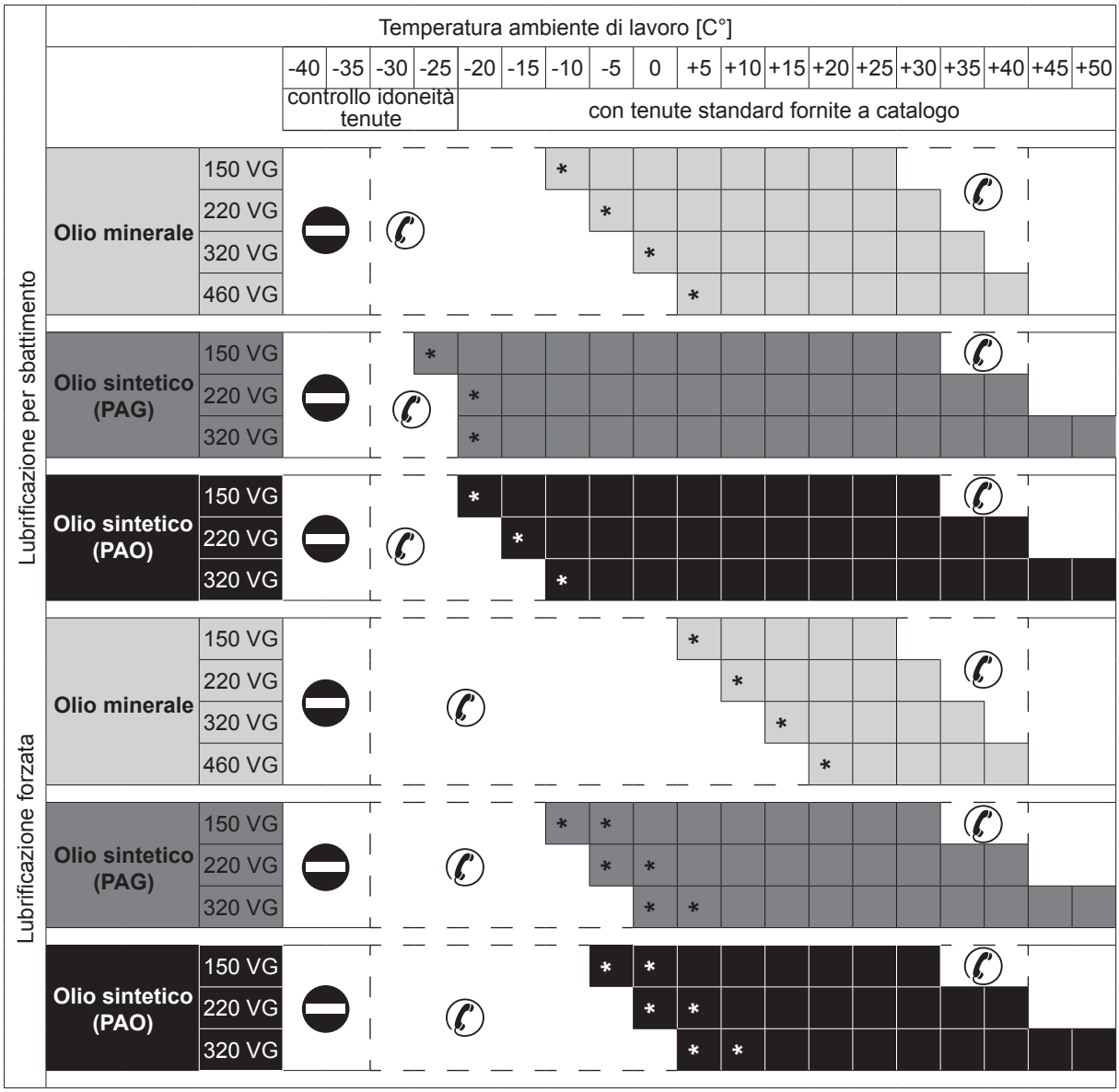

Limiti di impiego consigliati.

Limiti di impiego consentiti.

Limiti di impiego non consentiti.

* = Si suggerisce un avviamento graduale e prevedere un maggior assorbimento del motore.
Se necessario e/o nel caso di carichi impulsivi, contattare il Servizio Tecnico Bonfiglioli

16.2 Lubrificazione per riduttori Serie 300M

Tutti i riduttori prevedono una lubrificazione a bagno d'olio. Nelle posizioni di montaggio che prevedono i riduttori con un asse verticale, dove lo sbattimento dell'olio durante il funzionamento non sarebbe sufficiente a garantire la corretta lubrificazione dei cuscinetti superiori, vengono adottati adeguati sistemi di lubrificazione.

Prima della messa in opera immettere la giusta quantità di lubrificante del tipo raccomandato. A tal proposito i riduttori sono muniti dei tappi di carico, livello e scarico olio.
Al fine di predisporre il corretto orientamento dei tappi, per una adeguata lubrificazione, di precisare sempre la posizione di montaggio desiderata.
Per le tavole di riferimento della collocazione dei tappi di servizio e delle quantità di lubrificante, riferirsi al Manuale Uso e Manutenzione (disponibilie su www.bonfiglioli.com).

– Per funzionamenti particolari dove sono richiesti speciali requisiti, interpellare il nostro Servizio Tecnico.

– Se non diversamente concordato, i riduttori sono forniti privi di lubrificante. Fanno eccezione i riduttori combinati (3/V_M e 3/A) nei quali il riduttore a vite, o ad assi ortogonali, può essere fornito con lubrificazione permanente a base di olio sintetico come indicato sul Manuale di Uso e Manutenzione (disponibile su www.bonfiglioli.com).

– Le quantità d'olio indicate per i vari tipi di riduttori sono indicative, il riempimento deve considerarsi corretto quando il lubrificante raggiunge il tappo di livello, collocato in fabbrica in funzione della posizione di montaggio.

– nel caso in cui la potenza trasmessa superi quella termica, occorrerà provvedere ad una circolazione forzata dell'olio (vedi: Sistemi ausiliari di raffreddamento).

NOTA: nei riduttori di tipo combinato la lubrificazione degli stadi epicicloidali è separata da quella dei riduttori a vite senza fine (3/V_M), o ortogonali (3/A).

16.3 Lubrificazione freni

I freni idraulici a dischi multipli hanno lubrificazione unica con il riduttore.

17 STOCCAGGIO

Il corretto stoccaggio dei prodotti richiede l'esecuzione delle seguenti attività:

a) Escludere aree all'aperto, zone esposte alle intemperie o con eccessiva umidità.

b) Interporre sempre tra il pavimento ed i prodotti, pianali lignei o di altra natura, atti ad impedire il diretto contatto col suolo.

c) Per periodi di stoccaggio superiori ai 60 giorni, le superfici interessate agli accoppiamenti quali flange, alberi e giunti, devono essere protette con idoneo prodotto antiossidante.

d) Per periodi di stoccaggio previsti superiori ai 6 mesi, i prodotti devono essere oggetto delle seguenti attività:
- Ricoprire tutte le parti lavorate esterne con grasso atto ad evitare ossidazioni.
- Posizionare i riduttori con il tappo di sfiato nella posizione più alta e riempirli di olio, ad eccezione di quelli dotati in fabbrica di lubrificazione permanente. I riduttori, prima del loro utilizzo, dovranno essere ripristinati con la corretta quantità e tipo di lubrificante previsto.

18 CONDIZIONI DI FORNITURA

I riduttori vengono forniti come segue:

a) predisposti per l'installazione nella posizione di montaggio specificata nell'ordinativo;

b) senza olio lubrificante ed internamente protetti con un film d'olio usato per il collaudo finale;

c) laddove non viene richiesta una classe di protezione specifica, i prodotti rispettano come requisito minimo la classe di protezione C2 (UNI EN ISO 12944-2) e vengono forniti con vernice di fondo antiossidante all'acqua di colore grigio Ral 7042. Le superfici di accoppiamento non sono verniciate;

d) collaudati secondo specifiche interne;

e) appositamente imballati;

f) provvisti di dadi e bulloni per montaggio motori elettrici versione IEC o motori idraulici;

g) dotati di carica di lubrificante per i tipi a lubrificazione permanente.

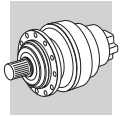

19 DESIGNAZIONE RIDUTTORE 300M

3 11M L 2 16.7 HZ

VERSIONE USCITA

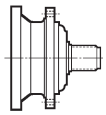

MZ: Albero maschio scanalato

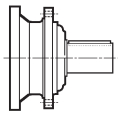

MC: Albero maschio cilindrico

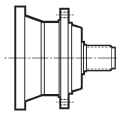

HZ: Albero maschio rinforzato scanalato

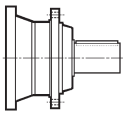

HC: Albero maschio rinforzato cilindrico

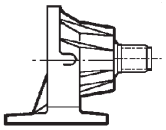

PZ: Uscita con albero scanalato e piedi di supporto

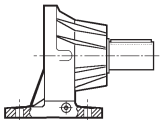

PC: Uscita con albero cilindrico e piedi di supporto

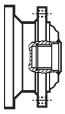

FZ / FZB: Albero femmina scanalato

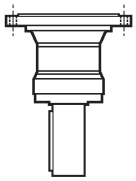

VK: Albero cilindrico rinforzato per agitatori e mescolatori

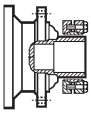

FP: Albero femmina per giunto d'attrito

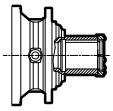

FDK: Albero femmina con doppia sede per linguetta

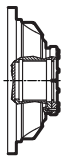

FZP: Albero femmina scanalato con dispositivo di bloccaggio assiale (raccomandato per installazioni pendolari)

RAPPORTO DI RIDUZIONE

Indicare il valore del rapporto (compresi punto e decimali) riportato su pagine dati tecnici

Es. : 1/5.33 = 5.33 1/44.6 = 44.6 1/131 = 131

NUMERO STADI DI RIDUZIONE

1, 2, 3, 4

ESECUZIONE

L = Lineare

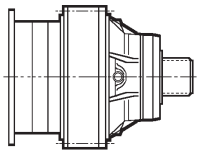

R = Angolare

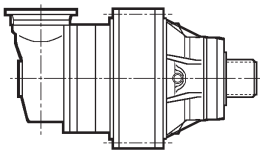

GRANDEZZA RIDUTTORE

00 = 300	246	**05** = 305	290	**10M** = 310M	338	**15M** = 315M	386	**19** = 319	428
01 = 301	256	**06** = 306	302	**11M** = 311M	350	**16M** = 316M	398	**21** = 321	438
03 = 303	266	**07** = 307	314	**13M** = 313M	362	**17M** = 317M	408	**23** = 323	448
04 = 304	278	**09** = 309	326	**14M** = 314M	374	**18M** = 318M	418	**25** = 325	452

SERIE

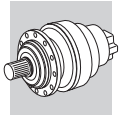

6A S5EC A A W0A ... ...

OPZIONI
GUARNIZIONI
STANDARD = NBR
PV = Fluoro-elastomero
(⊖ ingressi idraulici
BONFIGLIOLI TECHNICAL SERVICE)

SOLO PER ESECUZIONE ANGOLARE
senso di rotazione in ingresso preferenziale

RA = Sinistro
RO = Destro

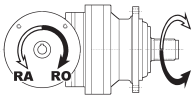

25

PROTEZIONE SUPERFICIALE
C2 (default), **C3, C4**
37

VERNICIATURA
RAL7042 (default), **RAL5010, RAL9005, RAL9006, RAL9010**
37

PROVE DOCUMENTALI
AC, CC
38

CENTRALINA AUSILIARE DI RAFFREDDAMENTO
CR1, CR2, CR3
19

ACCESSORI IN USCITA

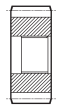
P... = Pignoni


B0A = Barra scanalata


M0A = Manicotto liscio


G0A = Giunto ad attrito

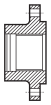
W0A = Flangia

ORIENTAMENTO FLANGIA MOTORE
461

POSIZIONE DI MONTAGGIO
38

ENTRATA


Senza predisposizione motore

V9AA	**V9AC**	**V9AE**	**V9AG**	**V9AL**
V9AB	**V9AD**	**V9AF**	**V9AH**	

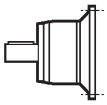
Albero veloce

	V01A	**V01B**	**V05B**	**V06B**	**V07A**	**V07B**	**V10B**	**V11B**	**V15B**
diam.	Ø24	Ø38	Ø48	Ø60	Ø60	Ø80	Ø80	Ø80	Ø120

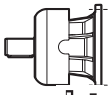
Albero veloce con ventola

	FV05B	**FV06B**	**FV07A**	**FV07B**	**FV10B**	**FV11B**
diam.	Ø48	Ø60	Ø60	Ø80	Ø80	Ø80

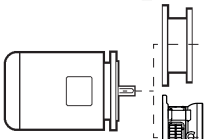
Predisposizione motore elettrico
P+IEC (P71...P250)

Predisposizione motore elettrico con ventola integrata

PF160	**PF180**	**PF200**	**PF225**	**PF250**

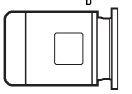
Motoriduttore integrato completo di motore elettrico compatto (disponibile fino alla grandezza 307) **S2, S3, S4**

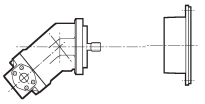
Predisposizione motore idraulico **S5AP, COAA, HOBA, ...**
(⊖ opzione PV BONFIGLIOLI TECHNICAL SERVICE)
461


Motoriduttore con motore idraulico integrato orbitale MG
(⊖ opzione PV BONFIGLIOLI TECHNICAL SERVICE)
471

SOLO CON IN ENTRATA MOTORE IDRAULICO

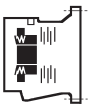

Freno idraulico negativo a dischi multipli standard

6 = Grandezza : **4, 5, 6**
A = Coppia frenante : **A, B, C, ...**
460

Freno idraulico negativo a dischi multipli per motore orbitale
SF = Senza freno
477

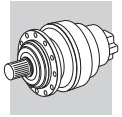

20 DESIGNAZIONE RIDUTTORE 3/V

3/V 10M L 3 623 PC

VERSIONE USCITA

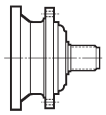

MZ: Albero maschio scanalato

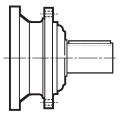

MC: Albero maschio cilindrico

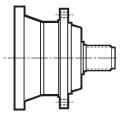

HZ: Albero maschio rinforzato scanalato

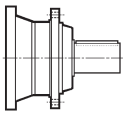

HC: Albero maschio rinforzato cilindrico

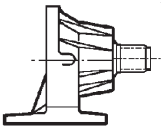

PZ: Uscita con albero scanalato e piedi di supporto

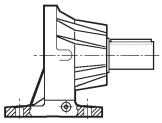

PC: Uscita con albero cilindrico e piedi di supporto

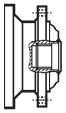

FZ / FZB: Albero femmina scanalato

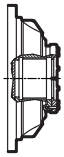

FZP: Albero femmina scanalato con dispositivo di bloccaggio assiale (raccomandato per installazioni pendolari)

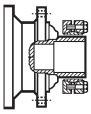

FP: Albero femmina per giunto d'attrito

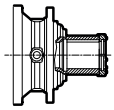

FDK: Albero femmina con doppia sede per linguetta

RAPPORTO DI RIDUZIONE
Indicare il valore del rapporto riportato su pagine dati tecnici
Es. : 1/773 = 773

NUMERO STADI DI RIDUZIONE
3, 4

ESECUZIONE
L = Combinato serie 300M,
2 o 3 stadi epicicloidali + vite senza fine

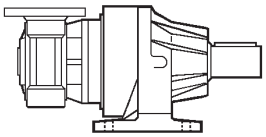

GRANDEZZA RIDUTTORE

00 = 3/V 00	250	**05** = 3/V 05	294	**10M** = 3/V 10M	342	**15M** = 3/V 15M	390	**19** = 3/V 19	432
01 = 3/V 01	260	**06** = 3/V 06	306	**11M** = 3/V 11M	354	**16M** = 3/V 16M	402	**21** = 3/V 21	442
03 = 3/V 03	270	**07** = 3/V 07	318	**13M** = 3/V 13M	366	**17M** = 3/V 17M	412		
04 = 3/V 04	282	**09** = 3/V 09	330	**14M** = 3/V 14M	378	**18M** = 3/V 18M	422		

SERIE
Riduttori combinati serie 300M / riduttori a vite senza fine

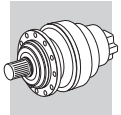

P80 B5 AF W0A ...

OPZIONI

GUARNIZIONI
STANDARD = NBR
PV = Fluoro-elastomero

PROTEZIONE SUPERFICIALE
C2 (default)**, C3, C4**
37

VERNICIATURA
RAL7042 (default)**, RAL5010, RAL9005, RAL9006, RAL9010**
37

PROVE DOCUMENTALI
AC, CC
38

ACCESSORI IN USCITA

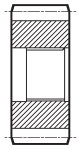

P... = Pignoni

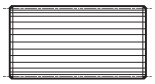

B0A = Barra scanalata

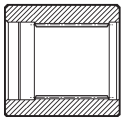

M0A = Manicotto liscio

G0A = Giunto ad attrito

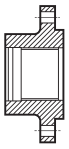

W0A = Flangia

POSIZIONE DI MONTAGGIO
38

FORMA COSTRUTTIVA
B5, B14

ENTRATA

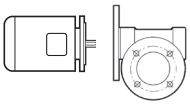

Predisposizione motore elettrico — **P+IEC** (P63...P180)

Albero veloce **HS**

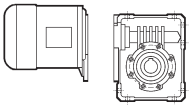

Motoriduttore integrato completo di motore elettrico compatto — **S1, S2, S3**

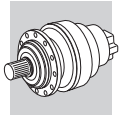

21 DESIGNAZIONE RIDUTTORE 3/A

3/A 06 L 2 69.9 PC

VERSIONE USCITA

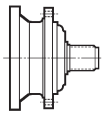

MZ: Albero maschio scanalato

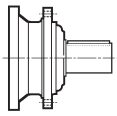

MC: Albero maschio cilindrico

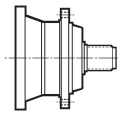

HZ: Albero maschio rinforzato scanalato

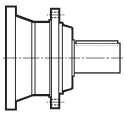

HC: Albero maschio rinforzato cilindrico

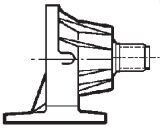

PZ: Uscita con albero scanalato e piedi di supporto

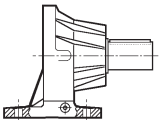

PC: Uscita con albero cilindrico e piedi di supporto

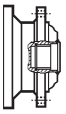

FZ / FZB: Albero femmina scanalato

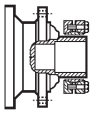

FP: Albero femmina per giunto d'attrito

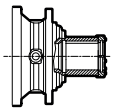

FDK: Albero femmina con doppia sede per linguetta

RAPPORTO DI RIDUZIONE
Indicare il valore del rapporto riportato su pagine dati tecnici
Es. : 1/19.4 = 19.4 1/175 = 175

NUMERO UNITÀ DI RIDUZIONE
2

ESECUZIONE
L = Combinato serie 300, 1 stadio epicicloidale + riduttore ad assi ortogonali serie A

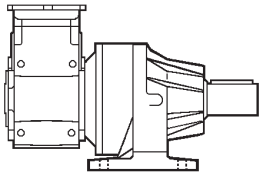

GRANDEZZA RIDUTTORE

00 = 3/A 00 (300+A10)	251	**05 =** 3/A 05 (305+A41**)**	295
01 = 3/A 01 (301+A20)	261	**06 =** 3/A 06 (306+A50)	307
03 = 3/A 03 (303+A30)	271	**07 =** 3/A 07 (307+A60)	319
04 = 3/A 04 (304+A41)	283		

SERIE
Riduttori combinati serie 300 / riduttori ad assi ortogonali serie A

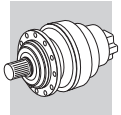

S4 EF W0A ...

OPZIONI

GUARNIZIONI
STANDARD = NBR
PV = Fluoro-elastomero

PROTEZIONE SUPERFICIALE
C2 (default)**, C3, C4**

37

VERNICIATURA
RAL7042 (default)**, RAL5010, RAL9005, RAL9006, RAL9010**

37

PROVE DOCUMENTALI
AC, CC

38

ACCESSORI IN USCITA

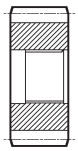

P... = Pignoni

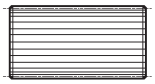

B0A = Barra scanalata

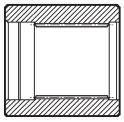

M0A = Manicotto liscio

G0A = Giunto ad attrito

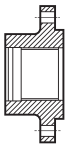

W0A = Flangia

POSIZIONE DI MONTAGGIO

38

ENTRATA

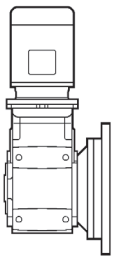

Motoriduttore integrato completo di motore elettrico compatto **S2, S3, S4**

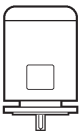

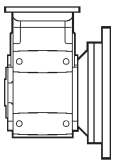

Predisposizione motore elettrico **P+IEC** (P63...P180)

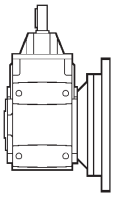

Albero veloce **HS**

22 DESIGNAZIONE MOTORE

MOTORE | FRENO

M 1LA 4 230/400-50 IP54 CLF ... **W** | **FD** 7.5 R SB 220 SA ...

OPZIONI

ALIMENTAZIONE FRENO

TIPO ALIMENTATORE
NB, SB, NBR, SBR

LEVA DI SBLOCCO FRENO
R, RM

COPPIA FRENANTE

TIPO FRENO
FD (freno c.c)
FA (freno c.a.)

POSIZIONE MORSETTIERA
W (default)**, N, E, S**

FORMA COSTRUTTIVA
— (motore integrato)
B5 (motore IEC)

CLASSE ISOLAMENTO
CL F standard
CL H option

GRADO DI PROTEZIONE
IP55 standard (IP54 - autofrenante)

TENSIONE - FREQUENZA

NUMERO DI POLI
4, 6, 2/4, 2/6, 2/8, 2/12

GRANDEZZA MOTORE
1SD - 5LA (motore integrato)
63A - 250M (motore IEC)

TIPO MOTORE
M = trifase integrato
BN = trifase IEC

23 OPZIONI AGGIUNTIVE

23.1 PROTEZIONE SUPERFICIALE

I riduttori, che laddove non viene richiesta una classe di protezione specifica rispettano come requisito minimo la classe di protezione C2 (UNI EN ISO 12944-2), possono essere forniti con protezione superficiale C3 e C4 per una migliore resistenza alla corrosione atmosferica, ottenute mediante verniciatura del gruppo completo.

PROTEZIONE SUPERFICIALE	Ambienti tipici	Temperatura superficiale max.	Classe di corrosività secondo UNI EN ISO 12944-2
C3	Ambienti urbani ed industriali, con umidità relativa dell'aria max.100% (inquinamento ambientale medio)	120°C	C3
C4	Aree industriali, zone costiere, impianti chimici, con umidità relativa dell'aria max.100% (inquinamento ambientale alto)	120°C	C4

I riduttori previsti con le protezioni opzionali C3 e C4 sono disponibili in diversi colori.
Se non specificato nessun colore (vedere opzione "VERNICIATURA") la fornitura viene eseguita con il colore RAL7042.
A richiesta sono fornibili riduttori per classe di corrosività C5 secondo UNI EN ISO 12944-2, contattando il ns. Servizio Tecnico-Commerciale.

23.2 VERNICIATURA

I riduttori previsti con le protezioni opzionali C3 e C4 sono disponibili in diversi colori, secondo la tabella seguente.

VERNICIATURA	Colore	Catalogazione RAL
RAL7042*	Grigio traffico A	7042
RAL5010	Blu genziana	5010
RAL9005	Nero intenso	9005
RAL9006	Alluminio brillante	9006
RAL9010	Bianco puro	9010

* Colore di fornitura standard se non specificato diversamente

NOTA - L'opzione "VERNICIATURA" è configurabile esclusivamente in abbinamento con l'opzione "PROTEZIONE SUPERFICIALE".

23.3 PROVE DOCUMENTALI

AC - Attestato di conformità
Documento il cui rilascio attesta la conformità del prodotto all'ordinativo e la costruzione dello stesso in conformità alle procedure standard di processo e di controllo previste dal sistema di Qualità Bonfiglioli Riduttori.

CC - Certificato di collaudo
La specifica comporta la conduzione di verifiche di conformità all'ordine, controlli visivi generali e verifiche strumentali delle dimensioni di accoppiamento. Sono inoltre condotti controlli generali di funzionamento a vuoto e verifiche della funzionalità delle guarnizioni di tenuta in modalità statica e in funzionamento. Il collaudo si applica ad un campione statistico del lotto di spedizione.

23.4 TENUTE TIPO TACONITE

In ambienti caratterizzati da presenza di polveri abrasive sono consigliate tenute tipo Taconite costituite da una combinazione di anelli di tenuta, labirinti e camera a grasso. L'opzione è disponibile per le versioni **FP** e **FZ** dalla taglia 314M alla 325.
Per ulteriori informazioni si prega di contattare il ns. Servizio Servizio Tecnico-Commerciale.

24 POSIZIONI DI MONTAGGIO

Per la completa definizione della configurazione del riduttore, è necessario specificare la posizione di montaggio rispetto al suolo. Riferirsi per questo alla tabella (A18) per i riduttori in linea e alla (A19) per i riduttori con riduzione angolare.

24.1 Riduttori in linea

(A 18)

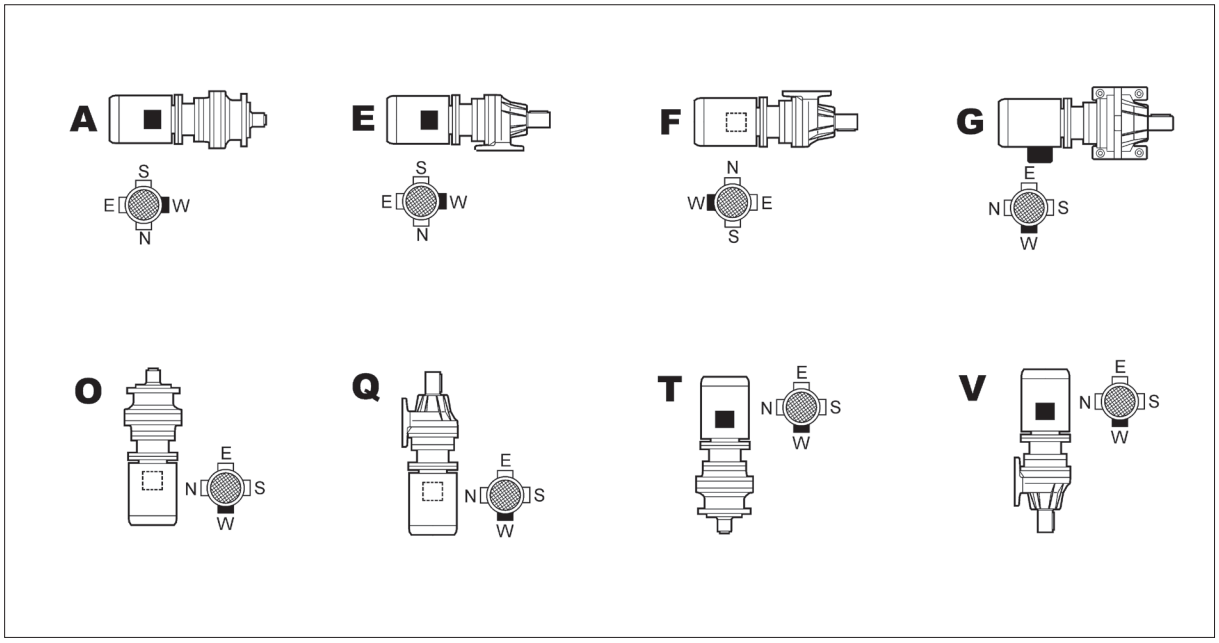

24.2 Riduttori angolari

(A 19)

B0 - B1 - B2 - B3

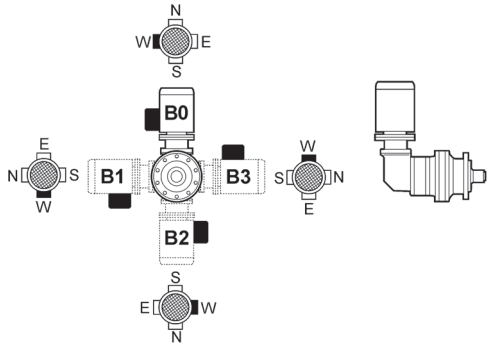

I0 - I1 - I2 - I3

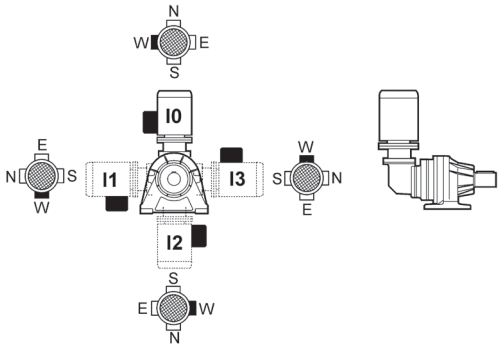

J0 - J1 - J2 - J3

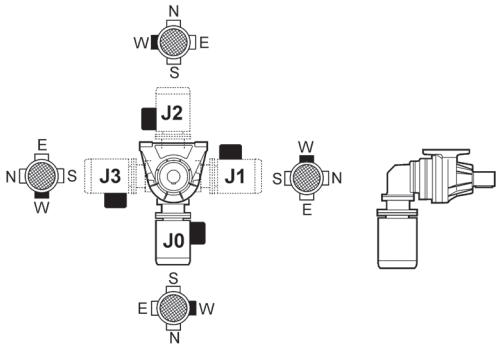

M0 - M1 - M2 - M3

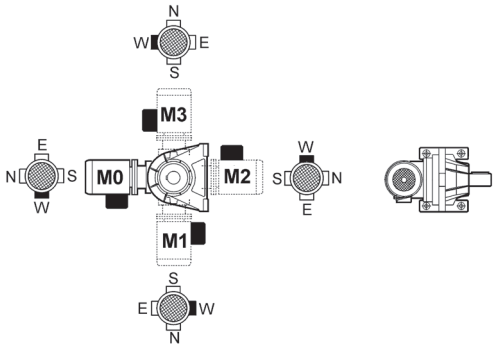

P0 - P1 - P2 - P3

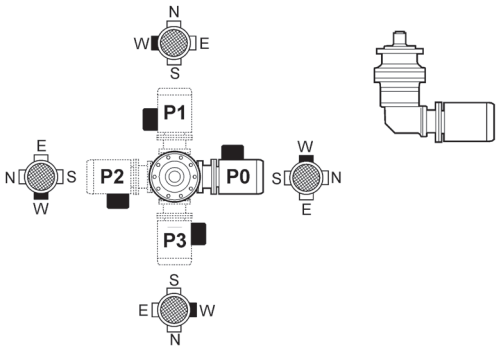

R0 - R1 - R2 - R3

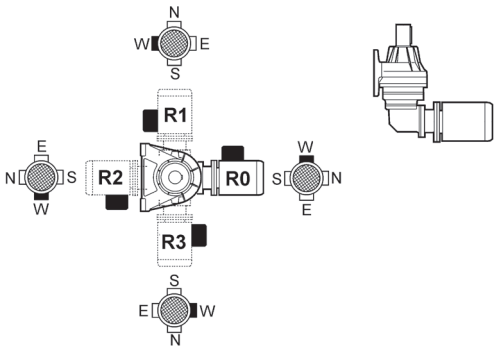

U0 - U1 - U2 - U3

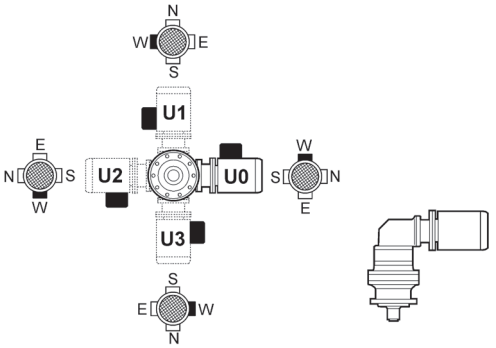

W0 - W1 - W2 - W3

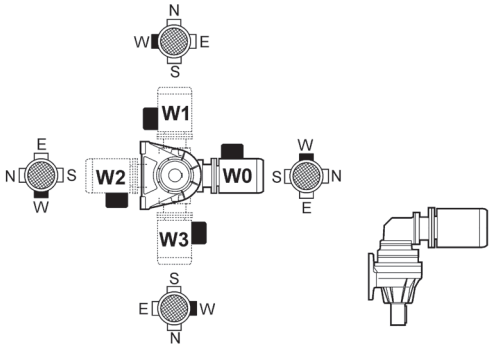

24.3 Serie 3/V

(A 20)

AA - AE - AF - AD

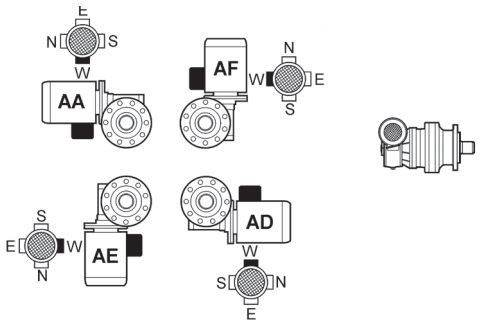

EA - EE - EF - ED

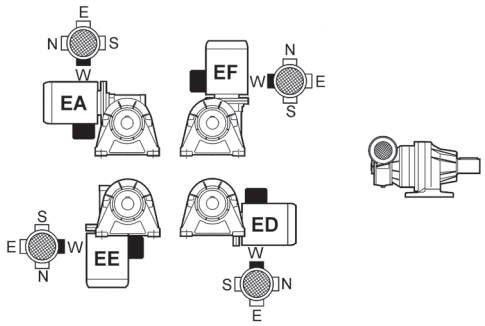

TA - TE - TF - TD

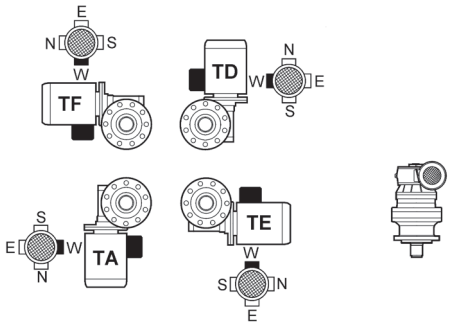

VA - VE - VF - VD

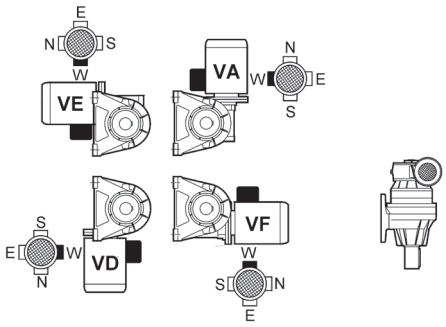

OA - OE - OF - OD

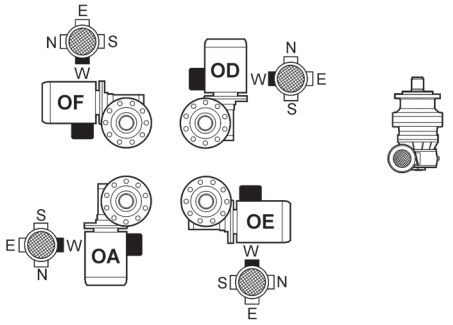

QA - QE - QF - QD

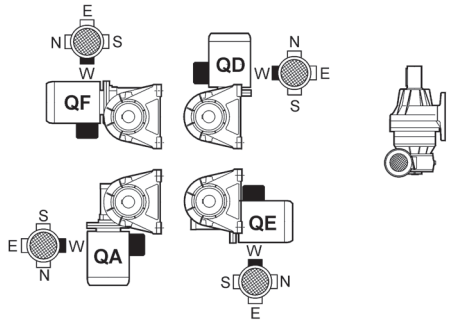

FA - FE - FF - FD

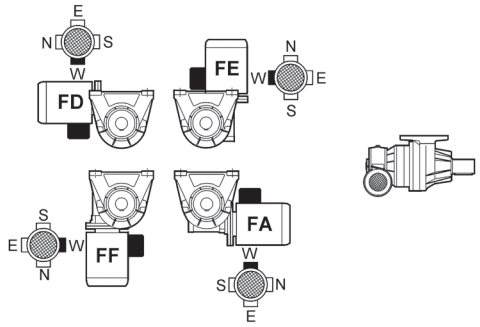

24.4 Serie 3/A

(A 21)

AA - AE - AF - AD

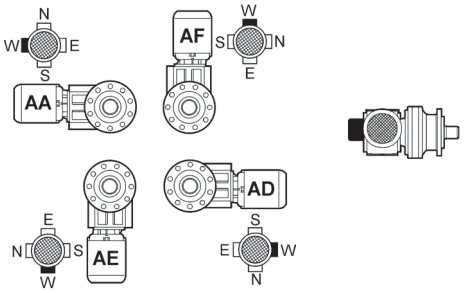

EA - EE - EF - ED

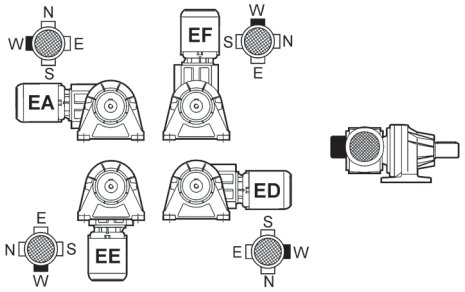

TA - TE - TF - TD

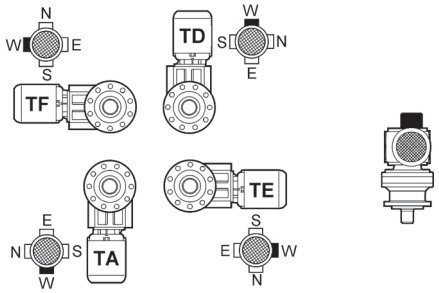

VA - VE - VF - VD

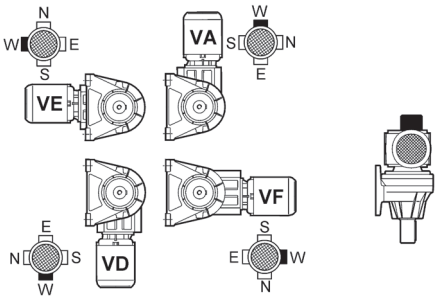

OA - OE - OF - OD

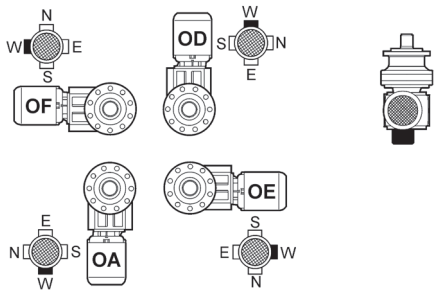

QA - QE - QF - QD

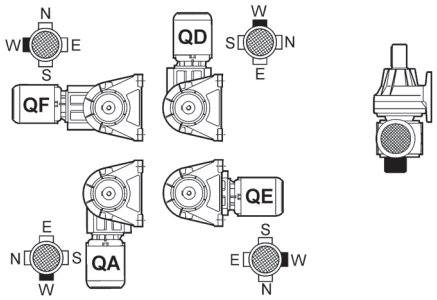

FA - FE - FF - FD

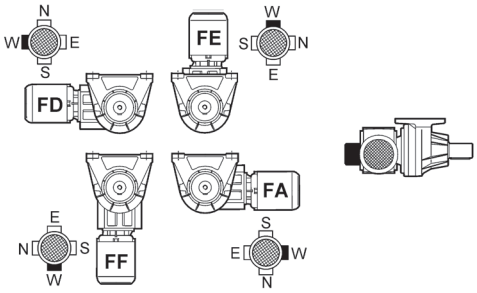

25 DATI TECNICI

A SELEZIONE MOTORIDUTTORE PER POTENZA

B SELEZIONE RIDUTTORE PER COPPIA DELL'APPLICAZIONE

C SELEZIONE RIDUTTORE PER NUMERO DI CICLI DI FUNZIONAMENTO

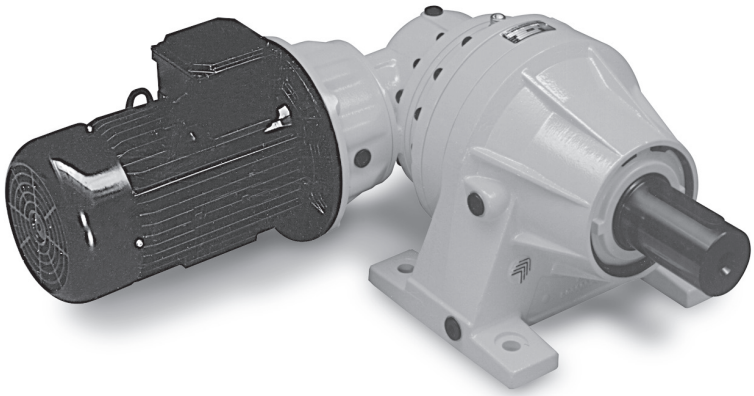

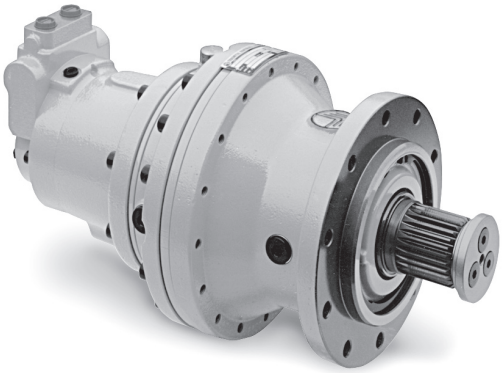

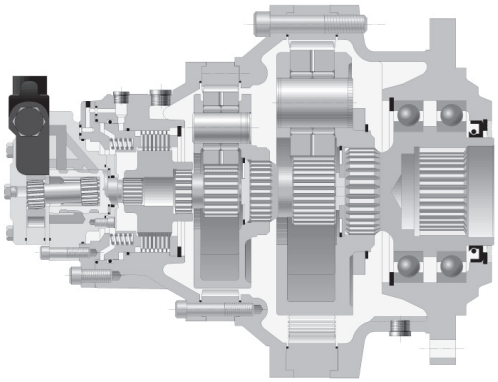

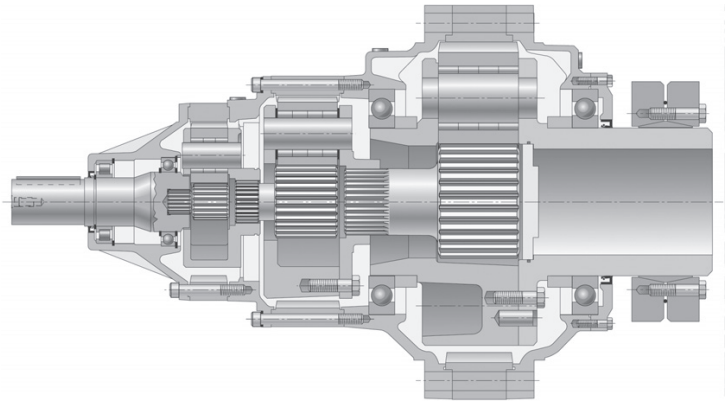

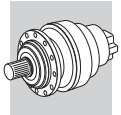

25.1 DATI TECNICI MOTORIDUTTORI 300M L - 300M R

Guida alla consultazione delle tabelle.

1

P_1 = 30 kW

n_2 min^{-1}	M_{n2} Nm	f_S	i	P_t kW					Rn_2 [N] MC	MZ	HC/PC	HZ/PZ	FZ	
1.1	239700	1.4	1389	30.0	**319L4**	**—**	**BN200L4**	**—**	—	—	453500	499300	196200	428
1.2	206200	1.7	1195	30.0	**319L4**	**—**	**BN200L4**	**—**	—	—	443900	488700	186600	428
1.3	193600	2.7	1122	35	**321L4**	**—**	**BN200L4**	**—**	—	—	622200	740600	1106400	438
1.4	178200	1.0	1032	18.0	**317ML4**	**—**	**BN200L4**	**—**	—	—	376100	399500	133300	408
1.4	182800	1.4	1059	22.0	**318ML4**	**—**	**BN200L4**	**—**	—	—	359100	405400	179300	418

2 3 4 5 6 7 8 9 10 11 12

Valori di potenza termica inferiori alla potenza meccanica applicata

1	Potenza del motore elettrico abbinato al riduttore
2	Velocità angolare all'albero lento
3	Coppia nominale all'albero lento del riduttore basata su: - fattore di servizio indicato - durata teorica di 10000 h
4	Fattore di servizio
5	Rapporto di riduzione
6	Potenza termica riduttore
7	Grandezza riduttore in esecuzione lineare
8	Grandezza riduttore in esecuzione angolare NOTA: i suffissi (B) (C) sulla stessa grandezza indicano riduzioni angolari di dimensioni differenti: vedere le pagine dimensionali
9	Grandezza motore IEC e polarità
10	Grandezza motore compatto e polarità
11	Carico radiale applicabile sull'albero lento, calcolato per: - fattore di servizio f_S=1 - durata teorica di 10000 h - velocità uscita n_2 Per forze non agenti in mezzeria riferirsi ai diagrammi riportati a seguito delle pagine dimensionali del riduttore in oggetto
12	Pagina delle dimensioni. Le dimensioni dei motoriduttori si riferiscono ad abbinamenti con motori di produzione BONFIGLIOLI

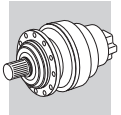

A

P_1 = 0.25 kW

n_2 min^{-1}	M_{n2} Nm	f_S	i	P_t kW					Rn_2 [N] MC	MZ	HC/PC	HZ/PZ	FZ	
0.47	4470	1.6	2916	6.0	**306L4**	—	**BN71A4**	—	35000	39900	79800	92100	35000	302
0.57	3710	3.0	2423	7.5	**307L4**	—	**BN71A4**	—	40900	51100	92100	121100	45000	314
0.59	3580	2.0	2337	6.0	**306L4**	—	**BN71A4**	—	33900	38700	77300	89300	35000	302
0.62	3440	1.1	2243	6.0	**305L4**	—	**BN71A4**	—	28300	32400	54600	64700	24000	290
0.67	3180	2.2	2074	6.0	**306L4**	—	**BN71A4**	—	33300	38000	76000	87800	35000	302
0.69	3050	0.9	1991	6.0	**303L4**	—	**BN71A4**	—	27800	31800	53700	63700	24000	266
0.69	3050	1.2	1991	6.0	**304L4**	—	**BN71A4**	—	27800	31800	53700	63700	24000	278
0.69	3050	1.8	1991	6.0	**305L4**	—	**BN71A4**	—	27800	31800	53700	63700	24000	290
0.74	2840	1.7	1854	6.0	**305L4**	—	**BN71A4**	—	27600	31500	53200	63000	24000	290
0.76	2780	1.1	1815	6.0	**304L4**	—	**BN71A4**	—	27500	31400	53000	62800	24000	278
0.87	2430	0.9	1586	6.0	**303L4**	—	**BN71A4**	—	27000	30800	52000	61600	24000	266
0.87	2430	1.6	1586	6.0	**304L4**	—	**BN71A4**	—	27000	30800	52000	61600	24000	278
0.87	2430	2.0	1586	6.0	**305L4**	—	**BN71A4**	—	27000	30800	52000	61600	24000	290
1.0	2100	1.2	1370	6.0	**303L4**	—	**BN71A4**	—	26400	30200	50900	60300	23900	266
1.0	2060	1.8	1344	6.0	**304L4**	—	**BN71A4**	—	26300	30100	50800	60200	23800	278
1.0	2100	2.2	1370	6.0	**305L4**	—	**BN71A4**	—	26400	30200	50900	60300	23900	290
1.1	1950	1.2	1275	6.0	**301L4**	—	**BN71A4**	—	8090	8090	26800	29200	7790	256
1.1	1960	1.4	1278	6.0	**303L4**	—	**BN71A4**	—	26100	29900	50400	59700	23400	266
1.1	1950	2.0	1271	6.0	**304L4**	—	**BN71A4**	—	26100	29900	50400	59700	23400	278
1.1	1960	2.8	1278	6.0	**305L4**	—	**BN71A4**	—	26100	29900	50400	59700	23400	290
1.2	1700	1.0	1108	6.0	**301L4**	—	**BN71A4**	—	7930	7930	26200	28700	7440	256
1.2	1780	1.6	1164	6.0	**304L4**	—	**BN71A4**	—	25800	29500	49700	59000	22700	278
1.3	1680	1.4	1098	6.0	**303L4**	—	**BN71A4**	—	25600	29200	49300	58500	22200	266
1.3	1680	2.7	1098	6.0	**305L4**	—	**BN71A4**	—	25600	29200	49300	58500	22200	290
1.4	1560	1.5	1022	6.0	**301L4**	—	**BN71A4**	—	7840	7840	25900	28300	7240	256
1.4	1560	1.8	1018	6.0	**303L4**	—	**BN71A4**	—	25300	28900	48800	57800	21700	266
1.4	1560	2.5	1018	6.0	**304L4**	—	**BN71A4**	—	25300	28900	48800	57800	21700	278
1.5	1440	1.6	942	6.0	**301L4**	—	**BN71A4**	—	7750	7750	25600	28000	7040	256
1.5	1370	1.6	896	6.0	**303L4**	—	**BN71A4**	—	24800	28400	47900	56800	20800	266
1.7	1250	0.9	819	6.0	**300L4**	—	**BN71A4**	—	7590	7590	25100	29200	6720	246
1.7	1250	1.8	819	6.0	**301L4**	—	**BN71A4**	—	7590	7590	25100	27400	6720	256
1.7	1250	2.2	816	6.0	**303L4**	—	**BN71A4**	—	24500	28000	47300	56000	20100	266
1.7	1220	1.5	797	12.0	—	**303R4**	**BN71A4**	—	24400	27900	47100	55900	20000	268
1.7	1260	1.8	824	12.0	—	**303R4**	**BN71A4**	—	24500	28100	47300	56100	20200	268
1.7	1220	2.9	797	12.0	—	**305R4**	**BN71A4**	—	24400	27900	47100	55900	20000	292
1.8	1160	1.0	755	6.0	**300L4**	—	**BN71A4**	—	7500	7500	24800	28900	6540	246
1.8	1160	1.9	755	6.0	**301L4**	—	**BN71A4**	—	7500	7500	24800	27100	6540	256
1.8	1170	1.3	766	10.0	—	**301R4**	**BN71A4**	—	7520	7520	24900	27200	6580	258
1.9	1100	2.0	718	6.0	**303L4**	—	**BN71A4**	—	24100	27500	46400	55000	19300	266
2.0	1080	2.5	702	6.0	**304L4**	—	**BN71A4**	—	24000	27400	46300	54800	19200	278
2.0	1070	2.5	699	12.0	—	**304R4**	**BN71A4**	—	24000	27400	46300	54800	19100	280
2.1	990	2.3	649	6.0	**303L4**	—	**BN71A4**	—	23700	27100	45800	54200	18700	266
2.1	1010	2.1	659	12.0	—	**303R4**	**BN71A4**	—	23800	27200	45900	54400	18800	268
2.2	940	1.2	616	6.0	**300L4**	—	**BN71A4**	—	7290	7290	24100	28000	6110	246
2.2	940	2.3	616	6.0	**301L4**	—	**BN71A4**	—	7290	7290	24100	26400	6110	256
2.3	940	1.6	613	10.0	—	**301R4**	**BN71A4**	—	7290	7290	24100	26300	6100	258
2.4	870	2.8	567	12.0	—	**303R4**	**BN71A4**	—	23300	26600	44900	53200	17800	268
2.5	850	1.3	558	6.0	**300L4**	—	**BN71A4**	—	7190	7190	23800	27600	5920	246
2.5	850	2.5	558	6.0	**301L4**	—	**BN71A4**	—	7190	7190	23800	26000	5920	256
2.5	860	3.0	560	12.0	—	**304R4**	**BN71A4**	—	23200	26500	44800	53100	17800	280
2.6	810	2.6	528	12.0	—	**303R4**	**BN71A4**	—	23000	26300	44400	52700	17400	268
2.8	760	1.4	494	6.0	**300L4**	—	**BN71A4**	—	7060	7060	23400	27200	5680	246
2.8	750	1.0	491	10.0	—	**300R4**	**BN71A4**	—	7060	7060	23300	27100	5670	248
2.8	760	2.8	494	6.0	**301L4**	—	**BN71A4**	—	7060	7060	23400	25500	5680	256
2.8	750	1.9	491	10.0	—	**301R4**	**BN71A4**	—	7060	7060	23300	25500	5670	258
3.0	690	1.5	453	10.0	—	**300R4**	**BN71A4**	—	6980	6980	23100	26800	5520	248
3.0	690	2.8	453	10.0	—	**301R4**	**BN71A4**	—	6980	6980	23100	25200	5520	258
3.1	680	1.5	447	6.0	**300L4**	—	**BN71A4**	—	6960	6960	23000	26800	5490	246
3.4	620	1.1	403	6.0	**300L4**	—	**BN71A4**	—	6860	6860	22700	26400	5310	246
3.4	620	2.2	403	6.0	**301L4**	—	**BN71A4**	—	6860	6860	22700	24800	5310	256
3.5	600	1.1	394	10.0	—	**300R4**	**BN71A4**	—	6840	6840	22600	26300	5270	248
3.5	600	2.3	394	10.0	—	**301R4**	**BN71A4**	—	6840	6840	22600	24700	5270	258
3.5	610	2.8	389	7.5	**303L3**	—	**BN71A4**	—	22100	25200	42500	50400	15700	266
3.7	590	1.2	374	7.5	**300L3**	—	**BN71A4**	—	6790	6790	22500	26100	5180	246
3.7	590	2.3	374	7.5	**301L3**	—	**BN71A4**	—	6790	6790	22500	24500	5180	256

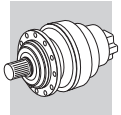

P_1 = 0.25 kW

n_2 min^{-1}	M_{n2} Nm	f_S	i	P_t kW					Rn_2 [N] MC	MZ	HC/PC	HZ/PZ	FZ	
3.8	560	1.8	363	10.0	**—**	**300R4**	**BN71A4**	**—**	6760	6760	22400	26000	5130	248
4.2	510	1.9	330	6.0	**300L4**	**—**	**BN71A4**	**—**	6670	6670	22100	25600	4970	246
4.6	470	1.4	299	7.5	**300L3**	**—**	**BN71A4**	**—**	6570	6570	21700	25300	4810	246
4.6	470	2.8	299	7.5	**301L3**	**—**	**BN71A4**	**—**	6570	6570	21700	23800	4810	256
4.7	450	2.2	291	10.0	**—**	**300R4**	**BN71A4**	**—**	6550	6550	21700	25200	4760	248
5.1	410	2.3	268	10.0	**—**	**300R4**	**BN71A4**	**—**	6500	6500	21500	25000	4630	248
5.8	380	1.7	240	7.5	**300L3**	**—**	**BN71A4**	**—**	6500	6500	21500	25000	4460	246
5.8	360	1.8	237	10.0	**—**	**300R4**	**BN71A4**	**—**	6500	6500	21500	25000	4450	248
6.2	350	2.6	221	7.5	**300L3**	**—**	**BN71A4**	**—**	6500	6500	21500	25000	4340	246
6.4	330	2.8	215	10.0	**—**	**300R4**	**BN71A4**	**—**	6500	6500	21500	25000	4300	248
7.2	300	2.1	192	7.5	**300L3**	**—**	**BN71A4**	**—**	6500	6500	21500	25000	4150	246
9.6	220	3.0	143	10.0	**—**	**300R4**	**BN71A4**	**—**	6500	6500	21500	25000	3760	248
10.4	210	2.6	133	12.0	**—**	**300R3**	**BN71A4**	**—**	6420	6420	21300	24700	3670	248

P_1 = 0.37 kW

n_2 min^{-1}	M_{n2} Nm	f_S	i	P_t kW					Rn_2 [N] MC	MZ	HC/PC	HZ/PZ	FZ	
0.47	6710	1.0	2916	6.0	**306L4**	**—**	**BN71B4**	**M1SD4**	35000	40000	79900	92200	35000	302
0.57	5580	2.0	2423	7.5	**307L4**	**—**	**BN71B4**	**M1SD4**	41000	51200	92200	121200	45000	314
0.59	5380	1.3	2337	6.0	**306L4**	**—**	**BN71B4**	**M1SD4**	34000	38700	77400	89400	35000	302
0.66	4770	1.5	2074	6.0	**306L4**	**—**	**BN71B4**	**M1SD4**	33400	38100	76100	87900	35000	302
0.69	4580	1.2	1991	6.0	**305L4**	**—**	**BN71B4**	**M1SD4**	27900	31900	53800	63700	24000	290
0.74	4270	1.1	1854	6.0	**305L4**	**—**	**BN71B4**	**M1SD4**	27600	31500	53200	63100	24000	290
0.74	4240	2.4	1843	6.0	**306L4**	**—**	**BN71B4**	**M1SD4**	32800	37400	74800	86400	35000	302
0.86	3650	1.1	1586	6.0	**304L4**	**—**	**BN71B4**	**M1SD4**	27000	30800	52000	61700	24000	278
0.86	3650	1.3	1586	6.0	**305L4**	**—**	**BN71B4**	**M1SD4**	27000	30800	52000	61700	24000	290
0.86	3680	2.3	1597	6.0	**306L4**	**—**	**BN71B4**	**M1SD4**	32200	36700	73300	84600	35000	302
0.93	3390	3.0	1475	6.0	**306L4**	**—**	**BN71B4**	**M1SD4**	31800	36200	72500	83700	35000	302
1.0	3090	1.2	1344	6.0	**304L4**	**—**	**BN71B4**	**M1SD4**	26400	30100	50800	60200	23800	278
1.0	3150	1.5	1370	6.0	**305L4**	**—**	**BN71B4**	**M1SD4**	26400	30200	51000	60400	24000	290
1.1	2940	1.0	1278	6.0	**303L4**	**—**	**BN71B4**	**M1SD4**	26200	29900	50500	59800	23500	266
1.1	2930	1.3	1271	6.0	**304L4**	**—**	**BN71B4**	**M1SD4**	26100	29900	50400	59800	23400	278
1.1	2940	1.9	1278	6.0	**305L4**	**—**	**BN71B4**	**M1SD4**	26200	29900	50500	59800	23500	290
1.1	2940	2.9	1279	6.0	**306L4**	**—**	**BN71B4**	**M1SD4**	31200	35500	71000	82000	34200	302
1.2	2530	0.9	1098	6.0	**303L4**	**—**	**BN71B4**	**M1SD4**	25600	29300	49400	58500	22300	266
1.2	2680	1.1	1164	6.0	**304L4**	**—**	**BN71B4**	**M1SD4**	25800	29500	49800	59000	22700	278
1.2	2530	1.8	1098	6.0	**305L4**	**—**	**BN71B4**	**M1SD4**	25600	29300	49400	58500	22300	290
1.3	2350	1.0	1022	6.0	**301L4**	**—**	**BN71B4**	**M1SD4**	7840	7840	25900	28400	7250	256
1.3	2340	1.2	1018	6.0	**303L4**	**—**	**BN71B4**	**M1SD4**	25300	29000	48900	57900	21700	266
1.3	2340	1.7	1018	6.0	**304L4**	**—**	**BN71B4**	**M1SD4**	25300	29000	48900	57900	21700	278
1.3	2340	2.3	1018	6.0	**305L4**	**—**	**BN71B4**	**M1SD4**	25300	29000	48900	57900	21700	290
1.5	2170	1.1	942	6.0	**301L4**	**—**	**BN71B4**	**M1SD4**	7750	7750	25600	28000	7060	256
1.5	2060	1.1	896	6.0	**303L4**	**—**	**BN71B4**	**M1SD4**	24900	28400	48000	56900	20800	266
1.5	2060	2.1	896	6.0	**305L4**	**—**	**BN71B4**	**M1SD4**	24900	28400	48000	56900	20800	290
1.7	1880	1.2	819	6.0	**301L4**	**—**	**BN71B4**	**M1SD4**	7600	7600	25100	27500	6740	256
1.7	1880	1.5	816	6.0	**303L4**	**—**	**BN71B4**	**M1SD4**	24500	28000	47300	56100	20200	266
1.7	1830	1.0	797	12.0	**—**	**303R4**	**BN71B4**	**M1SD4**	24500	28000	47200	55900	20000	268
1.7	1900	1.2	824	12.0	**—**	**303R4**	**BN71B4**	**M1SD4**	24600	28100	47400	56200	20300	268
1.7	1880	2.0	816	6.0	**304L4**	**—**	**BN71B4**	**M1SD4**	24500	28000	47300	56100	20200	278
1.7	1880	2.9	816	6.0	**305L4**	**—**	**BN71B4**	**M1SD4**	24500	28000	47300	56100	20200	290
1.7	1830	1.9	797	12.0	**—**	**305R4**	**BN71B4**	**M1SD4**	24500	28000	47200	55900	20000	292
1.7	1900	2.3	824	12.0	**—**	**305R4**	**BN71B4**	**M1SD4**	24600	28100	47400	56200	20300	292
1.8	1740	1.3	755	6.0	**301L4**	**—**	**BN71B4**	**M1SD4**	7510	7510	24800	27200	6560	256
1.9	1650	1.3	718	6.0	**303L4**	**—**	**BN71B4**	**M1SD4**	24100	27500	46500	55100	19400	266
1.9	1650	2.5	718	6.0	**305L4**	**—**	**BN71B4**	**M1SD4**	24100	27500	46500	55100	19400	290
2.0	1620	1.7	702	6.0	**304L4**	**—**	**BN71B4**	**M1SD4**	24000	27500	46300	54900	19200	278
2.0	1610	1.7	699	12.0	**—**	**304R4**	**BN71B4**	**M1SD4**	24000	27400	46300	54900	19200	280
2.1	1490	1.6	649	6.0	**303L4**	**—**	**BN71B4**	**M1SD4**	23800	27100	45800	54300	18700	266
2.1	1520	1.4	659	12.0	**—**	**303R4**	**BN71B4**	**M1SD4**	23800	27200	45900	54400	18800	268
2.1	1490	2.4	649	6.0	**304L4**	**—**	**BN71B4**	**M1SD4**	23800	27100	45800	54300	18700	278

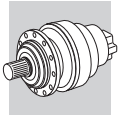

A

P_1 = 0.37 kW

n_2 min^{-1}	M_{n2} Nm	f_S	i	P_t kW					Rn_2 [N] MC	MZ	HC/PC	HZ/PZ	FZ	
2.1	1520	2.7	659	12.0	**—**	**305R4**	**BN71B4**	**M1SD4**	23800	27200	45900	54400	18800	292
2.2	1420	1.5	616	6.0	**301L4**	**—**	**BN71B4**	**M1SD4**	7300	7300	24100	26400	6130	256
2.2	1410	1.1	613	10.0	**—**	**301R4**	**BN71B4**	**M1SD4**	7290	7290	24100	26400	6120	258
2.4	1300	1.9	567	12.0	**—**	**303R4**	**BN71B4**	**M1SD4**	23300	26600	44900	53300	17900	268
2.4	1290	2.0	560	12.0	**—**	**304R4**	**BN71B4**	**M1SD4**	23300	26600	44800	53200	17800	280
2.5	1280	1.7	558	6.0	**301L4**	**—**	**BN71B4**	**M1SD4**	7190	7190	23800	26000	5930	256
2.5	1280	2.2	556	6.0	**303L4**	**—**	**BN71B4**	**M1SD4**	23200	26600	44800	53100	17800	266
2.5	1280	2.9	556	6.0	**304L4**	**—**	**BN71B4**	**M1SD4**	23200	26600	44800	53100	17800	278
2.6	1220	1.7	528	12.0	**—**	**303R4**	**BN71B4**	**M1SD4**	23100	26400	44500	52700	17500	268
2.8	1140	0.9	494	6.0	**300L4**	**—**	**BN71B4**	**M1SD4**	7070	7070	23400	27200	5690	246
2.8	1140	1.8	494	6.0	**301L4**	**—**	**BN71B4**	**M1SD4**	7070	7070	23400	25600	5690	256
2.8	1130	1.3	491	10.0	**—**	**301R4**	**BN71B4**	**M1SD4**	7070	7070	23400	25500	5680	258
2.8	1130	2.4	492	6.0	**303L4**	**—**	**BN71B4**	**M1SD4**	22800	26100	44000	52200	17100	266
3.0	1040	1.0	453	10.0	**—**	**300R4**	**BN71B4**	**M1SD4**	6980	6980	23100	26900	5530	248
3.0	1040	1.9	453	10.0	**—**	**301R4**	**BN71B4**	**M1SD4**	6980	6980	23100	25300	5530	258
3.0	1040	2.2	452	12.0	**—**	**303R4**	**BN71B4**	**M1SD4**	22600	25800	43500	51600	16600	268
3.1	1030	1.0	447	6.0	**300L4**	**—**	**BN71B4**	**M1SD4**	6970	6970	23100	26800	5510	246
3.1	1030	2.0	447	6.0	**301L4**	**—**	**BN71B4**	**M1SD4**	6970	6970	23100	25200	5510	256
3.1	1030	2.7	446	6.0	**303L4**	**—**	**BN71B4**	**M1SD4**	22500	25700	43400	51500	16500	266
3.2	1010	2.5	426	7.5	**304L3**	**—**	**BN71B4**	**M1SD4**	22400	25600	43100	51100	16300	278
3.3	950	2.5	413	6.0	**303L4**	**—**	**BN71B4**	**M1SD4**	22300	25500	42900	50900	16100	266
3.3	950	2.6	414	12.0	**—**	**304R4**	**BN71B4**	**M1SD4**	22300	25500	43000	50900	16100	280
3.4	930	1.5	403	6.0	**301L4**	**—**	**BN71B4**	**M1SD4**	6870	6870	22700	24800	5320	256
3.4	950	2.1	402	7.5	**303L3**	**—**	**BN71B4**	**M1SD4**	22200	25300	42800	50700	15900	266
3.5	910	1.5	394	10.0	**—**	**301R4**	**BN71B4**	**M1SD4**	6850	6850	22600	24700	5280	258
3.5	920	1.8	389	7.5	**303L3**	**—**	**BN71B4**	**M1SD4**	22100	25200	42600	50500	15800	266
3.5	900	2.2	390	12.0	**—**	**303R4**	**BN71B4**	**M1SD4**	22100	25200	42600	50500	15800	268
3.7	890	1.5	374	7.5	**301L3**	**—**	**BN71B4**	**M1SD4**	6800	6800	22500	24600	5190	256
3.8	840	1.2	363	10.0	**—**	**300R4**	**BN71B4**	**M1SD4**	6770	6770	22400	26000	5140	248
3.8	840	2.4	363	10.0	**—**	**301R4**	**BN71B4**	**M1SD4**	6770	6770	22400	24500	5140	258
3.8	840	2.8	364	12.0	**—**	**303R4**	**BN71B4**	**M1SD4**	21900	25000	42200	50000	15400	268
4.1	760	1.3	330	6.0	**300L4**	**—**	**BN71B4**	**M1SD4**	6680	6680	22100	25700	4980	246
4.1	760	2.6	330	6.0	**301L4**	**—**	**BN71B4**	**M1SD4**	6680	6680	22100	24100	4980	256
4.1	770	3.0	336	12.0	**—**	**303R4**	**BN71B4**	**M1SD4**	21600	24700	41700	49400	15000	268
4.3	760	2.5	321	7.5	**303L3**	**—**	**BN71B4**	**M1SD4**	21500	24600	41400	49100	14800	266
4.4	720	2.6	313	12.0	**—**	**303R4**	**BN71B4**	**M1SD4**	21400	24500	41300	48900	14700	268
4.6	710	0.9	299	7.5	**300L3**	**—**	**BN71B4**	**M1SD4**	6580	6580	21800	25300	4820	246
4.6	710	1.9	299	7.5	**301L3**	**—**	**BN71B4**	**M1SD4**	6580	6580	21800	23800	4820	256
4.7	670	1.4	291	10.0	**—**	**300R4**	**BN71B4**	**M1SD4**	6560	6560	21700	25200	4770	248
4.7	670	2.9	291	10.0	**—**	**301R4**	**BN71B4**	**M1SD4**	6560	6560	21700	23700	4770	258
5.1	620	1.5	268	10.0	**—**	**300R4**	**BN71B4**	**M1SD4**	6500	6500	21500	25000	4650	248
5.7	570	1.1	240	7.5	**300L3**	**—**	**BN71B4**	**M1SD4**	6500	6500	21500	25000	4470	246
5.7	570	2.3	240	7.5	**301L3**	**—**	**BN71B4**	**M1SD4**	6500	6500	21500	23500	4470	256
5.8	550	1.2	237	10.0	**—**	**300R4**	**BN71B4**	**M1SD4**	6500	6500	21500	25000	4460	248
5.8	550	2.4	237	10.0	**—**	**301R4**	**BN71B4**	**M1SD4**	6500	6500	21500	23500	4460	258
6.2	520	1.8	221	7.5	**300L3**	**—**	**BN71B4**	**M1SD4**	6500	6500	21500	25000	4350	246
6.4	490	1.9	215	10.0	**—**	**300R4**	**BN71B4**	**M1SD4**	6500	6500	21500	25000	4310	248
7.1	460	1.4	192	7.5	**300L3**	**—**	**BN71B4**	**M1SD4**	6500	6500	21500	25000	4160	246
7.1	460	2.9	192	7.5	**301L3**	**—**	**BN71B4**	**M1SD4**	6500	6500	21500	23500	4160	256
7.7	420	2.1	177	7.5	**300L3**	**—**	**BN71B4**	**M1SD4**	6500	6500	21500	25000	4040	246
7.8	400	2.2	175	10.0	**—**	**300R4**	**BN71B4**	**M1SD4**	6500	6500	21500	25000	4030	248
8.6	370	2.4	159	10.0	**—**	**300R4**	**BN71B4**	**M1SD4**	6500	6500	21500	25000	3900	248
9.6	330	2.0	143	10.0	**—**	**300R4**	**BN71B4**	**M1SD4**	6500	6500	21500	25000	3770	248
9.7	340	2.6	142	7.5	**300L3**	**—**	**BN71B4**	**M1SD4**	6500	6500	21500	25000	3760	246
10.3	320	1.7	133	12.0	**—**	**300R3**	**BN71B4**	**M1SD4**	6430	6430	21300	24800	3680	248
10.5	310	2.8	131	7.5	**300L3**	**—**	**BN71B4**	**M1SD4**	6400	6400	21200	24700	3660	246
10.6	300	2.9	130	10.0	**—**	**300R4**	**BN71B4**	**M1SD4**	6380	6380	21100	24600	3650	248
11.8	270	2.4	116	7.5	**300L3**	**—**	**BN71B4**	**M1SD4**	6150	6150	20400	23800	3510	246
12.9	250	2.6	106	12.0	**—**	**300R3**	**BN71B4**	**M1SD4**	5980	5980	19900	23200	3410	248

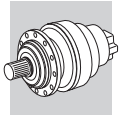

P_1 = 0.55 kW

n_2 min^{-1}	M_{n2} Nm	f_S	i	P_t kW					Rn_2 [N] MC	MZ	HC/PC	HZ/PZ	FZ	
0.55	8490	2.8	2523	11.0	**310ML4**	**—**	**BN80A4**	**—**	—	—	106900	135500	65000	338
0.57	8150	1.3	2423	7.5	**307L4**	**—**	**BN80A4**	**M1LA4**	40900	51100	92000	121000	45000	314
0.57	8150	2.1	2423	7.5	**309L4**	**—**	**BN80A4**	**—**	—	—	94000	121000	36000	326
0.67	6980	1.0	2074	6.0	**306L4**	**—**	**BN80A4**	**M1LA4**	33300	38000	76000	87700	35000	302
0.68	6870	2.1	2041	7.5	**307L4**	**—**	**BN80A4**	**M1LA4**	39900	49900	89700	118100	45000	314
0.69	6740	2.5	2003	7.5	**309L4**	**—**	**BN80A4**	**—**	—	—	91500	117700	36000	326
0.75	6200	1.6	1843	6.0	**306L4**	**—**	**BN80A4**	**M1LA4**	32800	37300	74700	86200	35000	302
0.79	5950	2.6	1767	7.5	**307L4**	**—**	**BN80A4**	**M1LA4**	39100	48800	87900	115700	45000	314
0.81	5800	2.9	1723	7.5	**309L4**	**—**	**BN80A4**	**—**	—	—	89500	115200	36000	326
0.87	5370	1.6	1597	6.0	**306L4**	**—**	**BN80A4**	**M1LA4**	32100	36600	73200	84500	35000	302
0.87	5350	2.8	1591	7.5	**307L4**	**—**	**BN80A4**	**M1LA4**	38500	48100	86600	113900	45000	314
0.94	4960	2.0	1475	6.0	**306L4**	**—**	**BN80A4**	**M1LA4**	31700	36200	72300	83500	35000	302
1.0	4610	1.0	1370	6.0	**305L4**	**—**	**BN80A4**	**M1LA4**	26400	30100	50900	60300	23900	290
1.1	4280	0.9	1271	6.0	**304L4**	**—**	**BN80A4**	**M1LA4**	26100	29800	50300	59600	23300	278
1.1	4300	1.3	1278	6.0	**305L4**	**—**	**BN80A4**	**M1LA4**	26100	29800	50400	59700	23300	290
1.1	4300	2.0	1279	6.0	**306L4**	**—**	**BN80A4**	**M1LA4**	31100	35400	70900	81800	34000	302
1.1	4290	2.9	1274	7.5	**307L4**	**—**	**BN80A4**	**M1LA4**	37300	46600	83900	110400	43700	314
1.3	3690	1.2	1098	6.0	**305L4**	**—**	**BN80A4**	**M1LA4**	25600	29200	49300	58400	22200	290
1.3	3680	2.1	1095	6.0	**306L4**	**—**	**BN80A4**	**M1LA4**	30400	34700	69300	80000	32300	302
1.4	3430	1.1	1018	6.0	**304L4**	**—**	**BN80A4**	**M1LA4**	25300	28900	48800	57800	21600	278
1.4	3430	1.6	1018	6.0	**305L4**	**—**	**BN80A4**	**M1LA4**	25300	28900	48800	57800	21600	290
1.4	3410	2.8	1015	6.0	**306L4**	**—**	**BN80A4**	**M1LA4**	30100	34300	68600	79200	31500	302
1.6	3020	1.4	896	6.0	**305L4**	**—**	**BN80A4**	**M1LA4**	24800	28400	47900	56700	20700	290
1.6	2950	2.6	877	6.0	**306L4**	**—**	**BN80A4**	**M1LA4**	29500	33600	67200	77500	30000	302
1.7	2750	1.0	816	6.0	**303L4**	**—**	**BN80A4**	**M1LA4**	24500	28000	47200	56000	20100	266
1.7	2750	1.4	816	6.0	**304L4**	**—**	**BN80A4**	**M1LA4**	24500	28000	47200	56000	20100	278
1.7	2750	2.0	816	6.0	**305L4**	**—**	**BN80A4**	**M1LA4**	24500	28000	47200	56000	20100	290
1.7	2680	1.3	797	12.0	**—**	**305R4**	**BN80A4**	**M1LA4**	24400	27900	47100	55800	19900	292
1.7	2770	1.5	824	12.0	**—**	**305R4**	**BN80A4**	**M1LA4**	24500	28000	47300	56100	20200	292
1.7	2720	2.8	809	6.0	**306L4**	**—**	**BN80A4**	**M1LA4**	29100	33200	66400	76600	29200	302
1.7	2790	2.3	830	12.0	**—**	**306R4**	**BN80A4**	**M1LA4**	29200	33300	66600	76900	29500	304
1.9	2420	0.9	718	6.0	**303L4**	**—**	**BN80A4**	**M1LA4**	24000	27500	46400	55000	19300	266
1.9	2420	1.7	718	6.0	**305L4**	**—**	**BN80A4**	**M1LA4**	24000	27500	46400	55000	19300	290
2.0	2360	1.1	702	6.0	**304L4**	**—**	**BN80A4**	**M1LA4**	24000	27400	46200	54800	19100	278
2.0	2350	1.1	699	12.0	**—**	**304R4**	**BN80A4**	**M1LA4**	24000	27400	46200	54800	19100	280
2.1	2180	1.1	649	6.0	**303L4**	**—**	**BN80A4**	**M1LA4**	23700	27100	45700	54200	18600	266
2.1	2220	1.0	659	12.0	**—**	**303R4**	**BN80A4**	**M1LA4**	23800	27100	45800	54300	18700	268
2.1	2180	1.6	649	6.0	**304L4**	**—**	**BN80A4**	**M1LA4**	23700	27100	45700	54200	18600	278
2.1	2180	2.1	649	6.0	**305L4**	**—**	**BN80A4**	**M1LA4**	23700	27100	45700	54200	18600	290
2.1	2220	1.9	659	12.0	**—**	**305R4**	**BN80A4**	**M1LA4**	23800	27100	45800	54300	18700	292
2.1	2240	2.7	665	12.0	**—**	**306R4**	**BN80A4**	**M1LA4**	28300	32300	64600	74500	27400	304
2.3	2070	1.0	616	6.0	**301L4**	**—**	**BN80A4**	**M1LA4**	7280	7280	24100	26300	6100	256
2.5	1880	1.1	558	6.0	**301L4**	**—**	**BN80A4**	**M1LA4**	7180	7180	23700	26000	5900	256
2.5	1870	1.5	556	6.0	**303L4**	**—**	**BN80A4**	**M1LA4**	23200	26500	44700	53000	17700	266
2.5	1910	1.3	567	12.0	**—**	**303R4**	**BN80A4**	**M1LA4**	23200	26600	44800	53100	17800	268
2.5	1870	2.0	556	6.0	**304L4**	**—**	**BN80A4**	**M1LA4**	23200	26500	44700	53000	17700	278
2.5	1880	1.4	560	12.0	**—**	**304R4**	**BN80A4**	**M1LA4**	23200	26500	44800	53000	17700	280
2.5	1870	2.9	556	6.0	**305L4**	**—**	**BN80A4**	**M1LA4**	23200	26500	44700	53000	17700	290
2.5	1910	2.6	567	12.0	**—**	**305R4**	**BN80A4**	**M1LA4**	23200	26600	44800	53100	17800	292
2.6	1780	1.2	528	12.0	**—**	**303R4**	**BN80A4**	**M1LA4**	23000	26300	44400	52600	17400	268
2.6	1780	2.2	528	12.0	**—**	**305R4**	**BN80A4**	**M1LA4**	23000	26300	44400	52600	17400	292
2.8	1660	1.3	494	6.0	**301L4**	**—**	**BN80A4**	**M1LA4**	7060	7060	23300	25500	5670	256
2.8	1660	1.6	492	6.0	**303L4**	**—**	**BN80A4**	**M1LA4**	22800	26000	43900	52100	17000	266
2.8	1660	2.3	492	6.0	**304L4**	**—**	**BN80A4**	**M1LA4**	22800	26000	43900	52100	17000	278
3.1	1500	1.4	447	6.0	**301L4**	**—**	**BN80A4**	**M1LA4**	6960	6960	23000	25100	5480	256
3.1	1520	1.3	453	10.0	**—**	**301R4**	**BN80A4**	**M1LA4**	6970	6970	23100	25200	5510	258
3.1	1500	1.9	446	6.0	**303L4**	**—**	**BN80A4**	**M1LA4**	22500	25700	43300	51300	16400	266
3.1	1520	1.5	452	12.0	**—**	**303R4**	**BN80A4**	**M1LA4**	22500	25700	43400	51400	16500	268
3.1	1500	2.5	446	6.0	**304L4**	**—**	**BN80A4**	**M1LA4**	22500	25700	43300	51300	16400	278
3.1	1520	2.4	452	12.0	**—**	**304R4**	**BN80A4**	**M1LA4**	22500	25700	43400	51400	16500	280
3.3	1480	1.7	426	7.5	**304L3**	**—**	**BN80A4**	**M1LA4**	22300	25500	43000	51000	16200	278
3.4	1360	1.0	403	6.0	**301L4**	**—**	**BN80A4**	**M1LA4**	6850	6850	22700	24800	5300	256
3.4	1390	1.7	413	6.0	**303L4**	**—**	**BN80A4**	**M1LA4**	22200	25400	42900	50800	16000	266
3.4	1390	2.2	413	6.0	**304L4**	**—**	**BN80A4**	**M1LA4**	22200	25400	42900	50800	16000	278
3.4	1390	1.8	414	12.0	**—**	**304R4**	**BN80A4**	**M1LA4**	22200	25400	42900	50800	16000	280

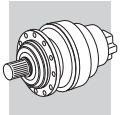

A

P_1 = 0.55 kW

n_2 min^{-1}	M_{n2} Nm	f_S	i	P_t kW					Rn_2 [N] MC	MZ	HC/PC	HZ/PZ	FZ	
3.5	1320	1.0	394	10.0	—	**301R4**	**BN80A4**	**M1LA4**	6830	6830	22600	24700	5250	258
3.5	1390	1.4	402	7.5	**303L3**	—	**BN80A4**	**M1LA4**	22100	25300	42700	50600	15900	266
3.5	1390	2.7	402	6.0	**305L3**	—	**BN80A4**	**M1LA4**	22100	25300	42700	50600	15900	290
3.6	1350	1.3	389	7.5	**303L3**	—	**BN80A4**	**M1LA4**	22000	25200	42500	50400	15700	266
3.6	1310	1.5	390	12.0	—	**303R4**	**BN80A4**	**M1LA4**	22000	25200	42500	50400	15700	268
3.6	1350	2.4	389	7.5	**305L3**	—	**BN80A4**	**M1LA4**	22000	25200	42500	50400	15700	290
3.6	1310	2.9	390	12.0	—	**305R4**	**BN80A4**	**M1LA4**	22000	25200	42500	50400	15700	292
3.7	1300	1.1	374	7.5	**301L3**	—	**BN80A4**	**M1LA4**	6780	6780	22400	24500	5160	256
3.8	1220	1.6	363	10.0	—	**301R4**	**BN80A4**	**M1LA4**	6750	6750	22300	24400	5110	258
3.8	1220	1.9	364	12.0	—	**303R4**	**BN80A4**	**M1LA4**	21800	24900	42100	49900	15400	268
3.8	1220	2.4	364	12.0	—	**304R4**	**BN80A4**	**M1LA4**	21800	24900	42100	49900	15400	280
4.1	1130	2.0	336	12.0	—	**303R4**	**BN80A4**	**M1LA4**	21600	24700	41600	49300	14900	268
4.1	1180	2.1	341	7.5	**304L3**	—	**BN80A4**	**M1LA4**	21600	24700	41700	49400	15000	278
4.1	1140	2.1	338	12.0	—	**304R4**	**BN80A4**	**M1LA4**	21600	24700	41600	49300	15000	280
4.2	1110	1.8	330	6.0	**301L4**	—	**BN80A4**	**M1LA4**	6660	6660	22000	24100	4960	256
4.3	1110	1.7	321	7.5	**303L3**	—	**BN80A4**	**M1LA4**	21400	24500	41300	49000	14700	266
4.4	1050	1.8	313	12.0	—	**303R4**	**BN80A4**	**M1LA4**	21400	24400	41200	48800	14600	268
4.6	1040	1.3	299	7.5	**301L3**	—	**BN80A4**	**M1LA4**	6570	6570	21700	23700	4790	256
4.8	980	1.0	291	10.0	—	**300R4**	**BN80A4**	**M1LA4**	6540	6540	21600	25200	4750	248
4.8	980	2.0	291	10.0	—	**301R4**	**BN80A4**	**M1LA4**	6540	6540	21600	23700	4750	258
4.8	980	2.7	290	12.0	—	**303R4**	**BN80A4**	**M1LA4**	21100	24100	40700	48300	14200	268
5.0	960	2.3	276	7.5	**303L3**	—	**BN80A4**	**M1LA4**	21000	24000	40500	48000	14000	266
5.1	950	2.5	273	7.5	**304L3**	—	**BN80A4**	**M1LA4**	21000	24000	40500	48000	14000	278
5.2	900	1.0	268	10.0	—	**300R4**	**BN80A4**	**M1LA4**	6500	6500	21500	25000	4620	248
5.2	900	2.1	268	10.0	—	**301R4**	**BN80A4**	**M1LA4**	6500	6500	21500	23500	4620	258
5.4	890	2.1	258	7.5	**303L3**	—	**BN80A4**	**M1LA4**	21000	24000	40500	48000	13700	266
5.4	860	2.1	255	12.0	—	**303R4**	**BN80A4**	**M1LA4**	21000	24000	40500	48000	13600	268
5.8	830	1.6	240	7.5	**301L3**	—	**BN80A4**	**M1LA4**	6500	6500	21500	23500	4450	256
5.9	800	1.6	237	10.0	—	**301R4**	**BN80A4**	**M1LA4**	6500	6500	21500	23500	4440	258
6.0	780	2.4	231	12.0	—	**303R4**	**BN80A4**	**M1LA4**	21000	24000	40500	48000	13200	268
6.3	770	1.2	221	7.5	**300L3**	—	**BN80A4**	**M1LA4**	6500	6500	21500	25000	4330	246
6.3	770	2.3	221	7.5	**301L3**	—	**BN80A4**	**M1LA4**	6500	6500	21500	23500	4330	256
6.3	760	2.9	220	7.5	**303L3**	—	**BN80A4**	**M1LA4**	21000	24000	40500	48000	13000	266
6.5	720	1.3	215	10.0	—	**300R4**	**BN80A4**	**M1LA4**	6500	6500	21500	25000	4290	248
6.5	720	2.5	215	10.0	—	**301R4**	**BN80A4**	**M1LA4**	6500	6500	21500	23500	4290	258
7.2	670	1.0	192	7.5	**300L3**	—	**BN80A4**	**M1LA4**	6500	6500	21500	25000	4140	246
7.2	670	2.0	192	7.5	**301L3**	—	**BN80A4**	**M1LA4**	6500	6500	21500	23500	4140	256
7.3	660	2.8	190	7.5	**303L3**	—	**BN80A4**	**M1LA4**	21000	24000	40500	48000	12400	266
7.8	610	1.4	177	7.5	**300L3**	—	**BN80A4**	**M1LA4**	6500	6500	21500	25000	4030	246
7.8	610	2.9	177	7.5	**301L3**	—	**BN80A4**	**M1LA4**	6500	6500	21500	23500	4030	256
7.9	590	1.5	175	10.0	—	**300R4**	**BN80A4**	**M1LA4**	6500	6500	21500	25000	4010	248
8.8	530	1.6	159	10.0	—	**300R4**	**BN80A4**	**M1LA4**	6500	6500	21500	25000	3880	248
9.7	480	1.3	143	10.0	—	**300R4**	**BN80A4**	**M1LA4**	6500	6500	21500	25000	3750	248
9.7	480	2.7	143	10.0	—	**301R4**	**BN80A4**	**M1LA4**	6500	6500	21500	23500	3750	258
9.8	490	1.8	142	7.5	**300L3**	—	**BN80A4**	**M1LA4**	6500	6500	21500	25000	3740	246
10.5	460	1.2	133	12.0	—	**300R3**	**BN80A4**	**M1LA4**	6400	6400	21200	24700	3660	248
10.5	460	2.5	133	12.0	—	**301R3**	**BN80A4**	**M1LA4**	6400	6400	21200	23200	3660	258
10.6	450	1.9	131	7.5	**300L3**	—	**BN80A4**	**M1LA4**	6370	6370	21100	24600	3640	246
10.7	440	2.0	130	10.0	—	**300R4**	**BN80A4**	**M1LA4**	6350	6350	21100	24500	3630	248
12.0	400	1.6	116	7.5	**300L3**	—	**BN80A4**	**M1LA4**	6120	6120	20400	23700	3490	246
13.1	370	1.8	106	12.0	—	**300R3**	**BN80A4**	**M1LA4**	5950	5950	19800	23100	3400	248
13.1	360	2.4	106	10.0	—	**300R4**	**BN80A4**	**M1LA4**	5940	5940	19800	23000	3390	248
13.3	360	2.4	105	7.5	**300L3**	—	**BN80A4**	**M1LA4**	5920	5920	19800	23000	3380	246
16.2	300	2.9	85.6	7.5	**300L3**	—	**BN80A4**	**M1LA4**	5530	5530	18600	21600	3160	246
16.3	300	2.2	85.2	12.0	—	**300R3**	**BN80A4**	**M1LA4**	5520	5520	18600	21600	3150	248
19.9	240	2.7	69.9	7.5	**300L3**	—	**BN80A4**	**M1LA4**	5170	5170	17500	20300	2950	246
20.4	240	2.7	68.2	12.0	—	**300R3**	**BN80A4**	**M1LA4**	5130	5130	17400	20200	2930	248
21.5	230	2.4	64.8	7.5	**300L2**	—	**BN80A4**	**M1LA4**	5040	5040	17100	19900	2880	246

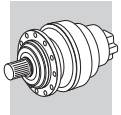

P_1 = 0.75 kW

n_2 min^{-1}	M_{n2} Nm	f_S	i	P_t kW					Rn_2 [N] MC	MZ	HC/PC	HZ/PZ	FZ	
0.55	11400	2.1	2523	11.0	**310ML4**	**—**	**BN80B4**	**—**	—	—	106800	135400	65000	338
0.58	10900	1.0	2423	7.5	**307L4**	**—**	**BN80B4**	**M2SA4**	40800	51000	91900	120900	45000	314
0.58	10900	1.6	2423	7.5	**309L4**	**—**	**BN80B4**	**—**	—	—	93900	120900	36000	326
0.69	9220	1.6	2041	7.5	**307L4**	**—**	**BN80B4**	**M2SA4**	39800	49800	89700	117900	45000	314
0.69	9130	2.6	2022	11.0	**310ML4**	**—**	**BN80B4**	**—**	—	—	103500	131200	65000	338
0.70	9040	1.9	2003	7.5	**309L4**	**—**	**BN80B4**	**—**	—	—	91400	117600	36000	326
0.76	8320	1.2	1843	6.0	**306L4**	**—**	**BN80B4**	**M2SA4**	32700	37300	74600	86100	35000	302
0.78	8100	3.0	1794	11.0	**310ML4**	**—**	**BN80B4**	**—**	—	—	101700	129000	65000	338
0.79	7980	2.0	1767	7.5	**307L4**	**—**	**BN80B4**	**M2SA4**	39000	48800	87800	115500	45000	314
0.81	7780	2.2	1723	7.5	**309L4**	**—**	**BN80B4**	**—**	—	—	89400	115100	36000	326
0.87	7250	2.3	1605	7.5	**309L4**	**—**	**BN80B4**	**—**	—	—	88500	114000	36000	326
0.88	7210	1.2	1597	6.0	**306L4**	**—**	**BN80B4**	**M2SA4**	32100	36500	73100	84400	35000	302
0.88	7180	2.1	1591	7.5	**307L4**	**—**	**BN80B4**	**M2SA4**	38400	48100	86500	113800	45000	314
0.95	6660	1.5	1475	6.0	**306L4**	**—**	**BN80B4**	**M2SA4**	31700	36100	72300	83400	35000	302
0.99	6360	2.5	1408	7.5	**307L4**	**—**	**BN80B4**	**M2SA4**	37800	47200	85000	111800	45000	314
1.0	6230	2.7	1380	7.5	**309L4**	**—**	**BN80B4**	**—**	—	—	86700	111500	35800	326
1.1	5770	1.0	1278	6.0	**305L4**	**—**	**BN80B4**	**M2SA4**	26100	29800	50300	59600	23300	290
1.1	5780	1.5	1279	6.0	**306L4**	**—**	**BN80B4**	**M2SA4**	31100	35400	70800	81800	34000	302
1.1	5750	2.1	1274	7.5	**307L4**	**—**	**BN80B4**	**M2SA4**	37300	46600	83800	110300	43600	314
1.1	5810	2.9	1286	7.5	**309L4**	**—**	**BN80B4**	**—**	—	—	85800	110400	35000	326
1.2	5220	2.8	1157	7.5	**307L4**	**—**	**BN80B4**	**M2SA4**	36700	45900	82700	108700	42200	314
1.3	4960	0.9	1098	6.0	**305L4**	**—**	**BN80B4**	**M2SA4**	25500	29200	49200	58300	22100	290
1.3	4940	1.6	1095	6.0	**306L4**	**—**	**BN80B4**	**M2SA4**	30400	34600	69300	79900	32200	302
1.4	4600	1.2	1018	6.0	**305L4**	**—**	**BN80B4**	**M2SA4**	25300	28900	48700	57700	21600	290
1.4	4580	2.1	1015	6.0	**306L4**	**—**	**BN80B4**	**M2SA4**	30000	34300	68500	79100	31400	302
1.6	4050	1.1	896	6.0	**305L4**	**—**	**BN80B4**	**M2SA4**	24800	28300	47800	56700	20700	290
1.6	3960	2.0	877	6.0	**306L4**	**—**	**BN80B4**	**M2SA4**	29400	33500	67100	77500	29900	302
1.7	3680	1.0	816	6.0	**304L4**	**—**	**BN80B4**	**M2SA4**	24500	28000	47200	55900	20000	278
1.7	3680	1.5	816	6.0	**305L4**	**—**	**BN80B4**	**M2SA4**	24500	28000	47200	55900	20000	290
1.7	3720	1.2	824	12.0	**—**	**305R4**	**BN80B4**	**M2SA4**	24500	28000	47200	56000	20100	292
1.7	3650	2.1	809	6.0	**306L4**	**—**	**BN80B4**	**M2SA4**	29100	33200	66300	76600	29200	302
1.7	3750	1.7	830	12.0	**—**	**306R4**	**BN80B4**	**M2SA4**	29200	33300	66600	76900	29400	304
1.8	3600	1.0	797	12.0	**—**	**305R4**	**BN80B4**	**M2SA4**	24400	27900	47000	55700	19900	292
1.9	3240	1.3	718	6.0	**305L4**	**—**	**BN80B4**	**M2SA4**	24000	27500	46300	54900	19200	290
2.1	2970	1.4	659	12.0	**—**	**305R4**	**BN80B4**	**M2SA4**	23700	27100	45800	54200	18700	292
2.1	3000	2.0	665	12.0	**—**	**306R4**	**BN80B4**	**M2SA4**	28300	32300	64500	74500	27300	304
2.2	2930	1.2	649	6.0	**304L4**	**—**	**BN80B4**	**M2SA4**	23700	27100	45700	54100	18600	278
2.2	2930	1.5	649	6.0	**305L4**	**—**	**BN80B4**	**M2SA4**	23700	27100	45700	54100	18600	290
2.5	2510	1.1	556	6.0	**303L4**	**—**	**BN80B4**	**M2SA4**	23200	26500	44700	52900	17600	266
2.5	2560	1.0	567	12.0	**—**	**303R4**	**BN80B4**	**M2SA4**	23200	26500	44800	53100	17800	268
2.5	2510	1.5	556	6.0	**304L4**	**—**	**BN80B4**	**M2SA4**	23200	26500	44700	52900	17600	278
2.5	2530	1.0	560	12.0	**—**	**304R4**	**BN80B4**	**M2SA4**	23200	26500	44700	53000	17700	280
2.5	2510	2.2	556	6.0	**305L4**	**—**	**BN80B4**	**M2SA4**	23200	26500	44700	52900	17600	290
2.5	2560	1.9	567	12.0	**—**	**305R4**	**BN80B4**	**M2SA4**	23200	26500	44800	53100	17800	292
2.5	2480	3.0	550	12.0	**—**	**306R4**	**BN80B4**	**M2SA4**	27500	31400	62800	72500	25600	304
2.7	2380	1.7	528	12.0	**—**	**305R4**	**BN80B4**	**M2SA4**	23000	26300	44300	52600	17300	292
2.8	2230	0.9	494	6.0	**301L4**	**—**	**BN80B4**	**M2SA4**	7050	7050	23300	25500	5650	256
2.8	2220	1.2	492	6.0	**303L4**	**—**	**BN80B4**	**M2SA4**	22800	26000	43900	52000	16900	266
2.8	2220	1.7	492	6.0	**304L4**	**—**	**BN80B4**	**M2SA4**	22800	26000	43900	52000	16900	278
2.8	2220	2.4	492	6.0	**305L4**	**—**	**BN80B4**	**M2SA4**	22800	26000	43900	52000	16900	290
3.1	2020	1.0	447	6.0	**301L4**	**—**	**BN80B4**	**M2SA4**	6950	6950	23000	25100	5470	256
3.1	2050	1.0	453	10.0	**—**	**301R4**	**BN80B4**	**M2SA4**	6960	6960	23000	25200	5490	258
3.1	2010	1.4	446	6.0	**303L4**	**—**	**BN80B4**	**M2SA4**	22400	25600	43300	51300	16400	266
3.1	2040	1.1	452	12.0	**—**	**303R4**	**BN80B4**	**M2SA4**	22500	25700	43400	51400	16500	268
3.1	2010	1.9	446	6.0	**304L4**	**—**	**BN80B4**	**M2SA4**	22400	25600	43300	51300	16400	278
3.1	2040	1.8	452	12.0	**—**	**304R4**	**BN80B4**	**M2SA4**	22500	25700	43400	51400	16500	280
3.1	2010	2.7	446	6.0	**305L4**	**—**	**BN80B4**	**M2SA4**	22400	25600	43300	51300	16400	290
3.1	2040	2.3	452	12.0	**—**	**305R4**	**BN80B4**	**M2SA4**	22500	25700	43400	51400	16500	292
3.3	1980	1.3	426	7.5	**304L3**	**—**	**BN80B4**	**M2SA4**	22300	25500	43000	51000	16100	278
3.4	1870	1.3	413	6.0	**303L4**	**—**	**BN80B4**	**M2SA4**	22200	25400	42800	50700	16000	266
3.4	1870	1.6	413	6.0	**304L4**	**—**	**BN80B4**	**M2SA4**	22200	25400	42800	50700	16000	278
3.4	1870	1.3	414	12.0	**—**	**304R4**	**BN80B4**	**M2SA4**	22200	25400	42800	50700	16000	280
3.4	1870	2.6	413	6.0	**305L4**	**—**	**BN80B4**	**M2SA4**	22200	25400	42800	50700	16000	290
3.5	1870	1.0	402	7.5	**303L3**	**—**	**BN80B4**	**M2SA4**	22100	25300	42600	50500	15800	266
3.5	1870	2.0	402	6.0	**305L3**	**—**	**BN80B4**	**M2SA4**	22100	25300	42600	50500	15800	290

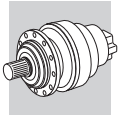

A

P_1 = 0.75 kW

n_2 min^{-1}	M_{n2} Nm	f_S	i	P_t kW					Rn_2 [N] MC	MZ	HC/PC	HZ/PZ	FZ	
3.6	1810	0.9	389	7.5	**303L3**	**—**	**BN80B4**	**M2SA4**	22000	25200	42400	50300	15700	266
3.6	1760	1.1	390	12.0	**—**	**303R4**	**BN80B4**	**M2SA4**	22000	25200	42500	50300	15700	268
3.6	1810	1.8	389	7.5	**305L3**	**—**	**BN80B4**	**M2SA4**	22000	25200	42400	50300	15700	290
3.6	1760	2.1	390	12.0	**—**	**305R4**	**BN80B4**	**M2SA4**	22000	25200	42500	50300	15700	292
3.8	1640	1.4	364	12.0	**—**	**303R4**	**BN80B4**	**M2SA4**	21800	24900	42000	49800	15300	268
3.8	1640	1.8	364	12.0	**—**	**304R4**	**BN80B4**	**M2SA4**	21800	24900	42000	49800	15300	280
3.8	1640	2.8	364	12.0	**—**	**305R4**	**BN80B4**	**M2SA4**	21800	24900	42000	49800	15300	292
3.9	1640	1.2	363	10.0	**—**	**301R4**	**BN80B4**	**M2SA4**	6750	6750	22300	24400	5100	258
4.1	1590	1.5	341	7.5	**304L3**	**—**	**BN80B4**	**M2SA4**	21600	24700	41700	49400	15000	278
4.1	1520	1.6	338	12.0	**—**	**304R4**	**BN80B4**	**M2SA4**	21600	24600	41600	49300	14900	280
4.2	1490	1.3	330	6.0	**301L4**	**—**	**BN80B4**	**M2SA4**	6660	6660	22000	24100	4940	256
4.2	1520	1.5	336	12.0	**—**	**303R4**	**BN80B4**	**M2SA4**	21600	24600	41600	49300	14900	268
4.4	1500	1.3	321	7.5	**303L3**	**—**	**BN80B4**	**M2SA4**	21400	24500	41300	49000	14700	266
4.4	1500	2.5	321	7.5	**305L3**	**—**	**BN80B4**	**M2SA4**	21400	24500	41300	49000	14700	290
4.5	1410	1.3	313	12.0	**—**	**303R4**	**BN80B4**	**M2SA4**	21300	24400	41100	48800	14600	268
4.5	1410	2.6	313	12.0	**—**	**305R4**	**BN80B4**	**M2SA4**	21300	24400	41100	48800	14600	292
4.6	1380	2.5	307	12.0	**—**	**304R4**	**BN80B4**	**M2SA4**	21300	24300	41000	48600	14500	280
4.7	1390	0.9	299	7.5	**301L3**	**—**	**BN80B4**	**M2SA4**	6560	6560	21700	23700	4780	256
4.8	1310	1.5	291	10.0	**—**	**301R4**	**BN80B4**	**M2SA4**	6540	6540	21600	23600	4740	258
4.8	1310	2.0	290	12.0	**—**	**303R4**	**BN80B4**	**M2SA4**	21100	24100	40700	48200	14200	268
4.8	1310	2.8	290	12.0	**—**	**304R4**	**BN80B4**	**M2SA4**	21100	24100	40700	48200	14200	280
5.1	1290	1.7	276	7.5	**303L3**	**—**	**BN80B4**	**M2SA4**	21000	24000	40500	48000	14000	266
5.1	1270	1.9	273	7.5	**304L3**	**—**	**BN80B4**	**M2SA4**	21000	24000	40500	48000	13900	278
5.2	1210	1.6	268	10.0	**—**	**301R4**	**BN80B4**	**M2SA4**	6500	6500	21500	23500	4610	258
5.4	1200	1.5	258	7.5	**303L3**	**—**	**BN80B4**	**M2SA4**	21000	24000	40500	48000	13600	266
5.5	1150	1.6	255	12.0	**—**	**303R4**	**BN80B4**	**M2SA4**	21000	24000	40500	48000	13600	268
5.8	1120	1.2	240	7.5	**301L3**	**—**	**BN80B4**	**M2SA4**	6500	6500	21500	23500	4440	256
5.9	1070	1.2	237	10.0	**—**	**301R4**	**BN80B4**	**M2SA4**	6500	6500	21500	23500	4430	258
6.1	1040	1.8	231	12.0	**—**	**303R4**	**BN80B4**	**M2SA4**	21000	24000	40500	48000	13200	268
6.3	1030	1.7	221	7.5	**301L3**	**—**	**BN80B4**	**M2SA4**	6500	6500	21500	23500	4320	256
6.4	1030	2.2	220	7.5	**303L3**	**—**	**BN80B4**	**M2SA4**	21000	24000	40500	48000	13000	266
6.5	970	0.9	215	10.0	**—**	**300R4**	**BN80B4**	**M2SA4**	6500	6500	21500	25000	4280	248
6.5	970	1.9	215	10.0	**—**	**301R4**	**BN80B4**	**M2SA4**	6500	6500	21500	23500	4280	258
6.5	970	2.8	214	12.0	**—**	**303R4**	**BN80B4**	**M2SA4**	21000	24000	40500	48000	12800	268
6.9	940	2.5	202	7.5	**304L3**	**—**	**BN80B4**	**M2SA4**	21000	24000	40500	48000	12600	278
7.3	890	1.5	192	7.5	**301L3**	**—**	**BN80B4**	**M2SA4**	6500	6500	21500	23500	4130	256
7.4	890	2.1	190	7.5	**303L3**	**—**	**BN80B4**	**M2SA4**	21000	24000	40500	48000	12300	266
7.6	830	2.8	185	12.0	**—**	**303R4**	**BN80B4**	**M2SA4**	21000	24000	40500	48000	12200	268
7.9	820	1.1	177	7.5	**300L3**	**—**	**BN80B4**	**M2SA4**	6500	6500	21500	25000	4020	246
7.9	820	2.2	177	7.5	**301L3**	**—**	**BN80B4**	**M2SA4**	6500	6500	21500	23500	4020	256
7.9	830	2.7	178	7.5	**303L3**	**—**	**BN80B4**	**M2SA4**	21000	24000	40500	48000	12100	266
8.0	790	1.1	175	10.0	**—**	**300R4**	**BN80B4**	**M2SA4**	6500	6500	21500	25000	4000	248
8.0	790	2.3	175	10.0	**—**	**301R4**	**BN80B4**	**M2SA4**	6500	6500	21500	23500	4000	258
8.6	760	2.9	164	7.5	**303L3**	**—**	**BN80B4**	**M2SA4**	21000	24000	40500	48000	11700	266
8.8	720	1.2	159	10.0	**—**	**300R4**	**BN80B4**	**M2SA4**	6500	6500	21500	25000	3870	248
8.8	720	2.5	159	10.0	**—**	**301R4**	**BN80B4**	**M2SA4**	6500	6500	21500	23500	3870	258
9.2	710	2.6	152	7.5	**303L3**	**—**	**BN80B4**	**M2SA4**	21000	24000	40500	48000	11500	266
9.8	650	1.0	143	10.0	**—**	**300R4**	**BN80B4**	**M2SA4**	6500	6500	21500	25000	3740	248
9.8	650	2.0	143	10.0	**—**	**301R4**	**BN80B4**	**M2SA4**	6500	6500	21500	23500	3740	258
9.9	660	1.3	142	7.5	**300L3**	**—**	**BN80B4**	**M2SA4**	6500	6500	21500	25000	3730	246
9.9	660	2.6	142	7.5	**301L3**	**—**	**BN80B4**	**M2SA4**	6500	6500	21500	23500	3730	256
10.5	620	1.9	133	12.0	**—**	**301R3**	**BN80B4**	**M2SA4**	6390	6390	21200	23100	3650	258
10.7	610	1.4	131	7.5	**300L3**	**—**	**BN80B4**	**M2SA4**	6360	6360	21100	24500	3630	246
10.7	610	2.8	131	7.5	**301L3**	**—**	**BN80B4**	**M2SA4**	6360	6360	21100	23000	3630	256
10.8	590	1.5	130	10.0	**—**	**300R4**	**BN80B4**	**M2SA4**	6340	6340	21000	24400	3620	248
10.8	590	2.9	130	10.0	**—**	**301R4**	**BN80B4**	**M2SA4**	6340	6340	21000	23000	3620	258
12.1	540	1.2	116	7.5	**300L3**	**—**	**BN80B4**	**M2SA4**	6100	6100	20300	23600	3490	246
12.1	540	2.4	116	7.5	**301L3**	**—**	**BN80B4**	**M2SA4**	6100	6100	20300	22200	3490	256
13.2	500	1.3	106	12.0	**—**	**300R3**	**BN80B4**	**M2SA4**	5930	5930	19800	23000	3390	248
13.2	480	1.8	106	10.0	**—**	**300R4**	**BN80B4**	**M2SA4**	5920	5920	19800	23000	3380	248
13.2	500	2.6	106	12.0	**—**	**301R3**	**BN80B4**	**M2SA4**	5930	5930	19800	21600	3390	258
13.4	490	1.8	105	7.5	**300L3**	**—**	**BN80B4**	**M2SA4**	5900	5900	19700	22900	3370	246
16.4	400	2.1	85.6	7.5	**300L3**	**—**	**BN80B4**	**M2SA4**	5520	5520	18500	21600	3150	246
16.4	400	1.6	85.2	12.0	**—**	**300R3**	**BN80B4**	**M2SA4**	5510	5510	18500	21500	3150	248
17.8	370	2.3	78.7	12.0	**—**	**300R3**	**BN80B4**	**M2SA4**	5360	5360	18100	21000	3060	248

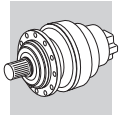

P_1 = 0.75 kW

n_2 min^{-1}	M_{n2} Nm	f_S	i	P_t kW					Rn_2 [N] MC	MZ	HC/PC	HZ/PZ	FZ	
18.1	360	2.4	77.5	7.5	**300L3**	**—**	**BN80B4**	**M2SA4**	5340	5340	18000	20900	3050	246
20.0	330	2.0	69.9	7.5	**300L3**	**—**	**BN80B4**	**M2SA4**	5160	5160	17500	20300	2950	246
20.5	320	2.0	68.2	12.0	**—**	**300R3**	**BN80B4**	**M2SA4**	5120	5120	17300	20200	2920	248
21.6	310	1.8	64.8	7.5	**300L2**	**—**	**BN80B4**	**M2SA4**	5030	5030	17100	19800	2870	246
22.1	290	2.9	63.2	7.5	**300L3**	**—**	**BN80B4**	**M2SA4**	4990	4990	16900	19700	2850	246
22.2	290	2.9	62.9	12.0	**—**	**300R3**	**BN80B4**	**M2SA4**	4980	4980	16900	19700	2840	248
27.0	250	2.6	51.9	7.5	**300L2**	**—**	**BN80B4**	**M2SA4**	4670	4670	16000	18600	2670	246

A

P_1 = 1.1 kW

n_2 min^{-1}	M_{n2} Nm	f_S	i	P_t kW					Rn_2 [N] MC	MZ	HC/PC	HZ/PZ	FZ	
0.55	17000	1.4	2523	11.0	**310ML4**	**—**	**BN90S4**	**—**	—	—	106900	135500	65000	338
0.57	16300	1.0	2423	7.5	**309L4**	**—**	**BN90S4**	**—**	—	—	94000	121000	36000	326
0.64	14700	2.7	2187	11.0	**313ML4**	**—**	**BN90S4**	**—**	—	—	190700	223400	80000	362
0.66	14100	2.6	2096	11.0	**311ML4**	**—**	**BN90S4**	**—**	—	—	130800	133500	65000	350
0.68	13700	1.0	2041	7.5	**307L4**	**—**	**BN90S4**	**M2SB4**	39900	49900	89700	118100	45000	314
0.69	13500	1.3	2003	7.5	**309L4**	**—**	**BN90S4**	**—**	—	—	91500	117700	36000	326
0.69	13600	1.8	2022	11.0	**310ML4**	**—**	**BN90S4**	**—**	—	—	103600	131300	65000	338
0.77	12100	2.0	1794	11.0	**310ML4**	**—**	**BN90S4**	**—**	—	—	101800	129100	65000	338
0.79	11900	1.3	1767	7.5	**307L4**	**—**	**BN90S4**	**M2SB4**	39100	48800	87900	115700	45000	314
0.81	11600	1.5	1723	7.5	**309L4**	**—**	**BN90S4**	**—**	—	—	89500	115200	36000	326
0.83	11200	2.1	1672	11.0	**310ML4**	**—**	**BN90S4**	**—**	—	—	100800	127800	65000	338
0.87	10700	1.4	1591	7.5	**307L4**	**—**	**BN90S4**	**M2SB4**	38500	48100	86600	113900	45000	314
0.87	10800	1.6	1605	7.5	**309L4**	**—**	**BN90S4**	**—**	—	—	88600	114100	36000	326
0.94	9920	1.0	1475	6.0	**306L4**	**—**	**BN90S4**	**M2SB4**	31700	36200	72300	83500	35000	302
0.97	9670	2.5	1438	11.0	**310ML4**	**—**	**BN90S4**	**—**	—	—	98600	125100	65000	338
0.99	9480	1.7	1408	7.5	**307L4**	**—**	**BN90S4**	**M2SB4**	37800	47300	85100	112000	45000	314
1.0	9290	1.8	1380	7.5	**309L4**	**—**	**BN90S4**	**—**	—	—	86800	111600	35900	326
1.1	8610	1.0	1279	6.0	**306L4**	**—**	**BN90S4**	**M2SB4**	31100	35400	70900	81800	34000	302
1.1	8570	1.4	1274	7.5	**307L4**	**—**	**BN90S4**	**M2SB4**	37300	46600	83900	110400	43700	314
1.1	8650	1.9	1286	7.5	**309L4**	**—**	**BN90S4**	**—**	—	—	85900	110500	35100	326
1.1	8470	2.9	1259	11.0	**310ML4**	**—**	**BN90S4**	**—**	—	—	96800	122700	62900	338
1.2	7780	1.8	1157	7.5	**307L4**	**—**	**BN90S4**	**M2SB4**	36800	46000	82700	108900	42300	314
1.2	7730	2.1	1149	7.5	**309L4**	**—**	**BN90S4**	**—**	—	—	84500	108800	33800	326
1.3	7360	1.1	1095	6.0	**306L4**	**—**	**BN90S4**	**M2SB4**	30400	34700	69300	80000	32300	302
1.4	6830	1.4	1015	6.0	**306L4**	**—**	**BN90S4**	**M2SB4**	30100	34300	68600	79200	31500	302
1.4	6720	2.1	999	7.5	**307L4**	**—**	**BN90S4**	**M2SB4**	36000	45000	81000	106600	40300	314
1.4	6720	2.7	999	7.5	**309L4**	**—**	**BN90S4**	**—**	—	—	82800	106600	32200	326
1.5	6100	2.5	906	7.5	**307L4**	**—**	**BN90S4**	**M2SB4**	35500	44400	79900	105100	39000	314
1.5	6100	3.0	906	7.5	**309L4**	**—**	**BN90S4**	**—**	—	—	81700	105100	31200	326
1.6	5900	1.3	877	6.0	**306L4**	**—**	**BN90S4**	**M2SB4**	29500	33600	67200	77500	30000	302
1.7	5490	1.0	816	6.0	**305L4**	**—**	**BN90S4**	**M2SB4**	24500	28000	47200	56000	20100	290
1.7	5440	1.4	809	6.0	**306L4**	**—**	**BN90S4**	**M2SB4**	29100	33200	66400	76600	29200	302
1.7	5590	1.1	830	12.0	**—**	**306R4**	**BN90S4**	**M2SB4**	29200	33300	66600	76900	29500	304
1.7	5390	2.5	801	7.5	**307L4**	**—**	**BN90S4**	**M2SB4**	34900	43600	78500	103300	37400	314
2.0	4710	2.0	700	6.0	**306L4**	**—**	**BN90S4**	**M2SB4**	28500	32500	65000	75100	27800	302
2.0	4640	2.1	690	15.0	**—**	**307R4**	**BN90S4**	**M2SB4**	34200	42700	76900	101100	35600	316
2.1	4370	1.0	649	6.0	**305L4**	**—**	**BN90S4**	**M2SB4**	23700	27100	45700	54200	18600	290
2.1	4430	0.9	659	12.0	**—**	**305R4**	**BN90S4**	**M2SB4**	23800	27100	45800	54300	18700	292
2.1	4480	1.4	665	12.0	**—**	**306R4**	**BN90S4**	**M2SB4**	28300	32300	64600	74500	27400	304
2.1	4400	3.0	654	7.5	**307L4**	**—**	**BN90S4**	**M2SB4**	33900	42400	76300	100300	35000	314
2.2	4280	2.2	636	6.0	**306L4**	**—**	**BN90S4**	**M2SB4**	28100	32100	64100	74100	27000	302
2.4	3970	2.4	589	6.0	**306L4**	**—**	**BN90S4**	**M2SB4**	27800	31700	63500	73300	26300	302
2.4	3970	2.2	590	12.0	**—**	**306R4**	**BN90S4**	**M2SB4**	27800	31700	63500	73300	26300	304
2.5	3740	1.0	556	6.0	**304L4**	**—**	**BN90S4**	**M2SB4**	23200	26500	44700	53000	17700	278
2.5	3740	1.5	556	6.0	**305L4**	**—**	**BN90S4**	**M2SB4**	23200	26500	44700	53000	17700	290
2.5	3810	1.3	567	12.0	**—**	**305R4**	**BN90S4**	**M2SB4**	23200	26600	44800	53100	17800	292
2.5	3700	2.0	550	12.0	**—**	**306R4**	**BN90S4**	**M2SB4**	27600	31400	62800	72500	25700	304
2.6	3550	1.1	528	12.0	**—**	**305R4**	**BN90S4**	**M2SB4**	23000	26300	44400	52600	17400	292
2.7	3430	2.8	509	6.0	**306L4**	**—**	**BN90S4**	**M2SB4**	27300	31100	62100	71700	25000	302
2.8	3310	1.1	492	6.0	**304L4**	**—**	**BN90S4**	**M2SB4**	22800	26000	43900	52100	17000	278

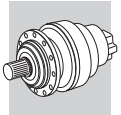

A

P_1 = 1.1 kW

n_2 min^{-1}	M_{n2} Nm	f_S	i	P_t kW					Rn_2 [N] MC	MZ	HC/PC	HZ/PZ	FZ	
2.8	3310	1.6	492	6.0	**305L4**	**—**	**BN90S4**	**M2SB4**	22800	26000	43900	52100	17000	290
2.8	3280	2.8	488	12.0	**—**	**306R4**	**BN90S4**	**M2SB4**	27100	30900	61800	71300	24700	304
2.8	3300	2.9	490	15.0	**—**	**307R4**	**BN90S4**	**M2SB4**	32500	40700	73200	96300	31800	316
3.1	3000	0.9	446	6.0	**303L4**	**—**	**BN90S4**	**M2SB4**	22500	25700	43300	51300	16400	266
3.1	3000	1.2	446	6.0	**304L4**	**—**	**BN90S4**	**M2SB4**	22500	25700	43300	51300	16400	278
3.1	3040	1.2	452	12.0	**—**	**304R4**	**BN90S4**	**M2SB4**	22500	25700	43400	51400	16500	280
3.1	3000	1.8	446	6.0	**305L4**	**—**	**BN90S4**	**M2SB4**	22500	25700	43300	51300	16400	290
3.1	3040	1.6	452	12.0	**—**	**305R4**	**BN90S4**	**M2SB4**	22500	25700	43400	51400	16500	292
3.1	3060	2.3	455	12.0	**—**	**306R4**	**BN90S4**	**M2SB4**	26800	30600	61100	70600	24100	304
3.4	2780	1.1	413	6.0	**304L4**	**—**	**BN90S4**	**M2SB4**	22200	25400	42900	50800	16000	278
3.4	2780	1.7	413	6.0	**305L4**	**—**	**BN90S4**	**M2SB4**	22200	25400	42900	50800	16000	290
3.4	2810	2.0	405	7.5	**306L3**	**—**	**BN90S4**	**M2SB4**	26400	30100	60100	69400	23200	302
3.5	2790	1.4	402	6.0	**305L3**	**—**	**BN90S4**	**M2SB4**	22100	25300	42700	50600	15900	290
3.6	2700	1.2	389	7.5	**305L3**	**—**	**BN90S4**	**M2SB4**	22000	25200	42500	50400	15700	290
3.6	2620	1.4	390	12.0	**—**	**305R4**	**BN90S4**	**M2SB4**	22000	25200	42500	50400	15700	292
3.6	2630	2.6	391	6.0	**306L4**	**—**	**BN90S4**	**M2SB4**	26200	29900	59800	69100	22900	302
3.6	2620	2.9	389	12.0	**—**	**306R4**	**BN90S4**	**M2SB4**	26200	29900	59800	69000	22900	304
3.8	2450	1.0	364	12.0	**—**	**303R4**	**BN90S4**	**M2SB4**	21800	24900	42100	49900	15400	268
3.8	2450	1.2	364	12.0	**—**	**304R4**	**BN90S4**	**M2SB4**	21800	24900	42100	49900	15400	280
3.8	2450	1.9	364	12.0	**—**	**305R4**	**BN90S4**	**M2SB4**	21800	24900	42100	49900	15400	292
4.1	2260	1.0	336	12.0	**—**	**303R4**	**BN90S4**	**M2SB4**	21600	24700	41600	49300	14900	268
4.1	2370	1.0	341	7.5	**304L3**	**—**	**BN90S4**	**M2SB4**	21600	24700	41700	49400	15000	278
4.1	2270	1.1	338	12.0	**—**	**304R4**	**BN90S4**	**M2SB4**	21600	24700	41600	49300	15000	280
4.1	2260	2.0	336	12.0	**—**	**305R4**	**BN90S4**	**M2SB4**	21600	24700	41600	49300	14900	292
4.3	2230	1.7	321	7.5	**305L3**	**—**	**BN90S4**	**M2SB4**	21400	24500	41300	49000	14700	290
4.3	2250	2.5	325	7.5	**306L3**	**—**	**BN90S4**	**M2SB4**	25600	29100	58300	67300	21600	302
4.4	2100	1.7	313	12.0	**—**	**305R4**	**BN90S4**	**M2SB4**	21400	24400	41200	48800	14600	292
4.5	2060	1.7	307	12.0	**—**	**304R4**	**BN90S4**	**M2SB4**	21300	24300	41100	48700	14500	280
4.8	1960	1.0	291	10.0	**—**	**301R4**	**BN90S4**	**M2SB4**	6540	6540	21600	23700	4750	258
4.8	1950	1.4	290	12.0	**—**	**303R4**	**BN90S4**	**M2SB4**	21100	24100	40700	48300	14200	268
4.8	1950	1.9	290	12.0	**—**	**304R4**	**BN90S4**	**M2SB4**	21100	24100	40700	48300	14200	280
4.8	1950	2.7	290	12.0	**—**	**305R4**	**BN90S4**	**M2SB4**	21100	24100	40700	48300	14200	292
4.8	2000	2.8	288	7.5	**306L3**	**—**	**BN90S4**	**M2SB4**	25100	28600	57300	66100	20700	302
5.0	1920	1.2	276	7.5	**303L3**	**—**	**BN90S4**	**M2SB4**	21000	24000	40500	48000	14000	266
5.0	1920	2.3	276	7.5	**305L3**	**—**	**BN90S4**	**M2SB4**	21000	24000	40500	48000	14000	290
5.1	1890	1.3	273	7.5	**304L3**	**—**	**BN90S4**	**M2SB4**	21000	24000	40500	48000	14000	278
5.2	1800	1.0	268	10.0	**—**	**301R4**	**BN90S4**	**M2SB4**	6500	6500	21500	23500	4620	258
5.2	1800	2.0	267	12.0	**—**	**304R4**	**BN90S4**	**M2SB4**	21000	24000	40500	48000	13900	280
5.2	1860	3.0	268	7.5	**306L3**	**—**	**BN90S4**	**M2SB4**	25000	28500	57000	65800	20200	302
5.4	1790	1.0	258	7.5	**303L3**	**—**	**BN90S4**	**M2SB4**	21000	24000	40500	48000	13700	266
5.4	1720	1.1	255	12.0	**—**	**303R4**	**BN90S4**	**M2SB4**	21000	24000	40500	48000	13600	268
5.4	1790	2.0	258	7.5	**305L3**	**—**	**BN90S4**	**M2SB4**	21000	24000	40500	48000	13700	290
5.4	1720	2.1	255	12.0	**—**	**305R4**	**BN90S4**	**M2SB4**	21000	24000	40500	48000	13600	292
6.0	1550	1.2	231	12.0	**—**	**303R4**	**BN90S4**	**M2SB4**	21000	24000	40500	48000	13200	268
6.0	1550	2.3	231	12.0	**—**	**305R4**	**BN90S4**	**M2SB4**	21000	24000	40500	48000	13200	292
6.1	1520	2.3	227	12.0	**—**	**304R4**	**BN90S4**	**M2SB4**	21000	24000	40500	48000	13100	280
6.3	1530	1.2	221	7.5	**301L3**	**—**	**BN90S4**	**M2SB4**	6500	6500	21500	23500	4330	256
6.3	1530	1.5	220	7.5	**303L3**	**—**	**BN90S4**	**M2SB4**	21000	24000	40500	48000	13000	266
6.3	1530	2.4	220	7.5	**304L3**	**—**	**BN90S4**	**M2SB4**	21000	24000	40500	48000	13000	278
6.5	1450	1.3	215	10.0	**—**	**301R4**	**BN90S4**	**M2SB4**	6500	6500	21500	23500	4290	258
6.5	1440	1.9	214	12.0	**—**	**303R4**	**BN90S4**	**M2SB4**	21000	24000	40500	48000	12900	268
6.5	1440	2.5	214	12.0	**—**	**304R4**	**BN90S4**	**M2SB4**	21000	24000	40500	48000	12900	280
6.9	1400	1.7	202	7.5	**304L3**	**—**	**BN90S4**	**M2SB4**	21000	24000	40500	48000	12600	278
7.2	1330	1.0	192	7.5	**301L3**	**—**	**BN90S4**	**M2SB4**	6500	6500	21500	23500	4140	256
7.3	1320	1.4	190	7.5	**303L3**	**—**	**BN90S4**	**M2SB4**	21000	24000	40500	48000	12400	266
7.3	1320	2.7	190	7.5	**305L3**	**—**	**BN90S4**	**M2SB4**	21000	24000	40500	48000	12400	290
7.5	1240	1.9	185	12.0	**—**	**303R4**	**BN90S4**	**M2SB4**	21000	24000	40500	48000	12300	268
7.5	1240	2.8	185	12.0	**—**	**304R4**	**BN90S4**	**M2SB4**	21000	24000	40500	48000	12300	280
7.8	1230	1.5	177	7.5	**301L3**	**—**	**BN90S4**	**M2SB4**	6500	6500	21500	23500	4030	256
7.8	1230	1.8	178	7.5	**303L3**	**—**	**BN90S4**	**M2SB4**	21000	24000	40500	48000	12100	266
7.8	1230	2.3	178	7.5	**304L3**	**—**	**BN90S4**	**M2SB4**	21000	24000	40500	48000	12100	278
7.9	1180	1.5	175	10.0	**—**	**301R4**	**BN90S4**	**M2SB4**	6500	6500	21500	23500	4010	258
8.4	1140	2.1	165	7.5	**304L3**	**—**	**BN90S4**	**M2SB4**	21000	24000	40500	48000	11800	278
8.5	1140	1.9	164	7.5	**303L3**	**—**	**BN90S4**	**M2SB4**	21000	24000	40500	48000	11800	266
8.8	1070	1.6	159	10.0	**—**	**301R4**	**BN90S4**	**M2SB4**	6500	6500	21500	23500	3880	258

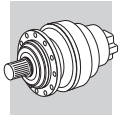

A

P_1 = 1.1 kW

n_2 min^{-1}	M_{n2} Nm	f_S	i	P_t kW					Rn_2 [N] MC	MZ	HC/PC	HZ/PZ	FZ	
8.8	1070	2.5	158	12.0	—	**303R4**	**BN90S4**	**M2SB4**	21000	24000	40500	48000	11600	268
9.1	1060	1.7	152	7.5	**303L3**	—	**BN90S4**	**M2SB4**	21000	24000	40500	48000	11500	266
9.4	1000	2.3	148	12.0	—	**303R4**	**BN90S4**	**M2SB4**	21000	24000	40500	48000	11400	268
9.7	960	1.3	143	10.0	—	**301R4**	**BN90S4**	**M2SB4**	6500	6500	21500	23500	3750	258
9.8	980	1.8	142	7.5	**301L3**	—	**BN90S4**	**M2SB4**	6500	6500	21500	23500	3740	256
9.8	980	2.7	141	7.5	**303L3**	—	**BN90S4**	**M2SB4**	21000	24000	40500	48000	11200	266
10.5	920	1.2	133	12.0	—	**301R3**	**BN90S4**	**M2SB4**	6400	6400	21200	23200	3660	258
10.6	910	0.9	131	7.5	**300L3**	—	**BN90S4**	**M2SB4**	6370	6370	21100	24600	3640	246
10.6	910	1.9	131	7.5	**301L3**	—	**BN90S4**	**M2SB4**	6370	6370	21100	23100	3640	256
10.7	870	1.0	130	10.0	—	**300R4**	**BN90S4**	**M2SB4**	6350	6350	21100	24500	3630	248
10.7	870	2.0	130	10.0	—	**301R4**	**BN90S4**	**M2SB4**	6350	6350	21100	23000	3630	258
11.2	860	2.1	124	7.5	**303L3**	—	**BN90S4**	**M2SB4**	20200	23100	39200	46400	10700	266
11.5	840	2.8	121	14.0	—	**304R3**	**BN90S4**	**M2SB4**	20100	22900	38900	46100	10600	280
12.0	800	1.6	116	7.5	**301L3**	—	**BN90S4**	**M2SB4**	6120	6120	20400	22200	3490	256
12.2	790	2.3	114	14.0	—	**303R3**	**BN90S4**	**M2SB4**	19700	22500	38200	45300	10400	268
12.3	780	2.3	113	7.5	**303L3**	—	**BN90S4**	**M2SB4**	19600	22400	38000	45100	10400	266
13.1	710	1.2	106	10.0	—	**300R4**	**BN90S4**	**M2SB4**	5940	5940	19800	23000	3390	248
13.1	740	1.8	106	12.0	—	**301R3**	**BN90S4**	**M2SB4**	5950	5950	19800	21700	3400	258
13.1	710	2.4	106	10.0	—	**301R4**	**BN90S4**	**M2SB4**	5940	5940	19800	21700	3390	258
13.3	730	1.2	105	7.5	**300L3**	—	**BN90S4**	**M2SB4**	5920	5920	19800	23000	3380	246
13.3	730	2.3	105	7.5	**301L3**	—	**BN90S4**	**M2SB4**	5920	5920	19800	21600	3380	256
15.2	630	2.9	91.5	14.0	—	**303R3**	**BN90S4**	**M2SB4**	18300	20900	35700	42300	9690	268
16.2	590	1.4	85.6	7.5	**300L3**	—	**BN90S4**	**M2SB4**	5530	5530	18600	21600	3160	246
16.2	590	2.8	85.6	7.5	**301L3**	—	**BN90S4**	**M2SB4**	5530	5530	18600	20300	3160	256
16.3	590	1.1	85.2	12.0	—	**300R3**	**BN90S4**	**M2SB4**	5520	5520	18600	21600	3150	248
16.3	590	2.2	85.2	12.0	—	**301R3**	**BN90S4**	**M2SB4**	5520	5520	18600	20300	3150	258
17.7	550	1.6	78.7	12.0	—	**300R3**	**BN90S4**	**M2SB4**	5380	5380	18100	21100	3070	248
17.7	550	2.9	78.7	12.0	—	**301R3**	**BN90S4**	**M2SB4**	5380	5380	18100	19800	3070	258
17.9	540	1.6	77.5	7.5	**300L3**	—	**BN90S4**	**M2SB4**	5350	5350	18000	21000	3060	246
19.9	480	1.3	69.9	7.5	**300L3**	—	**BN90S4**	**M2SB4**	5170	5170	17500	20300	2950	246
19.9	480	2.7	69.9	7.5	**301L3**	—	**BN90S4**	**M2SB4**	5170	5170	17500	19100	2950	256
20.4	470	1.4	68.2	12.0	—	**300R3**	**BN90S4**	**M2SB4**	5130	5130	17400	20200	2930	248
20.4	470	2.7	68.2	12.0	—	**301R3**	**BN90S4**	**M2SB4**	5130	5130	17400	19000	2930	258
21.5	460	1.2	64.8	7.5	**300L2**	—	**BN90S4**	**M2SB4**	5040	5040	17100	19900	2880	246
21.5	460	2.5	64.8	7.5	**301L2**	—	**BN90S4**	**M2SB4**	5040	5040	17100	18700	2880	256
22.0	440	1.9	63.2	7.5	**300L3**	—	**BN90S4**	**M2SB4**	5000	5000	17000	19700	2860	246
22.1	440	1.9	62.9	12.0	—	**300R3**	**BN90S4**	**M2SB4**	4990	4990	17000	19700	2850	248
26.8	370	1.8	51.9	7.5	**300L2**	—	**BN90S4**	**M2SB4**	4680	4680	16000	18600	2670	246
26.9	360	2.4	51.6	7.5	**300L3**	—	**BN90S4**	**M2SB4**	4670	4670	16000	18600	2670	246
27.6	350	2.4	50.4	12.0	—	**300R3**	**BN90S4**	**M2SB4**	4640	4640	15900	18400	2650	248
33	300	2.2	41.5	7.5	**300L2**	—	**BN90S4**	**M2SB4**	4350	4350	15000	17400	2480	246
34	290	2.3	41.2	12.0	—	**300R3**	**BN90S4**	**M2SB4**	4330	4330	14900	17400	2470	248
42	240	2.7	33.3	7.5	**300L2**	—	**BN90S4**	**M2SB4**	4040	4040	14000	16300	2310	246
75	130	2.8	18.5	12.0	—	**300R2**	**BN90S4**	**M2SB4**	3320	3320	11700	13600	1890	248

P_1 = 1.5 kW

n_2 min^{-1}	M_{n2} Nm	f_S	i	P_t kW					Rn_2 [N] MC	MZ	HC/PC	HZ/PZ	FZ	
0.56	22800	1.1	2523	11.0	**310ML4**	—	**BN90LA4**	—	—	—	106700	135300	65000	338
0.64	19700	2.0	2187	11.0	**313ML4**	—	**BN90LA4**	—	—	—	190300	223000	80000	362
0.67	18900	1.9	2096	11.0	**311ML4**	—	**BN90LA4**	—	—	—	130500	133200	65000	350
0.70	18100	0.9	2003	7.5	**309L4**	—	**BN90LA4**	—	—	—	91300	117500	36000	326
0.70	18300	1.3	2022	11.0	**310ML4**	—	**BN90LA4**	—	—	—	103400	131000	65000	338
0.79	16200	1.5	1794	11.0	**310ML4**	—	**BN90LA4**	—	—	—	101600	128800	65000	338
0.80	16000	1.0	1767	7.5	**307L4**	—	**BN90LA4**	**M3SA4**	39000	48700	87700	115400	45000	314
0.80	16000	2.6	1766	11.0	**311ML4**	—	**BN90LA4**	—	—	—	127400	130000	65000	350
0.82	15600	1.1	1723	7.5	**309L4**	—	**BN90LA4**	—	—	—	89400	115000	36000	326
0.84	15100	1.6	1672	11.0	**310ML4**	—	**BN90LA4**	—	—	—	100600	127500	65000	338
0.84	15200	2.4	1680	11.0	**311ML4**	—	**BN90LA4**	—	—	—	126500	129000	65000	350
0.88	14500	1.2	1605	7.5	**309L4**	—	**BN90LA4**	—	—	—	88500	113800	36000	326
0.89	14400	1.0	1591	7.5	**307L4**	—	**BN90LA4**	**M3SA4**	38400	48000	86400	113700	45000	314

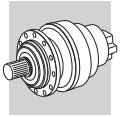

A

P_1 = 1.5 kW

n_2 min^{-1}	M_{n2} Nm	f_S	i	P_t kW					Rn_2 [N] MC	MZ	HC/PC	HZ/PZ	FZ	
0.98	13000	1.8	1438	11.0	**310ML4**	**—**	**BN90LA4**	**—**	—	—	98400	124800	65000	338
1.0	12700	1.2	1408	7.5	**307L4**	**—**	**BN90LA4**	**M3SA4**	37700	47200	84900	111700	45000	314
1.0	12500	1.4	1380	7.5	**309L4**	**—**	**BN90LA4**	**—**	—	—	86600	111400	35700	326
1.1	11500	1.1	1274	7.5	**307L4**	**—**	**BN90LA4**	**M3SA4**	37200	46500	83700	110200	43500	314
1.1	11600	1.4	1286	7.5	**309L4**	**—**	**BN90LA4**	**—**	—	—	85700	110300	34900	326
1.1	11400	2.2	1259	11.0	**310ML4**	**—**	**BN90LA4**	**—**	—	—	96600	122500	62600	338
1.2	10400	1.4	1157	7.5	**307L4**	**—**	**BN90LA4**	**M3SA4**	36700	45900	82600	108600	42100	314
1.2	10400	1.6	1149	7.5	**309L4**	**—**	**BN90LA4**	**—**	—	—	84300	108500	33600	326
1.2	10500	2.8	1164	11.0	**310ML4**	**—**	**BN90LA4**	**—**	—	—	95500	121100	61000	338
1.4	9170	1.0	1015	6.0	**306L4**	**—**	**BN90LA4**	**M3SA4**	30000	34200	68400	79000	31400	302
1.4	9020	1.6	999	7.5	**307L4**	**—**	**BN90LA4**	**M3SA4**	35900	44900	80900	106400	40100	314
1.4	9020	2.0	999	7.5	**309L4**	**—**	**BN90LA4**	**—**	—	—	82700	106400	32100	326
1.6	7920	1.0	877	6.0	**306L4**	**—**	**BN90LA4**	**M3SA4**	29400	33500	67000	77400	29900	302
1.6	8180	1.9	906	7.5	**307L4**	**—**	**BN90LA4**	**M3SA4**	35400	44300	79800	104900	38800	314
1.6	8180	2.2	906	7.5	**309L4**	**—**	**BN90LA4**	**—**	—	—	81500	104900	31100	326
1.6	8110	2.7	898	15.0	**—**	**310MR4**	**BN90LA4**	**—**	—	—	92000	116700	55900	340
1.7	7300	1.1	809	6.0	**306L4**	**—**	**BN90LA4**	**M3SA4**	29100	33100	66300	76500	29100	302
1.8	7230	1.9	801	7.5	**307L4**	**—**	**BN90LA4**	**M3SA4**	34800	43500	78400	103100	37300	314
1.8	7230	2.5	801	7.5	**309L4**	**—**	**BN90LA4**	**—**	—	—	80100	103100	29800	326
2.0	6320	1.5	700	6.0	**306L4**	**—**	**BN90LA4**	**M3SA4**	28500	32500	64900	74900	27700	302
2.0	6520	2.3	722	7.5	**307L4**	**—**	**BN90LA4**	**M3SA4**	34300	42900	77200	101600	36000	314
2.0	6230	1.6	690	15.0	**—**	**307R4**	**BN90LA4**	**M3SA4**	34100	42600	76700	100900	35500	316
2.0	6230	2.4	690	15.0	**—**	**309R4**	**BN90LA4**	**—**	—	—	78400	100900	28400	328
2.1	6010	1.0	665	12.0	**—**	**306R4**	**BN90LA4**	**M3SA4**	28300	32200	64400	74400	27200	304
2.2	5740	1.6	636	6.0	**306L4**	**—**	**BN90LA4**	**M3SA4**	28100	32000	64000	73900	26800	302
2.2	5900	2.2	654	7.5	**307L4**	**—**	**BN90LA4**	**M3SA4**	33800	42300	76100	100100	34800	314
2.4	5320	1.8	589	6.0	**306L4**	**—**	**BN90LA4**	**M3SA4**	27800	31700	63300	73100	26200	302
2.4	5330	1.6	590	12.0	**—**	**306R4**	**BN90LA4**	**M3SA4**	27800	31700	63300	73100	26200	304
2.4	5230	2.9	579	7.5	**307L4**	**—**	**BN90LA4**	**M3SA4**	33200	41600	74800	98400	33400	314
2.4	5250	2.4	581	15.0	**—**	**307R4**	**BN90LA4**	**M3SA4**	33300	41600	74800	98500	33500	316
2.5	5020	1.1	556	6.0	**305L4**	**—**	**BN90LA4**	**M3SA4**	23100	26400	44600	52900	17600	290
2.5	5120	1.0	567	12.0	**—**	**305R4**	**BN90LA4**	**M3SA4**	23200	26500	44700	53000	17700	292
2.6	4970	1.5	550	12.0	**—**	**306R4**	**BN90LA4**	**M3SA4**	27500	31400	62700	72400	25600	304
2.8	4600	2.1	509	6.0	**306L4**	**—**	**BN90LA4**	**M3SA4**	27200	31000	62000	71600	24900	302
2.9	4450	1.2	492	6.0	**305L4**	**—**	**BN90LA4**	**M3SA4**	22700	26000	43900	52000	16900	290
2.9	4410	2.1	488	12.0	**—**	**306R4**	**BN90LA4**	**M3SA4**	27000	30800	61600	71200	24600	304
2.9	4430	2.1	490	15.0	**—**	**307R4**	**BN90LA4**	**M3SA4**	32500	40600	73100	96100	31600	316
3.0	4200	2.9	465	7.5	**307L4**	**—**	**BN90LA4**	**M3SA4**	32200	40300	72500	95400	31100	314
3.1	4080	0.9	452	12.0	**—**	**304R4**	**BN90LA4**	**M3SA4**	22500	25700	43300	51300	16400	280
3.1	4080	1.2	452	12.0	**—**	**305R4**	**BN90LA4**	**M3SA4**	22500	25700	43300	51300	16400	292
3.1	4110	1.7	455	12.0	**—**	**306R4**	**BN90LA4**	**M3SA4**	26800	30500	61000	70400	24000	304
3.2	4020	0.9	446	6.0	**304L4**	**—**	**BN90LA4**	**M3SA4**	22400	25600	43200	51200	16300	278
3.2	4020	1.4	446	6.0	**305L4**	**—**	**BN90LA4**	**M3SA4**	22400	25600	43200	51200	16300	290
3.2	4010	2.5	444	6.0	**306L4**	**—**	**BN90LA4**	**M3SA4**	26700	30400	60800	70200	23800	302
3.4	3730	1.3	413	6.0	**305L4**	**—**	**BN90LA4**	**M3SA4**	22200	25300	42800	50700	15900	290
3.4	3790	2.3	420	12.0	**—**	**306R4**	**BN90LA4**	**M3SA4**	26500	30200	60300	69600	23400	304
3.5	3740	1.0	402	6.0	**305L3**	**—**	**BN90LA4**	**M3SA4**	22100	25200	42600	50500	15800	290
3.5	3770	1.5	405	7.5	**306L3**	**—**	**BN90LA4**	**M3SA4**	26300	30000	60000	69300	23100	302
3.6	3520	1.1	390	12.0	**—**	**305R4**	**BN90LA4**	**M3SA4**	22000	25100	42400	50300	15600	292
3.6	3530	2.0	391	6.0	**306L4**	**—**	**BN90LA4**	**M3SA4**	26200	29900	59700	68900	22800	302
3.6	3510	2.2	389	12.0	**—**	**306R4**	**BN90LA4**	**M3SA4**	26200	29800	59700	68900	22800	304
3.9	3290	0.9	364	12.0	**—**	**304R4**	**BN90LA4**	**M3SA4**	21800	24900	42000	49800	15300	280
3.9	3290	1.4	364	12.0	**—**	**305R4**	**BN90LA4**	**M3SA4**	21800	24900	42000	49800	15300	292
4.2	3030	1.5	336	12.0	**—**	**305R4**	**BN90LA4**	**M3SA4**	21500	24600	41500	49200	14900	292
4.2	3130	2.8	336	11.0	**307L3**	**—**	**BN90LA4**	**M3SA4**	30800	38500	69200	91100	27900	314
4.3	3020	1.8	325	7.5	**306L3**	**—**	**BN90LA4**	**M3SA4**	25500	29100	58200	67100	21400	302
4.4	2990	1.2	321	7.5	**305L3**	**—**	**BN90LA4**	**M3SA4**	21400	24500	41300	48900	14700	290
4.5	2820	1.3	313	12.0	**—**	**305R4**	**BN90LA4**	**M3SA4**	21300	24400	41100	48700	14500	292
4.5	2810	2.7	312	12.0	**—**	**306R4**	**BN90LA4**	**M3SA4**	25400	28900	57800	66700	21200	304
4.6	2770	1.3	307	12.0	**—**	**304R4**	**BN90LA4**	**M3SA4**	21300	24300	41000	48600	14400	280
4.9	2620	1.0	290	12.0	**—**	**303R4**	**BN90LA4**	**M3SA4**	21100	24100	40700	48200	14200	268
4.9	2620	1.4	290	12.0	**—**	**304R4**	**BN90LA4**	**M3SA4**	21100	24100	40700	48200	14200	280
4.9	2620	2.0	290	12.0	**—**	**305R4**	**BN90LA4**	**M3SA4**	21100	24100	40700	48200	14200	292
4.9	2680	2.1	288	7.5	**306L3**	**—**	**BN90LA4**	**M3SA4**	25100	28600	57200	66000	20600	302
5.1	2570	1.7	276	7.5	**305L3**	**—**	**BN90LA4**	**M3SA4**	21000	24000	40500	48000	13900	290

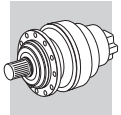

P_1 = 1.5 kW

n_2 min^{-1}	M_{n2} Nm	f_S	i	P_t kW					Rn_2 [N] MC	MZ	HC/PC	HZ/PZ	FZ	
5.2	2540	0.9	273	7.5	**304L3**	**—**	**BN90LA4**	**M3SA4**	21000	24000	40500	48000	13900	278
5.3	2410	1.5	267	12.0	**—**	**304R4**	**BN90LA4**	**M3SA4**	21000	24000	40500	48000	13800	280
5.3	2500	2.2	268	7.5	**306L3**	**—**	**BN90LA4**	**M3SA4**	25000	28500	57000	65800	20100	302
5.5	2400	1.5	258	7.5	**305L3**	**—**	**BN90LA4**	**M3SA4**	21000	24000	40500	48000	13600	290
5.5	2300	1.6	255	12.0	**—**	**305R4**	**BN90LA4**	**M3SA4**	21000	24000	40500	48000	13600	292
6.1	2090	1.7	231	12.0	**—**	**305R4**	**BN90LA4**	**M3SA4**	21000	24000	40500	48000	13100	292
6.2	2050	1.7	227	12.0	**—**	**304R4**	**BN90LA4**	**M3SA4**	21000	24000	40500	48000	13000	280
6.4	2050	1.1	220	7.5	**303L3**	**—**	**BN90LA4**	**M3SA4**	21000	24000	40500	48000	12900	266
6.4	2050	1.8	220	7.5	**304L3**	**—**	**BN90LA4**	**M3SA4**	21000	24000	40500	48000	12900	278
6.4	2050	2.3	220	7.5	**305L3**	**—**	**BN90LA4**	**M3SA4**	21000	24000	40500	48000	12900	290
6.6	1940	0.9	215	10.0	**—**	**301R4**	**BN90LA4**	**M3SA4**	6500	6500	21500	23500	4270	258
6.6	1930	1.4	214	12.0	**—**	**303R4**	**BN90LA4**	**M3SA4**	21000	24000	40500	48000	12800	268
6.6	1930	1.9	214	12.0	**—**	**304R4**	**BN90LA4**	**M3SA4**	21000	24000	40500	48000	12800	280
6.6	1930	2.8	214	12.0	**—**	**305R4**	**BN90LA4**	**M3SA4**	21000	24000	40500	48000	12800	292
7.0	1880	1.3	202	7.5	**304L3**	**—**	**BN90LA4**	**M3SA4**	21000	24000	40500	48000	12600	278
7.4	1770	1.0	190	7.5	**303L3**	**—**	**BN90LA4**	**M3SA4**	21000	24000	40500	48000	12300	266
7.4	1770	2.0	190	7.5	**305L3**	**—**	**BN90LA4**	**M3SA4**	21000	24000	40500	48000	12300	290
7.6	1670	1.4	185	12.0	**—**	**303R4**	**BN90LA4**	**M3SA4**	21000	24000	40500	48000	12200	268
7.6	1670	2.1	185	12.0	**—**	**304R4**	**BN90LA4**	**M3SA4**	21000	24000	40500	48000	12200	280
7.6	1670	2.7	185	12.0	**—**	**305R4**	**BN90LA4**	**M3SA4**	21000	24000	40500	48000	12200	292
7.9	1650	1.3	178	7.5	**303L3**	**—**	**BN90LA4**	**M3SA4**	21000	24000	40500	48000	12000	266
7.9	1650	1.7	178	7.5	**304L3**	**—**	**BN90LA4**	**M3SA4**	21000	24000	40500	48000	12000	278
7.9	1650	2.7	178	7.5	**305L3**	**—**	**BN90LA4**	**M3SA4**	21000	24000	40500	48000	12000	290
8.0	1650	1.1	177	7.5	**301L3**	**—**	**BN90LA4**	**M3SA4**	6500	6500	21500	23500	4010	256
8.0	1580	1.1	175	10.0	**—**	**301R4**	**BN90LA4**	**M3SA4**	6500	6500	21500	23500	3990	258
8.6	1520	1.4	164	7.5	**303L3**	**—**	**BN90LA4**	**M3SA4**	21000	24000	40500	48000	11700	266
8.6	1530	1.6	165	7.5	**304L3**	**—**	**BN90LA4**	**M3SA4**	21000	24000	40500	48000	11700	278
8.6	1520	2.9	164	7.5	**305L3**	**—**	**BN90LA4**	**M3SA4**	21000	24000	40500	48000	11700	290
8.9	1430	1.2	159	10.0	**—**	**301R4**	**BN90LA4**	**M3SA4**	6500	6500	21500	23500	3860	258
8.9	1430	1.9	158	12.0	**—**	**303R4**	**BN90LA4**	**M3SA4**	21000	24000	40500	48000	11600	268
8.9	1430	2.5	158	12.0	**—**	**304R4**	**BN90LA4**	**M3SA4**	21000	24000	40500	48000	11600	280
9.2	1420	1.3	152	7.5	**303L3**	**—**	**BN90LA4**	**M3SA4**	21000	24000	40500	48000	11400	266
9.2	1420	2.5	152	7.5	**305L3**	**—**	**BN90LA4**	**M3SA4**	21000	24000	40500	48000	11400	290
9.4	1390	2.5	150	7.5	**304L3**	**—**	**BN90LA4**	**M3SA4**	21000	24000	40500	48000	11400	278
9.5	1340	1.7	148	12.0	**—**	**303R4**	**BN90LA4**	**M3SA4**	21000	24000	40500	48000	11300	268
9.5	1340	2.6	148	12.0	**—**	**304R4**	**BN90LA4**	**M3SA4**	21000	24000	40500	48000	11300	280
9.8	1290	1.0	143	10.0	**—**	**301R4**	**BN90LA4**	**M3SA4**	6500	6500	21500	23500	3730	258
9.9	1320	1.3	142	7.5	**301L3**	**—**	**BN90LA4**	**M3SA4**	6500	6500	21500	23500	3720	256
10.0	1320	2.0	141	7.5	**303L3**	**—**	**BN90LA4**	**M3SA4**	21000	24000	40500	48000	11200	266
10.0	1320	2.7	141	7.5	**304L3**	**—**	**BN90LA4**	**M3SA4**	21000	24000	40500	48000	11200	278
10.6	1240	0.9	133	12.0	**—**	**301R3**	**BN90LA4**	**M3SA4**	6370	6370	21100	23100	3640	258
10.8	1220	1.4	131	7.5	**301L3**	**—**	**BN90LA4**	**M3SA4**	6340	6340	21000	23000	3620	256
10.8	1210	2.9	130	7.5	**304L3**	**—**	**BN90LA4**	**M3SA4**	20500	23400	39600	46900	10900	278
10.9	1170	1.5	130	10.0	**—**	**301R4**	**BN90LA4**	**M3SA4**	6320	6320	21000	22900	3610	258
10.9	1170	2.3	129	12.0	**—**	**303R4**	**BN90LA4**	**M3SA4**	20400	23300	39500	46800	10800	268
11.3	1160	1.6	124	7.5	**303L3**	**—**	**BN90LA4**	**M3SA4**	20100	23000	39000	46200	10700	266
11.6	1130	2.1	121	14.0	**—**	**304R3**	**BN90LA4**	**M3SA4**	20000	22800	38700	45900	10600	280
12.2	1080	1.2	116	7.5	**301L3**	**—**	**BN90LA4**	**M3SA4**	6090	6090	20300	22200	3480	256
12.3	1060	1.7	114	14.0	**—**	**303R3**	**BN90LA4**	**M3SA4**	19600	22400	38000	45100	10400	268
12.5	1050	1.7	113	7.5	**303L3**	**—**	**BN90LA4**	**M3SA4**	19500	22300	37900	44900	10300	266
13.2	990	1.3	106	12.0	**—**	**301R3**	**BN90LA4**	**M3SA4**	5920	5920	19800	21600	3380	258
13.3	960	1.8	106	10.0	**—**	**301R4**	**BN90LA4**	**M3SA4**	5910	5910	19700	21600	3370	258
13.4	980	1.7	105	7.5	**301L3**	**—**	**BN90LA4**	**M3SA4**	5890	5890	19700	21500	3360	256
13.5	970	2.7	105	7.5	**303L3**	**—**	**BN90LA4**	**M3SA4**	19000	21700	37000	43900	10100	266
14.5	900	2.6	97.0	14.0	**—**	**304R3**	**BN90LA4**	**M3SA4**	18500	21200	36200	42900	9830	280
15.4	850	2.1	91.5	14.0	**—**	**303R3**	**BN90LA4**	**M3SA4**	18200	20800	35600	42200	9640	268
15.6	840	2.7	90.2	7.5	**303L3**	**—**	**BN90LA4**	**M3SA4**	18100	20700	35400	42000	9600	266
16.5	800	1.1	85.6	7.5	**300L3**	**—**	**BN90LA4**	**M3SA4**	5500	5500	18500	21500	3140	246
16.5	800	2.1	85.6	7.5	**301L3**	**—**	**BN90LA4**	**M3SA4**	5500	5500	18500	20200	3140	256
16.6	790	1.6	85.2	12.0	**—**	**301R3**	**BN90LA4**	**M3SA4**	5490	5490	18500	20200	3140	258
17.9	730	1.2	78.7	12.0	**—**	**300R3**	**BN90LA4**	**M3SA4**	5350	5350	18000	21000	3060	248
17.9	730	2.1	78.7	12.0	**—**	**301R3**	**BN90LA4**	**M3SA4**	5350	5350	18000	19700	3060	258
17.9	730	3.0	78.7	14.0	**—**	**303R3**	**BN90LA4**	**M3SA4**	17300	19800	34000	40300	9170	268
18.2	720	1.2	77.5	7.5	**300L3**	**—**	**BN90LA4**	**M3SA4**	5320	5320	18000	20900	3040	246
18.2	720	2.3	77.5	7.5	**301L3**	**—**	**BN90LA4**	**M3SA4**	5320	5320	18000	19600	3040	256

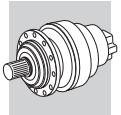

A

P_1 = 1.5 kW

n_2 min^{-1}	M_{n2} Nm	f_S	i	P_t kW					Rn_2 [N] MC	MZ	HC/PC	HZ/PZ	FZ	
19.2	680	2.7	73.3	14.0	**—**	**303R3**	**BN90LA4**	**M3SA4**	16900	19300	33300	39500	8960	268
20.2	650	1.0	69.9	7.5	**300L3**	**—**	**BN90LA4**	**M3SA4**	5140	5140	17400	20300	2940	246
20.2	650	2.0	69.9	7.5	**301L3**	**—**	**BN90LA4**	**M3SA4**	5140	5140	17400	19000	2940	256
20.7	640	1.0	68.2	12.0	**—**	**300R3**	**BN90LA4**	**M3SA4**	5100	5100	17300	20100	2920	248
20.7	640	2.0	68.2	12.0	**—**	**301R3**	**BN90LA4**	**M3SA4**	5100	5100	17300	18900	2920	258
21.8	620	1.8	64.8	7.5	**301L2**	**—**	**BN90LA4**	**M3SA4**	5020	5020	17000	18600	2870	256
22.3	590	1.4	63.2	7.5	**300L3**	**—**	**BN90LA4**	**M3SA4**	4980	4980	16900	19700	2840	246
22.3	590	2.8	63.2	7.5	**301L3**	**—**	**BN90LA4**	**M3SA4**	4980	4980	16900	18500	2840	256
22.4	590	1.5	62.9	12.0	**—**	**300R3**	**BN90LA4**	**M3SA4**	4970	4970	16900	19600	2840	248
22.4	590	2.8	62.9	12.0	**—**	**301R3**	**BN90LA4**	**M3SA4**	4970	4970	16900	18400	2840	258
27.2	500	1.3	51.9	7.5	**300L2**	**—**	**BN90LA4**	**M3SA4**	4660	4660	15900	18500	2660	246
27.2	500	2.6	51.9	7.5	**301L2**	**—**	**BN90LA4**	**M3SA4**	4660	4660	15900	17400	2660	256
27.3	480	1.8	51.6	7.5	**300L3**	**—**	**BN90LA4**	**M3SA4**	4650	4650	15900	18500	2660	246
28.0	470	1.8	50.4	12.0	**—**	**300R3**	**BN90LA4**	**M3SA4**	4610	4610	15800	18400	2640	248
34	400	1.6	41.5	7.5	**300L2**	**—**	**BN90LA4**	**M3SA4**	4330	4330	14900	17300	2470	246
34	380	1.7	41.2	12.0	**—**	**300R3**	**BN90LA4**	**M3SA4**	4310	4310	14900	17300	2460	248
37	370	2.3	38.4	7.5	**300L2**	**—**	**BN90LA4**	**M3SA4**	4210	4210	14600	16900	2410	246
38	350	2.4	37.3	12.0	**—**	**300R3**	**BN90LA4**	**M3SA4**	4170	4170	14400	16800	2380	248
42	320	2.0	33.3	7.5	**300L2**	**—**	**BN90LA4**	**M3SA4**	4020	4020	13900	16200	2290	246
46	290	2.9	30.7	7.5	**300L2**	**—**	**BN90LA4**	**M3SA4**	3910	3910	13600	15800	2230	246
46	280	3.0	30.4	12.0	**—**	**300R3**	**BN90LA4**	**M3SA4**	3900	3900	13600	15800	2230	248
76	180	2.1	18.5	12.0	**—**	**300R2**	**BN90LA4**	**M3SA4**	3300	3300	11700	13600	1890	248

P_1 = 1.85 kW

n_2 min^{-1}	M_{n2} Nm	f_S	i	P_t kW					Rn_2 [N] MC	MZ	HC/PC	HZ/PZ	FZ	
0.64	24600	1.6	2187	11.0	**313ML4**		**BN90LB4**		0	0	190700	223400	80000	362
0.66	23600	1.5	2096	11.0	**311ML4**		**BN90LB4**		0	0	130800	133500	65000	350
0.69	22700	1.1	2022	11.0	**310ML4**		**BN90LB4**		0	0	103600	131300	65000	338
0.77	20200	1.2	1794	11.0	**310ML4**		**BN90LB4**		0	0	101800	129100	65000	338
0.77	20400	2.8	1817	11.0	**313ML4**		**BN90LB4**		0	0	185700	217600	80000	362
0.79	19900	2.1	1766	11.0	**311ML4**		**BN90LB4**		0	0	127600	130200	65000	350
0.83	18800	1.3	1672	11.0	**310ML4**		**BN90LB4**		0	0	100800	127800	65000	338
0.83	18900	1.9	1680	11.0	**311ML4**		**BN90LB4**		0	0	126700	129300	65000	350
0.87	18000	0.9	1605	7.5	**309L4**		**BN90LB4**		0	0	88600	114100	36000	326
0.97	16200	1.5	1438	11.0	**310ML4**		**BN90LB4**		0	0	98600	125100	65000	338
0.98	15900	2.6	1415	11.0	**311ML4**		**BN90LB4**		0	0	123700	126200	65000	350
0.99	15800	1.0	1408	7.5	**307L4**		**BN90LB4**		37800	47300	85100	112000	45000	314
1.00	15500	1.1	1380	7.5	**309L4**		**BN90LB4**		0	0	86800	111600	35900	326
1.1	14500	1.2	1286	7.5	**309L4**		**BN90LB4**		0	0	85900	110500	35100	326
1.1	14200	1.8	1259	11.0	**310ML4**		**BN90LB4**		0	0	96800	122700	62900	338
1.2	13000	1.1	1157	7.5	**307L4**		**BN90LB4**		36800	46000	82700	108900	42300	314
1.2	12900	1.3	1149	7.5	**309L4**		**BN90LB4**		0	0	84500	108800	33800	326
1.2	13100	2.2	1164	11.0	**310ML4**		**BN90LB4**		0	0	95700	121400	61300	338
1.4	11200	1.2	999	7.5	**307L4**		**BN90LB4**		36000	45000	81000	106600	40300	314
1.4	11200	1.6	999	7.5	**309L4**		**BN90LB4**		0	0	82800	106600	32200	326
1.4	11000	2.9	974	11.0	**310ML4**		**BN90LB4**		0	0	93300	118300	57700	338
1.4	11300	2.5	1002	11.0	**310ML4**		**BN90LB4**		0	0	93700	118800	58300	338
1.5	10200	1.5	906	7.5	**307L4**		**BN90LB4**		35500	44400	79900	105100	39000	314
1.5	10200	1.8	906	7.5	**309L4**		**BN90LB4**		0	0	81700	105100	31200	326
1.5	10100	2.2	898	15.0		**310MR4**	**BN90LB4**		0	0	92200	116900	56200	340
1.7	9000	1.5	801	7.5	**307L4**		**BN90LB4**		34900	43600	78500	103300	37400	314
1.7	9000	2.0	801	7.5	**309L4**		**BN90LB4**		0	0	80300	103300	30000	326
1.8	8510	2.9	757	15.0		**310MR4**	**BN90LB4**		0	0	90000	114100	53100	340
1.9	8120	1.9	722	7.5	**307L4**		**BN90LB4**		34400	43000	77400	101800	36200	314
1.9	8120	2.6	722	7.5	**309L4**		**BN90LB4**		0	0	79100	101800	28900	326
2.0	7870	1.2	700	6.0	**306L4**		**BN90LB4**		28500	32500	65000	75100	27800	302
2.0	7750	1.3	690	15.0		**307R4**	**BN90LB4**		34200	42700	76900	101100	35600	316
2.0	7750	1.9	690	15.0		**309R4**	**BN90LB4**		0	0	78600	101100	28500	328
2.1	7350	1.8	654	7.5	**307L4**		**BN90LB4**		33900	42400	76300	100300	35000	314
2.1	7350	2.5	654	7.5	**309L4**		**BN90LB4**		0	0	78000	100300	28000	326

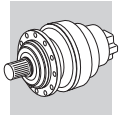

P_1 = 1.85 kW

n_2 min^{-1}	M_{n2} Nm	f_S	i	P_t kW					Rn_2 [N] MC	MZ	HC/PC	HZ/PZ	FZ	
2.2	7150	1.3	636	6.0	**306L4**		**BN90LB4**		28100	32100	64100	74100	27000	302
2.2	7180	2.9	639	15.0		**310MR4**	**BN90LB4**		0	0	87800	111400	50200	340
2.4	6630	1.4	589	6.0	**306L4**		**BN90LB4**		27800	31700	63500	73300	26300	302
2.4	6640	1.3	590	12.0		**306R4**	**BN90LB4**		27800	31700	63500	73300	26300	304
2.4	6510	2.3	579	7.5	**307L4**		**BN90LB4**		33300	41600	75000	98600	33600	314
2.4	6530	2.0	581	15.0		**307R4**	**BN90LB4**		33300	41700	75000	98700	33600	316
2.4	6530	2.4	581	15.0		**309R4**	**BN90LB4**		0	0	76700	98700	26900	328
2.4	6630	2.9	590	15.0		**310MR4**	**BN90LB4**		0	0	86800	110100	48800	340
2.5	6180	1.2	550	12.0		**306R4**	**BN90LB4**		27600	31400	62800	72500	25700	304
2.7	5730	1.7	509	6.0	**306L4**		**BN90LB4**		27300	31100	62100	71700	25000	302
2.7	5730	2.4	509	7.5	**307L4**		**BN90LB4**		32700	40900	73600	96800	32200	314
2.7	5730	2.5	509	7.5	**309L4**		**BN90LB4**		0	0	75200	96800	25800	326
2.8	5530	1.0	492	6.0	**305L4**		**BN90LB4**		22800	26000	43900	52100	17000	290
2.8	5490	1.7	488	12.0		**306R4**	**BN90LB4**		27100	30900	61800	71300	24700	304
2.8	5510	1.7	490	15.0		**307R4**	**BN90LB4**		32500	40700	73200	96300	31800	316
2.8	5510	2.6	490	15.0		**309R4**	**BN90LB4**		0	0	74800	96300	25400	328
3.0	5230	2.4	465	7.5	**307L4**		**BN90LB4**		32300	40400	72600	95600	31200	314
3.0	5140	2.7	457	15.0		**309R4**	**BN90LB4**		0	0	74100	95300	24800	328
3.1	5010	1.1	446	6.0	**305L4**		**BN90LB4**		22500	25700	43300	51300	16400	290
3.1	5080	0.9	452	12.0		**305R4**	**BN90LB4**		22500	25700	43400	51400	16500	292
3.1	4990	2.0	444	6.0	**306L4**		**BN90LB4**		26700	30500	60900	70400	23900	302
3.1	5110	1.4	455	12.0		**306R4**	**BN90LB4**		26800	30600	61100	70600	24100	304
3.1	5090	2.7	453	15.0		**307R4**	**BN90LB4**		32200	40200	72400	95200	31000	316
3.3	4720	1.9	420	12.0		**306R4**	**BN90LB4**		26500	30200	60500	69800	23500	304
3.4	4650	1.0	413	6.0	**305L4**		**BN90LB4**		22200	25400	42900	50800	16000	290
3.4	4690	1.2	405	7.5	**306L3**		**BN90LB4**		26400	30100	60100	69400	23200	302
3.4	4560	2.6	406	7.5	**307L4**		**BN90LB4**		31700	39600	71200	93700	29800	314
3.4	4650	2.6	413	15.0		**307R4**	**BN90LB4**		31700	39700	71400	94000	30000	316
3.6	4400	1.6	391	6.0	**306L4**		**BN90LB4**		26200	29900	59800	69100	22900	302
3.6	4370	1.7	389	12.0		**306R4**	**BN90LB4**		26200	29900	59800	69000	22900	304
3.8	4090	1.1	364	12.0		**305R4**	**BN90LB4**		21800	24900	42100	49900	15400	292
4.1	3770	1.2	336	12.0		**305R4**	**BN90LB4**		21600	24700	41600	49300	14900	292
4.1	3900	2.3	336	11.0	**307L3**		**BN90LB4**		30800	38500	69400	91300	28000	314
4.3	3730	1.0	321	7.5	**305L3**		**BN90LB4**		21400	24500	41300	49000	14700	290
4.3	3760	1.5	325	7.5	**306L3**		**BN90LB4**		25600	29100	58300	67300	21600	302
4.4	3510	1.0	313	12.0		**305R4**	**BN90LB4**		21400	24400	41200	48800	14600	292
4.5	3450	1.0	307	12.0		**304R4**	**BN90LB4**		21300	24300	41100	48700	14500	280
4.5	3500	2.2	312	12.0		**306R4**	**BN90LB4**		25400	29000	57900	66900	21300	304
4.8	3260	1.1	290	12.0		**304R4**	**BN90LB4**		21100	24100	40700	48300	14200	280
4.8	3260	1.6	290	12.0		**305R4**	**BN90LB4**		21100	24100	40700	48300	14200	292
4.8	3340	1.7	288	7.5	**306L3**		**BN90LB4**		25100	28600	57300	66100	20700	302
4.8	3250	2.6	289	12.0		**306R4**	**BN90LB4**		25100	28700	57300	66200	20700	304
5.0	3200	1.4	276	7.5	**305L3**		**BN90LB4**		21000	24000	40500	48000	14000	290
5.2	3010	1.2	267	12.0		**304R4**	**BN90LB4**		21000	24000	40500	48000	13900	280
5.2	3110	1.8	268	7.5	**306L3**		**BN90LB4**		25000	28500	57000	65800	20200	302
5.4	2990	1.2	258	7.5	**305L3**		**BN90LB4**		21000	24000	40500	48000	13700	290
5.4	2870	1.3	255	12.0		**305R4**	**BN90LB4**		21000	24000	40500	48000	13600	292
5.6	2790	2.9	249	12.0		**306R4**	**BN90LB4**		25000	28500	57000	65800	19700	304
5.8	2760	3.0	238	7.5	**306L3**		**BN90LB4**		25000	28500	57000	65800	19400	302
6.0	2600	1.4	231	12.0		**305R4**	**BN90LB4**		21000	24000	40500	48000	13200	292
6.0	2590	2.9	230	12.0		**306R4**	**BN90LB4**		25000	28500	57000	65800	19200	304
6.1	2550	1.4	227	12.0		**304R4**	**BN90LB4**		21000	24000	40500	48000	13100	280
6.3	2550	1.4	220	7.5	**304L3**		**BN90LB4**		21000	24000	40500	48000	13000	278
6.3	2550	1.9	220	7.5	**305L3**		**BN90LB4**		21000	24000	40500	48000	13000	290
6.3	2570	2.5	222	7.5	**306L3**		**BN90LB4**		25000	28500	57000	65800	19000	302
6.5	2410	1.1	214	12.0		**303R4**	**BN90LB4**		21000	24000	40500	48000	12900	268
6.5	2410	1.5	214	12.0		**304R4**	**BN90LB4**		21000	24000	40500	48000	12900	280
6.5	2410	2.2	214	12.0		**305R4**	**BN90LB4**		21000	24000	40500	48000	12900	292
6.9	2340	1.0	202	7.5	**304L3**		**BN90LB4**		21000	24000	40500	48000	12600	278
7.3	2210	1.6	190	7.5	**305L3**		**BN90LB4**		21000	24000	40500	48000	12400	290
7.3	2200	3.0	190	7.5	**306L3**		**BN90LB4**		25000	28500	57000	65800	18000	302
7.5	2080	1.1	185	12.0		**303R4**	**BN90LB4**		21000	24000	40500	48000	12300	268
7.5	2080	1.7	185	12.0		**304R4**	**BN90LB4**		21000	24000	40500	48000	12300	280
7.5	2080	2.2	185	12.0		**305R4**	**BN90LB4**		21000	24000	40500	48000	12300	292
7.8	2060	1.1	178	7.5	**303L3**		**BN90LB4**		21000	24000	40500	48000	12100	266

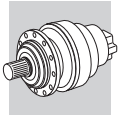

A

P_1 = 1.85 kW

n_2 min^{-1}	M_{n2} Nm	f_S	i	P_t kW					Rn_2 [N] MC	MZ	HC/PC	HZ/PZ	FZ	
7.8	2060	1.4	178	7.5	**304L3**		**BN90LB4**		21000	24000	40500	48000	12100	278
7.8	2060	2.2	178	7.5	**305L3**		**BN90LB4**		21000	24000	40500	48000	12100	290
7.9	1970	0.9	175	10.0		**301R4**	**BN90LB4**		6500	6500	21500	23500	4010	258
8.4	1910	1.3	165	7.5	**304L3**		**BN90LB4**		21000	24000	40500	48000	11800	278
8.5	1900	1.2	164	7.5	**303L3**		**BN90LB4**		21000	24000	40500	48000	11800	266
8.5	1900	2.3	164	7.5	**305L3**		**BN90LB4**		21000	24000	40500	48000	11800	290
8.8	1790	1.0	159	10.0		**301R4**	**BN90LB4**		6500	6500	21500	23500	3880	258
8.8	1780	1.5	158	12.0		**303R4**	**BN90LB4**		21000	24000	40500	48000	11600	268
8.8	1780	2.0	158	12.0		**304R4**	**BN90LB4**		21000	24000	40500	48000	11600	280
8.8	1780	3.0	158	12.0		**305R4**	**BN90LB4**		21000	24000	40500	48000	11600	292
9.1	1770	1.0	152	7.5	**303L3**		**BN90LB4**		21000	24000	40500	48000	11500	266
9.1	1770	2.0	152	7.5	**305L3**		**BN90LB4**		21000	24000	40500	48000	11500	290
9.3	1730	2.0	150	7.5	**304L3**		**BN90LB4**		21000	24000	40500	48000	11400	278
9.4	1670	1.4	148	12.0		**303R4**	**BN90LB4**		21000	24000	40500	48000	11400	268
9.4	1670	2.1	148	12.0		**304R4**	**BN90LB4**		21000	24000	40500	48000	11400	280
9.4	1670	2.7	148	12.0		**305R4**	**BN90LB4**		21000	24000	40500	48000	11400	292
9.8	1640	1.1	142	7.5	**301L3**		**BN90LB4**		6500	6500	21500	23500	3740	256
9.8	1640	1.6	141	7.5	**303L3**		**BN90LB4**		21000	24000	40500	48000	11200	266
9.8	1640	2.2	141	7.5	**304L3**		**BN90LB4**		21000	24000	40500	48000	11200	278
10.6	1520	1.1	131	7.5	**301L3**		**BN90LB4**		6370	6370	21100	23100	3640	256
10.7	1460	1.2	130	10.0		**301R4**	**BN90LB4**		6350	6350	21100	23000	3630	258
10.7	1510	2.3	130	7.5	**304L3**		**BN90LB4**		20600	23500	39700	47100	10900	278
10.8	1450	1.8	129	12.0		**303R4**	**BN90LB4**		20500	23400	39600	47000	10900	268
10.8	1450	2.4	129	12.0		**304R4**	**BN90LB4**		20500	23400	39600	47000	10900	280
11.2	1440	1.3	124	7.5	**303L3**		**BN90LB4**		20200	23100	39200	46400	10700	266
11.2	1440	2.5	124	7.5	**305L3**		**BN90LB4**		20200	23100	39200	46400	10700	290
11.5	1410	1.7	121	14.0		**304R3**	**BN90LB4**		20100	22900	38900	46100	10600	280
12.0	1340	1.0	116	7.5	**301L3**		**BN90LB4**		6120	6120	20400	22200	3490	256
12.2	1330	1.4	114	14.0		**303R3**	**BN90LB4**		19700	22500	38200	45300	10400	268
12.2	1330	2.7	114	14.0		**305R3**	**BN90LB4**		19700	22500	38200	45300	10400	292
12.3	1310	1.4	113	7.5	**303L3**		**BN90LB4**		19600	22400	38000	45100	10400	266
12.3	1310	2.8	113	7.5	**305L3**		**BN90LB4**		19600	22400	38000	45100	10400	290
12.6	1280	2.6	111	7.5	**304L3**		**BN90LB4**		19500	22200	37800	44800	10300	278
12.7	1230	2.8	109	12.0		**304R4**	**BN90LB4**		19400	22200	37700	44700	10300	280
13.1	1230	1.1	106	12.0		**301R3**	**BN90LB4**		5950	5950	19800	21700	3400	258
13.1	1190	1.4	106	10.0		**301R4**	**BN90LB4**		5940	5940	19800	21700	3390	258
13.3	1220	1.4	105	7.5	**301L3**		**BN90LB4**		5920	5920	19800	21600	3380	256
13.3	1210	2.1	105	7.5	**303L3**		**BN90LB4**		19100	21800	37200	44100	10100	266
13.3	1210	2.9	105	7.5	**304L3**		**BN90LB4**		19100	21800	37200	44100	10100	278
14.3	1120	2.1	97.0	14.0		**304R3**	**BN90LB4**		18600	21300	36400	43100	9880	280
15.2	1060	1.7	91.5	14.0		**303R3**	**BN90LB4**		18300	20900	35700	42300	9690	268
15.4	1050	2.2	90.2	7.5	**303L3**		**BN90LB4**		18200	20800	35600	42200	9640	266
16.2	990	1.7	85.6	7.5	**301L3**		**BN90LB4**		5530	5530	18600	20300	3160	256
16.3	990	1.3	85.2	12.0		**301R3**	**BN90LB4**		5520	5520	18600	20300	3150	258
17.7	910	0.9	78.7	12.0		**300R3**	**BN90LB4**		5380	5380	18100	21100	3070	248
17.7	910	1.7	78.7	12.0		**301R3**	**BN90LB4**		5380	5380	18100	19800	3070	258
17.7	910	2.4	78.7	14.0		**303R3**	**BN90LB4**		17400	19900	34100	40500	9220	268
17.9	900	0.9	77.5	7.5	**300L3**		**BN90LB4**		5350	5350	18000	21000	3060	246
17.9	900	1.9	77.5	7.5	**301L3**		**BN90LB4**		5350	5350	18000	19700	3060	256
18.0	900	2.8	77.2	7.5	**303L3**		**BN90LB4**		17300	19700	34000	40200	9160	266
19.0	850	2.1	73.3	14.0		**303R3**	**BN90LB4**		17000	19400	33400	39600	9000	268
19.2	840	2.7	72.3	7.5	**303L3**		**BN90LB4**		16900	19300	33300	39400	8960	266
19.9	810	1.6	69.9	7.5	**301L3**		**BN90LB4**		5170	5170	17500	19100	2950	256
20.4	790	1.6	68.2	12.0		**301R3**	**BN90LB4**		5130	5130	17400	19000	2930	258
21.5	770	1.5	64.8	7.5	**301L2**		**BN90LB4**		5040	5040	17100	18700	2880	256
22.0	730	1.2	63.2	7.5	**300L3**		**BN90LB4**		5000	5000	17000	19700	2860	246
22.0	730	2.3	63.2	7.5	**301L3**		**BN90LB4**		5000	5000	17000	18600	2860	256
22.0	730	3.0	63.1	14.0		**303R3**	**BN90LB4**		16100	18400	32000	37900	8560	268
22.1	730	1.2	62.9	12.0		**300R3**	**BN90LB4**		4990	4990	17000	19700	2850	248
22.1	730	2.3	62.9	12.0		**301R3**	**BN90LB4**		4990	4990	17000	18500	2850	258
24.9	670	2.7	55.8	9.0	**303L2**		**BN90LB4**		15500	17700	30800	36500	8220	266
25.7	630	2.9	54.2	14.0		**303R3**	**BN90LB4**		15300	17500	30500	36200	8140	268
26.8	620	1.0	51.9	7.5	**300L2**		**BN90LB4**		4680	4680	16000	18600	2670	246
26.8	620	2.1	51.9	7.5	**301L2**		**BN90LB4**		4680	4680	16000	17500	2670	256
26.9	600	1.4	51.6	7.5	**300L3**		**BN90LB4**		4670	4670	16000	18600	2670	246

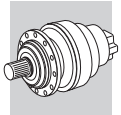

P_1 = 1.85 kW

n_2 min^{-1}	M_{n2} Nm	f_S	i	P_t kW					Rn_2 [N] MC	MZ	HC/PC	HZ/PZ	FZ	
26.9	600	2.7	51.6	7.5	**301L3**		**BN90LB4**		4670	4670	16000	17500	2670	256
27.6	580	1.4	50.4	12.0		**300R3**	**BN90LB4**		4640	4640	15900	18400	2650	248
27.6	580	2.8	50.4	12.0		**301R3**	**BN90LB4**		4640	4640	15900	17300	2650	258
33	500	1.3	41.5	7.5	**300L2**		**BN90LB4**		4350	4350	15000	17400	2480	246
33	500	2.6	41.5	7.5	**301L2**		**BN90LB4**		4350	4350	15000	16400	2480	256
34	480	1.4	41.2	12.0		**300R3**	**BN90LB4**		4330	4330	14900	17400	2470	248
34	480	2.7	41.2	12.0		**301R3**	**BN90LB4**		4330	4330	14900	16300	2470	258
36	460	1.8	38.4	7.5	**300L2**		**BN90LB4**		4230	4230	14600	17000	2420	246
37	430	2.0	37.3	12.0		**300R3**	**BN90LB4**		4190	4190	14500	16800	2390	248
42	400	1.6	33.3	7.5	**300L2**		**BN90LB4**		4040	4040	14000	16300	2310	246
45	370	2.3	30.7	7.5	**300L2**		**BN90LB4**		3930	3930	13700	15900	2240	246
46	350	2.4	30.4	12.0		**300R3**	**BN90LB4**		3920	3920	13600	15800	2240	248
56	290	2.5	24.8	12.0		**300R3**	**BN90LB4**		3660	3660	12800	14900	2090	248
56	300	2.9	24.8	18.0		**303R2**	**BN90LB4**		11800	13500	24100	28600	6270	268
57	290	2.8	24.6	7.5	**300L2**		**BN90LB4**		3650	3650	12800	14900	2080	246
69	240	2.7	20.1	7.5	**300L2**		**BN90LB4**		3410	3410	12000	14000	1950	246
75	220	1.7	18.5	12.0		**300R2**	**BN90LB4**		3320	3320	11700	13600	1890	248
94	180	2.9	14.8	12.0		**300R2**	**BN90LB4**		3080	3080	11000	12800	1760	248
154	110	2.9	9.00	7.5	**300L1**		**BN90LB4**		2610	2610	9460	11000	1490	246

P_1 = 2.2 kW

n_2 min^{-1}	M_{n2} Nm	f_S	i	P_t kW					Rn_2 [N] MC	MZ	HC/PC	HZ/PZ	FZ	
0.64	28800	1.4	2187	11.0	**313ML4**	**—**	**BN100LA4**	**—**	—	—	190300	223000	80000	362
0.67	27700	1.3	2096	11.0	**311ML4**	**—**	**BN100LA4**	**—**	—	—	130500	133200	65000	350
0.78	24000	2.4	1817	11.0	**313ML4**	**—**	**BN100LA4**	**—**	—	—	185300	217100	80000	362
0.79	23700	1.0	1794	11.0	**310ML4**	**—**	**BN100LA4**	**—**	—	—	101600	128800	65000	338
0.80	23300	1.8	1766	11.0	**311ML4**	**—**	**BN100LA4**	**—**	—	—	127400	130000	65000	350
0.84	22000	1.1	1672	11.0	**310ML4**	**—**	**BN100LA4**	**—**	—	—	100600	127500	65000	338
0.84	22200	1.6	1680	11.0	**311ML4**	**—**	**BN100LA4**	**—**	—	—	126500	129000	65000	350
0.94	19800	2.9	1502	11.0	**313ML4**	**—**	**BN100LA4**	**—**	—	—	180300	211300	80000	362
0.98	19000	1.3	1438	11.0	**310ML4**	**—**	**BN100LA4**	**—**	—	—	98400	124800	65000	338
1.0	18200	0.9	1380	7.5	**309L4**	**—**	**BN100LA4**	**—**	—	—	86600	111400	35700	326
1.0	18700	2.2	1415	11.0	**311ML4**	**—**	**BN100LA4**	**—**	—	—	123400	125900	65000	350
1.0	18400	2.8	1394	11.0	**313ML4**	**—**	**BN100LA4**	**—**	—	—	178400	209100	79700	362
1.1	17000	1.0	1286	7.5	**309L4**	**—**	**BN100LA4**	**—**	—	—	85700	110300	34900	326
1.1	16600	1.5	1259	11.0	**310ML4**	**—**	**BN100LA4**	**—**	—	—	96600	122500	62600	338
1.1	16200	2.9	1230	11.0	**311ML4**	**—**	**BN100LA4**	**—**	—	—	121000	123400	62100	350
1.2	15300	0.9	1157	7.5	**307L4**	**—**	**BN100LA4**	**M3LA4**	36700	45900	82600	108600	42100	314
1.2	15200	1.1	1149	7.5	**309L4**	**—**	**BN100LA4**	**—**	—	—	84300	108500	33600	326
1.2	15400	1.9	1164	11.0	**310ML4**	**—**	**BN100LA4**	**—**	—	—	95500	121100	61000	338
1.4	13200	1.1	999	7.5	**307L4**	**—**	**BN100LA4**	**M3LA4**	35900	44900	80900	106400	40100	314
1.4	13200	1.4	999	7.5	**309L4**	**—**	**BN100LA4**	**—**	—	—	82700	106400	32100	326
1.4	12800	2.5	974	11.0	**310ML4**	**—**	**BN100LA4**	**—**	—	—	93100	118100	57500	338
1.4	13200	2.1	1002	11.0	**310ML4**	**—**	**BN100LA4**	**—**	—	—	93500	118500	58000	338
1.6	12000	1.3	906	7.5	**307L4**	**—**	**BN100LA4**	**M3LA4**	35400	44300	79800	104900	38800	314
1.6	12000	1.5	906	7.5	**309L4**	**—**	**BN100LA4**	**—**	—	—	81500	104900	31100	326
1.6	11800	1.9	898	15.0	**—**	**310MR4**	**BN100LA4**	**—**	—	—	92000	116700	55900	340
1.8	10600	1.3	801	7.5	**307L4**	**—**	**BN100LA4**	**M3LA4**	34800	43500	78400	103100	37300	314
1.8	10600	1.7	801	7.5	**309L4**	**—**	**BN100LA4**	**—**	—	—	80100	103100	29800	326
1.8	10500	2.6	798	11.0	**310ML4**	**—**	**BN100LA4**	**—**	—	—	90500	114700	53800	338
1.9	9570	2.8	726	11.0	**310ML4**	**—**	**BN100LA4**	**—**	—	—	89300	113200	52100	338
1.9	9980	2.5	757	15.0	**—**	**310MR4**	**BN100LA4**	**—**	—	—	89800	113900	52800	340
2.0	9230	1.0	700	6.0	**306L4**	**—**	**BN100LA4**	**M3LA4**	28500	32500	64900	74900	27700	302
2.0	9530	1.6	722	7.5	**307L4**	**—**	**BN100LA4**	**M3LA4**	34300	42900	77200	101600	36000	314
2.0	9100	1.1	690	15.0	**—**	**307R4**	**BN100LA4**	**M3LA4**	34100	42600	76700	100900	35500	316
2.0	9530	2.2	722	7.5	**309L4**	**—**	**BN100LA4**	**—**	—	—	78900	101600	28800	326
2.0	9100	1.6	690	15.0	**—**	**309R4**	**BN100LA4**	**—**	—	—	78400	100900	28400	328
2.2	8380	1.1	636	6.0	**306L4**	**—**	**BN100LA4**	**M3LA4**	28100	32000	64000	73900	26800	302
2.2	8620	1.5	654	7.5	**307L4**	**—**	**BN100LA4**	**M3LA4**	33800	42300	76100	100100	34800	314
2.2	8620	2.1	654	7.5	**309L4**	**—**	**BN100LA4**	**—**	—	—	77800	100100	27900	326

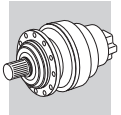

A

P_1 = 2.2 kW

n_2 min^{-1}	M_{n2} Nm	f_S	i	P_t kW					Rn_2 [N] MC	MZ	HC/PC	HZ/PZ	FZ	
2.2	8420	2.5	639	15.0	**—**	**310MR4**	**BN100LA4**	**—**	—	—	87700	111200	49900	340
2.4	7770	1.2	589	6.0	**306L4**	**—**	**BN100LA4**	**M3LA4**	27800	31700	63300	73100	26200	302
2.4	7790	1.1	590	12.0	**—**	**306R4**	**BN100LA4**	**M3LA4**	27800	31700	63300	73100	26200	304
2.4	7630	2.0	579	7.5	**307L4**	**—**	**BN100LA4**	**M3LA4**	33200	41600	74800	98400	33400	314
2.4	7670	1.7	581	15.0	**—**	**307R4**	**BN100LA4**	**M3LA4**	33300	41600	74800	98500	33500	316
2.4	7630	2.8	579	7.5	**309L4**	**—**	**BN100LA4**	**—**	—	—	76500	98400	26800	326
2.4	7670	2.1	581	15.0	**—**	**309R4**	**BN100LA4**	**—**	—	—	76500	98500	26800	328
2.4	7780	2.5	590	15.0	**—**	**310MR4**	**BN100LA4**	**—**	—	—	86700	109900	48600	340
2.6	7250	1.0	550	12.0	**—**	**306R4**	**BN100LA4**	**M3LA4**	27500	31400	62700	72400	25600	304
2.8	6720	1.4	509	6.0	**306L4**	**—**	**BN100LA4**	**M3LA4**	27200	31000	62000	71600	24900	302
2.8	6720	2.1	509	7.5	**307L4**	**—**	**BN100LA4**	**M3LA4**	32600	40800	73400	96600	32000	314
2.8	6720	2.1	509	7.5	**309L4**	**—**	**BN100LA4**	**—**	—	—	75100	96600	25600	326
2.9	6440	1.4	488	12.0	**—**	**306R4**	**BN100LA4**	**M3LA4**	27000	30800	61600	71200	24600	304
2.9	6470	1.5	490	15.0	**—**	**307R4**	**BN100LA4**	**M3LA4**	32500	40600	73100	96100	31600	316
2.9	6470	2.2	490	15.0	**—**	**309R4**	**BN100LA4**	**—**	—	—	74700	96100	25300	328
3.0	6130	2.0	465	7.5	**307L4**	**—**	**BN100LA4**	**M3LA4**	32200	40300	72500	95400	31100	314
3.1	6000	1.2	455	12.0	**—**	**306R4**	**BN100LA4**	**M3LA4**	26800	30500	61000	70400	24000	304
3.1	5970	2.3	453	15.0	**—**	**307R4**	**BN100LA4**	**M3LA4**	32100	40100	72200	95000	30800	316
3.1	6030	2.3	457	15.0	**—**	**309R4**	**BN100LA4**	**—**	—	—	73900	95100	24700	328
3.2	5880	0.9	446	6.0	**305L4**	**—**	**BN100LA4**	**M3LA4**	22400	25600	43200	51200	16300	290
3.2	5860	1.7	444	6.0	**306L4**	**—**	**BN100LA4**	**M3LA4**	26700	30400	60800	70200	23800	302
3.4	5540	1.6	420	12.0	**—**	**306R4**	**BN100LA4**	**M3LA4**	26500	30200	60300	69600	23400	304
3.4	5450	2.2	413	15.0	**—**	**307R4**	**BN100LA4**	**M3LA4**	31700	39600	71300	93800	29900	316
3.5	5510	1.0	405	7.5	**306L3**	**—**	**BN100LA4**	**M3LA4**	26300	30000	60000	69300	23100	302
3.5	5350	2.2	406	7.5	**307L4**	**—**	**BN100LA4**	**M3LA4**	31600	39500	71100	93500	29700	314
3.6	5160	1.3	391	6.0	**306L4**	**—**	**BN100LA4**	**M3LA4**	26200	29900	59700	68900	22800	302
3.6	5130	1.5	389	12.0	**—**	**306R4**	**BN100LA4**	**M3LA4**	26200	29800	59700	68900	22800	304
3.8	4940	2.9	374	15.0	**—**	**309R4**	**BN100LA4**	**—**	—	—	71900	92500	23100	328
3.9	4800	1.0	364	12.0	**—**	**305R4**	**BN100LA4**	**M3LA4**	21800	24900	42000	49800	15300	292
3.9	4790	2.6	363	15.0	**—**	**307R4**	**BN100LA4**	**M3LA4**	31100	38900	70000	92100	28600	316
4.2	4430	1.0	336	12.0	**—**	**305R4**	**BN100LA4**	**M3LA4**	21500	24600	41500	49200	14900	292
4.2	4580	1.9	336	11.0	**307L3**	**—**	**BN100LA4**	**M3LA4**	30800	38500	69200	91100	27900	314
4.2	4580	2.9	336	11.0	**309L3**	**—**	**BN100LA4**	**—**	—	—	70800	91100	22300	326
4.3	4410	1.3	325	7.5	**306L3**	**—**	**BN100LA4**	**M3LA4**	25500	29100	58200	67100	21400	302
4.3	4370	2.7	331	15.0	**—**	**307R4**	**BN100LA4**	**M3LA4**	30700	38400	69100	90900	27800	316
4.5	4110	1.8	312	12.0	**—**	**306R4**	**BN100LA4**	**M3LA4**	25400	28900	57800	66700	21200	304
4.9	3830	1.0	290	12.0	**—**	**304R4**	**BN100LA4**	**M3LA4**	21100	24100	40700	48200	14200	280
4.9	3830	1.4	290	12.0	**—**	**305R4**	**BN100LA4**	**M3LA4**	21100	24100	40700	48200	14200	292
4.9	3920	1.4	288	7.5	**306L3**	**—**	**BN100LA4**	**M3LA4**	25100	28600	57200	66000	20600	302
4.9	3810	2.2	289	12.0	**—**	**306R4**	**BN100LA4**	**M3LA4**	25100	28600	57200	66000	20600	304
5.0	3860	2.9	284	11.0	**307L3**	**—**	**BN100LA4**	**M3LA4**	30000	37500	67600	88900	26400	314
5.1	3760	1.2	276	7.5	**305L3**	**—**	**BN100LA4**	**M3LA4**	21000	24000	40500	48000	13900	290
5.3	3530	1.0	267	12.0	**—**	**304R4**	**BN100LA4**	**M3LA4**	21000	24000	40500	48000	13800	280
5.3	3650	1.5	268	7.5	**306L3**	**—**	**BN100LA4**	**M3LA4**	25000	28500	57000	65800	20100	302
5.5	3500	1.0	258	7.5	**305L3**	**—**	**BN100LA4**	**M3LA4**	21000	24000	40500	48000	13600	290
5.5	3370	1.1	255	12.0	**—**	**305R4**	**BN100LA4**	**M3LA4**	21000	24000	40500	48000	13600	292
5.7	3280	2.5	249	12.0	**—**	**306R4**	**BN100LA4**	**M3LA4**	25000	28500	57000	65800	19600	304
5.9	3240	2.5	238	7.5	**306L3**	**—**	**BN100LA4**	**M3LA4**	25000	28500	57000	65800	19300	302
5.9	3250	2.7	239	11.0	**307L3**	**—**	**BN100LA4**	**M3LA4**	30000	37500	67500	88800	24900	314
6.1	3050	1.2	231	12.0	**—**	**305R4**	**BN100LA4**	**M3LA4**	21000	24000	40500	48000	13100	292
6.1	3040	2.5	230	12.0	**—**	**306R4**	**BN100LA4**	**M3LA4**	25000	28500	57000	65800	19100	304
6.2	2990	1.2	227	12.0	**—**	**304R4**	**BN100LA4**	**M3LA4**	21000	24000	40500	48000	13000	280
6.4	3000	1.2	220	7.5	**304L3**	**—**	**BN100LA4**	**M3LA4**	21000	24000	40500	48000	12900	278
6.4	3000	1.6	220	7.5	**305L3**	**—**	**BN100LA4**	**M3LA4**	21000	24000	40500	48000	12900	290
6.4	3020	2.2	222	7.5	**306L3**	**—**	**BN100LA4**	**M3LA4**	25000	28500	57000	65800	18900	302
6.6	2830	1.0	214	12.0	**—**	**303R4**	**BN100LA4**	**M3LA4**	21000	24000	40500	48000	12800	268
6.6	2830	1.3	214	12.0	**—**	**304R4**	**BN100LA4**	**M3LA4**	21000	24000	40500	48000	12800	280
6.6	2830	1.9	214	12.0	**—**	**305R4**	**BN100LA4**	**M3LA4**	21000	24000	40500	48000	12800	292
6.9	2790	2.9	205	7.5	**306L3**	**—**	**BN100LA4**	**M3LA4**	25000	28500	57000	65800	18400	302
7.4	2590	1.4	190	7.5	**305L3**	**—**	**BN100LA4**	**M3LA4**	21000	24000	40500	48000	12300	290
7.4	2580	2.5	190	7.5	**306L3**	**—**	**BN100LA4**	**M3LA4**	25000	28500	57000	65800	17900	302
7.6	2440	0.9	185	12.0	**—**	**303R4**	**BN100LA4**	**M3LA4**	21000	24000	40500	48000	12200	268
7.6	2440	1.4	185	12.0	**—**	**304R4**	**BN100LA4**	**M3LA4**	21000	24000	40500	48000	12200	280
7.6	2440	1.8	185	12.0	**—**	**305R4**	**BN100LA4**	**M3LA4**	21000	24000	40500	48000	12200	292
7.9	2410	0.9	178	7.5	**303L3**	**—**	**BN100LA4**	**M3LA4**	21000	24000	40500	48000	12000	266

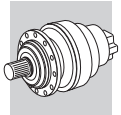

P_1 = 2.2 kW

n_2 min^{-1}	M_{n2} Nm	f_S	i	P_t kW					Rn_2 [N] MC	MZ	HC/PC	HZ/PZ	FZ	
7.9	2410	1.2	178	7.5	**304L3**	**—**	**BN100LA4**	**M3LA4**	21000	24000	40500	48000	12000	278
7.9	2410	1.8	178	7.5	**305L3**	**—**	**BN100LA4**	**M3LA4**	21000	24000	40500	48000	12000	290
8.6	2230	1.0	164	7.5	**303L3**	**—**	**BN100LA4**	**M3LA4**	21000	24000	40500	48000	11700	266
8.6	2240	1.1	165	7.5	**304L3**	**—**	**BN100LA4**	**M3LA4**	21000	24000	40500	48000	11700	278
8.6	2230	2.0	164	7.5	**305L3**	**—**	**BN100LA4**	**M3LA4**	21000	24000	40500	48000	11700	290
8.9	2090	1.3	158	12.0	**—**	**303R4**	**BN100LA4**	**M3LA4**	21000	24000	40500	48000	11600	268
8.9	2090	1.7	158	12.0	**—**	**304R4**	**BN100LA4**	**M3LA4**	21000	24000	40500	48000	11600	280
8.9	2090	2.6	158	12.0	**—**	**305R4**	**BN100LA4**	**M3LA4**	21000	24000	40500	48000	11600	292
9.2	2070	1.7	152	7.5	**305L3**	**—**	**BN100LA4**	**M3LA4**	21000	24000	40500	48000	11400	290
9.4	2030	1.7	150	7.5	**304L3**	**—**	**BN100LA4**	**M3LA4**	21000	24000	40500	48000	11400	278
9.5	1950	1.2	148	12.0	**—**	**303R4**	**BN100LA4**	**M3LA4**	21000	24000	40500	48000	11300	268
9.5	1950	1.8	148	12.0	**—**	**304R4**	**BN100LA4**	**M3LA4**	21000	24000	40500	48000	11300	280
9.5	1950	2.3	148	12.0	**—**	**305R4**	**BN100LA4**	**M3LA4**	21000	24000	40500	48000	11300	292
9.8	1960	2.8	144	14.0	**—**	**306R3**	**BN100LA4**	**M3LA4**	25000	28500	57000	65800	16400	304
10.0	1920	1.4	141	7.5	**303L3**	**—**	**BN100LA4**	**M3LA4**	21000	24000	40500	48000	11200	266
10.0	1920	1.8	141	7.5	**304L3**	**—**	**BN100LA4**	**M3LA4**	21000	24000	40500	48000	11200	278
10.0	1920	2.7	141	7.5	**305L3**	**—**	**BN100LA4**	**M3LA4**	21000	24000	40500	48000	11200	290
10.8	1780	1.0	131	7.5	**301L3**	**—**	**BN100LA4**	**M3LA4**	6340	6340	21000	23000	3620	256
10.8	1770	2.0	130	7.5	**304L3**	**—**	**BN100LA4**	**M3LA4**	20500	23400	39600	46900	10900	278
10.9	1710	1.0	130	10.0	**—**	**301R4**	**BN100LA4**	**—**	6320	6320	21000	22900	3610	258
10.9	1710	1.5	129	12.0	**—**	**303R4**	**BN100LA4**	**M3LA4**	20400	23300	39500	46800	10800	268
10.9	1710	2.1	129	12.0	**—**	**304R4**	**BN100LA4**	**M3LA4**	20400	23300	39500	46800	10800	280
11.3	1690	1.1	124	7.5	**303L3**	**—**	**BN100LA4**	**M3LA4**	20100	23000	39000	46200	10700	266
11.3	1690	2.1	124	7.5	**305L3**	**—**	**BN100LA4**	**M3LA4**	20100	23000	39000	46200	10700	290
11.6	1650	1.4	121	14.0	**—**	**304R3**	**BN100LA4**	**M3LA4**	20000	22800	38700	45900	10600	280
12.3	1560	1.2	114	14.0	**—**	**303R3**	**BN100LA4**	**M3LA4**	19600	22400	38000	45100	10400	268
12.3	1560	2.3	114	14.0	**—**	**305R3**	**BN100LA4**	**M3LA4**	19600	22400	38000	45100	10400	292
12.5	1530	1.2	113	7.5	**303L3**	**—**	**BN100LA4**	**M3LA4**	19500	22300	37900	44900	10300	266
12.5	1530	2.3	113	7.5	**305L3**	**—**	**BN100LA4**	**M3LA4**	19500	22300	37900	44900	10300	290
12.8	1500	2.3	111	7.5	**304L3**	**—**	**BN100LA4**	**M3LA4**	19400	22100	37600	44600	10300	278
12.9	1440	2.3	109	12.0	**—**	**304R4**	**BN100LA4**	**M3LA4**	19300	22100	37500	44500	10200	280
13.3	1400	1.2	106	10.0	**—**	**301R4**	**BN100LA4**	**—**	5910	5910	19700	21600	3370	258
13.4	1430	1.2	105	7.5	**301L3**	**—**	**BN100LA4**	**M3LA4**	5890	5890	19700	21500	3360	256
13.5	1420	1.8	105	7.5	**303L3**	**—**	**BN100LA4**	**M3LA4**	19000	21700	37000	43900	10100	266
13.5	1420	2.5	105	7.5	**304L3**	**—**	**BN100LA4**	**M3LA4**	19000	21700	37000	43900	10100	278
14.5	1320	1.8	97.0	14.0	**—**	**304R3**	**BN100LA4**	**M3LA4**	18500	21200	36200	42900	9830	280
15.4	1240	1.5	91.5	14.0	**—**	**303R3**	**BN100LA4**	**M3LA4**	18200	20800	35600	42200	9640	268
15.4	1240	2.9	91.5	14.0	**—**	**305R3**	**BN100LA4**	**M3LA4**	18200	20800	35600	42200	9640	292
15.6	1230	1.8	90.2	7.5	**303L3**	**—**	**BN100LA4**	**M3LA4**	18100	20700	35400	42000	9600	266
15.6	1230	2.7	90.2	7.5	**304L3**	**—**	**BN100LA4**	**M3LA4**	18100	20700	35400	42000	9600	278
15.8	1180	2.8	89.4	12.0	**—**	**304R4**	**BN100LA4**	**M3LA4**	18000	20600	35300	41900	9570	280
16.5	1160	1.4	85.6	7.5	**301L3**	**—**	**BN100LA4**	**M3LA4**	5500	5500	18500	20200	3140	256
16.6	1160	1.1	85.2	12.0	**—**	**301R3**	**BN100LA4**	**M3LA4**	5490	5490	18500	20200	3140	258
17.9	1070	1.5	78.7	12.0	**—**	**301R3**	**BN100LA4**	**M3LA4**	5350	5350	18000	19700	3060	258
17.9	1070	2.0	78.7	14.0	**—**	**303R3**	**BN100LA4**	**M3LA4**	17300	19800	34000	40300	9170	268
17.9	1070	2.7	78.7	14.0	**—**	**304R3**	**BN100LA4**	**M3LA4**	17300	19800	34000	40300	9170	280
18.2	1050	1.6	77.5	7.5	**301L3**	**—**	**BN100LA4**	**M3LA4**	5320	5320	18000	19600	3040	256
18.3	1050	2.4	77.2	7.5	**303L3**	**—**	**BN100LA4**	**M3LA4**	17200	19600	33800	40100	9110	266
19.2	1000	1.8	73.3	14.0	**—**	**303R3**	**BN100LA4**	**M3LA4**	16900	19300	33300	39500	8960	268
19.5	980	2.3	72.3	7.5	**303L3**	**—**	**BN100LA4**	**M3LA4**	16800	19200	33100	39300	8920	266
20.2	950	1.4	69.9	7.5	**301L3**	**—**	**BN100LA4**	**M3LA4**	5140	5140	17400	19000	2940	256
20.7	930	1.4	68.2	12.0	**—**	**301R3**	**BN100LA4**	**M3LA4**	5100	5100	17300	18900	2920	258
21.8	910	1.3	64.8	7.5	**301L2**	**—**	**BN100LA4**	**M3LA4**	5020	5020	17000	18600	2870	256
22.3	860	1.0	63.2	7.5	**300L3**	**—**	**BN100LA4**	**M3LA4**	4980	4980	16900	19700	2840	246
22.3	860	1.9	63.2	7.5	**301L3**	**—**	**BN100LA4**	**M3LA4**	4980	4980	16900	18500	2840	256
22.4	860	1.0	62.9	12.0	**—**	**300R3**	**BN100LA4**	**M3LA4**	4970	4970	16900	19600	2840	248
22.4	860	1.9	62.9	12.0	**—**	**301R3**	**BN100LA4**	**M3LA4**	4970	4970	16900	18400	2840	258
22.4	860	2.9	63.1	7.5	**303L3**	**—**	**BN100LA4**	**M3LA4**	16100	18400	31800	37700	8520	266
22.4	860	2.5	63.1	14.0	**—**	**303R3**	**BN100LA4**	**M3LA4**	16100	18400	31800	37700	8520	268
23.8	830	2.9	59.1	9.0	**304L2**	**—**	**BN100LA4**	**M3LA4**	15700	18000	31200	37000	8340	278
25.3	780	2.3	55.8	9.0	**303L2**	**—**	**BN100LA4**	**M3LA4**	15400	17600	30700	36300	8180	266
26.0	740	2.5	54.2	14.0	**—**	**303R3**	**BN100LA4**	**M3LA4**	15300	17400	30400	36000	8100	268
27.2	730	1.8	51.9	7.5	**301L2**	**—**	**BN100LA4**	**M3LA4**	4660	4660	15900	17400	2660	256
27.3	700	1.2	51.6	7.5	**300L3**	**—**	**BN100LA4**	**M3LA4**	4650	4650	15900	18500	2660	246
27.3	700	2.3	51.6	7.5	**301L3**	**—**	**BN100LA4**	**M3LA4**	4650	4650	15900	17400	2660	256

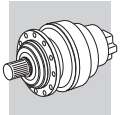

A

P_1 = 2.2 kW

n_2 min^{-1}	M_{n2} Nm	f_S	i	P_t kW					Rn_2 [N] MC	MZ	HC/PC	HZ/PZ	FZ	
28.0	690	1.2	50.4	12.0	**—**	**300R3**	**BN100LA4**	**M3LA4**	4610	4610	15800	18400	2640	248
28.0	690	2.4	50.4	12.0	**—**	**301R3**	**BN100LA4**	**M3LA4**	4610	4610	15800	17300	2640	258
32	630	2.9	44.6	9.0	**303L2**	**—**	**BN100LA4**	**M3LA4**	14300	16400	28700	34000	7590	266
34	580	1.1	41.5	7.5	**300L2**	**—**	**BN100LA4**	**M3LA4**	4330	4330	14900	17300	2470	246
34	560	1.2	41.2	12.0	**—**	**300R3**	**BN100LA4**	**M3LA4**	4310	4310	14900	17300	2460	248
34	580	2.2	41.5	7.5	**301L2**	**—**	**BN100LA4**	**M3LA4**	4330	4330	14900	16300	2470	256
34	560	2.3	41.2	12.0	**—**	**301R3**	**BN100LA4**	**M3LA4**	4310	4310	14900	16200	2460	258
37	540	1.6	38.4	7.5	**300L2**	**—**	**BN100LA4**	**M3LA4**	4210	4210	14600	16900	2410	246
37	540	2.9	38.4	7.5	**301L2**	**—**	**BN100LA4**	**M3LA4**	4210	4210	14600	15900	2410	256
38	510	1.7	37.3	12.0	**—**	**300R3**	**BN100LA4**	**M3LA4**	4170	4170	14400	16800	2380	248
42	470	1.4	33.3	7.5	**300L2**	**—**	**BN100LA4**	**M3LA4**	4020	4020	13900	16200	2290	246
42	470	2.8	33.3	7.5	**301L2**	**—**	**BN100LA4**	**M3LA4**	4020	4020	13900	15200	2290	256
46	430	2.0	30.7	7.5	**300L2**	**—**	**BN100LA4**	**M3LA4**	3910	3910	13600	15800	2230	246
46	410	2.0	30.4	12.0	**—**	**300R3**	**BN100LA4**	**M3LA4**	3900	3900	13600	15800	2230	248
57	340	2.4	24.6	7.5	**300L2**	**—**	**BN100LA4**	**M3LA4**	3630	3630	12700	14800	2070	246
57	340	2.2	24.8	12.0	**—**	**300R3**	**BN100LA4**	**M3LA4**	3640	3640	12800	14800	2080	248
57	350	2.5	24.8	18.0	**—**	**303R2**	**BN100LA4**	**M3LA4**	11800	13400	24000	28500	6240	268
70	280	2.3	20.1	7.5	**300L2**	**—**	**BN100LA4**	**M3LA4**	3390	3390	12000	13900	1940	246
76	260	1.4	18.5	12.0	**—**	**300R2**	**BN100LA4**	**M3LA4**	3300	3300	11700	13600	1890	248
76	260	2.9	18.5	12.0	**—**	**301R2**	**BN100LA4**	**M3LA4**	3300	3300	11700	12800	1890	258
78	250	3.0	18.2	7.5	**300L2**	**—**	**BN100LA4**	**M3LA4**	3280	3280	11600	13500	1880	246
96	210	2.5	14.8	12.0	**—**	**300R2**	**BN100LA4**	**M3LA4**	3060	3060	10900	12700	1750	248
157	130	2.5	9.00	7.5	**300L1**	**—**	**BN100LA4**	**M3LA4**	2600	2600	9420	11000	1480	246

P_1 = 3 kW

n_2 min^{-1}	M_{n2} Nm	f_S	i	P_t kW					Rn_2 [N] MC	MZ	HC/PC	HZ/PZ	FZ	
0.64	38700	1.0	2187	11.0	**313ML4**	**—**	**BN100LB4**	**—**	—	—	190300	223000	80000	362
0.67	37100	1.0	2096	11.0	**311ML4**	**—**	**BN100LB4**	**—**	—	—	130500	133200	65000	350
0.78	32200	1.8	1817	11.0	**313ML4**	**—**	**BN100LB4**	**—**	—	—	185300	217100	80000	362
0.80	31300	1.3	1766	11.0	**311ML4**	**—**	**BN100LB4**	**—**	—	—	127400	130000	65000	350
0.84	29700	1.2	1680	11.0	**311ML4**	**—**	**BN100LB4**	**—**	—	—	126500	129000	65000	350
0.94	26600	2.1	1502	11.0	**313ML4**	**—**	**BN100LB4**	**—**	—	—	180300	211300	80000	362
0.98	25500	0.9	1438	11.0	**310ML4**	**—**	**BN100LB4**	**—**	—	—	98400	124800	65000	338
1.0	25100	1.6	1415	11.0	**311ML4**	**—**	**BN100LB4**	**—**	—	—	123400	125900	65000	350
1.0	24700	2.1	1394	11.0	**313ML4**	**—**	**BN100LB4**	**—**	—	—	178400	209100	79700	362
1.1	22300	1.1	1259	11.0	**310ML4**	**—**	**BN100LB4**	**—**	—	—	96600	122500	62600	338
1.1	21800	2.1	1230	11.0	**311ML4**	**—**	**BN100LB4**	**—**	—	—	121000	123400	62100	350
1.1	22400	2.5	1266	11.0	**313ML4**	**—**	**BN100LB4**	**—**	—	—	176000	206200	77200	362
1.2	20600	1.4	1164	11.0	**310ML4**	**—**	**BN100LB4**	**—**	—	—	95500	121100	61000	338
1.3	18700	2.4	1058	11.0	**311ML4**	**—**	**BN100LB4**	**—**	—	—	118400	120800	59100	350
1.3	19800	2.5	1117	11.0	**313ML4**	**—**	**BN100LB4**	**—**	—	—	172900	202600	74000	362
1.4	17700	1.0	999	7.5	**309L4**	**—**	**BN100LB4**	**—**	—	—	82700	106400	32100	326
1.4	17200	1.9	974	11.0	**310ML4**	**—**	**BN100LB4**	**—**	—	—	93100	118100	57500	338
1.4	17700	1.6	1002	11.0	**310ML4**	**—**	**BN100LB4**	**—**	—	—	93500	118500	58000	338
1.4	17500	2.6	986	11.0	**311ML4**	**—**	**BN100LB4**	**—**	—	—	117200	119600	57700	350
1.6	16000	1.0	906	7.5	**307L4**	**—**	**BN100LB4**	**M3LB4**	35400	44300	79800	104900	38800	314
1.6	16000	1.1	906	7.5	**309L4**	**—**	**BN100LB4**	**—**	—	—	81500	104900	31100	326
1.6	15900	1.4	898	15.0	**—**	**310MR4**	**BN100LB4**	**—**	—	—	92000	116700	55900	340
1.8	14200	1.0	801	7.5	**307L4**	**—**	**BN100LB4**	**M3LB4**	34800	43500	78400	103100	37300	314
1.8	14200	1.3	801	7.5	**309L4**	**—**	**BN100LB4**	**—**	—	—	80100	103100	29800	326
1.8	14100	1.9	798	11.0	**310ML4**	**—**	**BN100LB4**	**—**	—	—	90500	114700	53800	338
1.8	13800	2.6	778	22.0	**—**	**313MR4**	**BN100LB4**	**—**	—	—	164200	192400	65600	364
1.9	12900	2.1	726	11.0	**310ML4**	**—**	**BN100LB4**	**—**	—	—	89300	113200	52100	338
1.9	13400	1.9	757	15.0	**—**	**310MR4**	**BN100LB4**	**—**	—	—	89800	113900	52800	340
1.9	13200	2.5	746	22.0	**—**	**311MR4**	**BN100LB4**	**—**	—	—	112600	114900	52600	352
2.0	12800	1.2	722	7.5	**307L4**	**—**	**BN100LB4**	**M3LB4**	34300	42900	77200	101600	36000	314
2.0	12800	1.7	722	7.5	**309L4**	**—**	**BN100LB4**	**—**	—	—	78900	101600	28800	326
2.0	12200	1.2	690	15.0	**—**	**309R4**	**BN100LB4**	**—**	—	—	78400	100900	28400	328
2.2	11600	1.1	654	7.5	**307L4**	**—**	**BN100LB4**	**M3LB4**	33800	42300	76100	100100	34800	314
2.2	11600	1.6	654	7.5	**309L4**	**—**	**BN100LB4**	**—**	—	—	77800	100100	27900	326

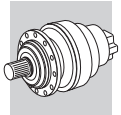

P_1 = 3 kW

n_2 min^{-1}	M_{n2} Nm	f_S	i	P_t kW					Rn_2 [N] MC	MZ	HC/PC	HZ/PZ	FZ	
2.2	11300	2.3	637	11.0	**310ML4**	**—**	**BN100LB4**	**—**	—	—	87600	111100	49900	338
2.2	11300	1.8	639	15.0	**—**	**310MR4**	**BN100LB4**	**—**	—	—	87700	111200	49900	340
2.4	10200	1.5	579	7.5	**307L4**	**—**	**BN100LB4**	**M3LB4**	33200	41600	74800	98400	33400	314
2.4	10300	1.2	581	15.0	**—**	**307R4**	**BN100LB4**	**M3LB4**	33300	41600	74800	98500	33500	316
2.4	10200	2.1	579	7.5	**309L4**	**—**	**BN100LB4**	**—**	—	—	76500	98400	26800	326
2.4	10300	1.5	581	15.0	**—**	**309R4**	**BN100LB4**	**—**	—	—	76500	98500	26800	328
2.4	10400	2.5	590	11.0	**310ML4**	**—**	**BN100LB4**	**—**	—	—	86700	109900	48600	338
2.4	10400	1.9	590	15.0	**—**	**310MR4**	**BN100LB4**	**—**	—	—	86700	109900	48600	340
2.7	9160	2.8	517	15.0	**—**	**310MR4**	**BN100LB4**	**—**	—	—	85100	107800	46500	340
2.8	9020	1.0	509	6.0	**306L4**	**—**	**BN100LB4**	**M3LB4**	27200	31000	62000	71600	24900	302
2.8	9020	1.6	509	7.5	**307L4**	**—**	**BN100LB4**	**M3LB4**	32600	40800	73400	96600	32000	314
2.8	9020	1.6	509	7.5	**309L4**	**—**	**BN100LB4**	**—**	—	—	75100	96600	25600	326
2.8	8980	2.8	507	11.0	**310ML4**	**—**	**BN100LB4**	**—**	—	—	84800	107600	46200	338
2.9	8640	1.1	488	12.0	**—**	**306R4**	**BN100LB4**	**M3LB4**	27000	30800	61600	71200	24600	304
2.9	8680	1.1	490	15.0	**—**	**307R4**	**BN100LB4**	**M3LB4**	32500	40600	73100	96100	31600	316
2.9	8680	1.6	490	15.0	**—**	**309R4**	**BN100LB4**	**—**	—	—	74700	96100	25300	328
3.0	8230	1.5	465	7.5	**307L4**	**—**	**BN100LB4**	**M3LB4**	32200	40300	72500	95400	31100	314
3.0	8230	2.2	465	7.5	**309L4**	**—**	**BN100LB4**	**—**	—	—	74100	95400	24900	326
3.1	8020	1.7	453	15.0	**—**	**307R4**	**BN100LB4**	**M3LB4**	32100	40100	72200	95000	30800	316
3.1	8090	1.7	457	15.0	**—**	**309R4**	**BN100LB4**	**—**	—	—	73900	95100	24700	328
3.1	8040	2.4	454	15.0	**—**	**310MR4**	**BN100LB4**	**—**	—	—	83500	105900	44600	340
3.2	7870	1.3	444	6.0	**306L4**	**—**	**BN100LB4**	**M3LB4**	26700	30400	60800	70200	23800	302
3.4	7430	1.2	420	12.0	**—**	**306R4**	**BN100LB4**	**M3LB4**	26500	30200	60300	69600	23400	304
3.4	7320	1.6	413	15.0	**—**	**307R4**	**BN100LB4**	**M3LB4**	31700	39600	71300	93800	29900	316
3.4	7320	2.5	413	15.0	**—**	**309R4**	**BN100LB4**	**—**	—	—	72900	93800	23900	328
3.5	7180	1.7	406	7.5	**307L4**	**—**	**BN100LB4**	**M3LB4**	31600	39500	71100	93500	29700	314
3.5	7180	2.5	406	7.5	**309L4**	**—**	**BN100LB4**	**—**	—	—	72700	93500	23800	326
3.6	6920	1.0	391	6.0	**306L4**	**—**	**BN100LB4**	**M3LB4**	26200	29900	59700	68900	22800	302
3.6	6890	1.1	389	12.0	**—**	**306R4**	**BN100LB4**	**M3LB4**	26200	29800	59700	68900	22800	304
3.6	6930	2.8	392	11.0	**310ML4**	**—**	**BN100LB4**	**—**	—	—	81700	103700	42400	338
3.8	6630	2.2	374	15.0	**—**	**309R4**	**BN100LB4**	**—**	—	—	71900	92500	23100	328
3.9	6420	1.9	363	15.0	**—**	**307R4**	**BN100LB4**	**M3LB4**	31100	38900	70000	92100	28600	316
4.0	6180	2.4	349	7.5	**307L4**	**—**	**BN100LB4**	**M3LB4**	30900	38700	69600	91500	28300	314
4.2	6140	1.5	336	11.0	**307L3**	**—**	**BN100LB4**	**M3LB4**	30800	38500	69200	91100	27900	314
4.2	6140	2.2	336	11.0	**309L3**	**—**	**BN100LB4**	**—**	—	—	70800	91100	22300	326
4.3	5920	0.9	325	7.5	**306L3**	**—**	**BN100LB4**	**M3LB4**	25500	29100	58200	67100	21400	302
4.3	5860	2.0	331	15.0	**—**	**307R4**	**BN100LB4**	**M3LB4**	30700	38400	69100	90900	27800	316
4.3	5860	3.0	331	15.0	**—**	**309R4**	**BN100LB4**	**—**	—	—	70600	90900	22200	328
4.5	5520	1.4	312	12.0	**—**	**306R4**	**BN100LB4**	**M3LB4**	25400	28900	57800	66700	21200	304
4.7	5310	2.6	300	15.0	**—**	**307R4**	**BN100LB4**	**M3LB4**	30300	37800	68100	89600	26900	316
4.9	5130	1.0	290	12.0	**—**	**305R4**	**BN100LB4**	**M3LB4**	21100	24100	40700	48200	14200	292
4.9	5260	1.0	288	7.5	**306L3**	**—**	**BN100LB4**	**M3LB4**	25100	28600	57200	66000	20600	302
4.9	5120	1.6	289	12.0	**—**	**306R4**	**BN100LB4**	**M3LB4**	25100	28600	57200	66000	20600	304
5.0	5170	2.2	284	11.0	**307L3**	**—**	**BN100LB4**	**M3LB4**	30000	37500	67600	88900	26400	314
5.0	5040	2.2	284	15.0	**—**	**307R4**	**BN100LB4**	**M3LB4**	30000	37500	67600	88900	26400	316
5.3	4900	1.1	268	7.5	**306L3**	**—**	**BN100LB4**	**M3LB4**	25000	28500	57000	65800	20100	302
5.7	4400	1.9	249	12.0	**—**	**306R4**	**BN100LB4**	**M3LB4**	25000	28500	57000	65800	19600	304
5.9	4350	1.9	238	7.5	**306L3**	**—**	**BN100LB4**	**M3LB4**	25000	28500	57000	65800	19300	302
5.9	4370	2.0	239	11.0	**307L3**	**—**	**BN100LB4**	**M3LB4**	30000	37500	67500	88800	24900	314
5.9	4370	3.0	239	11.0	**309L3**	**—**	**BN100LB4**	**—**	—	—	69000	88800	19900	326
6.1	4080	1.9	230	12.0	**—**	**306R4**	**BN100LB4**	**M3LB4**	25000	28500	57000	65800	19100	304
6.1	4110	2.7	232	15.0	**—**	**307R4**	**BN100LB4**	**M3LB4**	30000	37500	67500	88800	24700	316
6.4	4020	1.2	220	7.5	**305L3**	**—**	**BN100LB4**	**M3LB4**	21000	24000	40500	48000	12900	290
6.4	4050	1.6	222	7.5	**306L3**	**—**	**BN100LB4**	**M3LB4**	25000	28500	57000	65800	18900	302
6.6	3790	1.0	214	12.0	**—**	**304R4**	**BN100LB4**	**M3LB4**	21000	24000	40500	48000	12800	280
6.6	3790	1.4	214	12.0	**—**	**305R4**	**BN100LB4**	**M3LB4**	21000	24000	40500	48000	12800	292
6.6	3780	2.6	214	12.0	**—**	**306R4**	**BN100LB4**	**M3LB4**	25000	28500	57000	65800	18700	304
6.9	3740	2.2	205	7.5	**306L3**	**—**	**BN100LB4**	**M3LB4**	25000	28500	57000	65800	18400	302
7.4	3470	1.0	190	7.5	**305L3**	**—**	**BN100LB4**	**M3LB4**	21000	24000	40500	48000	12300	290
7.4	3460	1.9	190	7.5	**306L3**	**—**	**BN100LB4**	**M3LB4**	25000	28500	57000	65800	17900	302
7.6	3270	1.1	185	12.0	**—**	**304R4**	**BN100LB4**	**M3LB4**	21000	24000	40500	48000	12200	280
7.6	3270	1.4	185	12.0	**—**	**305R4**	**BN100LB4**	**M3LB4**	21000	24000	40500	48000	12200	292
7.8	3200	2.9	181	12.0	**—**	**306R4**	**BN100LB4**	**M3LB4**	25000	28500	57000	65800	17700	304
7.9	3240	1.4	178	7.5	**305L3**	**—**	**BN100LB4**	**M3LB4**	21000	24000	40500	48000	12000	290
8.4	2970	2.5	168	12.0	**—**	**306R4**	**BN100LB4**	**M3LB4**	25000	28500	57000	65800	17200	304

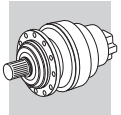

A

P_1 = 3 kW

n_2 min^{-1}	M_{n2} Nm	f_S	i	P_t kW					Rn_2 [N] MC	MZ	HC/PC	HZ/PZ	FZ	
8.6	2990	1.5	164	7.5	**305L3**	**—**	**BN100LB4**	**M3LB4**	21000	24000	40500	48000	11700	290
8.9	2800	1.0	158	12.0	**—**	**303R4**	**BN100LB4**	**M3LB4**	21000	24000	40500	48000	11600	268
8.9	2800	1.3	158	12.0	**—**	**304R4**	**BN100LB4**	**M3LB4**	21000	24000	40500	48000	11600	280
8.9	2800	1.9	158	12.0	**—**	**305R4**	**BN100LB4**	**M3LB4**	21000	24000	40500	48000	11600	292
9.2	2780	1.3	152	7.5	**305L3**	**—**	**BN100LB4**	**M3LB4**	21000	24000	40500	48000	11400	290
9.3	2770	2.7	152	7.5	**306L3**	**—**	**BN100LB4**	**M3LB4**	25000	28500	57000	65800	16700	302
9.4	2730	1.3	150	7.5	**304L3**	**—**	**BN100LB4**	**M3LB4**	21000	24000	40500	48000	11400	278
9.5	2620	1.3	148	12.0	**—**	**304R4**	**BN100LB4**	**M3LB4**	21000	24000	40500	48000	11300	280
9.5	2620	1.7	148	12.0	**—**	**305R4**	**BN100LB4**	**M3LB4**	21000	24000	40500	48000	11300	292
9.8	2630	2.1	144	14.0	**—**	**306R3**	**BN100LB4**	**M3LB4**	25000	28500	57000	65800	16400	304
10.0	2580	1.0	141	7.5	**303L3**	**—**	**BN100LB4**	**M3LB4**	21000	24000	40500	48000	11200	266
10.0	2580	1.4	141	7.5	**304L3**	**—**	**BN100LB4**	**M3LB4**	21000	24000	40500	48000	11200	278
10.0	2580	2.0	141	7.5	**305L3**	**—**	**BN100LB4**	**M3LB4**	21000	24000	40500	48000	11200	290
10.8	2380	1.5	130	7.5	**304L3**	**—**	**BN100LB4**	**M3LB4**	20500	23400	39600	46900	10900	278
10.9	2290	1.2	129	12.0	**—**	**303R4**	**BN100LB4**	**M3LB4**	20400	23300	39500	46800	10800	268
10.9	2290	1.5	129	12.0	**—**	**304R4**	**BN100LB4**	**M3LB4**	20400	23300	39500	46800	10800	280
10.9	2290	2.3	129	12.0	**—**	**305R4**	**BN100LB4**	**M3LB4**	20400	23300	39500	46800	10800	292
11.3	2270	1.6	124	7.5	**305L3**	**—**	**BN100LB4**	**M3LB4**	20100	23000	39000	46200	10700	290
11.6	2210	1.1	121	14.0	**—**	**304R3**	**BN100LB4**	**M3LB4**	20000	22800	38700	45900	10600	280
11.8	2180	3.0	119	14.0	**—**	**306R3**	**BN100LB4**	**M3LB4**	23600	26900	54200	62600	15400	304
12.3	2090	1.7	114	14.0	**—**	**305R3**	**BN100LB4**	**M3LB4**	19600	22400	38000	45100	10400	292
12.5	2060	1.7	113	7.5	**305L3**	**—**	**BN100LB4**	**M3LB4**	19500	22300	37900	44900	10300	290
12.8	2020	1.7	111	7.5	**304L3**	**—**	**BN100LB4**	**M3LB4**	19400	22100	37600	44600	10300	278
12.9	1940	1.7	109	12.0	**—**	**304R4**	**BN100LB4**	**M3LB4**	19300	22100	37500	44500	10200	280
13.3	1870	0.9	106	10.0	**—**	**301R4**	**BN100LB4**	**—**	5910	5910	19700	21600	3370	258
13.5	1910	1.4	105	7.5	**303L3**	**—**	**BN100LB4**	**M3LB4**	19000	21700	37000	43900	10100	266
13.5	1910	1.8	105	7.5	**304L3**	**—**	**BN100LB4**	**M3LB4**	19000	21700	37000	43900	10100	278
13.5	1910	2.7	105	7.5	**305L3**	**—**	**BN100LB4**	**M3LB4**	19000	21700	37000	43900	10100	290
14.5	1770	1.3	97.0	14.0	**—**	**304R3**	**BN100LB4**	**M3LB4**	18500	21200	36200	42900	9830	280
15.4	1670	1.1	91.5	14.0	**—**	**303R3**	**BN100LB4**	**M3LB4**	18200	20800	35600	42200	9640	268
15.4	1670	2.1	91.5	14.0	**—**	**305R3**	**BN100LB4**	**M3LB4**	18200	20800	35600	42200	9640	292
15.6	1650	1.4	90.2	7.5	**303L3**	**—**	**BN100LB4**	**M3LB4**	18100	20700	35400	42000	9600	266
15.6	1650	2.0	90.2	7.5	**304L3**	**—**	**BN100LB4**	**M3LB4**	18100	20700	35400	42000	9600	278
15.6	1650	2.6	90.2	7.5	**305L3**	**—**	**BN100LB4**	**M3LB4**	18100	20700	35400	42000	9600	290
15.8	1580	2.1	89.4	12.0	**—**	**304R4**	**BN100LB4**	**M3LB4**	18000	20600	35300	41900	9570	280
16.5	1560	1.1	85.6	7.5	**301L3**	**—**	**BN100LB4**	**M3LB4**	5500	5500	18500	20200	3140	256
17.9	1440	1.1	78.7	12.0	**—**	**301R3**	**BN100LB4**	**M3LB4**	5350	5350	18000	19700	3060	258
17.9	1440	1.5	78.7	14.0	**—**	**303R3**	**BN100LB4**	**M3LB4**	17300	19800	34000	40300	9170	268
17.9	1440	2.0	78.7	14.0	**—**	**304R3**	**BN100LB4**	**M3LB4**	17300	19800	34000	40300	9170	280
18.2	1410	1.2	77.5	7.5	**301L3**	**—**	**BN100LB4**	**M3LB4**	5320	5320	18000	19600	3040	256
18.3	1410	1.8	77.2	7.5	**303L3**	**—**	**BN100LB4**	**M3LB4**	17200	19600	33800	40100	9110	266
18.3	1410	2.5	77.2	7.5	**304L3**	**—**	**BN100LB4**	**M3LB4**	17200	19600	33800	40100	9110	278
19.2	1340	1.4	73.3	14.0	**—**	**303R3**	**BN100LB4**	**M3LB4**	16900	19300	33300	39500	8960	268
19.2	1340	2.7	73.3	14.0	**—**	**305R3**	**BN100LB4**	**M3LB4**	16900	19300	33300	39500	8960	292
19.5	1320	1.7	72.3	7.5	**303L3**	**—**	**BN100LB4**	**M3LB4**	16800	19200	33100	39300	8920	266
19.5	1320	2.5	72.3	7.5	**304L3**	**—**	**BN100LB4**	**M3LB4**	16800	19200	33100	39300	8920	278
20.2	1280	1.0	69.9	7.5	**301L3**	**—**	**BN100LB4**	**M3LB4**	5140	5140	17400	19000	2940	256
20.7	1250	1.0	68.2	12.0	**—**	**301R3**	**BN100LB4**	**M3LB4**	5100	5100	17300	18900	2920	258
21.8	1220	0.9	64.8	7.5	**301L2**	**—**	**BN100LB4**	**M3LB4**	5020	5020	17000	18600	2870	256
22.3	1150	1.4	63.2	7.5	**301L3**	**—**	**BN100LB4**	**M3LB4**	4980	4980	16900	18500	2840	256
22.4	1150	1.4	62.9	12.0	**—**	**301R3**	**BN100LB4**	**M3LB4**	4970	4970	16900	18400	2840	258
22.4	1150	2.2	63.1	7.5	**303L3**	**—**	**BN100LB4**	**M3LB4**	16100	18400	31800	37700	8520	266
22.4	1150	1.9	63.1	14.0	**—**	**303R3**	**BN100LB4**	**M3LB4**	16100	18400	31800	37700	8520	268
22.4	1150	2.5	63.1	14.0	**—**	**304R3**	**BN100LB4**	**M3LB4**	16100	18400	31800	37700	8520	280
23.8	1110	2.1	59.1	9.0	**304L2**	**—**	**BN100LB4**	**M3LB4**	15700	18000	31200	37000	8340	278
25.3	1050	1.7	55.8	9.0	**303L2**	**—**	**BN100LB4**	**M3LB4**	15400	17600	30700	36300	8180	266
26.0	990	1.8	54.2	14.0	**—**	**303R3**	**BN100LB4**	**M3LB4**	15300	17400	30400	36000	8100	268
26.4	970	2.2	53.4	7.5	**303L3**	**—**	**BN100LB4**	**M3LB4**	15200	17400	30300	35900	8060	266
27.2	980	1.3	51.9	7.5	**301L2**	**—**	**BN100LB4**	**M3LB4**	4660	4660	15900	17400	2660	256
27.3	940	1.7	51.6	7.5	**301L3**	**—**	**BN100LB4**	**M3LB4**	4650	4650	15900	17400	2660	256
28.0	920	0.9	50.4	12.0	**—**	**300R3**	**BN100LB4**	**M3LB4**	4610	4610	15800	18400	2640	248
28.0	920	1.8	50.4	12.0	**—**	**301R3**	**BN100LB4**	**M3LB4**	4610	4610	15800	17300	2640	258
28.1	920	2.6	50.3	14.0	**—**	**303R3**	**BN100LB4**	**M3LB4**	14900	17000	29700	35200	7900	268
29.8	890	2.7	47.3	9.0	**304L2**	**—**	**BN100LB4**	**M3LB4**	14600	16700	29200	34600	7740	278
30.0	850	2.5	46.6	14.0	**—**	**303R3**	**BN100LB4**	**M3LB4**	14500	16600	29100	34400	7700	268

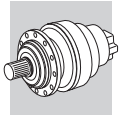

A

P_1 = 3 kW

n_2 min^{-1}	M_{n2} Nm	f_S	i	P_t kW					Rn_2 [N] MC	MZ	HC/PC	HZ/PZ	FZ	
32	840	2.2	44.6	9.0	**303L2**	**—**	**BN100LB4**	**M3LB4**	14300	16400	28700	34000	7590	266
33	780	2.7	42.6	14.0	**—**	**303R3**	**BN100LB4**	**M3LB4**	14100	16100	28300	33500	7470	268
34	780	1.7	41.5	7.5	**301L2**	**—**	**BN100LB4**	**M3LB4**	4330	4330	14900	16300	2470	256
34	750	1.7	41.2	12.0	**—**	**301R3**	**BN100LB4**	**M3LB4**	4310	4310	14900	16200	2460	258
37	720	1.2	38.4	7.5	**300L2**	**—**	**BN100LB4**	**M3LB4**	4210	4210	14600	16900	2410	246
37	720	2.1	38.4	7.5	**301L2**	**—**	**BN100LB4**	**M3LB4**	4210	4210	14600	15900	2410	256
37	720	3.0	38.4	9.0	**303L2**	**—**	**BN100LB4**	**M3LB4**	13600	15600	27400	32500	7220	266
38	680	1.2	37.3	12.0	**—**	**300R3**	**BN100LB4**	**M3LB4**	4170	4170	14400	16800	2380	248
38	680	2.4	37.3	12.0	**—**	**301R3**	**BN100LB4**	**M3LB4**	4170	4170	14400	15800	2380	258
39	670	2.7	35.8	9.0	**303L2**	**—**	**BN100LB4**	**M3LB4**	13300	15200	26800	31800	7050	266
42	630	1.0	33.3	7.5	**300L2**	**—**	**BN100LB4**	**M3LB4**	4020	4020	13900	16200	2290	246
42	630	2.1	33.3	7.5	**301L2**	**—**	**BN100LB4**	**M3LB4**	4020	4020	13900	15200	2290	256
46	580	1.5	30.7	7.5	**300L2**	**—**	**BN100LB4**	**M3LB4**	3910	3910	13600	15800	2230	246
46	560	1.5	30.4	12.0	**—**	**300R3**	**BN100LB4**	**M3LB4**	3900	3900	13600	15800	2230	248
46	580	2.7	30.7	7.5	**301L2**	**—**	**BN100LB4**	**M3LB4**	3910	3910	13600	14900	2230	256
46	560	2.9	30.4	12.0	**—**	**301R3**	**BN100LB4**	**M3LB4**	3900	3900	13600	14800	2230	258
57	460	1.8	24.6	7.5	**300L2**	**—**	**BN100LB4**	**M3LB4**	3630	3630	12700	14800	2070	246
57	450	1.6	24.8	12.0	**—**	**300R3**	**BN100LB4**	**M3LB4**	3640	3640	12800	14800	2080	248
57	470	1.8	24.8	18.0	**—**	**303R2**	**BN100LB4**	**M3LB4**	11800	13400	24000	28500	6240	268
70	380	1.7	20.1	7.5	**300L2**	**—**	**BN100LB4**	**M3LB4**	3390	3390	12000	13900	1940	246
76	350	1.1	18.5	12.0	**—**	**300R2**	**BN100LB4**	**M3LB4**	3300	3300	11700	13600	1890	248
76	350	2.1	18.5	12.0	**—**	**301R2**	**BN100LB4**	**M3LB4**	3300	3300	11700	12800	1890	258
78	340	2.2	18.2	7.5	**300L2**	**—**	**BN100LB4**	**M3LB4**	3280	3280	11600	13500	1880	246
95	280	2.6	14.8	7.5	**300L2**	**—**	**BN100LB4**	**M3LB4**	3070	3070	10900	12700	1750	246
96	280	1.8	14.8	12.0	**—**	**300R2**	**BN100LB4**	**M3LB4**	3060	3060	10900	12700	1750	248
119	220	2.7	11.8	12.0	**—**	**300R2**	**BN100LB4**	**M3LB4**	2850	2850	10200	11900	1630	248
157	170	1.9	9.00	7.5	**300L1**	**—**	**BN100LB4**	**M3LB4**	2600	2600	9420	11000	1480	246
196	140	3.0	7.20	7.5	**300L1**	**—**	**BN100LB4**	**M3LB4**	2410	2410	8810	10200	1380	246

P_1 = 4 kW

n_2 min^{-1}	M_{n2} Nm	f_S	i	P_t kW					Rn_2 [N] MC	MZ	HC/PC	HZ/PZ	FZ	
0.79	43400	1.3	1817	11.0	**313ML4**	**—**	**BN112M4**	**—**	—	—	184900	216700	80000	362
0.81	42200	1.0	1766	11.0	**311ML4**	**—**	**BN112M4**	**—**	—	—	127100	129700	65000	350
0.85	40200	0.9	1680	11.0	**311ML4**	**—**	**BN112M4**	**—**	—	—	126200	128800	65000	350
0.95	35900	1.6	1502	11.0	**313ML4**	**—**	**BN112M4**	**—**	—	—	180000	210900	80000	362
1.0	33800	1.2	1415	11.0	**311ML4**	**—**	**BN112M4**	**—**	—	—	123200	125700	64800	350
1.0	33300	1.5	1394	11.0	**313ML4**	**—**	**BN112M4**	**—**	—	—	178100	208700	79300	362
1.1	30300	1.8	1266	11.0	**313ML4**	**—**	**BN112M4**	**—**	—	—	175600	205800	76800	362
1.2	27800	1.0	1164	11.0	**310ML4**	**—**	**BN112M4**	**—**	—	—	95300	120900	60700	338
1.2	29400	1.6	1230	11.0	**311ML4**	**—**	**BN112M4**	**—**	—	—	120700	123200	61800	350
1.3	26700	1.9	1117	11.0	**313ML4**	**—**	**BN112M4**	**—**	—	—	172500	202200	73700	362
1.4	23900	1.2	1002	11.0	**310ML4**	**—**	**BN112M4**	**—**	—	—	93300	118300	57700	338
1.4	25300	1.8	1058	11.0	**311ML4**	**—**	**BN112M4**	**—**	—	—	118100	120600	58800	350
1.4	24200	2.2	1014	11.0	**313ML4**	**—**	**BN112M4**	**—**	—	—	170100	199400	71300	362
1.5	23300	1.4	974	11.0	**310ML4**	**—**	**BN112M4**	**—**	—	—	92900	117800	57200	338
1.5	23600	1.9	986	11.0	**311ML4**	**—**	**BN112M4**	**—**	—	—	117000	119300	57400	350
1.6	21500	1.0	898	15.0	**—**	**310MR4**	**BN112M4**	**—**	—	—	91900	116500	55700	340
1.6	21300	2.5	889	11.0	**313ML4**	**—**	**BN112M4**	**—**	—	—	167000	195700	68300	362
1.7	19700	2.2	825	11.0	**311ML4**	**—**	**BN112M4**	**—**	—	—	114000	116300	54100	350
1.8	19100	0.9	801	7.5	**309L4**	**—**	**BN112M4**	**—**	—	—	79900	102900	29700	326
1.8	19100	1.4	798	11.0	**310ML4**	**—**	**BN112M4**	**—**	—	—	90300	114500	53500	338
1.8	18900	2.6	790	11.0	**313ML4**	**—**	**BN112M4**	**—**	—	—	164200	192400	65600	362
1.8	18600	1.9	778	22.0	**—**	**313MR4**	**BN112M4**	**—**	—	—	163800	192000	65300	364
1.9	18100	1.4	757	15.0	**—**	**310MR4**	**BN112M4**	**—**	—	—	89600	113600	52600	340
1.9	17800	1.8	746	22.0	**—**	**311MR4**	**BN112M4**	**—**	—	—	112400	114700	52300	352
2.0	17300	1.2	722	7.5	**309L4**	**—**	**BN112M4**	**—**	—	—	78800	101400	28700	326
2.0	17300	1.5	726	11.0	**310ML4**	**—**	**BN112M4**	**—**	—	—	89100	113000	51800	338
2.1	16500	0.9	690	15.0	**—**	**309R4**	**BN112M4**	**—**	—	—	78200	100700	28200	328
2.2	15600	1.2	654	7.5	**309L4**	**—**	**BN112M4**	**—**	—	—	77600	99900	27700	326
2.2	15200	1.7	637	11.0	**310ML4**	**—**	**BN112M4**	**—**	—	—	87400	110900	49600	338

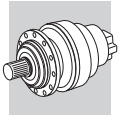

A

P_1 = 4 kW

n_2 min^{-1}	M_{n2} Nm	f_S	i	P_t kW					Rn_2 [N] MC	MZ	HC/PC	HZ/PZ	FZ	
2.2	15300	1.4	639	15.0	—	**310MR4**	**BN112M4**	—	—	—	87500	110900	49700	340
2.3	15000	2.8	627	11.0	**311ML4**	—	**BN112M4**	—	—	—	109600	111900	49400	350
2.3	15000	2.7	629	22.0	—	**311MR4**	**BN112M4**	—	—	—	109700	111900	49400	352
2.4	14100	1.8	590	11.0	**310ML4**	—	**BN112M4**	—	—	—	86500	109700	48400	338
2.4	14100	1.4	590	15.0	—	**310MR4**	**BN112M4**	—	—	—	86500	109700	48400	340
2.5	13800	1.1	579	7.5	**307L4**	—	**BN112M4**	**M3LC4**	33200	41500	74600	98200	33300	314
2.5	13900	0.9	581	15.0	—	**307R4**	**BN112M4**	**M3LC4**	33200	41500	74700	98300	33300	316
2.5	13800	1.5	579	7.5	**309L4**	—	**BN112M4**	—	—	—	76300	98200	26600	326
2.5	13900	1.1	581	15.0	—	**309R4**	**BN112M4**	—	—	—	76400	98300	26700	328
2.8	12200	1.2	509	7.5	**307L4**	—	**BN112M4**	**M3LC4**	32600	40700	73300	96400	31900	314
2.8	12200	1.2	509	7.5	**309L4**	—	**BN112M4**	—	—	—	74900	96400	25500	326
2.8	12100	2.1	507	11.0	**310ML4**	—	**BN112M4**	—	—	—	84700	107300	46000	338
2.8	12400	2.0	517	15.0	—	**310MR4**	**BN112M4**	—	—	—	84900	107600	46300	340
2.9	11700	1.2	490	15.0	—	**309R4**	**BN112M4**	—	—	—	74500	95900	25200	328
2.9	11700	2.7	490	22.0	—	**311MR4**	**BN112M4**	—	—	—	105800	108000	45500	352
3.1	11100	1.1	465	7.5	**307L4**	—	**BN112M4**	**M3LC4**	32200	40200	72400	95200	30900	314
3.1	11100	1.7	465	7.5	**309L4**	—	**BN112M4**	—	—	—	74000	95200	24800	326
3.1	10900	1.3	457	15.0	—	**309R4**	**BN112M4**	—	—	—	73800	94900	24600	328
3.1	10900	1.8	454	15.0	—	**310MR4**	**BN112M4**	—	—	—	83300	105700	44300	340
3.2	10600	0.9	444	6.0	**306L4**	—	**BN112M4**	**M3LC4**	26600	30400	60700	70100	23700	302
3.2	10800	1.2	453	15.0	—	**307R4**	**BN112M4**	**M3LC4**	32000	40000	72100	94800	30700	316
3.2	10800	2.7	453	11.0	**310ML4**	—	**BN112M4**	—	—	—	83300	105600	44300	338
3.5	9690	1.2	406	7.5	**307L4**	—	**BN112M4**	**M3LC4**	31500	39400	71000	93300	29600	314
3.5	9880	1.2	413	15.0	—	**307R4**	**BN112M4**	**M3LC4**	31600	39500	71100	93600	29800	316
3.5	9690	1.9	406	7.5	**309L4**	—	**BN112M4**	—	—	—	72500	93300	23700	326
3.5	9880	1.8	413	15.0	—	**309R4**	**BN112M4**	—	—	—	72700	93600	23800	328
3.7	9360	2.0	392	11.0	**310ML4**	—	**BN112M4**	—	—	—	81600	103400	42200	338
3.7	9150	2.6	383	15.0	—	**310MR4**	**BN112M4**	—	—	—	81300	103100	41900	340
3.8	8950	1.6	374	15.0	—	**309R4**	**BN112M4**	—	—	—	71700	92300	23000	328
3.9	8670	1.4	363	15.0	—	**307R4**	**BN112M4**	**M3LC4**	31000	38800	69800	91900	28500	316
4.1	8340	1.8	349	7.5	**307L4**	—	**BN112M4**	**M3LC4**	30900	38600	69400	91400	28100	314
4.1	8340	2.5	349	7.5	**309L4**	—	**BN112M4**	—	—	—	71000	91400	22500	326
4.3	8290	1.1	336	11.0	**307L3**	—	**BN112M4**	**M3LC4**	30700	38400	69100	90900	27800	314
4.3	7920	1.5	331	15.0	—	**307R4**	**BN112M4**	**M3LC4**	30600	38300	68900	90700	27600	316
4.3	8290	1.6	336	11.0	**309L3**	—	**BN112M4**	—	—	—	70600	90900	22200	326
4.3	7920	2.2	331	15.0	—	**309R4**	**BN112M4**	—	—	—	70500	90700	22100	328
4.6	7450	1.0	312	12.0	—	**306R4**	**BN112M4**	**M3LC4**	25300	28900	57700	66600	21100	304
4.8	7170	2.0	300	15.0	—	**307R4**	**BN112M4**	**M3LC4**	30200	37800	68000	89400	26700	316
4.9	6910	1.2	289	12.0	—	**306R4**	**BN112M4**	**M3LC4**	25000	28500	57100	65900	20500	304
5.0	6990	1.6	284	11.0	**307L3**	—	**BN112M4**	**M3LC4**	30000	37500	67500	88800	26200	314
5.0	6800	1.7	284	15.0	—	**307R4**	**BN112M4**	**M3LC4**	30000	37500	67500	88800	26300	316
5.0	6990	2.3	284	11.0	**309L3**	—	**BN112M4**	—	—	—	69000	88800	21000	326
5.0	6800	2.5	284	15.0	—	**309R4**	**BN112M4**	—	—	—	69000	88800	21000	328
5.5	6170	2.4	258	15.0	—	**307R4**	**BN112M4**	**M3LC4**	30000	37500	67500	88800	25400	316
5.5	6170	2.8	258	15.0	—	**309R4**	**BN112M4**	—	—	—	69000	88800	20300	328
5.8	5940	1.4	249	12.0	—	**306R4**	**BN112M4**	**M3LC4**	25000	28500	57000	65800	19500	304
6.0	5870	1.4	238	7.5	**306L3**	—	**BN112M4**	**M3LC4**	25000	28500	57000	65800	19300	302
6.0	5900	1.5	239	11.0	**307L3**	—	**BN112M4**	**M3LC4**	30000	37500	67500	88800	24800	314
6.0	5900	2.2	239	11.0	**309L3**	—	**BN112M4**	—	—	—	69000	88800	19800	326
6.2	5500	1.4	230	12.0	—	**306R4**	**BN112M4**	**M3LC4**	25000	28500	57000	65800	19000	304
6.2	5550	2.0	232	15.0	—	**307R4**	**BN112M4**	**M3LC4**	30000	37500	67500	88800	24600	316
6.4	5460	1.2	222	7.5	**306L3**	—	**BN112M4**	**M3LC4**	25000	28500	57000	65800	18800	302
6.4	5490	2.4	223	11.0	**309L3**	—	**BN112M4**	—	—	—	69000	88800	19400	326
6.5	5440	2.3	221	11.0	**307L3**	—	**BN112M4**	**M3LC4**	30000	37500	67500	88800	24100	314
6.7	5120	1.1	214	12.0	—	**305R4**	**BN112M4**	**M3LC4**	21000	24000	40500	48000	12700	292
6.7	5110	1.9	214	12.0	—	**306R4**	**BN112M4**	**M3LC4**	25000	28500	57000	65800	18600	304
7.0	5050	1.6	205	7.5	**306L3**	—	**BN112M4**	**M3LC4**	25000	28500	57000	65800	18300	302
7.0	4920	2.9	206	15.0	—	**307R4**	**BN112M4**	**M3LC4**	30000	37500	67500	88800	23600	316
7.1	4970	2.2	202	11.0	**307L3**	—	**BN112M4**	**M3LC4**	30000	37500	67500	88800	23400	314
7.5	4680	1.4	190	7.5	**306L3**	—	**BN112M4**	**M3LC4**	25000	28500	57000	65800	17900	302
7.7	4420	1.0	185	12.0	—	**305R4**	**BN112M4**	**M3LC4**	21000	24000	40500	48000	12100	292
7.9	4330	2.2	181	12.0	—	**306R4**	**BN112M4**	**M3LC4**	25000	28500	57000	65800	17600	304
8.1	4370	1.0	178	7.5	**305L3**	—	**BN112M4**	**M3LC4**	21000	24000	40500	48000	12000	290
8.1	4360	2.8	177	11.0	**307L3**	—	**BN112M4**	**M3LC4**	30000	37500	67500	88800	22400	314
8.5	4010	1.9	168	12.0	—	**306R4**	**BN112M4**	**M3LC4**	25000	28500	57000	65800	17100	304

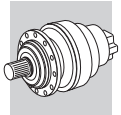

P_1 = 4 kW

n_2 min^{-1}	M_{n2} Nm	f_S	i	P_t kW					Rn_2 [N] MC	MZ	HC/PC	HZ/PZ	FZ	
8.7	4030	1.1	164	7.5	**305L3**	**—**	**BN112M4**	**M3LC4**	21000	24000	40500	48000	11700	290
8.7	3950	2.8	165	15.0	**—**	**307R4**	**BN112M4**	**M3LC4**	30000	37500	67500	88800	21900	316
8.9	3980	2.7	162	11.0	**307L3**	**—**	**BN112M4**	**M3LC4**	30000	37500	67500	88800	21800	314
9.0	3780	0.9	158	12.0	**—**	**304R4**	**BN112M4**	**M3LC4**	21000	24000	40500	48000	11500	280
9.0	3780	1.4	158	12.0	**—**	**305R4**	**BN112M4**	**M3LC4**	21000	24000	40500	48000	11500	292
9.1	3770	2.6	158	12.0	**—**	**306R4**	**BN112M4**	**M3LC4**	25000	28500	57000	65800	16800	304
9.4	3760	1.0	152	7.5	**305L3**	**—**	**BN112M4**	**M3LC4**	21000	24000	40500	48000	11400	290
9.4	3750	2.0	152	7.5	**306L3**	**—**	**BN112M4**	**M3LC4**	25000	28500	57000	65800	16600	302
9.6	3680	0.9	150	7.5	**304L3**	**—**	**BN112M4**	**M3LC4**	21000	24000	40500	48000	11300	278
9.7	3540	1.0	148	12.0	**—**	**304R4**	**BN112M4**	**M3LC4**	21000	24000	40500	48000	11300	280
9.7	3540	1.3	148	12.0	**—**	**305R4**	**BN112M4**	**M3LC4**	21000	24000	40500	48000	11300	292
9.9	3550	1.5	144	14.0	**—**	**306R3**	**BN112M4**	**M3LC4**	25000	28500	57000	65800	16300	304
10.1	3490	1.0	141	7.5	**304L3**	**—**	**BN112M4**	**M3LC4**	20900	23900	40400	47800	11100	278
10.1	3490	1.5	141	7.5	**305L3**	**—**	**BN112M4**	**M3LC4**	20900	23900	40400	47800	11100	290
10.1	3470	2.3	141	7.5	**306L3**	**—**	**BN112M4**	**M3LC4**	24900	28400	56800	65500	16200	302
11.0	3210	1.1	130	7.5	**304L3**	**—**	**BN112M4**	**M3LC4**	20400	23300	39400	46700	10800	278
11.1	3090	1.1	129	12.0	**—**	**304R4**	**BN112M4**	**M3LC4**	20300	23200	39300	46600	10800	280
11.1	3090	1.7	129	12.0	**—**	**305R4**	**BN112M4**	**M3LC4**	20300	23200	39300	46600	10800	292
11.5	3070	1.2	124	7.5	**305L3**	**—**	**BN112M4**	**M3LC4**	20100	22900	38800	46000	10600	290
11.8	2990	2.6	121	7.5	**306L3**	**—**	**BN112M4**	**M3LC4**	23700	27000	54200	62600	15400	302
11.9	2950	2.9	120	22.0	**—**	**307R3**	**BN112M4**	**M3LC4**	28300	35300	64000	84200	19700	316
12.0	2940	2.2	119	14.0	**—**	**306R3**	**BN112M4**	**M3LC4**	23500	26800	54000	62300	15300	304
12.5	2820	1.3	114	14.0	**—**	**305R3**	**BN112M4**	**M3LC4**	19500	22300	37900	44900	10300	292
12.7	2780	1.3	113	7.5	**305L3**	**—**	**BN112M4**	**M3LC4**	19400	22200	37700	44700	10300	290
12.7	2770	2.7	112	7.5	**306L3**	**—**	**BN112M4**	**M3LC4**	23100	26300	53000	61200	15000	302
12.9	2720	1.2	111	7.5	**304L3**	**—**	**BN112M4**	**M3LC4**	19300	22000	37500	44400	10200	278
13.1	2620	1.3	109	12.0	**—**	**304R4**	**BN112M4**	**M3LC4**	19200	22000	37400	44300	10200	280
13.7	2580	1.0	105	7.5	**303L3**	**—**	**BN112M4**	**M3LC4**	18900	21600	36900	43700	10000	266
13.7	2580	1.4	105	7.5	**304L3**	**—**	**BN112M4**	**M3LC4**	18900	21600	36900	43700	10000	278
13.7	2580	2.0	105	7.5	**305L3**	**—**	**BN112M4**	**M3LC4**	18900	21600	36900	43700	10000	290
14.5	2430	2.7	98.5	14.0	**—**	**306R3**	**BN112M4**	**M3LC4**	22100	25200	51000	58800	14300	304
14.7	2390	1.0	97.0	14.0	**—**	**304R3**	**BN112M4**	**M3LC4**	18500	21100	36000	42700	9790	280
15.6	2260	1.6	91.5	14.0	**—**	**305R3**	**BN112M4**	**M3LC4**	18100	20700	35400	42000	9600	292
15.9	2220	1.0	90.2	7.5	**303L3**	**—**	**BN112M4**	**M3LC4**	18000	20600	35300	41800	9550	266
15.9	2220	1.5	90.2	7.5	**304L3**	**—**	**BN112M4**	**M3LC4**	18000	20600	35300	41800	9550	278
15.9	2220	1.9	90.2	7.5	**305L3**	**—**	**BN112M4**	**M3LC4**	18000	20600	35300	41800	9550	290
16.0	2140	1.6	89.4	12.0	**—**	**304R4**	**BN112M4**	**M3LC4**	18000	20500	35200	41700	9520	280
18.2	1940	1.1	78.7	14.0	**—**	**303R3**	**BN112M4**	**M3LC4**	17200	19700	33900	40100	9130	268
18.2	1940	1.5	78.7	14.0	**—**	**304R3**	**BN112M4**	**M3LC4**	17200	19700	33900	40100	9130	280
18.2	1940	2.2	78.7	14.0	**—**	**305R3**	**BN112M4**	**M3LC4**	17200	19700	33900	40100	9130	292
18.5	1900	1.3	77.2	7.5	**303L3**	**—**	**BN112M4**	**M3LC4**	17100	19500	33700	39900	9070	266
18.5	1900	1.8	77.2	7.5	**304L3**	**—**	**BN112M4**	**M3LC4**	17100	19500	33700	39900	9070	278
18.5	1900	2.5	77.2	7.5	**305L3**	**—**	**BN112M4**	**M3LC4**	17100	19500	33700	39900	9070	290
19.5	1810	1.0	73.3	14.0	**—**	**303R3**	**BN112M4**	**M3LC4**	16800	19200	33100	39300	8920	268
19.5	1810	2.0	73.3	14.0	**—**	**305R3**	**BN112M4**	**M3LC4**	16800	19200	33100	39300	8920	292
19.8	1780	1.3	72.3	7.5	**303L3**	**—**	**BN112M4**	**M3LC4**	16700	19100	33000	39100	8870	266
19.8	1780	1.9	72.3	7.5	**304L3**	**—**	**BN112M4**	**M3LC4**	16700	19100	33000	39100	8870	278
19.8	1780	2.3	72.3	7.5	**305L3**	**—**	**BN112M4**	**M3LC4**	16700	19100	33000	39100	8870	290
22.6	1560	1.1	63.2	7.5	**301L3**	**—**	**BN112M4**	**M3LC4**	4950	4950	16800	18400	2830	256
22.7	1550	1.1	62.9	12.0	**—**	**301R3**	**BN112M4**	**M3LC4**	4940	4940	16800	18400	2820	258
22.7	1550	1.6	63.1	7.5	**303L3**	**—**	**BN112M4**	**M3LC4**	16000	18300	31700	37500	8480	266
22.7	1550	1.4	63.1	14.0	**—**	**303R3**	**BN112M4**	**M3LC4**	16000	18300	31700	37500	8480	268
22.7	1550	2.2	63.1	7.5	**304L3**	**—**	**BN112M4**	**M3LC4**	16000	18300	31700	37500	8480	278
22.7	1550	1.8	63.1	14.0	**—**	**304R3**	**BN112M4**	**M3LC4**	16000	18300	31700	37500	8480	280
22.7	1550	2.8	63.1	14.0	**—**	**305R3**	**BN112M4**	**M3LC4**	16000	18300	31700	37500	8480	292
24.2	1500	1.6	59.1	9.0	**304L2**	**—**	**BN112M4**	**M3LC4**	15600	17900	31100	36800	8300	278
25.6	1420	1.3	55.8	9.0	**303L2**	**—**	**BN112M4**	**M3LC4**	15300	17500	30500	36200	8140	266
25.6	1420	2.5	55.8	9.0	**305L2**	**—**	**BN112M4**	**M3LC4**	15300	17500	30500	36200	8140	290
26.4	1340	1.4	54.2	14.0	**—**	**303R3**	**BN112M4**	**M3LC4**	15200	17400	30300	35900	8060	268
26.4	1340	2.7	54.2	14.0	**—**	**305R3**	**BN112M4**	**M3LC4**	15200	17400	30300	35900	8060	292
26.8	1320	1.7	53.4	7.5	**303L3**	**—**	**BN112M4**	**M3LC4**	15100	17300	30100	35700	8020	266
26.8	1320	2.5	53.4	7.5	**304L3**	**—**	**BN112M4**	**M3LC4**	15100	17300	30100	35700	8020	278
27.5	1320	1.0	51.9	7.5	**301L2**	**—**	**BN112M4**	**M3LC4**	4640	4640	15900	17300	2650	256
27.7	1270	1.3	51.6	7.5	**301L3**	**—**	**BN112M4**	**M3LC4**	4630	4630	15800	17300	2640	256
28.4	1240	1.3	50.4	12.0	**—**	**301R3**	**BN112M4**	**M3LC4**	4590	4590	15700	17200	2620	258

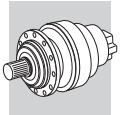

A

P_1 = 4 kW

n_2 min^{-1}	M_{n2} Nm	f_S	i	P_t kW					Rn_2 [N] MC	MZ	HC/PC	HZ/PZ	FZ	
28.4	1240	1.9	50.3	14.0	—	**303R3**	**BN112M4**	**M3LC4**	14800	16900	29600	35100	7860	268
28.4	1240	2.8	50.3	14.0	—	**304R3**	**BN112M4**	**M3LC4**	14800	16900	29600	35100	7860	280
30.0	1200	2.0	47.3	9.0	**304L2**	—	**BN112M4**	**M3LC4**	14500	16600	29100	34400	7700	278
31	1150	1.9	46.6	14.0	—	**303R3**	**BN112M4**	**M3LC4**	14500	16500	28900	34300	7670	268
31	1150	2.5	46.6	14.0	—	**304R3**	**BN112M4**	**M3LC4**	14500	16500	28900	34300	7670	280
32	1130	1.6	44.6	9.0	**303L2**	—	**BN112M4**	**M3LC4**	14200	16300	28600	33800	7560	266
33	1070	3.0	43.6	7.5	**304L3**	—	**BN112M4**	**M3LC4**	14100	16200	28400	33600	7500	278
34	1060	1.2	41.5	7.5	**301L2**	—	**BN112M4**	**M3LC4**	4300	4300	14800	16200	2460	256
34	1050	2.0	42.6	14.0	—	**303R3**	**BN112M4**	**M3LC4**	14000	16000	28200	33400	7440	268
35	1010	1.3	41.2	12.0	—	**301R3**	**BN112M4**	**M3LC4**	4290	4290	14800	16200	2450	258
37	970	1.6	38.4	7.5	**301L2**	—	**BN112M4**	**M3LC4**	4190	4190	14500	15800	2390	256
37	980	2.2	38.4	9.0	**303L2**	—	**BN112M4**	**M3LC4**	13500	15500	27300	32400	7190	266
37	980	2.9	38.4	9.0	**304L2**	—	**BN112M4**	**M3LC4**	13500	15500	27300	32400	7190	278
38	920	0.9	37.3	12.0	—	**300R3**	**BN112M4**	**M3LC4**	4150	4150	14400	16700	2370	248
38	920	1.7	37.3	12.0	—	**301R3**	**BN112M4**	**M3LC4**	4150	4150	14400	15700	2370	258
39	920	2.6	37.1	14.0	—	**303R3**	**BN112M4**	**M3LC4**	13400	15300	27000	32000	7110	268
40	910	2.0	35.8	9.0	**303L2**	—	**BN112M4**	**M3LC4**	13200	15100	26700	31700	7020	266
43	850	1.5	33.3	7.5	**301L2**	—	**BN112M4**	**M3LC4**	4000	4000	13900	15200	2280	256
45	780	2.7	31.5	14.0	—	**303R3**	**BN112M4**	**M3LC4**	12700	14500	25700	30500	6730	268
46	780	2.7	30.8	9.0	**303L2**	—	**BN112M4**	**M3LC4**	12600	14400	25500	30300	6680	266
47	780	1.1	30.7	7.5	**300L2**	—	**BN112M4**	**M3LC4**	3890	3890	13600	15800	2220	246
47	750	1.1	30.4	12.0	—	**300R3**	**BN112M4**	**M3LC4**	3880	3880	13500	15700	2220	248
47	780	2.0	30.7	7.5	**301L2**	—	**BN112M4**	**M3LC4**	3890	3890	13600	14800	2220	256
47	750	2.1	30.4	12.0	—	**301R3**	**BN112M4**	**M3LC4**	3880	3880	13500	14800	2220	258
54	670	2.7	26.4	9.0	**303L2**	—	**BN112M4**	**M3LC4**	12000	13700	24400	28900	6350	266
58	620	1.3	24.6	7.5	**300L2**	—	**BN112M4**	**M3LC4**	3610	3610	12700	14700	2070	246
58	610	1.2	24.8	12.0	—	**300R3**	**BN112M4**	**M3LC4**	3630	3630	12700	14800	2070	248
58	620	2.4	24.6	7.5	**301L2**	—	**BN112M4**	**M3LC4**	3610	3610	12700	13900	2070	256
58	610	2.3	24.8	12.0	—	**301R3**	**BN112M4**	**M3LC4**	3630	3630	12700	13900	2070	258
58	630	1.4	24.8	18.0	—	**303R2**	**BN112M4**	**M3LC4**	11700	13400	23900	28400	6210	268
71	510	1.3	20.1	7.5	**300L2**	—	**BN112M4**	**M3LC4**	3380	3380	11900	13900	1930	246
71	510	2.5	20.1	7.5	**301L2**	—	**BN112M4**	**M3LC4**	3380	3380	11900	13000	1930	256
78	470	1.6	18.5	12.0	—	**301R2**	**BN112M4**	**M3LC4**	3280	3280	11600	12700	1880	258
79	460	1.6	18.2	7.5	**300L2**	—	**BN112M4**	**M3LC4**	3270	3270	11600	13500	1870	246
79	460	3.0	18.2	7.5	**301L2**	—	**BN112M4**	**M3LC4**	3270	3270	11600	12700	1870	256
96	380	1.9	14.8	7.5	**300L2**	—	**BN112M4**	**M3LC4**	3050	3050	10900	12700	1740	246
97	370	1.4	14.8	12.0	—	**300R2**	**BN112M4**	**M3LC4**	3050	3050	10900	12600	1740	248
97	370	2.5	14.8	12.0	—	**301R2**	**BN112M4**	**M3LC4**	3050	3050	10900	11900	1740	258
118	310	2.3	12.1	7.5	**300L2**	—	**BN112M4**	**M3LC4**	2850	2850	10300	11900	1630	246
121	300	2.0	11.8	12.0	—	**300R2**	**BN112M4**	**M3LC4**	2830	2830	10200	11800	1620	248
159	240	1.4	9.00	7.5	**300L1**	—	**BN112M4**	**M3LC4**	2590	2590	9380	10900	1480	246
159	240	2.7	9.00	7.5	**301L1**	—	**BN112M4**	**M3LC4**	2590	2590	9380	10300	1480	256
164	220	2.8	8.74	12.0	—	**300R2**	**BN112M4**	**M3LC4**	2560	2560	9300	10800	1460	248
199	190	2.2	7.20	7.5	**300L1**	—	**BN112M4**	**M3LC4**	2400	2400	8770	10200	1370	246

P_1 = 5.5 kW

n_2 min^{-1}	M_{n2} Nm	f_S	i	P_t kW					Rn_2 [N] MC	MZ	HC/PC	HZ/PZ	FZ	
0.76	60300	2.5	1893	18.0	**317ML4**	—	**BN132S4**	—	—	—	411300	436900	150000	408
0.79	57900	1.0	1817	11.0	**313ML4**	—	**BN132S4**	—	—	—	184700	216500	80000	362
0.80	57300	1.1	1796	15.0	**314ML4**	—	**BN132S4**	—	—	—	171500	205600	90000	374
0.80	57500	1.4	1805	18.0	**315ML4**	—	**BN132S4**	—	—	—	171600	205800	90000	386
0.93	49500	2.5	1553	18.0	**316ML4**	—	**BN132S4**	—	—	—	257000	288300	150000	398
0.96	47900	1.2	1502	11.0	**313ML4**	—	**BN132S4**	—	—	—	179800	210700	80000	362
0.96	47600	1.7	1492	18.0	**315ML4**	—	**BN132S4**	—	—	—	167000	200200	90000	386
0.97	47300	1.3	1485	15.0	**314ML4**	—	**BN132S4**	—	—	—	166900	200100	90000	374
1.0	45100	0.9	1415	11.0	**311ML4**	—	**BN132S4**	—	—	—	123000	125500	64600	350
1.0	44400	1.1	1394	11.0	**313ML4**	—	**BN132S4**	—	—	—	177900	208400	79100	362
1.1	40300	1.4	1266	11.0	**313ML4**	—	**BN132S4**	—	—	—	175400	205600	76600	362
1.1	40700	1.8	1277	15.0	**314ML4**	—	**BN132S4**	—	—	—	163300	195800	86500	374
1.1	40900	2.2	1284	18.0	**315ML4**	—	**BN132S4**	—	—	—	163400	196000	86600	386

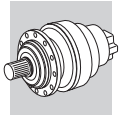

P_1 = 5.5 kW

n_2 min^{-1}	M_{n2} Nm	f_S	i	P_t kW					Rn_2 [N] MC	MZ	HC/PC	HZ/PZ	FZ	
1.1	41700	2.9	1308	18.0	**316ML4**	—	**BN132S4**	—	—	—	250800	281300	145300	398
1.2	39200	1.2	1230	11.0	**311ML4**	—	**BN132S4**	—	—	—	120600	123100	61700	350
1.2	39400	3.0	1237	18.0	**316ML4**	—	**BN132S4**	—	—	—	248800	279100	142600	398
1.3	35600	1.4	1117	11.0	**313ML4**	—	**BN132S4**	—	—	—	172300	201900	73500	362
1.3	35000	2.0	1099	15.0	**314ML4**	—	**BN132S4**	—	—	—	159800	191700	82200	374
1.3	35200	2.5	1104	18.0	**315ML4**	—	**BN132S4**	—	—	—	159900	191800	82400	386
1.4	33700	1.4	1058	11.0	**311ML4**	—	**BN132S4**	—	—	—	118000	120400	58700	350
1.4	32300	1.7	1014	11.0	**313ML4**	—	**BN132S4**	—	—	—	170000	199200	71200	362
1.4	33100	2.3	1038	15.0	**314ML4**	—	**BN132S4**	—	—	—	158500	190100	80700	374
1.4	33200	3.0	1043	18.0	**315ML4**	—	**BN132S4**	—	—	—	158600	190200	80800	386
1.5	31000	1.0	974	11.0	**310ML4**	—	**BN132S4**	—	—	—	92800	117700	57100	338
1.5	31400	1.4	986	11.0	**311ML4**	—	**BN132S4**	—	—	—	116800	119200	57300	350
1.5	29700	3.0	930	18.0	**315ML4**	—	**BN132S4**	—	—	—	156100	187200	77800	386
1.6	28300	1.9	889	11.0	**313ML4**	—	**BN132S4**	—	—	—	166800	195500	68100	362
1.6	29500	2.4	926	15.0	**314ML4**	—	**BN132S4**	—	—	—	156000	187000	77700	374
1.6	29000	2.5	909	40	—	**315MR4**	**BN132S4**	—	—	—	155600	186600	77200	388
1.7	26300	1.7	825	11.0	**311ML4**	—	**BN132S4**	—	—	—	113900	116200	54000	350
1.7	27300	2.7	858	15.0	**314ML4**	—	**BN132S4**	—	—	—	154300	185000	75700	374
1.8	25400	1.1	798	11.0	**310ML4**	—	**BN132S4**	—	—	—	90200	114400	53400	338
1.8	25200	2.0	790	11.0	**313ML4**	—	**BN132S4**	—	—	—	164000	192200	65500	362
1.9	24100	1.0	757	15.0	—	**310MR4**	**BN132S4**	—	—	—	89500	113500	52500	340
1.9	23800	1.4	746	22.0	—	**311MR4**	**BN132S4**	—	—	—	112300	114600	52200	352
1.9	24800	1.5	778	22.0	—	**313MR4**	**BN132S4**	—	—	—	163700	191800	65200	364
2.0	23000	0.9	722	7.5	**309L4**	—	**BN132S4**	—	—	—	78700	101300	28600	326
2.0	23100	1.2	726	11.0	**310ML4**	—	**BN132S4**	—	—	—	89000	112900	51700	338
2.1	22200	2.3	695	11.0	**313ML4**	—	**BN132S4**	—	—	—	161000	188700	62800	362
2.2	20600	2.4	647	22.0	—	**313MR4**	**BN132S4**	—	—	—	159400	186800	61300	364
2.3	20300	1.3	637	11.0	**310ML4**	—	**BN132S4**	—	—	—	87400	110800	49500	338
2.3	20400	1.0	639	15.0	—	**310MR4**	**BN132S4**	—	—	—	87400	110800	49600	340
2.3	20000	2.1	627	11.0	**311ML4**	—	**BN132S4**	—	—	—	109500	111700	49300	350
2.3	20000	2.1	629	22.0	—	**311MR4**	**BN132S4**	—	—	—	109600	111800	49300	352
2.3	20200	2.4	633	11.0	**313ML4**	—	**BN132S4**	—	—	—	158900	186200	60800	362
2.3	19600	2.8	614	22.0	—	**314MR4**	**BN132S4**	—	—	—	147100	176400	67700	376
2.4	18800	1.4	590	11.0	**310ML4**	—	**BN132S4**	—	—	—	86400	109600	48300	338
2.4	18800	1.0	590	15.0	—	**310MR4**	**BN132S4**	—	—	—	86400	109600	48300	340
2.5	18400	1.2	579	7.5	**309L4**	—	**BN132S4**	—	—	—	76200	98100	26600	326
2.5	18100	2.3	568	11.0	**311ML4**	—	**BN132S4**	—	—	—	108000	110200	47700	350
2.7	17000	2.8	535	22.0	—	**313MR4**	**BN132S4**	—	—	—	155100	181800	57500	364
2.8	16200	1.6	507	11.0	**310ML4**	—	**BN132S4**	—	—	—	84600	107200	45900	338
2.8	16500	1.5	517	15.0	—	**310MR4**	**BN132S4**	—	—	—	84800	107500	46200	340
2.8	16300	2.8	512	11.0	**311ML4**	—	**BN132S4**	—	—	—	106400	108600	46100	350
2.8	16600	2.4	520	22.0	—	**311MR4**	**BN132S4**	—	—	—	106600	108800	46300	352
2.8	16400	2.9	514	11.0	**313ML4**	—	**BN132S4**	—	—	—	154200	180700	56700	362
2.9	15600	2.1	490	22.0	—	**311MR4**	**BN132S4**	—	—	—	105700	107900	45400	352
3.1	14800	1.2	465	7.5	**309L4**	—	**BN132S4**	—	—	—	73900	95100	24700	326
3.2	14400	0.9	453	15.0	—	**307R4**	**BN132S4**	**M4SA4**	32000	40000	72000	94700	30600	316
3.2	14600	1.0	457	15.0	—	**309R4**	**BN132S4**	—	—	—	73700	94900	24600	328
3.2	14400	2.0	453	11.0	**310ML4**	—	**BN132S4**	—	—	—	83200	105500	44200	338
3.2	14500	1.3	454	15.0	—	**310MR4**	**BN132S4**	—	—	—	83200	105500	44200	340
3.3	14000	2.8	438	22.0	—	**311MR4**	**BN132S4**	—	—	—	104000	106200	43700	352
3.5	13200	0.9	413	15.0	—	**307R4**	**BN132S4**	**M4SA4**	31600	39500	71100	93500	29700	316
3.5	13200	1.4	413	15.0	—	**309R4**	**BN132S4**	—	—	—	72700	93500	23700	328
3.5	13200	3.0	413	22.0	—	**311MR4**	**BN132S4**	—	—	—	103200	105300	42900	352
3.6	12900	0.9	406	7.5	**307L4**	—	**BN132S4**	**M4SA4**	31500	39400	70900	93200	29500	314
3.6	12900	1.4	406	7.5	**309L4**	—	**BN132S4**	—	—	—	72500	93200	23600	326
3.7	12500	1.5	392	11.0	**310ML4**	—	**BN132S4**	—	—	—	81500	103300	42100	338
3.8	11900	1.2	374	15.0	—	**309R4**	**BN132S4**	—	—	—	71600	92200	23000	328
3.8	12200	2.0	383	15.0	—	**310MR4**	**BN132S4**	—	—	—	81200	103000	41800	340
4.0	11600	1.1	363	15.0	—	**307R4**	**BN132S4**	**M4SA4**	31000	38800	69800	91800	28400	316
4.1	11100	1.3	349	7.5	**307L4**	—	**BN132S4**	**M4SA4**	30800	38500	69400	91300	28100	314
4.1	11100	1.9	349	7.5	**309L4**	—	**BN132S4**	—	—	—	70900	91300	22400	326
4.1	11500	1.6	350	18.0	**310ML3**	—	**BN132S4**	—	—	—	80200	101700	40600	338
4.2	11000	2.7	347	15.0	—	**310MR4**	**BN132S4**	—	—	—	80100	101600	40400	340
4.3	10600	1.1	331	15.0	—	**307R4**	**BN132S4**	**M4SA4**	30600	38300	68900	90600	27600	316
4.3	11100	1.2	336	11.0	**309L3**	—	**BN132S4**	—	—	—	70600	90800	22200	326

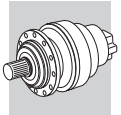

A

P_1 = 5.5 kW

n_2 min^{-1}	M_{n2} Nm	f_S	i	P_t kW					Rn_2 [N] MC	MZ	HC/PC	HZ/PZ	FZ	
4.3	10600	1.6	331	15.0	—	**309R4**	**BN132S4**	—	—	—	70400	90600	22100	328
4.7	9720	2.4	305	15.0	—	**310MR4**	**BN132S4**	—	—	—	78600	99700	38700	340
4.8	9560	1.5	300	15.0	—	**307R4**	**BN132S4**	**M4SA4**	30200	37700	67900	89300	26700	316
4.9	9700	2.3	295	18.0	**310ML3**	—	**BN132S4**	—	—	—	78300	99300	38300	338
4.9	9570	2.9	291	18.0	**311ML3**	—	**BN132S4**	—	—	—	98200	100200	38200	350
5.0	9210	0.9	289	12.0	—	**306R4**	**BN132S4**	**M4SA4**	25000	28500	57000	65800	20500	304
5.1	9310	1.2	284	11.0	**307L3**	—	**BN132S4**	**M4SA4**	30000	37500	67500	88800	26200	314
5.1	9070	1.2	284	15.0	—	**307R4**	**BN132S4**	**M4SA4**	30000	37500	67500	88800	26200	316
5.1	9310	1.7	284	11.0	**309L3**	—	**BN132S4**	—	—	—	69000	88800	20900	326
5.1	9070	1.9	284	15.0	—	**309R4**	**BN132S4**	—	—	—	69000	88800	21000	328
5.6	8220	1.8	258	15.0	—	**307R4**	**BN132S4**	**M4SA4**	30000	37500	67500	88800	25400	316
5.6	8220	2.1	258	15.0	—	**309R4**	**BN132S4**	—	—	—	69000	88800	20300	328
5.6	8230	2.7	258	15.0	—	**310MR4**	**BN132S4**	—	—	—	78000	98900	36700	340
5.8	7920	1.0	249	12.0	—	**306R4**	**BN132S4**	**M4SA4**	25000	28500	57000	65800	19500	304
5.8	8190	2.2	249	18.0	**310ML3**	—	**BN132S4**	—	—	—	78000	98900	36200	338
6.0	7820	1.0	238	7.5	**306L3**	—	**BN132S4**	**M4SA4**	25000	28500	57000	65800	19200	302
6.0	7860	1.1	239	11.0	**307L3**	—	**BN132S4**	**M4SA4**	30000	37500	67500	88800	24700	314
6.0	7860	1.7	239	11.0	**309L3**	—	**BN132S4**	—	—	—	69000	88800	19800	326
6.2	7400	1.5	232	15.0	—	**307R4**	**BN132S4**	**M4SA4**	30000	37500	67500	88800	24500	316
6.2	7400	2.3	232	15.0	—	**309R4**	**BN132S4**	—	—	—	69000	88800	19600	328
6.3	7340	1.0	230	12.0	—	**306R4**	**BN132S4**	**M4SA4**	25000	28500	57000	65800	19000	304
6.3	7560	2.6	230	18.0	**310ML3**	—	**BN132S4**	—	—	—	78000	98900	35300	338
6.5	7260	1.8	221	11.0	**307L3**	—	**BN132S4**	**M4SA4**	30000	37500	67500	88800	24100	314
6.5	7320	1.8	223	11.0	**309L3**	—	**BN132S4**	—	—	—	69000	88800	19300	326
6.7	6810	1.4	214	12.0	—	**306R4**	**BN132S4**	**M4SA4**	25000	28500	57000	65800	18500	304
7.0	6730	1.2	205	7.5	**306L3**	—	**BN132S4**	**M4SA4**	25000	28500	57000	65800	18300	302
7.0	6550	2.2	206	15.0	—	**307R4**	**BN132S4**	**M4SA4**	30000	37500	67500	88800	23500	316
7.1	6620	1.7	202	11.0	**307L3**	—	**BN132S4**	**M4SA4**	30000	37500	67500	88800	23400	314
7.1	6620	2.5	202	11.0	**309L3**	—	**BN132S4**	—	—	—	69000	88800	18700	326
7.6	6230	1.0	190	7.5	**306L3**	—	**BN132S4**	**M4SA4**	25000	28500	57000	65800	17800	302
7.6	6080	2.3	191	15.0	—	**307R4**	**BN132S4**	**M4SA4**	30000	37500	67500	88800	22900	316
7.6	6080	2.8	191	15.0	—	**309R4**	**BN132S4**	—	—	—	69000	88800	18300	328
7.9	6000	2.4	183	11.0	**309L3**	—	**BN132S4**	—	—	—	69000	88800	18100	326
8.0	5770	1.6	181	12.0	—	**306R4**	**BN132S4**	**M4SA4**	25000	28500	57000	65800	17500	304
8.1	5820	2.1	177	11.0	**307L3**	—	**BN132S4**	**M4SA4**	30000	37500	67500	88800	22400	314
8.6	5350	1.4	168	12.0	—	**306R4**	**BN132S4**	**M4SA4**	25000	28500	57000	65800	17100	304
8.7	5260	2.1	165	15.0	—	**307R4**	**BN132S4**	**M4SA4**	30000	37500	67500	88800	21900	316
8.9	5310	2.0	162	11.0	**307L3**	—	**BN132S4**	**M4SA4**	30000	37500	67500	88800	21700	314
9.1	5050	1.1	158	12.0	—	**305R4**	**BN132S4**	—	21000	24000	40500	48000	11500	292
9.1	5030	1.9	158	12.0	—	**306R4**	**BN132S4**	**M4SA4**	25000	28500	57000	65800	16800	304
9.5	4990	1.5	152	7.5	**306L3**	—	**BN132S4**	**M4SA4**	25000	28500	57000	65800	16500	302
9.5	4840	2.8	152	15.0	—	**307R4**	**BN132S4**	**M4SA4**	30000	37500	67500	88800	21300	316
9.7	4720	1.0	148	12.0	—	**305R4**	**BN132S4**	—	21000	24000	40500	48000	11200	292
9.8	4810	2.8	146	11.0	**307L3**	—	**BN132S4**	**M4SA4**	30000	37500	67500	88800	21000	314
10.0	4740	1.2	144	14.0	—	**306R3**	**BN132S4**	**M4SA4**	25000	28500	57000	65800	16300	304
10.2	4650	1.1	141	7.5	**305L3**	—	**BN132S4**	**M4SA4**	20900	23900	40300	47700	11100	290
10.2	4630	1.7	141	7.5	**306L3**	—	**BN132S4**	**M4SA4**	24800	28300	56600	65400	16100	302
10.4	4560	2.4	139	11.0	**307L3**	—	**BN132S4**	**M4SA4**	29600	37000	66800	87800	20600	314
11.1	4120	1.3	129	12.0	—	**305R4**	**BN132S4**	—	20300	23200	39200	46500	10700	292
11.9	3980	2.0	121	7.5	**306L3**	—	**BN132S4**	**M4SA4**	23600	26900	54100	62500	15300	302
12.0	3930	2.2	120	22.0	—	**307R3**	**BN132S4**	**M4SA4**	28200	35300	63900	84000	19600	316
12.1	3920	1.7	119	14.0	—	**306R3**	**BN132S4**	**M4SA4**	23500	26800	53900	62200	15300	304
12.6	3760	1.0	114	14.0	—	**305R3**	**BN132S4**	—	19400	22200	37800	44800	10300	292
12.7	3720	2.8	113	11.0	**307L3**	—	**BN132S4**	**M4SA4**	27700	34600	62800	82600	19300	314
12.8	3700	1.0	113	7.5	**305L3**	—	**BN132S4**	**M4SA4**	19400	22100	37600	44600	10300	290
12.8	3690	2.0	112	7.5	**306L3**	—	**BN132S4**	**M4SA4**	23000	26200	52900	61100	15000	302
13.0	3630	0.9	111	7.5	**304L3**	—	**BN132S4**	**M4SA4**	19200	22000	37400	44300	10200	278
13.2	3490	1.0	109	12.0	—	**304R4**	**BN132S4**	—	19200	21900	37300	44200	10200	280
13.8	3430	1.0	105	7.5	**304L3**	—	**BN132S4**	**M4SA4**	18900	21600	36800	43600	10000	278
13.8	3430	1.5	105	7.5	**305L3**	—	**BN132S4**	**M4SA4**	18900	21600	36800	43600	10000	290
13.8	3420	2.6	104	7.5	**306L3**	—	**BN132S4**	**M4SA4**	22400	25600	51700	59700	14600	302
14.5	3250	2.6	99	22.0	—	**307R3**	**BN132S4**	**M4SA4**	26500	33100	60300	79400	18400	316
14.6	3240	2.0	98.5	14.0	—	**306R3**	**BN132S4**	**M4SA4**	22000	25100	50900	58700	14300	304
15.7	3010	1.2	91.5	14.0	—	**305R3**	**BN132S4**	—	18100	20600	35400	41900	9580	292
16.0	2960	1.1	90.2	7.5	**304L3**	—	**BN132S4**	**M4SA4**	18000	20500	35200	41700	9530	278

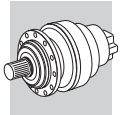

P_1 = 5.5 kW

n_2 min^{-1}	M_{n2} Nm	f_S	i	P_t kW					Rn_2 [N] MC	MZ	HC/PC	HZ/PZ	FZ	
16.0	2960	1.4	90.2	7.5	**305L3**	**—**	**BN132S4**	**M4SA4**	18000	20500	35200	41700	9530	290
16.1	2850	1.2	89.4	12.0	**—**	**304R4**	**BN132S4**	**—**	17900	20500	35100	41600	9500	280
16.3	2900	3.0	88.3	7.5	**306L3**	**—**	**BN132S4**	**M4SA4**	21200	24200	49200	56800	13800	302
17.0	2780	2.7	84.7	14.0	**—**	**306R3**	**BN132S4**	**M4SA4**	20900	23900	48600	56100	13600	304
17.6	2690	2.6	81.9	7.5	**306L3**	**—**	**BN132S4**	**M4SA4**	20700	23600	48100	55500	13500	302
18.3	2590	1.1	78.7	14.0	**—**	**304R3**	**BN132S4**	**—**	17200	19600	33800	40000	9110	280
18.3	2590	1.7	78.7	14.0	**—**	**305R3**	**BN132S4**	**—**	17200	19600	33800	40000	9110	292
18.6	2540	1.0	77.2	7.5	**303L3**	**—**	**BN132S4**	**M4SA4**	17100	19500	33600	39800	9050	266
18.6	2540	1.4	77.2	7.5	**304L3**	**—**	**BN132S4**	**M4SA4**	17100	19500	33600	39800	9050	278
18.6	2540	1.9	77.2	7.5	**305L3**	**—**	**BN132S4**	**M4SA4**	17100	19500	33600	39800	9050	290
19.6	2410	1.5	73.3	14.0	**—**	**305R3**	**BN132S4**	**—**	16800	19200	33100	39200	8900	292
19.9	2370	0.9	72.3	7.5	**303L3**	**—**	**BN132S4**	**M4SA4**	16700	19100	32900	39000	8850	266
19.9	2370	1.4	72.3	7.5	**304L3**	**—**	**BN132S4**	**M4SA4**	16700	19100	32900	39000	8850	278
19.9	2370	1.8	72.3	7.5	**305L3**	**—**	**BN132S4**	**M4SA4**	16700	19100	32900	39000	8850	290
19.9	2460	2.2	72.5	13.0	**306L2**	**—**	**BN132S4**	**M4SA4**	19900	22700	46400	53600	12900	302
22.8	2070	1.2	63.1	7.5	**303L3**	**—**	**BN132S4**	**M4SA4**	15900	18200	31600	37500	8460	266
22.8	2070	1.0	63.1	14.0	**—**	**303R3**	**BN132S4**	**—**	15900	18200	31600	37500	8460	268
22.8	2070	1.7	63.1	7.5	**304L3**	**—**	**BN132S4**	**M4SA4**	15900	18200	31600	37500	8460	278
22.8	2070	1.4	63.1	14.0	**—**	**304R3**	**BN132S4**	**—**	15900	18200	31600	37500	8460	280
22.8	2070	2.3	63.1	7.5	**305L3**	**—**	**BN132S4**	**M4SA4**	15900	18200	31600	37500	8460	290
22.8	2070	2.1	63.1	14.0	**—**	**305R3**	**BN132S4**	**—**	15900	18200	31600	37500	8460	292
24.3	2000	1.2	59.1	9.0	**304L2**	**—**	**BN132S4**	**M4SA4**	15600	17800	31000	36800	8280	278
25.6	1910	2.7	56.3	13.0	**306L2**	**—**	**BN132S4**	**M4SA4**	18300	20800	43000	49600	11900	302
25.8	1890	1.0	55.8	9.0	**303L2**	**—**	**BN132S4**	**M4SA4**	15300	17500	30500	36100	8120	266
25.8	1890	1.9	55.8	9.0	**305L2**	**—**	**BN132S4**	**M4SA4**	15300	17500	30500	36100	8120	290
26.6	1780	1.0	54.2	14.0	**—**	**303R3**	**BN132S4**	**—**	15200	17300	30200	35800	8040	268
26.6	1780	2.0	54.2	14.0	**—**	**305R3**	**BN132S4**	**—**	15200	17300	30200	35800	8040	292
27.0	1750	1.2	53.4	7.5	**303L3**	**—**	**BN132S4**	**M4SA4**	15100	17200	30100	35600	8000	266
27.0	1750	1.8	53.4	7.5	**304L3**	**—**	**BN132S4**	**M4SA4**	15100	17200	30100	35600	8000	278
27.0	1750	2.3	53.4	7.5	**305L3**	**—**	**BN132S4**	**M4SA4**	15100	17200	30100	35600	8000	290
27.9	1700	1.0	51.6	7.5	**301L3**	**—**	**BN132S4**	**M4SA4**	4620	4620	15800	17300	2640	256
28.6	1660	1.0	50.4	12.0	**—**	**301R3**	**BN132S4**	**—**	4580	4580	15700	17200	2620	258
28.6	1650	1.4	50.3	14.0	**—**	**303R3**	**BN132S4**	**—**	14800	16900	29500	35000	7840	268
28.6	1650	2.1	50.3	14.0	**—**	**304R3**	**BN132S4**	**—**	14800	16900	29500	35000	7840	280
28.6	1650	2.7	50.3	14.0	**—**	**305R3**	**BN132S4**	**—**	14800	16900	29500	35000	7840	292
30.0	1600	1.5	47.3	9.0	**304L2**	**—**	**BN132S4**	**M4SA4**	14500	16600	29000	34400	7690	278
31	1530	1.4	46.6	14.0	**—**	**303R3**	**BN132S4**	**—**	14400	16500	28900	34200	7650	268
31	1530	1.9	46.6	14.0	**—**	**304R3**	**BN132S4**	**—**	14400	16500	28900	34200	7650	280
31	1530	2.8	46.6	14.0	**—**	**305R3**	**BN132S4**	**—**	14400	16500	28900	34200	7650	292
32	1510	1.2	44.6	9.0	**303L2**	**—**	**BN132S4**	**M4SA4**	14200	16200	28500	33800	7540	266
32	1510	2.4	44.6	9.0	**305L2**	**—**	**BN132S4**	**M4SA4**	14200	16200	28500	33800	7540	290
33	1430	2.2	43.6	7.5	**304L3**	**—**	**BN132S4**	**M4SA4**	14100	16100	28300	33500	7480	278
34	1400	1.5	42.6	14.0	**—**	**303R3**	**BN132S4**	**—**	14000	16000	28100	33300	7420	268
34	1400	2.3	42.6	14.0	**—**	**304R3**	**BN132S4**	**—**	14000	16000	28100	33300	7420	280
34	1400	2.7	42.6	14.0	**—**	**305R3**	**BN132S4**	**—**	14000	16000	28100	33300	7420	292
35	1410	0.9	41.5	7.5	**301L2**	**—**	**BN132S4**	**M4SA4**	4290	4290	14800	16200	2450	256
35	1350	1.0	41.2	12.0	**—**	**301R3**	**BN132S4**	**—**	4280	4280	14800	16100	2450	258
38	1300	1.2	38.4	7.5	**301L2**	**—**	**BN132S4**	**M4SA4**	4180	4180	14500	15800	2390	256
38	1300	1.7	38.4	9.0	**303L2**	**—**	**BN132S4**	**M4SA4**	13500	15400	27200	32300	7170	266
38	1300	2.2	38.4	9.0	**304L2**	**—**	**BN132S4**	**M4SA4**	13500	15400	27200	32300	7170	278
39	1220	1.3	37.3	12.0	**—**	**301R3**	**BN132S4**	**—**	4140	4140	14300	15700	2370	258
39	1220	2.0	37.1	14.0	**—**	**303R3**	**BN132S4**	**—**	13400	15300	27000	32000	7090	268
39	1220	2.8	37.1	14.0	**—**	**304R3**	**BN132S4**	**—**	13400	15300	27000	32000	7090	280
40	1210	1.5	35.8	9.0	**303L2**	**—**	**BN132S4**	**M4SA4**	13200	15100	26700	31600	7000	266
40	1210	2.9	35.8	9.0	**305L2**	**—**	**BN132S4**	**M4SA4**	13200	15100	26700	31600	7000	290
43	1130	1.2	33.3	7.5	**301L2**	**—**	**BN132S4**	**M4SA4**	3990	3990	13900	15100	2280	256
46	1030	2.0	31.5	14.0	**—**	**303R3**	**BN132S4**	**—**	12600	14500	25700	30400	6710	268
46	1030	3.0	31.5	14.0	**—**	**304R3**	**BN132S4**	**—**	12600	14500	25700	30400	6710	280
47	1040	1.5	30.7	7.5	**301L2**	**—**	**BN132S4**	**M4SA4**	3880	3880	13500	14800	2220	256
47	1000	1.6	30.4	12.0	**—**	**301R3**	**BN132S4**	**—**	3870	3870	13500	14700	2210	258
47	1040	2.1	30.8	9.0	**303L2**	**—**	**BN132S4**	**M4SA4**	12600	14300	25500	30200	6660	266
47	1040	2.7	30.8	9.0	**304L2**	**—**	**BN132S4**	**M4SA4**	12600	14300	25500	30200	6660	278
54	900	2.0	26.4	9.0	**303L2**	**—**	**BN132S4**	**M4SA4**	11900	13600	24400	28900	6330	266
56	840	2.4	25.7	14.0	**—**	**303R3**	**BN132S4**	**—**	11800	13500	24100	28600	6270	268
58	820	1.7	24.8	12.0	**—**	**301R3**	**BN132S4**	**—**	3620	3620	12700	13900	2070	258

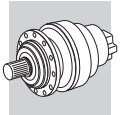

A

P_1 = 5.5 kW

n_2 min^{-1}	M_{n2} Nm	f_S	i	P_t kW					Rn_2 [N] MC	MZ	HC/PC	HZ/PZ	FZ	
58	840	1.0	24.8	18.0	—	**303R2**	**BN132S4**	**M4SA4**	11700	13300	23900	28300	6200	268
59	830	1.0	24.6	7.5	**300L2**	—	**BN132S4**	**M4SA4**	3610	3610	12700	14700	2060	246
59	830	1.8	24.6	7.5	**301L2**	—	**BN132S4**	**M4SA4**	3610	3610	12700	13800	2060	256
59	830	2.6	24.5	9.0	**303L2**	—	**BN132S4**	**M4SA4**	11600	13300	23800	28200	6170	266
63	770	2.7	22.7	9.0	**303L2**	—	**BN132S4**	**M4SA4**	11400	13000	23300	27600	6020	266
69	700	2.6	20.8	9.0	**303L2**	—	**BN132S4**	**M4SA4**	11000	12600	22700	26900	5840	266
72	680	0.9	20.1	7.5	**300L2**	—	**BN132S4**	**M4SA4**	3370	3370	11900	13800	1930	246
72	680	1.9	20.1	7.5	**301L2**	—	**BN132S4**	**M4SA4**	3370	3370	11900	13000	1930	256
75	650	2.4	19.2	18.0	—	**303R2**	**BN132S4**	**M4SA4**	10700	12300	22100	26200	5690	268
78	620	1.2	18.5	12.0	—	**301R2**	**BN132S4**	**M4SA4**	3280	3280	11600	12700	1870	258
79	620	1.2	18.2	7.5	**300L2**	—	**BN132S4**	**M4SA4**	3260	3260	11600	13400	1860	246
79	620	2.2	18.2	7.5	**301L2**	—	**BN132S4**	**M4SA4**	3260	3260	11600	12600	1860	256
97	500	1.4	14.8	7.5	**300L2**	—	**BN132S4**	**M4SA4**	3050	3050	10900	12600	1740	246
97	500	2.6	14.8	7.5	**301L2**	—	**BN132S4**	**M4SA4**	3050	3050	10900	11900	1740	256
98	500	1.0	14.8	12.0	—	**300R2**	**BN132S4**	**M4SA4**	3040	3040	10900	12600	1740	248
98	500	1.9	14.8	12.0	—	**301R2**	**BN132S4**	**M4SA4**	3040	3040	10900	11900	1740	258
119	410	1.7	12.1	7.5	**300L2**	—	**BN132S4**	**M4SA4**	2850	2850	10200	11900	1630	246
122	400	1.5	11.8	12.0	—	**300R2**	**BN132S4**	**M4SA4**	2830	2830	10200	11800	1610	248
122	400	2.9	11.8	12.0	—	**301R2**	**BN132S4**	**M4SA4**	2830	2830	10200	11100	1610	258
149	340	2.3	9.67	11.0	**303L1**	—	**BN132S4**	**M4SA4**	8530	9750	18000	21300	4530	266
160	310	1.0	9.00	7.5	**300L1**	—	**BN132S4**	**M4SA4**	2580	2580	9360	10900	1470	246
160	310	2.0	9.00	7.5	**301L1**	—	**BN132S4**	**M4SA4**	2580	2580	9360	10200	1470	256
165	300	2.1	8.74	12.0	—	**300R2**	**BN132S4**	**M4SA4**	2550	2550	9280	10800	1460	248
200	250	1.6	7.20	7.5	**300L1**	—	**BN132S4**	**M4SA4**	2390	2390	8750	10200	1370	246
202	240	2.4	7.13	12.0	—	**300R2**	**BN132S4**	**M4SA4**	2390	2390	8730	10100	1360	248
250	200	2.4	5.77	7.5	**300L1**	—	**BN132S4**	**M4SA4**	2220	2220	8190	9520	1270	246

P_1 = 7.5 kW

n_2 min^{-1}	M_{n2} Nm	f_S	i	P_t kW					Rn_2 [N] MC	MZ	HC/PC	HZ/PZ	FZ	
0.76	83800	1.8	1893	18.0	**317ML4**	—	**BN132MA4**	—	—	—	411300	436900	150000	408
0.80	79900	1.0	1805	18.0	**315ML4**	—	**BN132MA4**	—	—	—	171600	205800	90000	386
0.90	70600	2.2	1595	18.0	**317ML4**	—	**BN132MA4**	—	—	—	401400	426400	150000	408
0.93	68700	1.8	1553	18.0	**316ML4**	—	**BN132MA4**	—	—	—	257000	288300	150000	398
0.96	66100	1.2	1492	18.0	**315ML4**	—	**BN132MA4**	—	—	—	167000	200200	90000	386
0.97	65700	1.0	1485	15.0	**314ML4**	—	**BN132MA4**	—	—	—	166900	200100	90000	374
1.1	56000	1.0	1266	11.0	**313ML4**	—	**BN132MA4**	—	—	—	175400	205600	76600	362
1.1	56500	1.3	1277	15.0	**314ML4**	—	**BN132MA4**	—	—	—	163300	195800	86500	374
1.1	56800	1.6	1284	18.0	**315ML4**	—	**BN132MA4**	—	—	—	163400	196000	86600	386
1.1	57900	2.1	1308	18.0	**316ML4**	—	**BN132MA4**	—	—	—	250800	281300	145300	398
1.1	58400	2.7	1318	18.0	**317ML4**	—	**BN132MA4**	—	—	—	390600	414900	145600	408
1.2	54800	2.1	1237	18.0	**316ML4**	—	**BN132MA4**	—	—	—	248800	279100	142600	398
1.3	49400	1.0	1117	11.0	**313ML4**	—	**BN132MA4**	—	—	—	172300	201900	73500	362
1.3	48600	1.5	1099	15.0	**314ML4**	—	**BN132MA4**	—	—	—	159800	191700	82200	374
1.3	48900	1.8	1104	18.0	**315ML4**	—	**BN132MA4**	—	—	—	159900	191800	82400	386
1.3	48900	2.4	1104	18.0	**316ML4**	—	**BN132MA4**	—	—	—	244800	274600	137300	398
1.4	46800	1.0	1058	11.0	**311ML4**	—	**BN132MA4**	—	—	—	118000	120400	58700	350
1.4	44900	1.2	1014	11.0	**313ML4**	—	**BN132MA4**	—	—	—	170000	199200	71200	362
1.4	45900	1.7	1038	15.0	**314ML4**	—	**BN132MA4**	—	—	—	158500	190100	80700	374
1.4	46200	2.1	1043	18.0	**315ML4**	—	**BN132MA4**	—	—	—	158600	190200	80800	386
1.4	45100	2.6	1020	18.0	**316ML4**	—	**BN132MA4**	—	—	—	242000	271500	133700	398
1.5	43600	1.0	986	11.0	**311ML4**	—	**BN132MA4**	—	—	—	116800	119200	57300	350
1.5	41200	2.1	930	18.0	**315ML4**	—	**BN132MA4**	—	—	—	156100	187200	77800	386
1.6	39400	1.3	889	11.0	**313ML4**	—	**BN132MA4**	—	—	—	166800	195500	68100	362
1.6	41000	1.7	926	15.0	**314ML4**	—	**BN132MA4**	—	—	—	156000	187000	77700	374
1.6	40300	1.8	909	40	—	**315MR4**	**BN132MA4**	—	—	—	155600	186600	77200	388
1.6	39000	3.0	880	18.0	**316ML4**	—	**BN132MA4**	—	—	—	236900	265800	127300	398
1.7	36500	1.2	825	11.0	**311ML4**	—	**BN132MA4**	—	—	—	113900	116200	54000	350
1.7	38000	2.0	858	15.0	**314ML4**	—	**BN132MA4**	—	—	—	154300	185000	75700	374
1.7	38200	2.5	862	18.0	**315ML4**	—	**BN132MA4**	—	—	—	154400	185100	75800	386
1.8	35000	1.4	790	11.0	**313ML4**	—	**BN132MA4**	—	—	—	164000	192200	65500	362

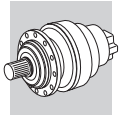

P_1 = 7.5 kW

n_2 min^{-1}	M_{n2} Nm	f_S	i	P_t kW					Rn_2 [N] MC	MZ	HC/PC	HZ/PZ	FZ	
1.8	34600	2.5	782	40	—	**315MR4**	**BN132MA4**	—	—	—	152300	182600	73400	388
1.9	33000	1.0	746	22.0	—	**311MR4**	**BN132MA4**	—	—	—	112300	114600	52200	352
1.9	34500	1.0	778	22.0	—	**313MR4**	**BN132MA4**	—	—	—	163700	191800	65200	364
1.9	32800	2.9	741	18.0	**315ML4**	—	**BN132MA4**	—	—	—	151100	181200	72100	386
2.0	32700	2.3	738	15.0	**314ML4**	—	**BN132MA4**	—	—	—	151000	181100	72000	374
2.1	30800	1.6	695	11.0	**313ML4**	—	**BN132MA4**	—	—	—	161000	188700	62800	362
2.2	28600	1.7	647	22.0	—	**313MR4**	**BN132MA4**	—	—	—	159400	186800	61300	364
2.2	29600	2.6	668	15.0	**314ML4**	—	**BN132MA4**	—	—	—	148900	178500	69700	374
2.2	29200	2.9	659	40	—	**315MR4**	**BN132MA4**	—	—	—	148600	178200	69400	388
2.3	28200	0.9	637	11.0	**310ML4**	—	**BN132MA4**	—	—	—	87400	110800	49500	338
2.3	27700	1.5	627	11.0	**311ML4**	—	**BN132MA4**	—	—	—	109500	111700	49300	350
2.3	27800	1.5	629	22.0	—	**311MR4**	**BN132MA4**	—	—	—	109600	111800	49300	352
2.3	28000	1.7	633	11.0	**313ML4**	—	**BN132MA4**	—	—	—	158900	186200	60800	362
2.3	27200	2.0	614	22.0	—	**314MR4**	**BN132MA4**	—	—	—	147100	176400	67700	376
2.4	26100	1.0	590	11.0	**310ML4**	—	**BN132MA4**	—	—	—	86400	109600	48300	338
2.4	26000	2.8	588	15.0	**314ML4**	—	**BN132MA4**	—	—	—	146200	175300	66800	374
2.5	25100	1.6	568	11.0	**311ML4**	—	**BN132MA4**	—	—	—	108000	110200	47700	350
2.5	25400	2.7	575	15.0	**314ML4**	—	**BN132MA4**	—	—	—	145700	174700	66300	374
2.6	25000	2.2	564	11.0	**313ML4**	—	**BN132MA4**	—	—	—	156300	183200	58500	362
2.7	23700	2.0	535	22.0	—	**313MR4**	**BN132MA4**	—	—	—	155100	181800	57500	364
2.7	23400	2.8	528	22.0	—	**314MR4**	**BN132MA4**	—	—	—	143900	172600	64400	376
2.8	22500	1.1	507	11.0	**310ML4**	—	**BN132MA4**	—	—	—	84600	107200	45900	338
2.8	22900	1.1	517	15.0	—	**310MR4**	**BN132MA4**	—	—	—	84800	107500	46200	340
2.8	22700	2.0	512	11.0	**311ML4**	—	**BN132MA4**	—	—	—	106400	108600	46100	350
2.8	23000	1.8	520	22.0	—	**311MR4**	**BN132MA4**	—	—	—	106600	108800	46300	352
2.8	22700	2.1	514	11.0	**313ML4**	—	**BN132MA4**	—	—	—	154200	180700	56700	362
2.9	21700	1.5	490	22.0	—	**311MR4**	**BN132MA4**	—	—	—	105700	107900	45400	352
2.9	22000	2.2	496	22.0	—	**313MR4**	**BN132MA4**	—	—	—	153500	179800	56100	364
3.2	20100	1.4	453	11.0	**310ML4**	—	**BN132MA4**	—	—	—	83200	105500	44200	338
3.2	20100	1.0	454	15.0	—	**310MR4**	**BN132MA4**	—	—	—	83200	105500	44200	340
3.2	20000	2.8	452	11.0	**313ML4**	—	**BN132MA4**	—	—	—	151400	177500	54400	362
3.2	19900	2.3	450	22.0	—	**313MR4**	**BN132MA4**	—	—	—	151400	177400	54300	364
3.3	19400	2.0	438	22.0	—	**311MR4**	**BN132MA4**	—	—	—	104000	106200	43700	352
3.5	18300	1.0	413	15.0	—	**309R4**	**BN132MA4**	—	—	—	72700	93500	23700	328
3.5	18200	2.5	410	11.0	**311ML4**	—	**BN132MA4**	—	—	—	103100	105200	42800	350
3.5	18300	2.1	413	22.0	—	**311MR4**	**BN132MA4**	—	—	—	103200	105300	42900	352
3.6	18000	1.0	406	7.5	**309L4**	—	**BN132MA4**	—	—	—	72500	93200	23600	326
3.7	17300	1.1	392	11.0	**310ML4**	—	**BN132MA4**	—	—	—	81500	103300	42100	338
3.7	17200	2.6	387	22.0	—	**313MR4**	**BN132MA4**	—	—	—	148100	173600	51600	364
3.8	16900	1.4	383	15.0	—	**310MR4**	**BN132MA4**	—	—	—	81200	103000	41800	340
4.1	15500	1.0	349	7.5	**307L4**	—	**BN132MA4**	**M4LA4**	30800	38500	69400	91300	28100	314
4.1	15500	1.4	349	7.5	**309L4**	—	**BN132MA4**	—	—	—	70900	91300	22400	326
4.1	16000	1.2	350	18.0	**310ML3**	—	**BN132MA4**	—	—	—	80200	101700	40600	338
4.1	15400	3.0	348	11.0	**311ML4**	—	**BN132MA4**	—	—	—	100700	102700	40500	350
4.2	15300	1.9	347	15.0	—	**310MR4**	**BN132MA4**	—	—	—	80100	101600	40400	340
4.2	15100	2.5	341	22.0	—	**311MR4**	**BN132MA4**	—	—	—	100400	102500	40200	352
4.3	14700	1.2	331	15.0	—	**309R4**	**BN132MA4**	—	—	—	70400	90600	22100	328
4.7	13500	1.7	305	15.0	—	**310MR4**	**BN132MA4**	—	—	—	78600	99700	38700	340
4.7	13900	2.2	304	18.0	**313ML3**	—	**BN132MA4**	—	—	—	143100	167700	47600	362
4.8	13300	1.1	300	15.0	—	**307R4**	**BN132MA4**	**M4LA4**	30200	37700	67900	89300	26700	316
4.9	13500	1.7	295	18.0	**310ML3**	—	**BN132MA4**	—	—	—	78300	99300	38300	338
4.9	13300	2.1	291	18.0	**311ML3**	—	**BN132MA4**	—	—	—	98200	100200	38200	350
4.9	13000	2.8	294	22.0	—	**311MR4**	**BN132MA4**	—	—	—	98300	100300	38300	352
5.1	12900	1.2	284	11.0	**309L3**	—	**BN132MA4**	—	—	—	69000	88800	20900	326
5.1	12600	1.3	284	15.0	—	**309R4**	**BN132MA4**	—	—	—	69000	88800	21000	328
5.2	12200	2.3	276	15.0	—	**310MR4**	**BN132MA4**	—	—	—	78000	98900	37500	340
5.6	11400	1.3	258	15.0	—	**307R4**	**BN132MA4**	**M4LA4**	30000	37500	67500	88800	25400	316
5.6	11400	1.5	258	15.0	—	**309R4**	**BN132MA4**	—	—	—	69000	88800	20300	328
5.6	11400	2.0	258	15.0	—	**310MR4**	**BN132MA4**	—	—	—	78000	98900	36700	340
5.8	11400	1.6	249	18.0	**310ML3**	—	**BN132MA4**	—	—	—	78000	98900	36200	338
6.0	10900	1.2	239	11.0	**309L3**	—	**BN132MA4**	—	—	—	69000	88800	19800	326
6.1	10500	2.7	238	15.0	—	**310MR4**	**BN132MA4**	—	—	—	78000	98900	35700	340
6.2	10300	1.1	232	15.0	—	**307R4**	**BN132MA4**	**M4LA4**	30000	37500	67500	88800	24500	316
6.2	10300	1.6	232	15.0	—	**309R4**	**BN132MA4**	—	—	—	69000	88800	19600	328
6.3	10500	1.8	230	18.0	**310ML3**	—	**BN132MA4**	—	—	—	78000	98900	35300	338

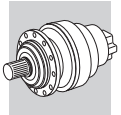

A

P_1 = 7.5 kW

n_2 min^{-1}	M_{n2} Nm	f_S	i	P_t kW					Rn_2 [N] MC	MZ	HC/PC	HZ/PZ	FZ	
6.5	10100	1.3	221	11.0	**307L3**	**—**	**BN132MA4**	**M4LA4**	30000	37500	67500	88800	24100	314
6.5	10200	1.3	223	11.0	**309L3**	**—**	**BN132MA4**	**—**	—	—	69000	88800	19300	326
6.7	9460	1.0	214	12.0	**—**	**306R4**	**BN132MA4**	**M4LA4**	25000	28500	57000	65800	18500	304
7.0	9100	1.6	206	15.0	**—**	**307R4**	**BN132MA4**	**M4LA4**	30000	37500	67500	88800	23500	316
7.0	9100	2.2	206	15.0	**—**	**309R4**	**BN132MA4**	**—**	—	—	69000	88800	18800	328
7.0	9110	2.4	206	15.0	**—**	**310MR4**	**BN132MA4**	**—**	—	—	78000	98900	34000	340
7.1	9200	1.2	202	11.0	**307L3**	**—**	**BN132MA4**	**M4LA4**	30000	37500	67500	88800	23400	314
7.1	9200	1.8	202	11.0	**309L3**	**—**	**BN132MA4**	**—**	—	—	69000	88800	18700	326
7.1	9210	2.4	202	18.0	**310ML3**	**—**	**BN132MA4**	**—**	—	—	78000	98900	33800	338
7.6	8440	1.7	191	15.0	**—**	**307R4**	**BN132MA4**	**M4LA4**	30000	37500	67500	88800	22900	316
7.6	8440	2.0	191	15.0	**—**	**309R4**	**BN132MA4**	**—**	—	—	69000	88800	18300	328
7.9	8330	1.7	183	11.0	**309L3**	**—**	**BN132MA4**	**—**	—	—	69000	88800	18100	326
8.0	8010	1.2	181	12.0	**—**	**306R4**	**BN132MA4**	**M4LA4**	25000	28500	57000	65800	17500	304
8.1	8080	1.5	177	11.0	**307L3**	**—**	**BN132MA4**	**M4LA4**	30000	37500	67500	88800	22400	314
8.1	8090	2.2	177	18.0	**310ML3**	**—**	**BN132MA4**	**—**	—	—	78000	98900	32300	338
8.6	7430	1.0	168	12.0	**—**	**306R4**	**BN132MA4**	**M4LA4**	25000	28500	57000	65800	17100	304
8.7	7310	1.5	165	15.0	**—**	**307R4**	**BN132MA4**	**M4LA4**	30000	37500	67500	88800	21900	316
8.7	7310	2.2	165	15.0	**—**	**309R4**	**BN132MA4**	**—**	—	—	69000	88800	17500	328
8.9	7370	1.5	162	11.0	**307L3**	**—**	**BN132MA4**	**M4LA4**	30000	37500	67500	88800	21700	314
8.9	7370	2.2	162	11.0	**309L3**	**—**	**BN132MA4**	**—**	—	—	69000	88800	17400	326
9.1	6990	1.4	158	12.0	**—**	**306R4**	**BN132MA4**	**M4LA4**	25000	28500	57000	65800	16800	304
9.5	6940	1.1	152	7.5	**306L3**	**—**	**BN132MA4**	**M4LA4**	25000	28500	57000	65800	16500	302
9.5	6730	2.0	152	15.0	**—**	**307R4**	**BN132MA4**	**M4LA4**	30000	37500	67500	88800	21300	316
9.5	6730	2.8	152	15.0	**—**	**309R4**	**BN132MA4**	**—**	—	—	69000	88800	17000	328
9.8	6680	2.0	146	11.0	**307L3**	**—**	**BN132MA4**	**M4LA4**	30000	37500	67500	88800	21000	314
10.2	6430	1.2	141	7.5	**306L3**	**—**	**BN132MA4**	**M4LA4**	24800	28300	56600	65400	16100	302
10.4	6330	1.7	139	11.0	**307L3**	**—**	**BN132MA4**	**M4LA4**	29600	37000	66800	87800	20600	314
10.4	6330	2.5	139	11.0	**309L3**	**—**	**BN132MA4**	**—**	—	—	68200	87800	16500	326
11.1	5720	0.9	129	12.0	**—**	**305R4**	**BN132MA4**	**—**	20300	23200	39200	46500	10700	292
11.4	5740	2.3	126	11.0	**307L3**	**—**	**BN132MA4**	**M4LA4**	28700	35900	64800	85300	20000	314
11.4	5740	2.9	126	11.0	**309L3**	**—**	**BN132MA4**	**—**	—	—	66300	85300	16000	326
11.9	5530	1.4	121	7.5	**306L3**	**—**	**BN132MA4**	**M4LA4**	23600	26900	54100	62500	15300	302
12.0	5460	1.6	120	22.0	**—**	**307R3**	**BN132MA4**	**M4LA4**	28200	35300	63900	84000	19600	316
12.0	5460	2.4	120	22.0	**—**	**309R3**	**BN132MA4**	**—**	—	—	65300	84000	15700	328
12.1	5440	1.2	119	14.0	**—**	**306R3**	**BN132MA4**	**M4LA4**	23500	26800	53900	62200	15300	304
12.7	5170	2.0	113	11.0	**307L3**	**—**	**BN132MA4**	**M4LA4**	27700	34600	62800	82600	19300	314
12.8	5130	1.4	112	7.5	**306L3**	**—**	**BN132MA4**	**M4LA4**	23000	26200	52900	61100	15000	302
13.8	4770	1.1	105	7.5	**305L3**	**—**	**BN132MA4**	**M4LA4**	18900	21600	36800	43600	10000	290
13.8	4760	1.9	104	7.5	**306L3**	**—**	**BN132MA4**	**M4LA4**	22400	25600	51700	59700	14600	302
14.4	4580	2.7	100	11.0	**307L3**	**—**	**BN132MA4**	**M4LA4**	26600	33200	60600	79700	18500	314
14.5	4520	1.9	99.0	22.0	**—**	**307R3**	**BN132MA4**	**M4LA4**	26500	33100	60300	79400	18400	316
14.5	4520	2.8	99.0	22.0	**—**	**309R3**	**BN132MA4**	**—**	—	—	61700	79400	14700	328
14.6	4500	1.4	98.5	14.0	**—**	**306R3**	**BN132MA4**	**M4LA4**	22000	25100	50900	58700	14300	304
15.5	4240	2.9	93.0	11.0	**307L3**	**—**	**BN132MA4**	**M4LA4**	25900	32400	59200	77900	18100	314
16.0	4120	1.0	90.2	7.5	**305L3**	**—**	**BN132MA4**	**M4LA4**	18000	20500	35200	41700	9530	290
16.3	4030	2.1	88.3	7.5	**306L3**	**—**	**BN132MA4**	**M4LA4**	21200	24200	49200	56800	13800	302
17.0	3870	2.0	84.7	14.0	**—**	**306R3**	**BN132MA4**	**M4LA4**	20900	23900	48600	56100	13600	304
17.3	3810	2.7	83.4	22.0	**—**	**307R3**	**BN132MA4**	**M4LA4**	25000	31300	57300	75400	17400	316
17.6	3740	1.9	81.9	7.5	**306L3**	**—**	**BN132MA4**	**M4LA4**	20700	23600	48100	55500	13500	302
17.9	3680	2.8	80.6	11.0	**307L3**	**—**	**BN132MA4**	**M4LA4**	24700	30900	56700	74600	17200	314
18.3	3590	1.2	78.7	14.0	**—**	**305R3**	**BN132MA4**	**—**	17200	19600	33800	40000	9110	292
18.6	3520	1.0	77.2	7.5	**304L3**	**—**	**BN132MA4**	**M4LA4**	17100	19500	33600	39800	9050	278
18.6	3520	1.4	77.2	7.5	**305L3**	**—**	**BN132MA4**	**M4LA4**	17100	19500	33600	39800	9050	290
18.7	3510	2.4	77.0	7.5	**306L3**	**—**	**BN132MA4**	**M4LA4**	20300	23100	47200	54500	13200	302
19.6	3350	1.1	73.3	14.0	**—**	**305R3**	**BN132MA4**	**—**	16800	19200	33100	39200	8900	292
19.8	3330	2.2	72.9	14.0	**—**	**306R3**	**BN132MA4**	**M4LA4**	19900	22700	46500	53600	12900	304
19.9	3300	1.0	72.3	7.5	**304L3**	**—**	**BN132MA4**	**M4LA4**	16700	19100	32900	39000	8850	278
19.9	3300	1.3	72.3	7.5	**305L3**	**—**	**BN132MA4**	**M4LA4**	16700	19100	32900	39000	8850	290
19.9	3410	1.6	72.5	13.0	**306L2**	**—**	**BN132MA4**	**M4LA4**	19900	22700	46400	53600	12900	302
21.3	3080	2.3	67.5	14.0	**—**	**306R3**	**BN132MA4**	**M4LA4**	19400	22100	45400	52400	12600	304
22.1	2980	2.5	65.2	7.5	**306L3**	**—**	**BN132MA4**	**M4LA4**	19200	21900	44900	51900	12500	302
22.8	2880	1.2	63.1	7.5	**304L3**	**—**	**BN132MA4**	**M4LA4**	15900	18200	31600	37500	8460	278
22.8	2880	1.0	63.1	14.0	**—**	**304R3**	**BN132MA4**	**—**	15900	18200	31600	37500	8460	280

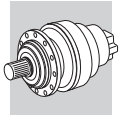

P_1 = 7.5 kW

n_2 min^{-1}	M_{n2} Nm	f_S	i	P_t kW					Rn_2 [N] MC	MZ	HC/PC	HZ/PZ	FZ	
22.8	2880	1.6	63.1	7.5	**305L3**	**—**	**BN132MA4**	**M4LA4**	15900	18200	31600	37500	8460	290
22.8	2880	1.5	63.1	14.0	**—**	**305R3**	**BN132MA4**	**—**	15900	18200	31600	37500	8460	292
24.8	2650	2.9	58.1	14.0	**—**	**306R3**	**BN132MA4**	**M4LA4**	18500	21100	43400	50100	12000	304
25.6	2650	2.0	56.3	13.0	**306L2**	**—**	**BN132MA4**	**M4LA4**	18300	20800	43000	49600	11900	302
25.8	2630	1.3	55.8	9.0	**305L2**	**—**	**BN132MA4**	**M4LA4**	15300	17500	30500	36100	8120	290
26.6	2470	1.4	54.2	14.0	**—**	**305R3**	**BN132MA4**	**—**	15200	17300	30200	35800	8040	292
27.0	2440	1.3	53.4	7.5	**304L3**	**—**	**BN132MA4**	**M4LA4**	15100	17200	30100	35600	8000	278
27.0	2440	1.6	53.4	7.5	**305L3**	**—**	**BN132MA4**	**M4LA4**	15100	17200	30100	35600	8000	290
27.0	2430	3.0	53.2	7.5	**306L3**	**—**	**BN132MA4**	**M4LA4**	17900	20500	42300	48800	11700	302
28.6	2290	1.0	50.3	14.0	**—**	**303R3**	**BN132MA4**	**—**	14800	16900	29500	35000	7840	268
28.6	2290	1.5	50.3	14.0	**—**	**304R3**	**BN132MA4**	**—**	14800	16900	29500	35000	7840	280
28.6	2290	1.9	50.3	14.0	**—**	**305R3**	**BN132MA4**	**—**	14800	16900	29500	35000	7840	292
30.0	2230	1.1	47.3	9.0	**304L2**	**—**	**BN132MA4**	**M4LA4**	14500	16600	29000	34400	7690	278
31	2130	1.0	46.6	14.0	**—**	**303R3**	**BN132MA4**	**—**	14400	16500	28900	34200	7650	268
31	2130	1.3	46.6	14.0	**—**	**304R3**	**BN132MA4**	**—**	14400	16500	28900	34200	7650	280
31	2130	2.0	46.6	14.0	**—**	**305R3**	**BN132MA4**	**—**	14400	16500	28900	34200	7650	292
31	2190	3.0	46.5	13.0	**306L2**	**—**	**BN132MA4**	**M4LA4**	17200	19600	40600	46900	11100	302
32	2100	1.7	44.6	9.0	**305L2**	**—**	**BN132MA4**	**M4LA4**	14200	16200	28500	33800	7540	290
33	1990	1.6	43.6	7.5	**304L3**	**—**	**BN132MA4**	**M4LA4**	14100	16100	28300	33500	7480	278
34	1940	1.1	42.6	14.0	**—**	**303R3**	**BN132MA4**	**—**	14000	16000	28100	33300	7420	268
34	1940	1.6	42.6	14.0	**—**	**304R3**	**BN132MA4**	**—**	14000	16000	28100	33300	7420	280
34	1940	2.0	42.6	14.0	**—**	**305R3**	**BN132MA4**	**—**	14000	16000	28100	33300	7420	292
38	1810	1.2	38.4	9.0	**303L2**	**—**	**BN132MA4**	**M4LA4**	13500	15400	27200	32300	7170	266
38	1810	1.6	38.4	9.0	**304L2**	**—**	**BN132MA4**	**M4LA4**	13500	15400	27200	32300	7170	278
38	1810	2.4	38.4	9.0	**305L2**	**—**	**BN132MA4**	**M4LA4**	13500	15400	27200	32300	7170	290
39	1700	0.9	37.3	12.0	**—**	**301R3**	**BN132MA4**	**—**	4140	4140	14300	15700	2370	258
39	1690	1.4	37.1	14.0	**—**	**303R3**	**BN132MA4**	**—**	13400	15300	27000	32000	7090	268
39	1690	2.0	37.1	14.0	**—**	**304R3**	**BN132MA4**	**—**	13400	15300	27000	32000	7090	280
39	1690	2.6	37.1	14.0	**—**	**305R3**	**BN132MA4**	**—**	13400	15300	27000	32000	7090	292
40	1680	1.1	35.8	9.0	**303L2**	**—**	**BN132MA4**	**M4LA4**	13200	15100	26700	31600	7000	266
40	1680	2.1	35.8	9.0	**305L2**	**—**	**BN132MA4**	**M4LA4**	13200	15100	26700	31600	7000	290
46	1440	1.5	31.5	14.0	**—**	**303R3**	**BN132MA4**	**—**	12600	14500	25700	30400	6710	268
46	1440	2.2	31.5	14.0	**—**	**304R3**	**BN132MA4**	**—**	12600	14500	25700	30400	6710	280
46	1440	2.6	31.5	14.0	**—**	**305R3**	**BN132MA4**	**—**	12600	14500	25700	30400	6710	292
47	1440	1.1	30.7	7.5	**301L2**	**—**	**BN132MA4**	**M4LA4**	3880	3880	13500	14800	2220	256
47	1390	1.1	30.4	12.0	**—**	**301R3**	**BN132MA4**	**—**	3870	3870	13500	14700	2210	258
47	1450	1.5	30.8	9.0	**303L2**	**—**	**BN132MA4**	**M4LA4**	12600	14300	25500	30200	6660	266
47	1450	2.0	30.8	9.0	**304L2**	**—**	**BN132MA4**	**M4LA4**	12600	14300	25500	30200	6660	278
47	1450	3.0	30.8	9.0	**305L2**	**—**	**BN132MA4**	**M4LA4**	12600	14300	25500	30200	6660	290
54	1240	1.5	26.4	9.0	**303L2**	**—**	**BN132MA4**	**M4LA4**	11900	13600	24400	28900	6330	266
54	1240	2.8	26.4	9.0	**305L2**	**—**	**BN132MA4**	**M4LA4**	11900	13600	24400	28900	6330	290
56	1170	1.8	25.7	14.0	**—**	**303R3**	**BN132MA4**	**—**	11800	13500	24100	28600	6270	268
56	1170	2.6	25.7	14.0	**—**	**304R3**	**BN132MA4**	**—**	11800	13500	24100	28600	6270	280
58	1130	1.2	24.8	12.0	**—**	**301R3**	**BN132MA4**	**—**	3620	3620	12700	13900	2070	258
59	1160	1.3	24.6	7.5	**301L2**	**—**	**BN132MA4**	**M4LA4**	3610	3610	12700	13800	2060	256
59	1150	1.9	24.5	9.0	**303L2**	**—**	**BN132MA4**	**M4LA4**	11600	13300	23800	28200	6170	266
59	1150	2.8	24.5	9.0	**304L2**	**—**	**BN132MA4**	**M4LA4**	11600	13300	23800	28200	6170	278
63	1070	2.0	22.7	9.0	**303L2**	**—**	**BN132MA4**	**M4LA4**	11400	13000	23300	27600	6020	266
63	1070	2.6	22.7	9.0	**304L2**	**—**	**BN132MA4**	**M4LA4**	11400	13000	23300	27600	6020	278
69	980	1.9	20.8	9.0	**303L2**	**—**	**BN132MA4**	**M4LA4**	11000	12600	22700	26900	5840	266
72	940	1.3	20.1	7.5	**301L2**	**—**	**BN132MA4**	**M4LA4**	3370	3370	11900	13000	1930	256
75	900	1.7	19.2	18.0	**—**	**303R2**	**BN132MA4**	**M4LA4**	10700	12300	22100	26200	5690	268
79	860	1.6	18.2	7.5	**301L2**	**—**	**BN132MA4**	**M4LA4**	3260	3260	11600	12600	1860	256
79	850	2.4	18.1	9.0	**303L2**	**—**	**BN132MA4**	**M4LA4**	10500	12000	21700	25800	5580	266
91	750	2.4	15.9	18.0	**—**	**303R2**	**BN132MA4**	**M4LA4**	10100	11500	20900	24800	5340	268
94	720	2.4	15.3	9.0	**303L2**	**—**	**BN132MA4**	**M4LA4**	9960	11400	20700	24500	5280	266
97	700	1.0	14.8	7.5	**300L2**	**—**	**BN132MA4**	**M4LA4**	3050	3050	10900	12600	1740	246
97	700	1.9	14.8	7.5	**301L2**	**—**	**BN132MA4**	**M4LA4**	3050	3050	10900	11900	1740	256
98	690	1.4	14.8	12.0	**—**	**301R2**	**BN132MA4**	**M4LA4**	3040	3040	10900	11900	1740	258
115	590	2.8	12.5	9.0	**303L2**	**—**	**BN132MA4**	**M4LA4**	9310	10600	19500	23100	4940	266
119	570	1.2	12.1	7.5	**300L2**	**—**	**BN132MA4**	**M4LA4**	2850	2850	10200	11900	1630	246
119	570	2.2	12.1	7.5	**301L2**	**—**	**BN132MA4**	**M4LA4**	2850	2850	10200	11200	1630	256
122	560	1.1	11.8	12.0	**—**	**300R2**	**BN132MA4**	**M4LA4**	2830	2830	10200	11800	1610	248
122	560	2.1	11.8	12.0	**—**	**301R2**	**BN132MA4**	**M4LA4**	2830	2830	10200	11100	1610	258
149	470	1.6	9.67	11.0	**303L1**	**—**	**BN132MA4**	**M4LA4**	8530	9750	18000	21300	4530	266

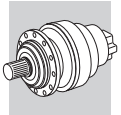

A

P_1 = 7.5 kW

n_2 min^{-1}	M_{n2} Nm	f_S	i	P_t kW					Rn_2 [N] MC	MZ	HC/PC	HZ/PZ	FZ	
160	440	1.5	9.00	7.5	**301L1**	**—**	**BN132MA4**	**M4LA4**	2580	2580	9360	10200	1470	256
165	410	1.5	8.74	12.0	**—**	**300R2**	**BN132MA4**	**M4LA4**	2550	2550	9280	10800	1460	248
165	410	2.7	8.74	12.0	**—**	**301R2**	**BN132MA4**	**M4LA4**	2550	2550	9280	10100	1460	258
200	350	1.2	7.20	7.5	**300L1**	**—**	**BN132MA4**	**M4LA4**	2390	2390	8750	10200	1370	246
200	350	2.2	7.20	7.5	**301L1**	**—**	**BN132MA4**	**M4LA4**	2390	2390	8750	9570	1370	256
202	340	1.8	7.13	12.0	**—**	**300R2**	**BN132MA4**	**M4LA4**	2390	2390	8730	10100	1360	248
250	280	1.7	5.77	7.5	**300L1**	**—**	**BN132MA4**	**M4LA4**	2220	2220	8190	9520	1270	246
338	210	2.4	4.26	7.5	300L1	**—**	**BN132MA4**	**M4LA4**	2010	2010	7480	8700	1150	246
414	170	2.8	3.48	7.5	**300L1**	**—**	**BN132MA4**	**M4LA4**	1880	1880	7040	8180	1070	246

P_1 = 9.2 kW

n_2 min^{-1}	M_{n2} Nm	f_S	i	P_t kW					Rn_2 [N] MC	MZ	HC/PC	HZ/PZ	FZ	
0.76	102200	1.5	1893	18.0	**317ML4**	**—**	**BN132MB4**	**—**	—	—	411300	436900	150000	408
0.90	86100	1.8	1595	18.0	**317ML4**	**—**	**BN132MB4**	**—**	—	—	401400	426400	150000	408
0.93	83900	1.5	1553	18.0	**316ML4**	**—**	**BN132MB4**	**—**	—	—	257000	288300	150000	398
0.96	80600	1.0	1492	18.0	**315ML4**	**—**	**BN132MB4**	**—**	—	—	167000	200200	90000	386
1.1	69000	1.1	1277	15.0	**314ML4**	**—**	**BN132MB4**	**—**	—	—	163300	195800	86500	374
1.1	69300	1.3	1284	18.0	**315ML4**	**—**	**BN132MB4**	**—**	—	—	163400	196000	86600	386
1.1	70700	1.7	1308	18.0	**316ML4**	**—**	**BN132MB4**	**—**	—	—	250800	281300	145300	398
1.1	71200	2.2	1318	18.0	**317ML4**	**—**	**BN132MB4**	**—**	—	—	390600	414900	145600	408
1.2	66800	1.8	1237	18.0	**316ML4**	**—**	**BN132MB4**	**—**	—	—	248800	279100	142600	398
1.3	59300	1.2	1099	15.0	**314ML4**	**—**	**BN132MB4**	**—**	—	—	159800	191700	82200	374
1.3	59600	1.5	1104	18.0	**315ML4**	**—**	**BN132MB4**	**—**	—	—	159900	191800	82400	386
1.3	59600	2.0	1104	18.0	**316ML4**	**—**	**BN132MB4**	**—**	—	—	244800	274600	137300	398
1.3	61200	2.5	1134	18.0	**317ML4**	**—**	**BN132MB4**	**—**	—	—	382300	406100	138500	408
1.4	54800	1.0	1014	11.0	**313ML4**	**—**	**BN132MB4**	**—**	—	—	170000	199200	71200	362
1.4	56000	1.4	1038	15.0	**314ML4**	**—**	**BN132MB4**	**—**	—	—	158500	190100	80700	374
1.4	56300	1.8	1043	18.0	**315ML4**	**—**	**BN132MB4**	**—**	—	—	158600	190200	80800	386
1.4	55100	2.1	1020	18.0	**316ML4**	**—**	**BN132MB4**	**—**	—	—	242000	271500	133700	398
1.5	50200	1.8	930	18.0	**315ML4**	**—**	**BN132MB4**	**—**	—	—	156100	187200	77800	386
1.5	51500	2.7	953	50	**—**	**317MR4**	**BN132MB4**	**—**	—	—	372900	396200	130700	410
1.6	48000	1.1	889	11.0	**313ML4**	**—**	**BN132MB4**	**—**	—	—	166800	195500	68100	362
1.6	50000	1.4	926	15.0	**314ML4**	**—**	**BN132MB4**	**—**	—	—	156000	187000	77700	374
1.6	49100	1.5	909	40	**—**	**315MR4**	**BN132MB4**	**—**	—	—	155600	186600	77200	388
1.6	47500	2.4	880	18.0	**316ML4**	**—**	**BN132MB4**	**—**	—	—	236900	265800	127300	398
1.7	44500	1.0	825	11.0	**311ML4**	**—**	**BN132MB4**	**—**	—	—	113900	116200	54000	350
1.7	46300	1.6	858	15.0	**314ML4**	**—**	**BN132MB4**	**—**	—	—	154300	185000	75700	374
1.7	46500	2.1	862	18.0	**315ML4**	**—**	**BN132MB4**	**—**	—	—	154400	185100	75800	386
1.8	42700	1.2	790	11.0	**313ML4**	**—**	**BN132MB4**	**—**	—	—	164000	192200	65500	362
1.8	42200	2.1	782	40	**—**	**315MR4**	**BN132MB4**	**—**	—	—	152300	182600	73400	388
1.8	42300	2.7	784	18.0	**316ML4**	**—**	**BN132MB4**	**—**	—	—	233100	261500	122500	398
1.8	42200	2.7	782	45	**—**	**316MR4**	**BN132MB4**	**—**	—	—	233000	261400	122400	400
1.9	40000	2.4	741	18.0	**315ML4**	**—**	**BN132MB4**	**—**	—	—	151100	181200	72100	386
2.0	39800	1.9	738	15.0	**314ML4**	**—**	**BN132MB4**	**—**	—	—	151000	181100	72000	374
2.0	38100	3.0	706	18.0	**316ML4**	**—**	**BN132MB4**	**—**	—	—	229600	257600	118300	398
2.1	37500	1.3	695	11.0	**313ML4**	**—**	**BN132MB4**	**—**	—	—	161000	188700	62800	362
2.1	36300	2.6	672	18.0	**315ML4**	**—**	**BN132MB4**	**—**	—	—	149000	178700	69800	386
2.2	34900	1.4	647	22.0	**—**	**313MR4**	**BN132MB4**	**—**	—	—	159400	186800	61300	364
2.2	36100	2.1	668	15.0	**314ML4**	**—**	**BN132MB4**	**—**	—	—	148900	178500	69700	374
2.2	35600	2.4	659	40	**—**	**315MR4**	**BN132MB4**	**—**	—	—	148600	178200	69400	388
2.3	33800	1.2	627	11.0	**311ML4**	**—**	**BN132MB4**	**—**	—	—	109500	111700	49300	350
2.3	34000	1.2	629	22.0	**—**	**311MR4**	**BN132MB4**	**—**	—	—	109600	111800	49300	352
2.3	34200	1.4	633	11.0	**313ML4**	**—**	**BN132MB4**	**—**	—	—	158900	186200	60800	362
2.3	33100	1.6	614	22.0	**—**	**314MR4**	**BN132MB4**	**—**	—	—	147100	176400	67700	376
2.3	33700	2.8	623	40	**—**	**315MR4**	**BN132MB4**	**—**	—	—	147400	176800	68100	388
2.4	31800	2.3	588	15.0	**314ML4**	**—**	**BN132MB4**	**—**	—	—	146200	175300	66800	374
2.4	31900	3.0	591	18.0	**315ML4**	**—**	**BN132MB4**	**—**	—	—	146300	175400	66900	386
2.5	30700	1.3	568	11.0	**311ML4**	**—**	**BN132MB4**	**—**	—	—	108000	110200	47700	350
2.5	31000	2.2	575	15.0	**314ML4**	**—**	**BN132MB4**	**—**	—	—	145700	174700	66300	374
2.6	30400	1.8	564	11.0	**313ML4**	**—**	**BN132MB4**	**—**	—	—	156300	183200	58500	362

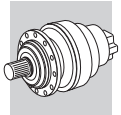

P_1 = 9.2 kW

n_2 min^{-1}	M_{n2} Nm	f_S	i	P_t kW					Rn_2 [N] MC	MZ	HC/PC	HZ/PZ	FZ	
2.7	28900	1.7	535	22.0	—	**313MR4**	**BN132MB4**	—	—	—	155100	181800	57500	364
2.7	28500	2.3	528	22.0	—	**314MR4**	**BN132MB4**	—	—	—	143900	172600	64400	376
2.8	27400	0.9	507	11.0	**310ML4**	—	**BN132MB4**	—	—	—	84600	107200	45900	338
2.8	27900	0.9	517	15.0	—	**310MR4**	**BN132MB4**	—	—	—	84800	107500	46200	340
2.8	27700	1.7	512	11.0	**311ML4**	—	**BN132MB4**	—	—	—	106400	108600	46100	350
2.8	28100	1.4	520	22.0	—	**311MR4**	**BN132MB4**	—	—	—	106600	108800	46300	352
2.8	27700	1.7	514	11.0	**313ML4**	—	**BN132MB4**	—	—	—	154200	180700	56700	362
2.9	26500	1.2	490	22.0	—	**311MR4**	**BN132MB4**	—	—	—	105700	107900	45400	352
2.9	26800	1.8	496	22.0	—	**313MR4**	**BN132MB4**	—	—	—	153500	179800	56100	364
2.9	26700	2.8	495	15.0	**314ML4**	—	**BN132MB4**	—	—	—	142600	171000	63000	374
3.2	24500	1.2	453	11.0	**310ML4**	—	**BN132MB4**	—	—	—	83200	105500	44200	338
3.2	24400	2.3	452	11.0	**313ML4**	—	**BN132MB4**	—	—	—	151400	177500	54400	362
3.2	24300	1.9	450	22.0	—	**313MR4**	**BN132MB4**	—	—	—	151400	177400	54300	364
3.2	24000	2.5	445	22.0	—	**314MR4**	**BN132MB4**	—	—	—	140500	168400	60800	376
3.3	23600	1.7	438	22.0	—	**311MR4**	**BN132MB4**	—	—	—	104000	106200	43700	352
3.5	22200	2.1	410	11.0	**311ML4**	—	**BN132MB4**	—	—	—	103100	105200	42800	350
3.5	22300	1.8	413	22.0	—	**311MR4**	**BN132MB4**	—	—	—	103200	105300	42900	352
3.7	21300	2.7	394	11.0	**313ML4**	—	**BN132MB4**	—	—	—	148500	174000	51900	362
3.7	20900	2.2	387	22.0	—	**313MR4**	**BN132MB4**	—	—	—	148100	173600	51600	364
3.8	20700	1.2	383	15.0	—	**310MR4**	**BN132MB4**	—	—	—	81200	103000	41800	340
4.1	18900	1.1	349	7.5	**309L4**	—	**BN132MB4**	—	—	—	70900	91300	22400	326
4.1	19500	1.0	350	18.0	**310ML3**	—	**BN132MB4**	—	—	—	80200	101700	40600	338
4.1	18800	2.4	348	11.0	**311ML4**	—	**BN132MB4**	—	—	—	100700	102700	40500	350
4.2	18700	1.6	347	15.0	—	**310MR4**	**BN132MB4**	—	—	—	80100	101600	40400	340
4.2	18400	2.1	341	22.0	—	**311MR4**	**BN132MB4**	—	—	—	100400	102500	40200	352
4.2	18700	3.0	346	22.0	—	**313MR4**	**BN132MB4**	—	—	—	145700	170800	49700	364
4.3	17900	1.0	331	15.0	—	**309R4**	**BN132MB4**	—	—	—	70400	90600	22100	328
4.7	16500	1.4	305	15.0	—	**310MR4**	**BN132MB4**	—	—	—	78600	99700	38700	340
4.7	16900	1.8	304	18.0	**313ML3**	—	**BN132MB4**	—	—	—	143100	167700	47600	362
4.7	16700	2.6	309	22.0	—	**313MR4**	**BN132MB4**	—	—	—	143400	168100	47900	364
4.9	16400	1.4	295	18.0	**310ML3**	—	**BN132MB4**	—	—	—	78300	99300	38300	338
4.9	16200	1.7	291	18.0	**311ML3**	—	**BN132MB4**	—	—	—	98200	100200	38200	350
4.9	15900	2.3	294	22.0	—	**311MR4**	**BN132MB4**	—	—	—	98300	100300	38300	352
5.1	15800	1.0	284	11.0	**309L3**	—	**BN132MB4**	—	—	—	69000	88800	20900	326
5.1	15400	1.1	284	15.0	—	**309R4**	**BN132MB4**	—	—	—	69000	88800	21000	328
5.2	14900	1.9	276	15.0	—	**310MR4**	**BN132MB4**	—	—	—	78000	98900	37500	340
5.6	13900	1.1	258	15.0	—	**307R4**	**BN132MB4**	**M4LB4**	30000	37500	67500	88800	25400	316
5.6	13900	1.3	258	15.0	—	**309R4**	**BN132MB4**	—	—	—	69000	88800	20300	328
5.6	13900	1.6	258	15.0	—	**310MR4**	**BN132MB4**	—	—	—	78000	98900	36700	340
5.8	13900	1.3	249	18.0	**310ML3**	—	**BN132MB4**	—	—	—	78000	98900	36200	338
5.9	13700	2.7	245	18.0	**311ML3**	—	**BN132MB4**	—	—	—	98000	100000	36000	350
6.0	13300	1.0	239	11.0	**309L3**	—	**BN132MB4**	—	—	—	69000	88800	19800	326
6.1	12800	2.2	238	15.0	—	**310MR4**	**BN132MB4**	—	—	—	78000	98900	35700	340
6.2	12500	1.3	232	15.0	—	**309R4**	**BN132MB4**	—	—	—	69000	88800	19600	328
6.3	12800	1.5	230	18.0	**310ML3**	—	**BN132MB4**	—	—	—	78000	98900	35300	338
6.5	12300	1.0	221	11.0	**307L3**	—	**BN132MB4**	**M4LB4**	30000	37500	67500	88800	24100	314
6.5	12400	1.0	223	11.0	**309L3**	—	**BN132MB4**	—	—	—	69000	88800	19300	326
7.0	11100	1.3	206	15.0	—	**307R4**	**BN132MB4**	**M4LB4**	30000	37500	67500	88800	23500	316
7.0	11100	1.8	206	15.0	—	**309R4**	**BN132MB4**	—	—	—	69000	88800	18800	328
7.0	11100	2.0	206	15.0	—	**310MR4**	**BN132MB4**	—	—	—	78000	98900	34000	340
7.1	11200	1.0	202	11.0	**307L3**	—	**BN132MB4**	**M4LB4**	30000	37500	67500	88800	23400	314
7.1	11200	1.5	202	11.0	**309L3**	—	**BN132MB4**	—	—	—	69000	88800	18700	326
7.1	11200	2.0	202	18.0	**310ML3**	—	**BN132MB4**	—	—	—	78000	98900	33800	338
7.6	10300	1.4	191	15.0	—	**307R4**	**BN132MB4**	**M4LB4**	30000	37500	67500	88800	22900	316
7.6	10300	1.7	191	15.0	—	**309R4**	**BN132MB4**	—	—	—	69000	88800	18300	328
7.6	10200	2.7	189	15.0	—	**310MR4**	**BN132MB4**	—	—	—	78000	98900	33100	340
7.9	10200	1.4	183	11.0	**309L3**	—	**BN132MB4**	—	—	—	69000	88800	18100	326
7.9	10100	3.0	182	18.0	**313ML3**	—	**BN132MB4**	—	—	—	142000	166400	40100	362
8.0	9770	1.0	181	12.0	—	**306R4**	**BN132MB4**	**M4LB4**	25000	28500	57000	65800	17500	304
8.1	9850	1.2	177	11.0	**307L3**	—	**BN132MB4**	**M4LB4**	30000	37500	67500	88800	22400	314
8.1	9870	1.8	177	18.0	**310ML3**	—	**BN132MB4**	—	—	—	78000	98900	32300	338
8.7	8920	1.2	165	15.0	—	**307R4**	**BN132MB4**	**M4LB4**	30000	37500	67500	88800	21900	316
8.7	8920	1.8	165	15.0	—	**309R4**	**BN132MB4**	—	—	—	69000	88800	17500	328
8.8	9110	2.9	164	18.0	**310ML3**	—	**BN132MB4**	—	—	—	78000	98900	31500	338
8.9	8990	1.2	162	11.0	**307L3**	—	**BN132MB4**	**M4LB4**	30000	37500	67500	88800	21700	314

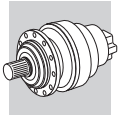

A

P_1 = 9.2 kW

n_2 min^{-1}	M_{n2} Nm	f_S	i	P_t kW					Rn_2 [N] MC	MZ	HC/PC	HZ/PZ	FZ	
8.9	8990	1.8	162	11.0	**309L3**	**—**	**BN132MB4**	**—**	—	—	69000	88800	17400	326
9.1	8520	1.1	158	12.0	**—**	**306R4**	**BN132MB4**	**M4LB4**	25000	28500	57000	65800	16800	304
9.5	8210	1.7	152	15.0	**—**	**307R4**	**BN132MB4**	**M4LB4**	30000	37500	67500	88800	21300	316
9.5	8210	2.3	152	15.0	**—**	**309R4**	**BN132MB4**	**—**	—	—	69000	88800	17000	328
9.6	8310	2.6	149	18.0	**310ML3**	**—**	**BN132MB4**	**—**	—	—	78000	98900	30500	338
9.8	8150	1.7	146	11.0	**307L3**	**—**	**BN132MB4**	**M4LB4**	30000	37500	67500	88800	21000	314
10.2	7850	1.0	141	7.5	**306L3**	**—**	**BN132MB4**	**M4LB4**	24800	28300	56600	65400	16100	302
10.4	7730	1.4	139	11.0	**307L3**	**—**	**BN132MB4**	**M4LB4**	29600	37000	66800	87800	20600	314
10.4	7730	2.1	139	11.0	**309L3**	**—**	**BN132MB4**	**—**	—	—	68200	87800	16500	326
11.4	7010	1.9	126	11.0	**307L3**	**—**	**BN132MB4**	**M4LB4**	28700	35900	64800	85300	20000	314
11.4	7010	2.4	126	11.0	**309L3**	**—**	**BN132MB4**	**—**	—	—	66300	85300	16000	326
11.9	6750	1.2	121	7.5	**306L3**	**—**	**BN132MB4**	**M4LB4**	23600	26900	54100	62500	15300	302
12.0	6670	1.3	120	22.0	**—**	**307R3**	**BN132MB4**	**M4LB4**	28200	35300	63900	84000	19600	316
12.0	6670	1.9	120	22.0	**—**	**309R3**	**BN132MB4**	**—**	—	—	65300	84000	15700	328
12.0	6670	2.6	120	22.0	**—**	**310MR3**	**BN132MB4**	**—**	—	—	73800	93600	28400	340
12.1	6630	1.0	119	14.0	**—**	**306R3**	**BN132MB4**	**M4LB4**	23500	26800	53900	62200	15300	304
12.7	6310	1.7	113	11.0	**307L3**	**—**	**BN132MB4**	**M4LB4**	27700	34600	62800	82600	19300	314
12.7	6310	2.5	113	11.0	**309L3**	**—**	**BN132MB4**	**—**	—	—	64200	82600	15400	326
12.8	6250	1.2	112	7.5	**306L3**	**—**	**BN132MB4**	**M4LB4**	23000	26200	52900	61100	15000	302
13.8	5800	1.5	104	7.5	**306L3**	**—**	**BN132MB4**	**M4LB4**	22400	25600	51700	59700	14600	302
14.4	5580	2.2	100	11.0	**307L3**	**—**	**BN132MB4**	**M4LB4**	26600	33200	60600	79700	18500	314
14.4	5580	3.0	100	11.0	**309L3**	**—**	**BN132MB4**	**—**	—	—	61900	79700	14800	326
14.5	5510	1.6	99.0	22.0	**—**	**307R3**	**BN132MB4**	**M4LB4**	26500	33100	60300	79400	18400	316
14.5	5510	2.3	99.0	22.0	**—**	**309R3**	**BN132MB4**	**—**	—	—	61700	79400	14700	328
14.5	5510	2.9	99.0	22.0	**—**	**310MR3**	**BN132MB4**	**—**	—	—	69700	88400	26600	340
14.6	5480	1.2	98.5	14.0	**—**	**306R3**	**BN132MB4**	**M4LB4**	22000	25100	50900	58700	14300	304
15.5	5180	2.4	93.0	11.0	**307L3**	**—**	**BN132MB4**	**M4LB4**	25900	32400	59200	77900	18100	314
15.5	5180	2.9	93.0	11.0	**309L3**	**—**	**BN132MB4**	**—**	—	—	60500	77900	14400	326
16.3	4910	1.8	88.3	7.5	**306L3**	**—**	**BN132MB4**	**M4LB4**	21200	24200	49200	56800	13800	302
17.0	4720	1.6	84.7	14.0	**—**	**306R3**	**BN132MB4**	**M4LB4**	20900	23900	48600	56100	13600	304
17.3	4640	2.2	83.4	22.0	**—**	**307R3**	**BN132MB4**	**M4LB4**	25000	31300	57300	75400	17400	316
17.6	4560	1.5	81.9	7.5	**306L3**	**—**	**BN132MB4**	**M4LB4**	20700	23600	48100	55500	13500	302
17.9	4490	2.3	80.6	11.0	**307L3**	**—**	**BN132MB4**	**M4LB4**	24700	30900	56700	74600	17200	314
18.3	4380	1.0	78.7	14.0	**—**	**305R3**	**BN132MB4**	**—**	17200	19600	33800	40000	9110	292
18.3	4380	2.6	78.6	22.0	**—**	**307R3**	**BN132MB4**	**M4LB4**	24500	30600	56300	74100	17100	316
18.6	4300	1.1	77.2	7.5	**305L3**	**—**	**BN132MB4**	**M4LB4**	17100	19500	33600	39800	9050	290
18.7	4290	2.0	77.0	7.5	**306L3**	**—**	**BN132MB4**	**M4LB4**	20300	23100	47200	54500	13200	302
19.4	4130	2.8	74.1	11.0	**307L3**	**—**	**BN132MB4**	**M4LB4**	24000	30100	55300	72800	16700	314
19.8	4060	1.8	72.9	14.0	**—**	**306R3**	**BN132MB4**	**M4LB4**	19900	22700	46500	53600	12900	304
19.9	4020	1.0	72.3	7.5	**305L3**	**—**	**BN132MB4**	**M4LB4**	16700	19100	32900	39000	8850	290
19.9	4160	1.3	72.5	13.0	**306L2**	**—**	**BN132MB4**	**M4LB4**	19900	22700	46400	53600	12900	302
20.1	3990	2.5	71.8	22.0	**—**	**307R3**	**BN132MB4**	**M4LB4**	23800	29700	54800	72100	16600	316
21.3	3760	1.9	67.5	14.0	**—**	**306R3**	**BN132MB4**	**M4LB4**	19400	22100	45400	52400	12600	304
22.1	3630	2.1	65.2	7.5	**306L3**	**—**	**BN132MB4**	**M4LB4**	19200	21900	44900	51900	12500	302
22.8	3510	1.0	63.1	7.5	**304L3**	**—**	**BN132MB4**	**M4LB4**	15900	18200	31600	37500	8460	278
22.8	3510	1.4	63.1	7.5	**305L3**	**—**	**BN132MB4**	**M4LB4**	15900	18200	31600	37500	8460	290
22.8	3510	1.2	63.1	14.0	**—**	**305R3**	**BN132MB4**	**—**	15900	18200	31600	37500	8460	292
24.8	3230	2.4	58.1	14.0	**—**	**306R3**	**BN132MB4**	**M4LB4**	18500	21100	43400	50100	12000	304
25.6	3230	1.6	56.3	13.0	**306L2**	**—**	**BN132MB4**	**M4LB4**	18300	20800	43000	49600	11900	302
25.8	3200	1.1	55.8	9.0	**305L2**	**—**	**BN132MB4**	**M4LB4**	15300	17500	30500	36100	8120	290
26.6	3020	1.2	54.2	14.0	**—**	**305R3**	**BN132MB4**	**—**	15200	17300	30200	35800	8040	292
27.0	2970	1.1	53.4	7.5	**304L3**	**—**	**BN132MB4**	**M4LB4**	15100	17200	30100	35600	8000	278
27.0	2970	1.4	53.4	7.5	**305L3**	**—**	**BN132MB4**	**M4LB4**	15100	17200	30100	35600	8000	290
27.0	2960	2.4	53.2	7.5	**306L3**	**—**	**BN132MB4**	**M4LB4**	17900	20500	42300	48800	11700	302
28.6	2800	1.2	50.3	14.0	**—**	**304R3**	**BN132MB4**	**—**	14800	16900	29500	35000	7840	280
28.6	2800	1.6	50.3	14.0	**—**	**305R3**	**BN132MB4**	**—**	14800	16900	29500	35000	7840	292
31	2590	1.1	46.6	14.0	**—**	**304R3**	**BN132MB4**	**—**	14400	16500	28900	34200	7650	280
31	2590	1.7	46.6	14.0	**—**	**305R3**	**BN132MB4**	**—**	14400	16500	28900	34200	7650	292
31	2670	2.4	46.5	13.0	**306L2**	**—**	**BN132MB4**	**M4LB4**	17200	19600	40600	46900	11100	302
31	2580	2.9	46.3	14.0	**—**	**306R3**	**BN132MB4**	**M4LB4**	17100	19500	40600	46800	11100	304
32	2560	1.4	44.6	9.0	**305L2**	**—**	**BN132MB4**	**M4LB4**	14200	16200	28500	33800	7540	290
33	2430	1.3	43.6	7.5	**304L3**	**—**	**BN132MB4**	**M4LB4**	14100	16100	28300	33500	7480	278
34	2370	1.3	42.6	14.0	**—**	**304R3**	**BN132MB4**	**—**	14000	16000	28100	33300	7420	280

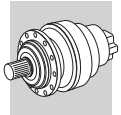

P_1 = 9.2 kW

n_2 min^{-1}	M_{n2} Nm	f_S	i	P_t kW					Rn_2 [N] MC	MZ	HC/PC	HZ/PZ	FZ	
34	2370	1.6	42.6	14.0	—	**305R3**	**BN132MB4**	—	14000	16000	28100	33300	7420	292
37	2210	2.9	38.4	13.0	**306L2**	—	**BN132MB4**	**M4LB4**	16100	18400	38400	44300	10500	302
38	2200	1.0	38.4	9.0	**303L2**	—	**BN132MB4**	**M4LB4**	13500	15400	27200	32300	7170	266
38	2200	1.3	38.4	9.0	**304L2**	—	**BN132MB4**	**M4LB4**	13500	15400	27200	32300	7170	278
38	2200	2.0	38.4	9.0	**305L2**	—	**BN132MB4**	**M4LB4**	13500	15400	27200	32300	7170	290
39	2070	1.2	37.1	14.0	—	**303R3**	**BN132MB4**	—	13400	15300	27000	32000	7090	268
39	2070	1.7	37.1	14.0	—	**304R3**	**BN132MB4**	—	13400	15300	27000	32000	7090	280
39	2070	2.1	37.1	14.0	—	**305R3**	**BN132MB4**	—	13400	15300	27000	32000	7090	292
40	2050	1.7	35.8	9.0	**305L2**	—	**BN132MB4**	**M4LB4**	13200	15100	26700	31600	7000	290
46	1750	1.2	31.5	14.0	—	**303R3**	**BN132MB4**	—	12600	14500	25700	30400	6710	268
46	1750	1.8	31.5	14.0	—	**304R3**	**BN132MB4**	—	12600	14500	25700	30400	6710	280
46	1750	2.2	31.5	14.0	—	**305R3**	**BN132MB4**	—	12600	14500	25700	30400	6710	292
47	1760	0.9	30.7	7.5	**301L2**	—	**BN132MB4**	**M4LB4**	3880	3880	13500	14800	2220	256
47	1690	0.9	30.4	12.0	—	**301R3**	**BN132MB4**	—	3870	3870	13500	14700	2210	258
47	1770	1.2	30.8	9.0	**303L2**	—	**BN132MB4**	**M4LB4**	12600	14300	25500	30200	6660	266
47	1770	1.6	30.8	9.0	**304L2**	—	**BN132MB4**	**M4LB4**	12600	14300	25500	30200	6660	278
47	1770	2.4	30.8	9.0	**305L2**	—	**BN132MB4**	**M4LB4**	12600	14300	25500	30200	6660	290
54	1520	1.2	26.4	9.0	**303L2**	—	**BN132MB4**	**M4LB4**	11900	13600	24400	28900	6330	266
54	1520	2.3	26.4	9.0	**305L2**	—	**BN132MB4**	**M4LB4**	11900	13600	24400	28900	6330	290
56	1430	1.4	25.7	14.0	—	**303R3**	**BN132MB4**	—	11800	13500	24100	28600	6270	268
56	1430	2.1	25.7	14.0	—	**304R3**	**BN132MB4**	—	11800	13500	24100	28600	6270	280
56	1430	2.6	25.7	14.0	—	**305R3**	**BN132MB4**	—	11800	13500	24100	28600	6270	292
58	1380	1.0	24.8	12.0	—	**301R3**	**BN132MB4**	—	3620	3620	12700	13900	2070	258
59	1410	1.1	24.6	7.5	**301L2**	—	**BN132MB4**	**M4LB4**	3610	3610	12700	13800	2060	256
59	1410	1.5	24.5	9.0	**303L2**	—	**BN132MB4**	**M4LB4**	11600	13300	23800	28200	6170	266
59	1410	2.3	24.5	9.0	**304L2**	—	**BN132MB4**	**M4LB4**	11600	13300	23800	28200	6170	278
59	1410	2.8	24.5	9.0	**305L2**	—	**BN132MB4**	**M4LB4**	11600	13300	23800	28200	6170	290
63	1300	1.6	22.7	9.0	**303L2**	—	**BN132MB4**	**M4LB4**	11400	13000	23300	27600	6020	266
63	1300	2.1	22.7	9.0	**304L2**	—	**BN132MB4**	**M4LB4**	11400	13000	23300	27600	6020	278
69	1190	1.5	20.8	9.0	**303L2**	—	**BN132MB4**	**M4LB4**	11000	12600	22700	26900	5840	266
69	1190	2.5	20.8	9.0	**304L2**	—	**BN132MB4**	**M4LB4**	11000	12600	22700	26900	5840	278
69	1190	2.8	20.8	9.0	**305L2**	—	**BN132MB4**	**M4LB4**	11000	12600	22700	26900	5840	290
72	1150	1.1	20.1	7.5	**301L2**	—	**BN132MB4**	**M4LB4**	3370	3370	11900	13000	1930	256
75	1100	1.4	19.2	18.0	—	**303R2**	**BN132MB4**	**M4LB4**	10700	12300	22100	26200	5690	268
75	1100	2.6	19.2	18.0	—	**305R2**	**BN132MB4**	**M4LB4**	10700	12300	22100	26200	5690	292
79	1040	1.3	18.2	7.5	**301L2**	—	**BN132MB4**	**M4LB4**	3260	3260	11600	12600	1860	256
79	1040	2.0	18.1	9.0	**303L2**	—	**BN132MB4**	**M4LB4**	10500	12000	21700	25800	5580	266
79	1040	2.9	18.1	9.0	**304L2**	—	**BN132MB4**	**M4LB4**	10500	12000	21700	25800	5580	278
86	970	2.5	16.8	18.0	—	**304R2**	**BN132MB4**	**M4LB4**	10300	11700	21300	25200	5450	280
91	910	2.0	15.9	18.0	—	**303R2**	**BN132MB4**	**M4LB4**	10100	11500	20900	24800	5340	268
94	880	2.0	15.3	9.0	**303L2**	—	**BN132MB4**	**M4LB4**	9960	11400	20700	24500	5280	266
97	850	1.5	14.8	7.5	**301L2**	—	**BN132MB4**	**M4LB4**	3050	3050	10900	11900	1740	256
98	850	1.1	14.8	12.0	—	**301R2**	**BN132MB4**	**M4LB4**	3040	3040	10900	11900	1740	258
105	780	2.5	13.7	18.0	—	**303R2**	**BN132MB4**	**M4LB4**	9580	10900	20000	23700	5080	268
115	720	2.3	12.5	9.0	**303L2**	—	**BN132MB4**	**M4LB4**	9310	10600	19500	23100	4940	266
119	700	1.0	12.1	7.5	**300L2**	—	**BN132MB4**	**M4LB4**	2850	2850	10200	11900	1630	246
119	700	1.8	12.1	7.5	**301L2**	—	**BN132MB4**	**M4LB4**	2850	2850	10200	11200	1630	256
122	680	1.7	11.8	12.0	—	**301R2**	**BN132MB4**	**M4LB4**	2830	2830	10200	11100	1610	258
149	570	1.3	9.67	11.0	**303L1**	—	**BN132MB4**	**M4LB4**	8530	9750	18000	21300	4530	266
160	530	1.2	9.00	7.5	**301L1**	—	**BN132MB4**	**M4LB4**	2580	2580	9360	10200	1470	256
165	500	1.2	8.74	12.0	—	**300R2**	**BN132MB4**	**M4LB4**	2550	2550	9280	10800	1460	248
165	500	2.2	8.74	12.0	—	**301R2**	**BN132MB4**	**M4LB4**	2550	2550	9280	10100	1460	258
192	440	2.8	7.50	11.0	**303L1**	—	**BN132MB4**	**M4LB4**	7840	8960	16700	19800	4160	266
200	430	1.0	7.20	7.5	**300L1**	—	**BN132MB4**	**M4LB4**	2390	2390	8750	10200	1370	246
200	430	1.8	7.20	7.5	**301L1**	—	**BN132MB4**	**M4LB4**	2390	2390	8750	9570	1370	256
202	410	1.4	7.13	12.0	—	**300R2**	**BN132MB4**	**M4LB4**	2390	2390	8730	10100	1360	248
202	410	2.6	7.13	12.0	—	**301R2**	**BN132MB4**	**M4LB4**	2390	2390	8730	9540	1360	258
250	340	1.4	5.77	7.5	**300L1**	—	**BN132MB4**	**M4LB4**	2220	2220	8190	9520	1270	246
250	340	2.8	5.77	7.5	**301L1**	—	**BN132MB4**	**M4LB4**	2220	2220	8190	8950	1270	256
338	250	2.0	4.26	7.5	**300L1**	—	**BN132MB4**	**M4LB4**	2010	2010	7480	8700	1150	246
414	210	2.3	3.48	7.5	**300L1**	—	**BN132MB4**	**M4LB4**	1880	1880	7040	8180	1070	246

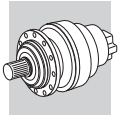

A

P_1 = 11 kW

n_2 min^{-1}	M_{n2} Nm	f_S	i	P_t kW					Rn_2 [N] MC	MZ	HC/PC	HZ/PZ	FZ	
0.76	122300	1.2	1893	18.0	**317ML4**	—	**BN160MR4**	—	—	—	411300	436900	150000	408
0.90	103100	1.5	1595	18.0	**317ML4**	—	**BN160MR4**	—	—	—	401400	426400	150000	408
0.93	100400	1.2	1553	18.0	**316ML4**	—	**BN160MR4**	—	—	—	257000	288300	150000	398
1.1	83000	1.1	1284	18.0	**315ML4**	—	**BN160MR4**	—	—	—	163400	196000	86600	386
1.1	84600	1.4	1308	18.0	**316ML4**	—	**BN160MR4**	—	—	—	250800	281300	145300	398
1.1	85200	1.8	1318	18.0	**317ML4**	—	**BN160MR4**	—	—	—	390600	414900	145600	408
1.2	80000	1.5	1237	18.0	**316ML4**	—	**BN160MR4**	—	—	—	248800	279100	142600	398
1.3	71000	1.0	1099	15.0	**314ML4**	—	**BN160MR4**	—	—	—	159800	191700	82200	374
1.3	71400	1.3	1104	18.0	**315ML4**	—	**BN160MR4**	—	—	—	159900	191800	82400	386
1.3	71400	1.7	1104	18.0	**316ML4**	—	**BN160MR4**	—	—	—	244800	274600	137300	398
1.3	73300	2.1	1134	18.0	**317ML4**	—	**BN160MR4**	—	—	—	382300	406100	138500	408
1.4	67100	1.1	1038	15.0	**314ML4**	—	**BN160MR4**	—	—	—	158500	190100	80700	374
1.4	67400	1.5	1043	18.0	**315ML4**	—	**BN160MR4**	—	—	—	158600	190200	80800	386
1.4	65900	1.8	1020	18.0	**316ML4**	—	**BN160MR4**	—	—	—	242000	271500	133700	398
1.4	66700	2.6	1032	18.0	**317ML4**	—	**BN160MR4**	—	—	—	377200	400700	134200	408
1.5	60100	1.5	930	18.0	**315ML4**	—	**BN160MR4**	—	—	—	156100	187200	77800	386
1.5	61600	2.3	953	50	—	**317MR4**	**BN160MR4**	—	—	—	372900	396200	130700	410
1.6	57500	0.9	889	11.0	**313ML4**	—	**BN160MR4**	—	—	—	166800	195500	68100	362
1.6	59800	1.2	926	15.0	**314ML4**	—	**BN160MR4**	—	—	—	156000	187000	77700	374
1.6	58800	1.2	909	40	—	**315MR4**	**BN160MR4**	—	—	—	155600	186600	77200	388
1.6	56900	2.0	880	18.0	**316ML4**	—	**BN160MR4**	—	—	—	236900	265800	127300	398
1.6	58400	2.7	904	18.0	**317ML4**	—	**BN160MR4**	—	—	—	370100	393200	128400	408
1.7	55400	1.3	858	15.0	**314ML4**	—	**BN160MR4**	—	—	—	154300	185000	75700	374
1.7	55700	1.7	862	18.0	**315ML4**	—	**BN160MR4**	—	—	—	154400	185100	75800	386
1.8	51000	1.0	790	11.0	**313ML4**	—	**BN160MR4**	—	—	—	164000	192200	65500	362
1.8	50600	1.7	782	40	—	**315MR4**	**BN160MR4**	—	—	—	152300	182600	73400	388
1.8	50700	2.3	784	18.0	**316ML4**	—	**BN160MR4**	—	—	—	233100	261500	122500	398
1.8	50600	2.3	782	45	—	**316MR4**	**BN160MR4**	—	—	—	233000	261400	122400	400
1.9	47900	2.0	741	18.0	**315ML4**	—	**BN160MR4**	—	—	—	151100	181200	72100	386
2.0	47700	1.5	738	15.0	**314ML4**	—	**BN160MR4**	—	—	—	151000	181100	72000	374
2.0	45700	2.5	706	18.0	**316ML4**	—	**BN160MR4**	—	—	—	229600	257600	118300	398
2.1	44900	1.1	695	11.0	**313ML4**	—	**BN160MR4**	—	—	—	161000	188700	62800	362
2.1	43400	2.2	672	18.0	**315ML4**	—	**BN160MR4**	—	—	—	149000	178700	69800	386
2.2	41800	1.2	647	22.0	—	**313MR4**	**BN160MR4**	—	—	—	159400	186800	61300	364
2.2	43200	1.8	668	15.0	**314ML4**	—	**BN160MR4**	—	—	—	148900	178500	69700	374
2.2	42600	2.0	659	40	—	**315MR4**	**BN160MR4**	—	—	—	148600	178200	69400	388
2.2	42600	2.6	659	45	—	**316MR4**	**BN160MR4**	—	—	—	227400	255000	115600	400
2.3	40500	1.0	627	11.0	**311ML4**	—	**BN160MR4**	—	—	—	109500	111700	49300	350
2.3	40600	1.0	629	22.0	—	**311MR4**	**BN160MR4**	—	—	—	109600	111800	49300	352
2.3	40900	1.2	633	11.0	**313ML4**	—	**BN160MR4**	—	—	—	158900	186200	60800	362
2.3	39700	1.4	614	22.0	—	**314MR4**	**BN160MR4**	—	—	—	147100	176400	67700	376
2.3	40300	2.4	623	40	—	**315MR4**	**BN160MR4**	—	—	—	147400	176800	68100	388
2.3	40600	2.8	628	18.0	**316ML4**	—	**BN160MR4**	—	—	—	225800	253300	113800	398
2.3	40300	2.8	623	45	—	**316MR4**	**BN160MR4**	—	—	—	225600	253000	113500	400
2.4	38000	1.9	588	15.0	**314ML4**	—	**BN160MR4**	—	—	—	146200	175300	66800	374
2.4	38200	2.5	591	18.0	**315ML4**	—	**BN160MR4**	—	—	—	146300	175400	66900	386
2.5	36700	1.1	568	11.0	**311ML4**	—	**BN160MR4**	—	—	—	108000	110200	47700	350
2.5	37200	1.8	575	15.0	**314ML4**	—	**BN160MR4**	—	—	—	145700	174700	66300	374
2.6	36400	1.5	564	11.0	**313ML4**	—	**BN160MR4**	—	—	—	156300	183200	58500	362
2.7	34500	1.4	535	22.0	—	**313MR4**	**BN160MR4**	—	—	—	155100	181800	57500	364
2.7	34100	1.9	528	22.0	—	**314MR4**	**BN160MR4**	—	—	—	143900	172600	64400	376
2.7	34500	2.7	533	18.0	**315ML4**	—	**BN160MR4**	—	—	—	144200	172900	64600	386
2.7	33900	2.8	525	40	—	**315MR4**	**BN160MR4**	—	—	—	143800	172500	64300	388
2.8	33100	1.4	512	11.0	**311ML4**	—	**BN160MR4**	—	—	—	106400	108600	46100	350
2.8	33600	1.2	520	22.0	—	**311MR4**	**BN160MR4**	—	—	—	106600	108800	46300	352
2.8	33200	1.4	514	11.0	**313ML4**	—	**BN160MR4**	—	—	—	154200	180700	56700	362
2.9	31700	1.0	490	22.0	—	**311MR4**	**BN160MR4**	—	—	—	105700	107900	45400	352
2.9	32100	1.5	496	22.0	—	**313MR4**	**BN160MR4**	—	—	—	153500	179800	56100	364
2.9	32000	2.4	495	15.0	**314ML4**	—	**BN160MR4**	—	—	—	142600	171000	63000	374
3.1	29600	2.5	458	15.0	**314ML4**	—	**BN160MR4**	—	—	—	141100	169200	61400	374
3.2	29300	1.0	453	11.0	**310ML4**	—	**BN160MR4**	—	—	—	83200	105500	44200	338
3.2	29200	2.0	452	11.0	**313ML4**	—	**BN160MR4**	—	—	—	151400	177500	54400	362
3.2	29100	1.6	450	22.0	—	**313MR4**	**BN160MR4**	—	—	—	151400	177400	54300	364
3.2	28700	2.1	445	22.0	—	**314MR4**	**BN160MR4**	—	—	—	140500	168400	60800	376
3.3	28300	1.4	438	22.0	—	**311MR4**	**BN160MR4**	—	—	—	104000	106200	43700	352

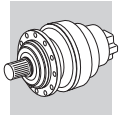

P_1 = 11 kW

n_2 min^{-1}	M_{n2} Nm	f_S	i	P_t kW					Rn_2 [N] MC	MZ	HC/PC	HZ/PZ	FZ	
3.4	27200	2.5	421	22.0	—	**314MR4**	**BN160MR4**	—	—	—	139300	167100	59700	376
3.5	26500	1.7	410	11.0	**311ML4**	—	**BN160MR4**	—	—	—	103100	105200	42800	350
3.5	26700	1.5	413	22.0	—	**311MR4**	**BN160MR4**	—	—	—	103200	105300	42900	352
3.7	25500	2.2	394	11.0	**313ML4**	—	**BN160MR4**	—	—	—	148500	174000	51900	362
3.7	25000	1.8	387	22.0	—	**313MR4**	**BN160MR4**	—	—	—	148100	173600	51600	364
3.7	25500	2.9	394	15.0	**314ML4**	—	**BN160MR4**	—	—	—	138000	165600	58400	374
3.8	24700	1.0	383	15.0	—	**310MR4**	**BN160MR4**	—	—	—	81200	103000	41800	340
4.1	22600	0.9	349	7.5	**309L4**	—	**BN160MR4**	—	—	—	70900	91300	22400	326
4.1	22500	2.0	348	11.0	**311ML4**	—	**BN160MR4**	—	—	—	100700	102700	40500	350
4.1	22900	2.6	354	22.0	—	**314MR4**	**BN160MR4**	—	—	—	136000	163100	56400	376
4.2	22400	1.3	347	15.0	—	**310MR4**	**BN160MR4**	—	—	—	80100	101600	40400	340
4.2	22100	1.7	341	22.0	—	**311MR4**	**BN160MR4**	—	—	—	100400	102500	40200	352
4.2	22300	2.5	346	22.0	—	**313MR4**	**BN160MR4**	—	—	—	145700	170800	49700	364
4.7	19700	1.2	305	15.0	—	**310MR4**	**BN160MR4**	—	—	—	78600	99700	38700	340
4.7	20200	1.5	304	18.0	**313ML3**	—	**BN160MR4**	—	—	—	143100	167700	47600	362
4.7	20000	2.2	309	22.0	—	**313MR4**	**BN160MR4**	—	—	—	143400	168100	47900	364
4.9	19700	1.2	295	18.0	**310ML3**	—	**BN160MR4**	—	—	—	78300	99300	38300	338
4.9	19400	1.4	291	18.0	**311ML3**	—	**BN160MR4**	—	—	—	98200	100200	38200	350
4.9	19000	1.9	294	22.0	—	**311MR4**	**BN160MR4**	—	—	—	98300	100300	38300	352
5.1	18400	0.9	284	15.0	—	**309R4**	**BN160MR4**	—	—	—	69000	88800	21000	328
5.1	18200	2.6	281	22.0	—	**313MR4**	**BN160MR4**	—	—	—	142000	166400	46400	364
5.2	17900	1.6	276	15.0	—	**310MR4**	**BN160MR4**	—	—	—	78000	98900	37500	340
5.2	17900	2.6	276	22.0	—	**314MR4**	**BN160MR4**	—	—	—	132000	158300	51900	376
5.4	17200	2.6	266	22.0	—	**311MR4**	**BN160MR4**	—	—	—	98000	100000	37000	352
5.6	16700	1.0	258	15.0	—	**309R4**	**BN160MR4**	—	—	—	69000	88800	20300	328
5.6	16700	1.3	258	15.0	—	**310MR4**	**BN160MR4**	—	—	—	78000	98900	36700	340
5.7	16800	2.5	252	18.0	**313ML3**	—	**BN160MR4**	—	—	—	142000	166400	44800	362
5.8	16600	1.1	249	18.0	**310ML3**	—	**BN160MR4**	—	—	—	78000	98900	36200	338
5.9	16300	2.2	245	18.0	**311ML3**	—	**BN160MR4**	—	—	—	98000	100000	36000	350
6.0	16000	3.0	240	25.0	**314ML3**	—	**BN160MR4**	—	—	—	132000	158300	49500	374
6.1	15400	1.9	238	15.0	—	**310MR4**	**BN160MR4**	—	—	—	78000	98900	35700	340
6.1	15300	2.6	237	22.0	—	**313MR4**	**BN160MR4**	—	—	—	142000	166400	43800	364
6.1	15400	2.6	238	22.0	—	**314MR4**	**BN160MR4**	—	—	—	132000	158300	49400	376
6.2	15000	1.1	232	15.0	—	**309R4**	**BN160MR4**	—	—	—	69000	88800	19600	328
6.3	15300	1.3	230	18.0	**310ML3**	—	**BN160MR4**	—	—	—	78000	98900	35300	338
6.3	14800	2.6	229	22.0	—	**311MR4**	**BN160MR4**	—	—	—	98000	100000	35200	352
7.0	13300	1.1	206	15.0	—	**307R4**	**BN160MR4**	—	30000	37500	67500	88800	23500	316
7.0	13300	1.5	206	15.0	—	**309R4**	**BN160MR4**	—	—	—	69000	88800	18800	328
7.0	13300	1.7	206	15.0	—	**310MR4**	**BN160MR4**	—	—	—	78000	98900	34000	340
7.1	13400	1.2	202	11.0	**309L3**	—	**BN160MR4**	—	—	—	69000	88800	18700	326
7.1	13400	1.6	202	18.0	**310ML3**	—	**BN160MR4**	—	—	—	78000	98900	33800	338
7.1	13500	2.7	203	18.0	**311ML3**	—	**BN160MR4**	—	—	—	98000	100000	33800	350
7.2	13000	2.6	201	22.0	—	**313MR4**	**BN160MR4**	—	—	—	142000	166400	41500	364
7.3	12800	2.6	198	22.0	—	**311MR4**	**BN160MR4**	—	—	—	98000	100000	33600	352
7.5	12700	2.5	191	18.0	**311ML3**	—	**BN160MR4**	—	—	—	98000	100000	33200	350
7.6	12300	1.1	191	15.0	—	**307R4**	**BN160MR4**	—	30000	37500	67500	88800	22900	316
7.6	12300	1.4	191	15.0	—	**309R4**	**BN160MR4**	—	—	—	69000	88800	18300	328
7.6	12200	2.3	189	15.0	—	**310MR4**	**BN160MR4**	—	—	—	78000	98900	33100	340
7.6	12200	2.6	189	22.0	—	**314MR4**	**BN160MR4**	—	—	—	132000	158300	45800	376
7.8	11900	2.6	185	22.0	—	**313MR4**	**BN160MR4**	—	—	—	142000	166400	40300	364
7.9	12200	1.2	183	11.0	**309L3**	—	**BN160MR4**	—	—	—	69000	88800	18100	326
7.9	11800	2.6	182	22.0	—	**311MR4**	**BN160MR4**	—	—	—	98000	100000	32600	352
7.9	12100	2.5	182	18.0	**313ML3**	—	**BN160MR4**	—	—	—	142000	166400	40100	362
8.1	11800	1.0	177	11.0	**307L3**	—	**BN160MR4**	—	30000	37500	67500	88800	22400	314
8.1	11800	1.5	177	18.0	**310ML3**	—	**BN160MR4**	—	—	—	78000	98900	32300	338
8.7	10700	1.0	165	15.0	—	**307R4**	**BN160MR4**	—	30000	37500	67500	88800	21900	316
8.7	10700	1.5	165	15.0	—	**309R4**	**BN160MR4**	—	—	—	69000	88800	17500	328
8.8	10900	2.4	164	18.0	**310ML3**	—	**BN160MR4**	—	—	—	78000	98900	31500	338
8.9	10800	1.0	162	11.0	**307L3**	—	**BN160MR4**	—	30000	37500	67500	88800	21700	314
8.9	10800	1.5	162	11.0	**309L3**	—	**BN160MR4**	—	—	—	69000	88800	17400	326
9.0	10400	2.5	160	15.0	—	**310MR4**	**BN160MR4**	—	—	—	78000	98900	31300	340
9.0	10400	2.6	160	22.0	—	**314MR4**	**BN160MR4**	—	—	—	132000	158300	43300	376
9.1	10200	0.9	158	12.0	—	**306R4**	**BN160MR4**	—	25000	28500	57000	65800	16800	304
9.3	9980	2.6	154	22.0	—	**311MR4**	**BN160MR4**	—	—	—	98000	100000	30900	352
9.4	10200	3.0	153	40	—	**313MR3**	**BN160MR4**	—	—	—	142000	166400	37900	364

A

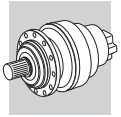

A

P_1 = 11 kW

n_2 min^{-1}	M_{n2} Nm	f_S	i	P_t kW					Rn_2 [N] MC	MZ	HC/PC	HZ/PZ	FZ	
9.5	9820	1.4	152	15.0	—	**307R4**	**BN160MR4**	—	30000	37500	67500	88800	21300	316
9.5	9820	1.9	152	15.0	—	**309R4**	**BN160MR4**	—	—	—	69000	88800	17000	328
9.6	9950	2.2	149	18.0	**310ML3**	—	**BN160MR4**	—	—	—	78000	98900	30500	338
9.8	9750	1.4	146	11.0	**307L3**	—	**BN160MR4**	—	30000	37500	67500	88800	21000	314
9.8	9770	2.8	147	40	—	**311MR3**	**BN160MR4**	—	—	—	98000	100000	30400	352
10.4	9250	1.2	139	11.0	**307L3**	—	**BN160MR4**	—	29600	37000	66800	87800	20600	314
10.4	9250	1.7	139	11.0	**309L3**	—	**BN160MR4**	—	—	—	68200	87800	16500	326
10.6	9010	2.9	135	18.0	**310ML3**	—	**BN160MR4**	—	—	—	76600	97100	29500	338
10.6	8780	2.6	136	15.0	—	**310MR4**	**BN160MR4**	—	—	—	76700	97200	29600	340
11.4	8390	1.6	126	11.0	**307L3**	—	**BN160MR4**	—	28700	35900	64800	85300	20000	314
11.4	8390	2.0	126	11.0	**309L3**	—	**BN160MR4**	—	—	—	66300	85300	16000	326
11.9	8080	1.0	121	7.5	**306L3**	—	**BN160MR4**	—	23600	26900	54100	62500	15300	302
12.0	7980	1.1	120	22.0	—	**307R3**	**BN160MR4**	—	28200	35300	63900	84000	19600	316
12.0	7980	1.6	120	22.0	—	**309R3**	**BN160MR4**	—	—	—	65300	84000	15700	328
12.0	7980	2.2	120	22.0	—	**310MR3**	**BN160MR4**	—	—	—	73800	93600	28400	340
12.1	7930	2.7	119	18.0	**310ML3**	—	**BN160MR4**	—	—	—	73700	93400	28300	338
12.7	7550	1.4	113	11.0	**307L3**	—	**BN160MR4**	—	27700	34600	62800	82600	19300	314
12.7	7550	2.1	113	11.0	**309L3**	—	**BN160MR4**	—	—	—	64200	82600	15400	326
12.8	7480	1.0	112	7.5	**306L3**	—	**BN160MR4**	—	23000	26200	52900	61100	15000	302
13.8	6940	1.3	104	7.5	**306L3**	—	**BN160MR4**	—	22400	25600	51700	59700	14600	302
14.4	6680	1.9	100	11.0	**307L3**	—	**BN160MR4**	—	26600	33200	60600	79700	18500	314
14.4	6680	2.5	100	11.0	**309L3**	—	**BN160MR4**	—	—	—	61900	79700	14800	326
14.5	6600	1.3	99.0	22.0	—	**307R3**	**BN160MR4**	—	26500	33100	60300	79400	18400	316
14.5	6600	1.9	99.0	22.0	—	**309R3**	**BN160MR4**	—	—	—	61700	79400	14700	328
14.5	6600	2.5	99.0	22.0	—	**310MR3**	**BN160MR4**	—	—	—	69700	88400	26600	340
14.6	6560	1.0	98.5	14.0	—	**306R3**	**BN160MR4**	—	22000	25100	50900	58700	14300	304
15.5	6200	2.0	93.0	11.0	**307L3**	—	**BN160MR4**	—	25900	32400	59200	77900	18100	314
15.5	6200	2.5	93.0	11.0	**309L3**	—	**BN160MR4**	—	—	—	60500	77900	14400	326
16.3	5880	1.5	88.3	7.5	**306L3**	—	**BN160MR4**	—	21200	24200	49200	56800	13800	302
17.0	5650	1.3	84.7	14.0	—	**306R3**	**BN160MR4**	—	20900	23900	48600	56100	13600	304
17.3	5560	1.8	83.4	22.0	—	**307R3**	**BN160MR4**	—	25000	31300	57300	75400	17400	316
17.3	5560	2.5	83.4	22.0	—	**309R3**	**BN160MR4**	—	—	—	58600	75400	13900	328
17.3	5560	2.6	83.4	22.0	—	**310MR3**	**BN160MR4**	—	—	—	66200	84000	25100	340
17.6	5450	1.3	81.9	7.5	**306L3**	—	**BN160MR4**	—	20700	23600	48100	55500	13500	302
17.9	5370	1.9	80.6	11.0	**307L3**	—	**BN160MR4**	—	24700	30900	56700	74600	17200	314
17.9	5370	2.8	80.6	11.0	**309L3**	—	**BN160MR4**	—	—	—	58000	74600	13800	326
18.3	5240	2.1	78.6	22.0	—	**307R3**	**BN160MR4**	—	24500	30600	56300	74100	17100	316
18.3	5240	2.6	78.6	22.0	—	**310MR3**	**BN160MR4**	—	—	—	65100	82500	24700	340
18.6	5150	0.9	77.2	7.5	**305L3**	—	**BN160MR4**	—	17100	19500	33600	39800	9050	290
18.7	5130	1.6	77.0	7.5	**306L3**	—	**BN160MR4**	—	20300	23100	47200	54500	13200	302
19.4	4940	2.4	74.1	11.0	**307L3**	—	**BN160MR4**	—	24000	30100	55300	72800	16700	314
19.8	4860	1.5	72.9	14.0	—	**306R3**	**BN160MR4**	—	19900	22700	46500	53600	12900	304
19.9	4980	1.1	72.5	13.0	**306L2**	—	**BN160MR4**	**M4LC4**	19900	22700	46400	53600	12900	302
20.1	4780	2.1	71.8	22.0	—	**307R3**	**BN160MR4**	—	23800	29700	54800	72100	16600	316
20.1	4780	2.7	71.8	22.0	—	**309R3**	**BN160MR4**	—	—	—	56000	72100	13200	328
20.1	4780	2.6	71.8	22.0	—	**310MR3**	**BN160MR4**	—	—	—	63300	80200	23900	340
21.3	4500	1.6	67.5	14.0	—	**306R3**	**BN160MR4**	—	19400	22100	45400	52400	12600	304
22.1	4350	1.7	65.2	7.5	**306L3**	—	**BN160MR4**	—	19200	21900	44900	51900	12500	302
22.2	4330	2.6	65.0	22.0	—	**307R3**	**BN160MR4**	—	23000	28800	53200	69900	16000	316
22.2	4330	2.6	65.0	22.0	—	**309R3**	**BN160MR4**	—	—	—	54400	69900	12800	328
22.2	4330	2.6	65.0	22.0	—	**310MR3**	**BN160MR4**	—	—	—	61400	77900	23100	340
22.8	4200	1.1	63.1	7.5	**305L3**	—	**BN160MR4**	—	15900	18200	31600	37500	8460	290
23.8	4030	2.8	60.5	11.0	**307L3**	—	**BN160MR4**	—	22500	28100	52000	68500	15600	314
24.8	3870	2.0	58.1	14.0	—	**306R3**	**BN160MR4**	—	18500	21100	43400	50100	12000	304
25.6	3860	1.4	56.3	13.0	**306L2**	—	**BN160MR4**	**M4LC4**	18300	20800	43000	49600	11900	302
25.8	3830	0.9	55.8	9.0	**305L2**	—	**BN160MR4**	—	15300	17500	30500	36100	8120	290
25.8	3720	2.7	55.9	22.0	—	**307R3**	**BN160MR4**	—	21900	27400	50800	66900	15200	316
25.8	3720	2.7	55.9	22.0	—	**309R3**	**BN160MR4**	—	—	—	51900	66900	12200	328
25.8	3720	2.6	55.9	22.0	—	**310MR3**	**BN160MR4**	—	—	—	58700	74500	22000	340
27.0	3560	0.9	53.4	7.5	**304L3**	—	**BN160MR4**	—	15100	17200	30100	35600	8000	278
27.0	3560	1.1	53.4	7.5	**305L3**	—	**BN160MR4**	—	15100	17200	30100	35600	8000	290
27.0	3550	2.0	53.2	7.5	**306L3**	—	**BN160MR4**	—	17900	20500	42300	48800	11700	302
31	3190	2.0	46.5	13.0	**306L2**	—	**BN160MR4**	**M4LC4**	17200	19600	40600	46900	11100	302
31	3080	2.5	46.3	14.0	—	**306R3**	**BN160MR4**	—	17100	19500	40600	46800	11100	304
31	3210	2.6	46.7	18.0	**307L2**	—	**BN160MR4**	**M4LC4**	20600	25800	48200	63400	14400	314

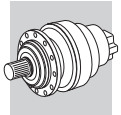

P_1 = 11 kW

n_2 min^{-1}	M_{n2} Nm	f_S	i	P_t kW					Rn_2 [N] MC	MZ	HC/PC	HZ/PZ	FZ	
32	3070	1.2	44.6	9.0	**305L2**	**—**	**BN160MR4**	**—**	14200	16200	28500	33800	7540	290
32	2970	2.7	44.6	22.0	**—**	**307R3**	**BN160MR4**	**—**	20300	25400	47500	62500	14100	316
32	2970	2.7	44.6	22.0	**—**	**309R3**	**BN160MR4**	**—**	—	—	48500	62500	11300	328
32	2970	2.6	44.6	22.0	**—**	**310MR3**	**BN160MR4**	**—**	—	—	54900	69600	20400	340
33	2900	1.1	43.6	7.5	**304L3**	**—**	**BN160MR4**	**—**	14100	16100	28300	33500	7480	278
37	2640	2.4	38.4	13.0	**306L2**	**—**	**BN160MR4**	**M4LC4**	16100	18400	38400	44300	10500	302
37	2610	2.5	39.2	14.0	**—**	**306R3**	**BN160MR4**	**—**	16200	18500	38600	44500	10500	304
38	2640	1.1	38.4	9.0	**304L2**	**—**	**BN160MR4**	**—**	13500	15400	27200	32300	7170	278
38	2640	1.6	38.4	9.0	**305L2**	**—**	**BN160MR4**	**—**	13500	15400	27200	32300	7170	290
38	2510	2.7	37.7	22.0	**—**	**307R3**	**BN160MR4**	**—**	19200	24000	45200	59400	13400	316
38	2510	2.7	37.7	22.0	**—**	**309R3**	**BN160MR4**	**—**	—	—	46200	59400	10700	328
38	2510	2.6	37.7	22.0	**—**	**310MR3**	**BN160MR4**	**—**	—	—	52200	66200	19300	340
40	2460	1.4	35.8	9.0	**305L2**	**—**	**BN160MR4**	**—**	13200	15100	26700	31600	7000	290
43	2210	2.6	33.2	14.0	**—**	**306R3**	**BN160MR4**	**—**	15300	17500	36700	42400	9960	304
46	2110	2.7	31.6	22.0	**—**	**307R3**	**BN160MR4**	**—**	18100	22600	42800	56400	12600	316
46	2110	2.7	31.6	22.0	**—**	**309R3**	**BN160MR4**	**—**	—	—	43800	56400	10100	328
47	2110	1.0	30.8	9.0	**303L2**	**—**	**BN160MR4**	**—**	12600	14300	25500	30200	6660	266
47	2110	1.3	30.8	9.0	**304L2**	**—**	**BN160MR4**	**—**	12600	14300	25500	30200	6660	278
47	2110	2.0	30.8	9.0	**305L2**	**—**	**BN160MR4**	**—**	12600	14300	25500	30200	6660	290
54	1820	1.0	26.4	9.0	**303L2**	**—**	**BN160MR4**	**—**	11900	13600	24400	28900	6330	266
54	1820	1.9	26.4	9.0	**305L2**	**—**	**BN160MR4**	**—**	11900	13600	24400	28900	6330	290
59	1680	1.3	24.5	9.0	**303L2**	**—**	**BN160MR4**	**—**	11600	13300	23800	28200	6170	266
59	1680	1.9	24.5	9.0	**304L2**	**—**	**BN160MR4**	**—**	11600	13300	23800	28200	6170	278
59	1680	2.3	24.5	9.0	**305L2**	**—**	**BN160MR4**	**—**	11600	13300	23800	28200	6170	290
63	1560	1.3	22.7	9.0	**303L2**	**—**	**BN160MR4**	**—**	11400	13000	23300	27600	6020	266
63	1560	1.8	22.7	9.0	**304L2**	**—**	**BN160MR4**	**—**	11400	13000	23300	27600	6020	278
63	1560	2.6	22.7	9.0	**305L2**	**—**	**BN160MR4**	**—**	11400	13000	23300	27600	6020	290
69	1430	1.3	20.8	9.0	**303L2**	**—**	**BN160MR4**	**—**	11000	12600	22700	26900	5840	266
69	1430	2.1	20.8	9.0	**304L2**	**—**	**BN160MR4**	**—**	11000	12600	22700	26900	5840	278
69	1430	2.3	20.8	9.0	**305L2**	**—**	**BN160MR4**	**—**	11000	12600	22700	26900	5840	290
75	1320	2.7	19.2	18.0	**—**	**306R2**	**BN160MR4**	**—**	12800	14600	31200	36000	8300	304
79	1240	1.6	18.1	9.0	**303L2**	**—**	**BN160MR4**	**—**	10500	12000	21700	25800	5580	266
79	1240	2.4	18.1	9.0	**304L2**	**—**	**BN160MR4**	**—**	10500	12000	21700	25800	5580	278
79	1240	2.9	18.1	9.0	**305L2**	**—**	**BN160MR4**	**—**	10500	12000	21700	25800	5580	290
91	1090	2.7	15.9	18.0	**—**	**306R2**	**BN160MR4**	**—**	12000	13700	29400	34000	7790	304
94	1050	1.6	15.3	9.0	**303L2**	**—**	**BN160MR4**	**—**	9960	11400	20700	24500	5280	266
94	1050	2.7	15.3	9.0	**304L2**	**—**	**BN160MR4**	**—**	9960	11400	20700	24500	5280	278
94	1050	2.9	15.3	9.0	**305L2**	**—**	**BN160MR4**	**—**	9960	11400	20700	24500	5280	290
105	940	2.7	13.7	18.0	**—**	**306R2**	**BN160MR4**	**—**	11400	13000	28100	32500	7410	304
115	860	1.9	12.5	9.0	**303L2**	**—**	**BN160MR4**	**—**	9310	10600	19500	23100	4940	266
132	750	2.7	10.9	18.0	**—**	**306R2**	**BN160MR4**	**—**	10600	12100	26300	30300	6870	304
149	680	1.1	9.67	11.0	**303L1**	**—**	**BN160MR4**	**M4LC4**	8530	9750	18000	21300	4530	266
156	630	2.7	9.23	18.0	**—**	**306R2**	**BN160MR4**	**—**	10000	11400	25000	28900	6500	304
192	530	2.3	7.50	11.0	**303L1**	**—**	**BN160MR4**	**M4LC4**	7840	8960	16700	19800	4160	266

P_1 = 15 kW

n_2 min^{-1}	M_{n2} Nm	f_S	i	P_t kW					Rn_2 [N] MC	MZ	HC/PC	HZ/PZ	FZ	
0.77	164200	0.9	1893	18.0	**317ML4**	**—**	**BN160L4**	**—**	—	—	410500	436100	150000	408
0.92	138400	1.1	1595	18.0	**317ML4**	**—**	**BN160L4**	**—**	—	—	400600	425500	150000	408
0.94	134700	0.9	1553	18.0	**316ML4**	**—**	**BN160L4**	**—**	—	—	256500	287700	150000	398
1.1	113500	1.1	1308	18.0	**316ML4**	**—**	**BN160L4**	**—**	—	—	250300	280700	144600	398
1.1	114400	1.4	1318	18.0	**317ML4**	**—**	**BN160L4**	**—**	—	—	389800	414100	145000	408
1.2	107400	1.1	1237	18.0	**316ML4**	**—**	**BN160L4**	**—**	—	—	248300	278500	142000	398
1.3	95800	0.9	1104	18.0	**315ML4**	**—**	**BN160L4**	**—**	—	—	159600	191400	82000	386
1.3	95800	1.2	1104	18.0	**316ML4**	**—**	**BN160L4**	**—**	—	—	244300	274000	136700	398
1.3	98400	1.6	1134	18.0	**317ML4**	**—**	**BN160L4**	**—**	—	—	381500	405300	137900	408
1.4	90500	1.1	1043	18.0	**315ML4**	**—**	**BN160L4**	**—**	—	—	158300	189900	80400	386
1.4	88500	1.3	1020	18.0	**316ML4**	**—**	**BN160L4**	**—**	—	—	241500	270900	133100	398
1.4	89600	2.0	1032	18.0	**317ML4**	**—**	**BN160L4**	**—**	—	—	376400	399900	133600	408
1.5	82700	1.7	953	50	**—**	**317MR4**	**BN160L4**	**—**	—	—	372200	395400	130100	410

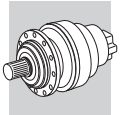

A

P_1 = 15 kW

n_2 min^{-1}	M_{n2} Nm	f_S	i	P_t kW					Rn_2 [N] MC	MZ	HC/PC	HZ/PZ	FZ	
1.6	80700	1.1	930	18.0	**315ML4**	—	**BN160L4**	—	—	—	155800	186800	77500	386
1.6	78900	0.9	909	40	—	**315MR4**	**BN160L4**	—	—	—	155300	186200	76900	388
1.6	78400	2.0	904	18.0	**317ML4**	—	**BN160L4**	—	—	—	369300	392400	127800	408
1.7	74400	1.0	858	15.0	**314ML4**	—	**BN160L4**	—	—	—	154000	184600	75400	374
1.7	74800	1.3	862	18.0	**315ML4**	—	**BN160L4**	—	—	—	154100	184800	75500	386
1.7	76300	1.5	880	18.0	**316ML4**	—	**BN160L4**	—	—	—	236500	265300	126700	398
1.8	68700	2.8	792	18.0	**317ML4**	—	**BN160L4**	—	—	—	362500	385100	122300	408
1.8	69700	2.2	803	50	—	**317MR4**	**BN160L4**	—	—	—	363200	385800	122900	410
1.9	67900	1.3	782	40	—	**315MR4**	**BN160L4**	—	—	—	152000	182200	73100	388
1.9	68000	1.7	784	18.0	**316ML4**	—	**BN160L4**	—	—	—	232600	260900	121900	398
1.9	67900	1.7	782	45	—	**316MR4**	**BN160L4**	—	—	—	232500	260900	121800	400
2.0	64000	1.2	738	15.0	**314ML4**	—	**BN160L4**	—	—	—	150700	180700	71700	374
2.0	64300	1.5	741	18.0	**315ML4**	—	**BN160L4**	—	—	—	150800	180800	71800	386
2.0	62400	2.7	719	18.0	**317ML4**	—	**BN160L4**	—	—	—	357500	379800	118500	408
2.1	61300	1.9	706	18.0	**316ML4**	—	**BN160L4**	—	—	—	229200	257100	117800	398
2.2	58000	1.3	668	15.0	**314ML4**	—	**BN160L4**	—	—	—	148600	178200	69400	374
2.2	58300	1.6	672	18.0	**315ML4**	—	**BN160L4**	—	—	—	148700	178300	69500	386
2.2	57200	1.5	659	40	—	**315MR4**	**BN160L4**	—	—	—	148300	177800	69000	388
2.2	57200	2.0	659	45	—	**316MR4**	**BN160L4**	—	—	—	226900	254500	115100	400
2.2	58700	2.7	677	50	—	**317MR4**	**BN160L4**	—	—	—	354400	376500	116100	410
2.3	54100	1.8	623	40	—	**315MR4**	**BN160L4**	—	—	—	147100	176400	67800	388
2.3	54500	2.1	628	18.0	**316ML4**	—	**BN160L4**	—	—	—	225400	252800	113200	398
2.3	54100	2.1	623	45	—	**316MR4**	**BN160L4**	—	—	—	225100	252500	112900	400
2.3	54300	2.2	626	50	—	**317MR4**	**BN160L4**	—	—	—	350500	372300	113100	410
2.4	53200	1.0	614	22.0	—	**314MR4**	**BN160L4**	—	—	—	146800	176000	67400	376
2.5	49900	1.4	575	15.0	**314ML4**	—	**BN160L4**	—	—	—	145400	174400	66000	374
2.5	51000	1.4	588	15.0	**314ML4**	—	**BN160L4**	—	—	—	145900	174900	66500	374
2.5	51300	1.8	591	18.0	**315ML4**	—	**BN160L4**	—	—	—	146000	175100	66600	386
2.6	48900	1.1	564	11.0	**313ML4**	—	**BN160L4**	—	—	—	156000	182800	58300	362
2.6	48800	2.3	563	18.0	**316ML4**	—	**BN160L4**	—	—	—	221900	248900	109200	398
2.7	46400	1.0	535	22.0	—	**313MR4**	**BN160L4**	—	—	—	154800	181400	57200	364
2.7	46300	2.0	533	18.0	**315ML4**	—	**BN160L4**	—	—	—	143900	172500	64300	386
2.8	44600	1.1	514	11.0	**313ML4**	—	**BN160L4**	—	—	—	153900	180400	56500	362
2.8	45800	1.4	528	22.0	—	**314MR4**	**BN160L4**	—	—	—	143700	172300	64100	376
2.8	45600	2.1	525	40	—	**315MR4**	**BN160L4**	—	—	—	143500	172100	64000	388
2.8	45600	2.8	525	45	—	**316MR4**	**BN160L4**	—	—	—	219700	246400	106700	400
2.9	44400	1.0	512	11.0	**311ML4**	—	**BN160L4**	—	—	—	106200	108400	45800	350
2.9	43000	1.1	496	22.0	—	**313MR4**	**BN160L4**	—	—	—	153200	179500	55800	364
2.9	43400	2.9	500	18.0	**316ML4**	—	**BN160L4**	—	—	—	218200	244700	105000	398
3.0	42900	1.8	495	15.0	**314ML4**	—	**BN160L4**	—	—	—	142300	170700	62700	374
3.0	42200	2.2	487	18.0	**315ML4**	—	**BN160L4**	—	—	—	142000	170300	62400	386
3.2	39200	1.5	452	11.0	**313ML4**	—	**BN160L4**	—	—	—	151100	177100	54100	362
3.2	39100	1.2	450	22.0	—	**313MR4**	**BN160L4**	—	—	—	151100	177000	54100	364
3.2	39700	1.9	458	15.0	**314ML4**	—	**BN160L4**	—	—	—	140800	168800	61200	374
3.3	38000	1.0	438	22.0	—	**311MR4**	**BN160L4**	—	—	—	103800	106000	43500	352
3.3	38600	1.5	445	22.0	—	**314MR4**	**BN160L4**	—	—	—	140200	168100	60600	376
3.3	38300	2.5	441	18.0	**315ML4**	—	**BN160L4**	—	—	—	140000	167900	60400	386
3.4	37300	2.8	430	45	—	**316MR4**	**BN160L4**	—	—	—	213500	239500	99800	400
3.5	35800	1.1	413	22.0	—	**311MR4**	**BN160L4**	—	—	—	103000	105100	42700	352
3.5	36500	1.9	421	22.0	—	**314MR4**	**BN160L4**	—	—	—	139100	166800	59400	376
3.6	35600	1.3	410	11.0	**311ML4**	—	**BN160L4**	—	—	—	102900	105000	42600	350
3.6	35500	2.7	409	40	—	**315MR4**	**BN160L4**	—	—	—	138500	166100	58900	388
3.7	34200	1.7	394	11.0	**313ML4**	—	**BN160L4**	—	—	—	148200	173700	51700	362
3.7	34200	2.2	394	15.0	**314ML4**	—	**BN160L4**	—	—	—	137800	165200	58200	374
3.8	33600	1.3	387	22.0	—	**313MR4**	**BN160L4**	—	—	—	147900	173300	51400	364
4.0	32100	3.0	370	18.0	**315ML4**	—	**BN160L4**	—	—	—	136500	163700	56900	386
4.1	30800	1.9	354	22.0	—	**314MR4**	**BN160L4**	—	—	—	135700	162700	56100	376
4.2	30100	1.0	347	15.0	—	**310MR4**	**BN160L4**	—	—	—	79900	101400	40200	340
4.2	30200	1.5	348	11.0	**311ML4**	—	**BN160L4**	—	—	—	100500	102500	40300	350
4.2	30000	1.9	346	22.0	—	**313MR4**	**BN160L4**	—	—	—	145500	170500	49500	364
4.3	29600	1.3	341	22.0	—	**311MR4**	**BN160L4**	—	—	—	100200	102300	40000	352
4.6	27200	2.8	314	15.0	**314ML4**	—	**BN160L4**	—	—	—	133400	160000	53900	374
4.7	26800	1.6	309	22.0	—	**313MR4**	**BN160L4**	—	—	—	143100	167700	47700	364
4.8	27200	1.1	304	18.0	**313ML3**	—	**BN160L4**	—	—	—	142800	167300	47400	362
5.0	26000	1.1	291	18.0	**311ML3**	—	**BN160L4**	—	—	—	98000	100000	38000	350

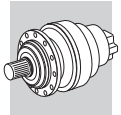

P_1 = 15 kW

n_2 min^{-1}	M_{n2} Nm	f_S	i	P_t kW					Rn_2 [N] MC	MZ	HC/PC	HZ/PZ	FZ	
5.0	25500	1.4	294	22.0	—	**311MR4**	**BN160L4**	—	—	—	98100	100100	38100	352
5.2	24400	1.9	281	22.0	—	**313MR4**	**BN160L4**	—	—	—	142000	166400	46200	364
5.3	24000	1.2	276	15.0	—	**310MR4**	**BN160L4**	—	—	—	78000	98900	37300	340
5.3	24000	1.9	276	22.0	—	**314MR4**	**BN160L4**	—	—	—	132000	158300	51700	376
5.5	23100	1.9	266	22.0	—	**311MR4**	**BN160L4**	—	—	—	98000	100000	36800	352
5.7	22400	1.0	258	15.0	—	**310MR4**	**BN160L4**	—	—	—	78000	98900	36500	340
5.8	22600	1.9	252	18.0	**313ML3**	—	**BN160L4**	—	—	—	142000	166400	44600	362
6.0	21900	1.7	245	18.0	**311ML3**	—	**BN160L4**	—	—	—	98000	100000	35900	350
6.1	20600	1.4	238	15.0	—	**310MR4**	**BN160L4**	—	—	—	78000	98900	35500	340
6.1	21400	2.2	240	25.0	**314ML3**	—	**BN160L4**	—	—	—	132000	158300	49300	374
6.1	20600	1.9	238	22.0	—	**314MR4**	**BN160L4**	—	—	—	132000	158300	49100	376
6.2	20600	1.9	237	22.0	—	**313MR4**	**BN160L4**	—	—	—	142000	166400	43600	364
6.3	20600	0.9	230	18.0	**310ML3**	—	**BN160L4**	—	—	—	78000	98900	35100	338
6.4	19800	1.9	229	22.0	—	**311MR4**	**BN160L4**	—	—	—	98000	100000	35000	352
7.0	18700	2.3	209	18.0	**313ML3**	—	**BN160L4**	—	—	—	142000	166400	41800	362
7.1	17800	1.1	206	15.0	—	**309R4**	**BN160L4**	—	—	—	69000	88800	18700	328
7.1	17900	1.2	206	15.0	—	**310MR4**	**BN160L4**	—	—	—	78000	98900	33800	340
7.2	18000	0.9	202	11.0	**309L3**	—	**BN160L4**	—	—	—	69000	88800	18600	326
7.2	18100	1.2	202	18.0	**310ML3**	—	**BN160L4**	—	—	—	78000	98900	33600	338
7.2	18100	2.0	203	18.0	**311ML3**	—	**BN160L4**	—	—	—	98000	100000	33700	350
7.3	17400	1.9	201	22.0	—	**313MR4**	**BN160L4**	—	—	—	142000	166400	41300	364
7.4	17200	1.9	198	22.0	—	**311MR4**	**BN160L4**	—	—	—	98000	100000	33400	352
7.5	17300	2.8	194	18.0	**313ML3**	—	**BN160L4**	—	—	—	142000	166400	40800	362
7.6	17100	1.9	191	18.0	**311ML3**	—	**BN160L4**	—	—	—	98000	100000	33000	350
7.7	16500	1.0	191	15.0	—	**309R4**	**BN160L4**	—	—	—	69000	88800	18300	328
7.7	16400	1.7	189	15.0	—	**310MR4**	**BN160L4**	—	—	—	78000	98900	32900	340
7.7	16400	1.9	189	22.0	—	**314MR4**	**BN160L4**	—	—	—	132000	158300	45600	376
7.9	16000	1.9	185	22.0	—	**313MR4**	**BN160L4**	—	—	—	142000	166400	40200	364
8.0	15800	1.9	182	22.0	—	**311MR4**	**BN160L4**	—	—	—	98000	100000	32500	352
8.0	16300	1.9	182	18.0	**313ML3**	—	**BN160L4**	—	—	—	142000	166400	40000	362
8.2	15900	1.1	177	18.0	**310ML3**	—	**BN160L4**	—	—	—	78000	98900	32200	338
8.3	15700	2.7	176	18.0	**313ML3**	—	**BN160L4**	—	—	—	142000	166400	39500	362
8.5	15300	2.3	171	18.0	**311ML3**	—	**BN160L4**	—	—	—	98000	100000	31800	350
8.8	14300	1.1	165	15.0	—	**309R4**	**BN160L4**	—	—	—	69000	88800	17400	328
8.9	14600	1.8	164	18.0	**310ML3**	—	**BN160L4**	—	—	—	78000	98900	31300	338
9.0	14400	1.1	162	11.0	**309L3**	—	**BN160L4**	—	—	—	69000	88800	17300	326
9.1	13900	1.9	160	15.0	—	**310MR4**	**BN160L4**	—	—	—	78000	98900	31100	340
9.1	14400	2.4	161	18.0	**311ML3**	—	**BN160L4**	—	—	—	98000	100000	31200	350
9.1	13900	1.9	160	22.0	—	**314MR4**	**BN160L4**	—	—	—	132000	158300	43100	376
9.5	13400	1.9	154	22.0	—	**311MR4**	**BN160L4**	—	—	—	98000	100000	30700	352
9.5	13700	2.2	153	40	—	**313MR3**	**BN160L4**	—	—	—	142000	166400	37700	364
9.6	13200	1.0	152	15.0	—	**307R4**	**BN160L4**	—	30000	37500	67500	88800	21200	316
9.6	13200	1.4	152	15.0	—	**309R4**	**BN160L4**	—	—	—	69000	88800	16900	328
9.8	13400	1.6	149	18.0	**310ML3**	—	**BN160L4**	—	—	—	78000	98900	30400	338
9.9	13100	2.7	147	18.0	**311ML3**	—	**BN160L4**	—	—	—	98000	100000	30200	350
10.0	13100	1.0	146	11.0	**307L3**	—	**BN160L4**	—	30000	37500	67500	88800	20900	314
10.0	13100	2.1	147	40	—	**311MR3**	**BN160L4**	—	—	—	98000	100000	30200	352
10.5	12400	1.3	139	11.0	**309L3**	—	**BN160L4**	—	—	—	68000	87500	16400	326
10.7	11800	1.9	136	15.0	—	**310MR4**	**BN160L4**	—	—	—	76300	96800	29500	340
10.8	12100	2.1	135	18.0	**310ML3**	—	**BN160L4**	—	—	—	76200	96700	29400	338
11.0	11900	2.9	133	18.0	**311ML3**	—	**BN160L4**	—	—	—	95300	100000	29300	350
11.6	11300	1.2	126	11.0	**307L3**	—	**BN160L4**	—	28600	35700	64600	84900	19900	314
11.6	11300	1.5	126	11.0	**309L3**	—	**BN160L4**	—	—	—	66000	84900	15900	326
12.2	10700	1.2	120	22.0	—	**309R3**	**BN160L4**	—	—	—	65000	83700	15600	328
12.2	10700	1.6	120	22.0	—	**310MR3**	**BN160L4**	—	—	—	73500	93200	28200	340
12.3	10600	2.0	119	18.0	**310ML3**	—	**BN160L4**	—	—	—	73400	93000	28200	338
12.9	10100	1.0	113	11.0	**307L3**	—	**BN160L4**	—	27600	34500	62600	82300	19200	314
12.9	10100	1.5	113	11.0	**309L3**	—	**BN160L4**	—	—	—	63900	82300	15400	326
13.5	9640	2.5	108	18.0	**310ML3**	—	**BN160L4**	—	—	—	71200	90300	27300	338
14.0	9320	1.0	104	7.5	**306L3**	—	**BN160L4**	—	22300	25500	51500	59500	14500	302
14.5	9020	2.3	101	18.0	**310ML3**	—	**BN160L4**	—	—	—	69800	88500	26700	338
14.6	8970	1.4	100	11.0	**307L3**	—	**BN160L4**	—	26500	33100	60300	79300	18400	314
14.6	8970	1.9	100	11.0	**309L3**	—	**BN160L4**	—	—	—	61700	79300	14700	326
14.7	8850	1.0	99.0	22.0	—	**307R3**	**BN160L4**	—	26400	32900	60100	79000	18300	316
14.7	8850	1.4	99.0	22.0	—	**309R3**	**BN160L4**	—	—	—	61400	79000	14700	328

A

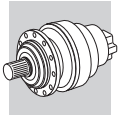

A

P_1 = 15 kW

n_2 min^{-1}	M_{n2} Nm	f_S	i	P_t kW					Rn_2 [N] MC	MZ	HC/PC	HZ/PZ	FZ	
14.7	8850	1.8	99.0	22.0	—	**310MR3**	**BN160L4**	—	—	—	69400	88000	26500	340
15.7	8320	1.5	93.0	11.0	**307L3**	—	**BN160L4**	—	25800	32300	59000	77600	18000	314
15.7	8320	1.8	93.0	11.0	**309L3**	—	**BN160L4**	—	—	—	60300	77600	14400	326
15.7	8290	2.8	92.7	18.0	**310ML3**	—	**BN160L4**	—	—	—	68100	86300	25900	338
16.5	7890	1.1	88.3	7.5	**306L3**	—	**BN160L4**	—	21100	24100	49000	56600	13700	302
17.2	7580	1.0	84.7	14.0	—	**306R3**	**BN160L4**	—	20900	23800	48400	55900	13600	304
17.5	7460	1.4	83.4	22.0	—	**307R3**	**BN160L4**	—	24900	31100	57100	75100	17300	316
17.5	7460	1.9	83.4	22.0	—	**309R3**	**BN160L4**	—	—	—	58300	75100	13900	328
17.5	7460	1.9	83.4	22.0	—	**310MR3**	**BN160L4**	—	—	—	65900	83600	25000	340
17.8	7320	0.9	81.9	7.5	**306L3**	—	**BN160L4**	—	20600	23500	47900	55300	13400	302
18.1	7210	1.4	80.6	11.0	**307L3**	—	**BN160L4**	—	24600	30800	56500	74300	17100	314
18.1	7210	2.1	80.6	11.0	**309L3**	—	**BN160L4**	—	—	—	57700	74300	13700	326
18.2	7180	2.9	80.3	18.0	**310ML3**	—	**BN160L4**	—	—	—	65200	82700	24700	338
18.6	7030	1.6	78.6	22.0	—	**307R3**	**BN160L4**	—	24400	30500	56100	73800	17000	316
18.6	7030	1.9	78.6	22.0	—	**310MR3**	**BN160L4**	—	—	—	64800	82100	24500	340
19.0	6890	1.2	77.0	7.5	**306L3**	—	**BN160L4**	—	20200	23000	47000	54300	13100	302
19.7	6630	1.8	74.1	11.0	**307L3**	—	**BN160L4**	—	23900	29900	55100	72500	16700	314
19.7	6630	2.3	74.1	11.0	**309L3**	—	**BN160L4**	—	—	—	56300	72500	13300	326
20.0	6520	1.1	72.9	14.0	—	**306R3**	**BN160L4**	—	19800	22600	46300	53400	12900	304
20.3	6420	1.6	71.8	22.0	—	**307R3**	**BN160L4**	—	23700	29600	54500	71800	16500	316
20.3	6420	2.0	71.8	22.0	—	**309R3**	**BN160L4**	—	—	—	55800	71800	13200	328
20.3	6420	1.9	71.8	22.0	—	**310MR3**	**BN160L4**	—	—	—	63000	79900	23800	340
21.6	6040	1.2	67.5	14.0	—	**306R3**	**BN160L4**	—	19300	22000	45200	52200	12600	304
22.4	5830	1.3	65.2	7.5	**306L3**	—	**BN160L4**	—	19100	21800	44800	51700	12400	302
22.5	5810	1.9	65.0	22.0	—	**307R3**	**BN160L4**	—	22900	28600	52900	69700	15900	316
22.5	5810	1.9	65.0	22.0	—	**309R3**	**BN160L4**	—	—	—	54100	69700	12800	328
22.5	5810	1.9	65.0	22.0	—	**310MR3**	**BN160L4**	—	—	—	61200	77600	23000	340
24.1	5410	2.1	60.5	11.0	**307L3**	—	**BN160L4**	—	22400	28000	51800	68200	15600	314
24.1	5410	2.6	60.5	11.0	**309L3**	—	**BN160L4**	—	—	—	53000	68200	12500	326
25.1	5200	1.5	58.1	14.0	—	**306R3**	**BN160L4**	—	18400	21000	43200	49900	11900	304
26.0	5190	1.0	56.3	13.0	**306L2**	—	**BN160L4**	**M5SB4**	18200	20700	42800	49400	11800	302
26.1	5000	2.0	55.9	22.0	—	**307R3**	**BN160L4**	—	21800	27200	50600	66600	15200	316
26.1	5000	2.0	55.9	22.0	—	**309R3**	**BN160L4**	—	—	—	51700	66600	12100	328
26.1	5000	1.9	55.9	22.0	—	**310MR3**	**BN160L4**	—	—	—	58500	74200	21900	340
27.4	4760	1.5	53.2	7.5	**306L3**	—	**BN160L4**	—	17900	20400	42100	48600	11600	302
28.5	4580	2.4	51.3	11.0	**307L3**	—	**BN160L4**	—	21200	26500	49300	64900	14700	314
28.5	4580	2.9	51.3	11.0	**309L3**	—	**BN160L4**	—	—	—	50400	64900	11800	326
31	4290	1.5	46.5	13.0	**306L2**	—	**BN160L4**	**M5SB4**	17100	19500	40400	46700	11100	302
31	4310	1.9	46.7	18.0	**307L2**	—	**BN160L4**	**M5SB4**	20500	25700	48000	63100	14300	314
31	4310	2.9	46.7	18.0	**309L2**	—	**BN160L4**	—	—	—	49000	63100	11400	326
32	4140	1.8	46.3	14.0	—	**306R3**	**BN160L4**	—	17000	19400	40400	46600	11100	304
33	3980	2.0	44.6	22.0	—	**307R3**	**BN160L4**	—	20200	25200	47300	62200	14100	316
33	3980	2.0	44.6	22.0	—	**309R3**	**BN160L4**	—	—	—	48300	62200	11200	328
33	3980	1.9	44.6	22.0	—	**310MR3**	**BN160L4**	—	—	—	54600	69300	20300	340
37	3510	1.9	39.2	14.0	—	**306R3**	**BN160L4**	—	16100	18400	38400	44400	10500	304
38	3540	1.2	38.4	9.0	**305L2**	—	**BN160L4**	—	13500	15400	27100	32200	7140	290
38	3540	1.8	38.4	13.0	**306L2**	—	**BN160L4**	**M5SB4**	16000	18300	38200	44100	10400	302
38	3560	2.3	38.6	18.0	**307L2**	—	**BN160L4**	**M5SB4**	19300	24100	45300	59600	13400	314
39	3380	2.0	37.7	22.0	—	**307R3**	**BN160L4**	—	19100	23900	45000	59200	13300	316
39	3380	2.0	37.7	22.0	—	**309R3**	**BN160L4**	—	—	—	46000	59200	10600	328
39	3380	1.9	37.7	22.0	—	**310MR3**	**BN160L4**	—	—	—	52000	65900	19200	340
41	3300	1.1	35.8	9.0	**305L2**	—	**BN160L4**	—	13100	15000	26600	31500	6970	290
44	3050	2.3	33.1	13.0	**306L2**	—	**BN160L4**	**M5SB4**	15200	17400	36500	42100	9900	302
44	2970	2.0	33.2	14.0	—	**306R3**	**BN160L4**	—	15300	17400	36600	42200	9920	304
46	2830	2.0	31.6	22.0	—	**307R3**	**BN160L4**	—	18000	22500	42700	56100	12500	316
46	2830	2.0	31.6	22.0	—	**309R3**	**BN160L4**	—	—	—	43600	56100	10000	328
47	2840	1.0	30.8	9.0	**304L2**	—	**BN160L4**	—	12500	14300	25400	30100	6630	278
47	2840	1.5	30.8	9.0	**305L2**	—	**BN160L4**	—	12500	14300	25400	30100	6630	290
51	2620	2.6	28.4	13.0	**306L2**	—	**BN160L4**	**M5SB4**	14500	16500	34900	40300	9420	302
55	2440	1.5	26.4	9.0	**305L2**	—	**BN160L4**	—	11900	13600	24300	28700	6300	290
55	2430	2.6	26.4	13.0	**306L2**	—	**BN160L4**	**M5SB4**	14100	16100	34100	39400	9180	302
60	2260	1.0	24.5	9.0	**303L2**	—	**BN160L4**	—	11600	13200	23700	28100	6150	266
60	2260	1.4	24.5	9.0	**304L2**	—	**BN160L4**	—	11600	13200	23700	28100	6150	278
60	2260	1.7	24.5	9.0	**305L2**	—	**BN160L4**	—	11600	13200	23700	28100	6150	290
64	2100	1.0	22.7	9.0	**303L2**	—	**BN160L4**	—	11300	12900	23200	27500	5990	266

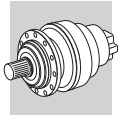

P_1 = 15 kW

n_2 min^{-1}	M_{n2} Nm	f_S	i	P_t kW					Rn_2 [N] MC	MZ	HC/PC	HZ/PZ	FZ	
64	2100	1.3	22.7	9.0	**304L2**	**—**	**BN160L4**	**—**	11300	12900	23200	27500	5990	278
64	2100	1.9	22.7	9.0	**305L2**	**—**	**BN160L4**	**—**	11300	12900	23200	27500	5990	290
64	2090	3.0	22.7	13.0	**306L2**	**—**	**BN160L4**	**M5SB4**	13400	15300	32600	37600	8730	302
70	1920	1.0	20.8	9.0	**303L2**	**—**	**BN160L4**	**—**	11000	12500	22600	26700	5820	266
70	1920	1.6	20.8	9.0	**304L2**	**—**	**BN160L4**	**—**	11000	12500	22600	26700	5820	278
70	1920	1.7	20.8	9.0	**305L2**	**—**	**BN160L4**	**—**	11000	12500	22600	26700	5820	290
76	1770	2.0	19.2	18.0	**—**	**306R2**	**BN160L4**	**—**	12700	14500	31000	35800	8260	304
81	1670	1.2	18.1	9.0	**303L2**	**—**	**BN160L4**	**—**	10500	12000	21700	25700	5560	266
81	1670	1.8	18.1	9.0	**304L2**	**—**	**BN160L4**	**—**	10500	12000	21700	25700	5560	278
81	1670	2.2	18.1	9.0	**305L2**	**—**	**BN160L4**	**—**	10500	12000	21700	25700	5560	290
92	1460	2.0	15.9	18.0	**—**	**306R2**	**BN160L4**	**—**	11900	13600	29300	33800	7760	304
95	1420	1.2	15.3	9.0	**303L2**	**—**	**BN160L4**	**—**	9910	11300	20600	24400	5260	266
95	1420	2.0	15.3	9.0	**304L2**	**—**	**BN160L4**	**—**	9910	11300	20600	24400	5260	278
95	1420	2.2	15.3	9.0	**305L2**	**—**	**BN160L4**	**—**	9910	11300	20600	24400	5260	290
107	1260	2.0	13.7	18.0	**—**	**306R2**	**BN160L4**	**—**	11400	12900	28000	32300	7380	304
117	1160	1.4	12.5	9.0	**303L2**	**—**	**BN160L4**	**—**	9260	10600	19400	23000	4910	266
117	1160	2.3	12.5	9.0	**304L2**	**—**	**BN160L4**	**—**	9260	10600	19400	23000	4910	278
117	1160	2.6	12.5	9.0	**305L2**	**—**	**BN160L4**	**—**	9260	10600	19400	23000	4910	290
134	1000	2.0	10.9	18.0	**—**	**306R2**	**BN160L4**	**—**	10500	12000	26200	30200	6840	304
158	850	2.0	9.23	18.0	**—**	**306R2**	**BN160L4**	**—**	9960	11400	24900	28700	6470	304
195	710	1.7	7.50	11.0	**303L1**	**—**	**BN160L4**	**M5SB4**	7810	8920	16600	19700	4140	266
235	590	2.4	6.20	11.0	**303L1**	**—**	**BN160L4**	**M5SB4**	7330	8370	15700	18600	3890	266
274	510	3.0	5.33	11.0	**303L1**	**—**	**BN160L4**	**M5SB4**	6970	7960	15000	17800	3700	266

P_1 = 18.5 kW

n_2 min^{-1}	M_{n2} Nm	f_S	i	P_t kW					Rn_2 [N] MC	MZ	HC/PC	HZ/PZ	FZ	
0.92	170800	0.9	1595	18.0	**317ML4**	**—**	**BN180M4**	**M5LA4**	—	—	400600	425500	150000	408
1.1	141200	1.1	1318	18.0	**317ML4**	**—**	**BN180M4**	**M5LA4**	—	—	389800	414100	145000	408
1.1	148800	2.2	1389	30.0	**319L4**	**—**	**BN180M4**	**M5LA4**	—	—	454000	499800	196700	428
1.2	128000	2.7	1195	30.0	**319L4**	**—**	**BN180M4**	**M5LA4**	—	—	444300	489200	187100	428
1.3	118300	1.0	1104	18.0	**316ML4**	**—**	**BN180M4**	**M5LA4**	—	—	244300	274000	136700	398
1.3	121500	1.3	1134	18.0	**317ML4**	**—**	**BN180M4**	**M5LA4**	—	—	381500	405300	137900	408
1.4	109200	1.1	1020	18.0	**316ML4**	**—**	**BN180M4**	**M5LA4**	—	—	241500	270900	133100	398
1.4	110600	1.6	1032	18.0	**317ML4**	**—**	**BN180M4**	**M5LA4**	—	—	376400	399900	133600	408
1.4	113400	2.3	1059	22.0	**318ML4**	**—**	**BN180M4**	**M5LA4**	—	—	359400	405800	179700	418
1.5	102100	1.4	953	50	**—**	**317MR4**	**BN180M4**	**M5LA4**	—	—	372200	395400	130100	410
1.6	96800	1.6	904	18.0	**317ML4**	**—**	**BN180M4**	**M5LA4**	—	—	369300	392400	127800	408
1.6	97600	2.8	911	22.0	**318ML4**	**—**	**BN180M4**	**M5LA4**	—	—	351800	397200	170900	418
1.7	92300	1.1	862	18.0	**315ML4**	**—**	**BN180M4**	**M5LA4**	—	—	154100	184800	75500	386
1.7	94300	1.2	880	18.0	**316ML4**	**—**	**BN180M4**	**M5LA4**	—	—	236500	265300	126700	398
1.8	84800	2.3	792	18.0	**317ML4**	**—**	**BN180M4**	**M5LA4**	—	—	362500	385100	122300	408
1.8	86000	1.8	803	50	**—**	**317MR4**	**BN180M4**	**M5LA4**	—	—	363200	385800	122900	410
1.9	83800	1.0	782	40	**—**	**315MR4**	**BN180M4**	**M5LA4**	—	—	152000	182200	73100	388
1.9	84000	1.4	784	18.0	**316ML4**	**—**	**BN180M4**	**M5LA4**	—	—	232600	260900	121900	398
1.9	83800	1.4	782	45	**—**	**316MR4**	**BN180M4**	**M5LA4**	—	—	232500	260900	121800	400
2.0	79000	0.9	738	15.0	**314ML4**	**—**	**BN180M4**	**M5LA4**	—	—	150700	180700	71700	374
2.0	79400	1.2	741	18.0	**315ML4**	**—**	**BN180M4**	**M5LA4**	—	—	150800	180800	71800	386
2.0	77000	2.2	719	18.0	**317ML4**	**—**	**BN180M4**	**M5LA4**	—	—	357500	379800	118500	408
2.1	75700	1.5	706	18.0	**316ML4**	**—**	**BN180M4**	**M5LA4**	—	—	229200	257100	117800	398
2.2	71600	1.1	668	15.0	**314ML4**	**—**	**BN180M4**	**M5LA4**	—	—	148600	178200	69400	374
2.2	71900	1.3	672	18.0	**315ML4**	**—**	**BN180M4**	**M5LA4**	—	—	148700	178300	69500	386
2.2	70600	1.2	659	40	**—**	**315MR4**	**BN180M4**	**M5LA4**	—	—	148300	177800	69000	388
2.2	70600	1.6	659	45	**—**	**316MR4**	**BN180M4**	**M5LA4**	—	—	226900	254500	115100	400
2.2	72500	2.2	677	50	**—**	**317MR4**	**BN180M4**	**M5LA4**	—	—	354400	376500	116100	410
2.3	66800	1.4	623	40	**—**	**315MR4**	**BN180M4**	**M5LA4**	—	—	147100	176400	67800	388
2.3	67300	1.7	628	18.0	**316ML4**	**—**	**BN180M4**	**M5LA4**	—	—	225400	252800	113200	398
2.3	66800	1.7	623	45	**—**	**316MR4**	**BN180M4**	**M5LA4**	—	—	225100	252500	112900	400
2.3	67000	1.8	626	50	**—**	**317MR4**	**BN180M4**	**M5LA4**	—	—	350500	372300	113100	410
2.4	66300	2.5	619	18.0	**317ML4**	**—**	**BN180M4**	**M5LA4**	—	—	349900	371700	112700	408
2.5	61600	1.1	575	15.0	**314ML4**	**—**	**BN180M4**	**M5LA4**	—	—	145400	174400	66000	374

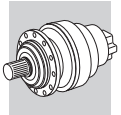

A

P_1 = 18.5 kW

n_2 min^{-1}	M_{n2} Nm	f_S	i	P_t kW					Rn_2 [N] MC	MZ	HC/PC	HZ/PZ	FZ	
2.5	63000	1.2	588	15.0	**314ML4**	**—**	**BN180M4**	**M5LA4**	—	—	145900	174900	66500	374
2.5	63300	1.5	591	18.0	**315ML4**	**—**	**BN180M4**	**M5LA4**	—	—	146000	175100	66600	386
2.6	60300	1.9	563	18.0	**316ML4**	**—**	**BN180M4**	**M5LA4**	—	—	221900	248900	109200	398
2.7	57100	1.7	533	18.0	**315ML4**	**—**	**BN180M4**	**M5LA4**	—	—	143900	172500	64300	386
2.8	56300	1.7	525	40	**—**	**315MR4**	**BN180M4**	**M5LA4**	—	—	143500	172100	64000	388
2.8	56300	2.2	525	45	**—**	**316MR4**	**BN180M4**	**M5LA4**	—	—	219700	246400	106700	400
2.8	55700	3.0	520	50	**—**	**317MR4**	**BN180M4**	**M5LA4**	—	—	341300	362600	106300	410
2.9	53600	2.3	500	18.0	**316ML4**	**—**	**BN180M4**	**M5LA4**	—	—	218200	244700	105000	398
3.0	53000	1.4	495	15.0	**314ML4**	**—**	**BN180M4**	**M5LA4**	—	—	142300	170700	62700	374
3.0	52100	1.8	487	18.0	**315ML4**	**—**	**BN180M4**	**M5LA4**	—	—	142000	170300	62400	386
3.2	49100	1.5	458	15.0	**314ML4**	**—**	**BN180M4**	**M5LA4**	—	—	140800	168800	61200	374
3.3	47200	2.0	441	18.0	**315ML4**	**—**	**BN180M4**	**M5LA4**	—	—	140000	167900	60400	386
3.3	47900	2.6	447	18.0	**316ML4**	**—**	**BN180M4**	**M5LA4**	—	—	214700	240800	101100	398
3.3	47400	2.6	443	45	**—**	**316MR4**	**BN180M4**	**M5LA4**	—	—	214400	240500	100800	400
3.4	46100	2.3	430	45	**—**	**316MR4**	**BN180M4**	**M5LA4**	—	—	213500	239500	99800	400
3.6	43800	2.2	409	40	**—**	**315MR4**	**BN180M4**	**M5LA4**	—	—	138500	166100	58900	388
3.7	42200	1.8	394	15.0	**314ML4**	**—**	**BN180M4**	**M5LA4**	—	—	137800	165200	58200	374
3.7	42700	2.4	399	18.0	**316ML4**	**—**	**BN180M4**	**M5LA4**	—	—	211200	236900	97300	398
4.0	39600	2.4	370	18.0	**315ML4**	**—**	**BN180M4**	**M5LA4**	—	—	136500	163700	56900	386
4.0	38800	2.7	363	45	**—**	**316MR4**	**BN180M4**	**M5LA4**	—	—	208400	233700	94300	400
4.2	36900	2.6	345	40	**—**	**315MR4**	**BN180M4**	**M5LA4**	—	—	135200	162100	55600	388
4.2	37000	2.8	346	18.0	**316ML4**	**—**	**BN180M4**	**M5LA4**	—	—	206900	232100	92800	398
4.3	36100	2.8	337	45	**—**	**316MR4**	**BN180M4**	**M5LA4**	—	—	206200	231300	92000	400
4.6	33600	2.2	314	15.0	**314ML4**	**—**	**BN180M4**	**M5LA4**	—	—	133400	160000	53900	374
4.8	33500	0.9	304	18.0	**313ML3**	**—**	**BN180M4**	**M5LA4**	—	—	142800	167300	47400	362
4.8	32400	2.9	302	18.0	**315ML4**	**—**	**BN180M4**	**M5LA4**	—	—	132700	159100	53200	386
5.8	27900	1.5	252	18.0	**313ML3**	**—**	**BN180M4**	**M5LA4**	—	—	142000	166400	44600	362
6.0	27100	1.3	245	18.0	**311ML3**	**—**	**BN180M4**	**M5LA4**	—	—	98000	100000	35900	350
6.1	26400	1.8	240	25.0	**314ML3**	**—**	**BN180M4**	**M5LA4**	—	—	132000	158300	49300	374
6.1	26600	2.2	241	30	**315ML3**	**—**	**BN180M4**	**M5LA4**	—	—	132000	158300	49300	386
7.0	23000	1.8	209	18.0	**313ML3**	**—**	**BN180M4**	**M5LA4**	—	—	142000	166400	41800	362
7.1	22800	2.7	206	25.0	**314ML3**	**—**	**BN180M4**	**M5LA4**	—	—	132000	158300	46900	374
7.2	22300	1.0	202	18.0	**310ML3**	**—**	**BN180M4**	**M5LA4**	—	—	78000	98900	33600	338
7.2	22400	1.6	203	18.0	**311ML3**	**—**	**BN180M4**	**M5LA4**	—	—	98000	100000	33700	350
7.5	21400	2.3	194	18.0	**313ML3**	**—**	**BN180M4**	**M5LA4**	—	—	142000	166400	40800	362
7.6	21100	1.5	191	18.0	**311ML3**	**—**	**BN180M4**	**M5LA4**	—	—	98000	100000	33000	350
8.0	20100	1.5	182	18.0	**313ML3**	**—**	**BN180M4**	**M5LA4**	—	—	142000	166400	40000	362
8.2	19600	0.9	177	18.0	**310ML3**	**—**	**BN180M4**	**M5LA4**	—	—	78000	98900	32200	338
8.3	19400	2.2	176	18.0	**313ML3**	**—**	**BN180M4**	**M5LA4**	—	—	142000	166400	39500	362
8.5	18900	1.9	171	18.0	**311ML3**	**—**	**BN180M4**	**M5LA4**	—	—	98000	100000	31800	350
8.9	18100	1.5	164	18.0	**310ML3**	**—**	**BN180M4**	**M5LA4**	—	—	78000	98900	31300	338
9.0	18000	2.8	163	18.0	**313ML3**	**—**	**BN180M4**	**M5LA4**	—	—	142000	166400	38500	362
9.1	17800	2.0	161	18.0	**311ML3**	**—**	**BN180M4**	**M5LA4**	—	—	98000	100000	31200	350
9.3	17300	2.7	157	55	**—**	**314MR3C**	**BN180M4**	**M5LA4**	—	—	132000	158300	42800	376
9.5	16900	1.8	153	40	**—**	**313MR3**	**BN180M4**	**M5LA4**	—	—	142000	166400	37700	364
9.7	16700	2.5	151	18.0	**313ML3**	**—**	**BN180M4**	**M5LA4**	—	—	142000	166400	37600	362
9.8	16500	1.3	149	18.0	**310ML3**	**—**	**BN180M4**	**M5LA4**	—	—	78000	98900	30400	338
9.9	16200	2.2	147	18.0	**311ML3**	**—**	**BN180M4**	**M5LA4**	—	—	98000	100000	30200	350
10.0	16200	1.7	147	40	**—**	**311MR3**	**BN180M4**	**M5LA4**	—	—	98000	100000	30200	352
10.2	15800	2.6	143	18.0	**313ML3**	**—**	**BN180M4**	**M5LA4**	—	—	141100	165400	36900	362
10.8	14900	1.7	135	18.0	**310ML3**	**—**	**BN180M4**	**M5LA4**	—	—	76200	96700	29400	338
11.0	14700	2.4	133	18.0	**311ML3**	**—**	**BN180M4**	**M5LA4**	—	—	95300	100000	29300	350
11.5	14000	2.9	127	40	**—**	**313MR3**	**BN180M4**	**M5LA4**	—	—	136200	159600	35500	364
11.8	13600	2.5	124	40	**—**	**311MR3**	**BN180M4**	**M5LA4**	—	—	93200	100000	28500	352
12.3	13100	1.6	119	18.0	**310ML3**	**—**	**BN180M4**	**M5LA4**	—	—	73400	93000	28200	338
12.7	12600	2.7	115	18.0	**311ML3**	**—**	**BN180M4**	**M5LA4**	—	—	91100	100000	27800	350
13.5	11900	2.1	108	18.0	**310ML3**	**—**	**BN180M4**	**M5LA4**	—	—	71200	90300	27300	338
14.0	11500	2.9	104	40	**—**	**311MR3**	**BN180M4**	**M5LA4**	—	—	88500	100000	27000	352
14.5	11100	1.9	101	18.0	**310ML3**	**—**	**BN180M4**	**M5LA4**	—	—	69800	88500	26700	338
15.2	10600	2.8	96.3	40	**—**	**311MR3**	**BN180M4**	**M5LA4**	—	—	86500	100000	26300	352
15.7	10200	2.3	92.7	18.0	**310ML3**	**—**	**BN180M4**	**M5LA4**	—	—	68100	86300	25900	338
18.2	8870	2.3	80.3	18.0	**310ML3**	**—**	**BN180M4**	**M5LA4**	—	—	65200	82700	24700	338
19.8	8160	2.7	73.9	18.0	**310ML3**	**—**	**BN180M4**	**M5LA4**	—	—	63600	80600	24000	338
23.3	6910	2.9	62.6	18.0	**310ML3**	**—**	**BN180M4**	**M5LA4**	—	—	60500	76700	22700	338
31	5290	1.2	46.5	13.0	**306L2**	**—**	**BN180M4**	**M5LA4**	17100	19500	40400	46700	11100	302

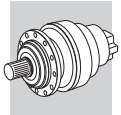

A

P_1 = 18.5 kW

n_2 min^{-1}	M_{n2} Nm	f_S	i	P_t kW					Rn_2 [N] MC	MZ	HC/PC	HZ/PZ	FZ	
31	5320	1.6	46.7	18.0	**307L2**	—	**BN180M4**	**M5LA4**	20500	25700	48000	63100	14300	314
31	5320	2.4	46.7	18.0	**309L2**	—	**BN180M4**	**M5LA4**	—	—	49000	63100	11400	326
38	4380	1.5	38.4	13.0	**306L2**	—	**BN180M4**	**M5LA4**	16000	18300	38200	44100	10400	302
38	4400	1.9	38.6	18.0	**307L2**	—	**BN180M4**	**M5LA4**	19300	24100	45300	59600	13400	314
38	4400	2.8	38.6	18.0	**309L2**	—	**BN180M4**	**M5LA4**	—	—	46300	59600	10700	326
44	3760	1.8	33.1	13.0	**306L2**	—	**BN180M4**	**M5LA4**	15200	17400	36500	42100	9900	302
45	3710	2.5	32.6	18.0	**307L2**	—	**BN180M4**	**M5LA4**	18200	22700	43000	56600	12700	314
48	3490	2.8	30.7	18.0	**307L2**	—	**BN180M4**	**M5LA4**	17800	22300	42300	55600	12400	314
51	3240	2.1	28.4	13.0	**306L2**	—	**BN180M4**	**M5LA4**	14500	16500	34900	40300	9420	302
52	3190	2.9	28.0	18.0	**307L2**	—	**BN180M4**	**M5LA4**	17300	21600	41100	54100	12000	314
55	3000	2.1	26.4	13.0	**306L2**	—	**BN180M4**	**M5LA4**	14100	16100	34100	39400	9180	302
62	2680	3.0	23.5	35.0	—	**307R2**	**BN180M4**	**M5LA4**	16300	20400	39000	51400	11400	316
64	2580	2.4	22.7	13.0	**306L2**	—	**BN180M4**	**M5LA4**	13400	15300	32600	37600	8730	302
81	2060	2.9	18.1	13.0	**306L2**	—	**BN180M4**	**M5LA4**	12500	14200	30500	35200	8090	302
95	1740	2.9	15.3	13.0	**306L2**	—	**BN180M4**	**M5LA4**	11800	13400	29000	33400	7660	302
195	880	1.4	7.50	11.0	**303L1**	—	**BN180M4**	**M5LA4**	7810	8920	16600	19700	4140	266
195	880	2.6	7.50	13.0	**305L1**	—	**BN180M4**	**M5LA4**	7810	8920	16600	19700	4140	290
222	770	2.4	6.57	12.0	**304L1**	—	**BN180M4**	**M5LA4**	7470	8540	16000	18900	3960	278
235	730	1.9	6.20	11.0	**303L1**	—	**BN180M4**	**M5LA4**	7330	8370	15700	18600	3890	266
274	630	2.4	5.33	11.0	**303L1**	—	**BN180M4**	**M5LA4**	6970	7960	15000	17800	3700	266
344	500	2.9	4.25	11.0	**303L1**	—	**BN180M4**	**M5LA4**	6460	7380	14000	16600	3430	266

P_1 = 22 kW

n_2 min^{-1}	M_{n2} Nm	f_S	i	P_t kW					Rn_2 [N] MC	MZ	HC/PC	HZ/PZ	FZ	
1.1	168100	0.9	1318	18.0	**317ML4**	—	**BN180L4**	—	—	—	389800	414100	145000	408
1.1	177000	1.9	1389	30.0	**319L4**	—	**BN180L4**	—	—	—	454000	499800	196700	428
1.2	152300	2.3	1195	30.0	**319L4**	—	**BN180L4**	—	—	—	444300	489200	187100	428
1.3	144600	1.1	1134	18.0	**317ML4**	—	**BN180L4**	—	—	—	381500	405300	137900	408
1.4	130000	0.9	1020	18.0	**316ML4**	—	**BN180L4**	—	—	—	241500	270900	133100	398
1.4	131600	1.3	1032	18.0	**317ML4**	—	**BN180L4**	—	—	—	376400	399900	133600	408
1.4	135000	1.9	1059	22.0	**318ML4**	—	**BN180L4**	—	—	—	359400	405800	179700	418
1.5	121500	1.1	953	50	—	**317MR4**	**BN180L4**	—	—	—	372200	395400	130100	410
1.5	128300	2.6	1007	30.0	**319L4**	—	**BN180L4**	—	—	—	433600	477300	176700	428
1.6	115200	1.4	904	18.0	**317ML4**	—	**BN180L4**	—	—	—	369300	392400	127800	408
1.6	116100	2.4	911	22.0	**318ML4**	—	**BN180L4**	—	—	—	351800	397200	170900	418
1.6	116200	2.8	912	30.0	**319L4**	—	**BN180L4**	—	—	—	427500	470700	171000	428
1.6	115500	2.8	906	115	—	**319R4C**	**BN180L4**	—	—	—	427100	470300	170600	430
1.7	112200	1.0	880	18.0	**316ML4**	—	**BN180L4**	—	—	—	236500	265300	126700	398
1.8	101000	1.9	792	18.0	**317ML4**	—	**BN180L4**	—	—	—	362500	385100	122300	408
1.8	102400	1.5	803	50	—	**317MR4**	**BN180L4**	—	—	—	363200	385800	122900	410
1.9	99900	1.1	784	18.0	**316ML4**	—	**BN180L4**	—	—	—	232600	260900	121900	398
1.9	99700	1.1	782	45	—	**316MR4**	**BN180L4**	—	—	—	232500	260900	121800	400
1.9	97900	2.8	768	22.0	**318ML4**	—	**BN180L4**	—	—	—	343300	387600	161400	418
2.0	94500	1.0	741	18.0	**315ML4**	—	**BN180L4**	—	—	—	150800	180800	71800	386
2.0	91700	1.9	719	18.0	**317ML4**	—	**BN180L4**	—	—	—	357500	379800	118500	408
2.0	92500	2.9	726	22.0	**318ML4**	—	**BN180L4**	—	—	—	340500	384500	158400	418
2.1	90100	1.3	706	18.0	**316ML4**	—	**BN180L4**	—	—	—	229200	257100	117800	398
2.1	88100	2.9	691	110	—	**318MR4C**	**BN180L4**	—	—	—	338200	381800	155900	420
2.2	85600	1.1	672	18.0	**315ML4**	—	**BN180L4**	—	—	—	148700	178300	69500	386
2.2	84000	1.0	659	40	—	**315MR4**	**BN180L4**	—	—	—	148300	177800	69000	388
2.2	84000	1.3	659	45	—	**316MR4**	**BN180L4**	—	—	—	226900	254500	115100	400
2.2	86300	1.8	677	50	—	**317MR4**	**BN180L4**	—	—	—	354400	376500	116100	410
2.3	79500	1.2	623	40	—	**315MR4**	**BN180L4**	—	—	—	147100	176400	67800	388
2.3	80100	1.4	628	18.0	**316ML4**	—	**BN180L4**	—	—	—	225400	252800	113200	398
2.3	79500	1.4	623	45	—	**316MR4**	**BN180L4**	—	—	—	225100	252500	112900	400
2.3	79800	1.5	626	50	—	**317MR4**	**BN180L4**	—	—	—	350500	372300	113100	410
2.4	78900	2.1	619	18.0	**317ML4**	—	**BN180L4**	—	—	—	349900	371700	112700	408
2.5	73300	0.9	575	15.0	**314ML4**	—	**BN180L4**	—	—	—	145400	174400	66000	374
2.5	75000	1.0	588	15.0	**314ML4**	—	**BN180L4**	—	—	—	145900	174900	66500	374
2.5	75300	1.3	591	18.0	**315ML4**	—	**BN180L4**	—	—	—	146000	175100	66600	386

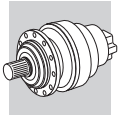

A

P_1 = 22 kW

n_2 min^{-1}	M_{n2} Nm	f_S	i	P_t kW					Rn_2 [N] MC	MZ	HC/PC	HZ/PZ	FZ	
2.6	71800	1.6	563	18.0	**316ML4**	—	**BN180L4**	—	—	—	221900	248900	109200	398
2.6	70300	2.8	552	18.0	**317ML4**	—	**BN180L4**	—	—	—	344200	365700	108400	408
2.7	68000	1.4	533	18.0	**315ML4**	—	**BN180L4**	—	—	—	143900	172500	64300	386
2.8	67000	1.4	525	40	—	**315MR4**	**BN180L4**	—	—	—	143500	172100	64000	388
2.8	67000	1.9	525	45	—	**316MR4**	**BN180L4**	—	—	—	219700	246400	106700	400
2.8	66300	2.5	520	50	—	**317MR4**	**BN180L4**	—	—	—	341300	362600	106300	410
2.9	63800	2.0	500	18.0	**316ML4**	—	**BN180L4**	—	—	—	218200	244700	105000	398
3.0	63000	1.2	495	15.0	**314ML4**	—	**BN180L4**	—	—	—	142300	170700	62700	374
3.0	62100	1.5	487	18.0	**315ML4**	—	**BN180L4**	—	—	—	142000	170300	62400	386
3.0	62800	2.7	493	18.0	**317ML4**	—	**BN180L4**	—	—	—	338700	359800	104400	408
3.2	58400	1.3	458	15.0	**314ML4**	—	**BN180L4**	—	—	—	140800	168800	61200	374
3.3	56200	1.7	441	18.0	**315ML4**	—	**BN180L4**	—	—	—	140000	167900	60400	386
3.3	57000	2.2	447	18.0	**316ML4**	—	**BN180L4**	—	—	—	214700	240800	101100	398
3.3	56400	2.2	443	45	—	**316MR4**	**BN180L4**	—	—	—	214400	240500	100800	400
3.3	55900	2.8	438	50	—	**317MR4**	**BN180L4**	—	—	—	333100	353800	100400	410
3.4	54900	1.9	430	45	—	**316MR4**	**BN180L4**	—	—	—	213500	239500	99800	400
3.6	52200	1.8	409	40	—	**315MR4**	**BN180L4**	—	—	—	138500	166100	58900	388
3.7	50200	1.5	394	15.0	**314ML4**	—	**BN180L4**	—	—	—	137800	165200	58200	374
3.7	50900	2.1	399	18.0	**316ML4**	—	**BN180L4**	—	—	—	211200	236900	97300	398
3.7	50900	2.9	399	50	—	**317MR4**	**BN180L4**	—	—	—	328600	349100	97300	410
4.0	47100	2.0	370	18.0	**315ML4**	—	**BN180L4**	—	—	—	136500	163700	56900	386
4.0	46200	2.2	363	45	—	**316MR4**	**BN180L4**	—	—	—	208400	233700	94300	400
4.2	44000	2.2	345	40	—	**315MR4**	**BN180L4**	—	—	—	135200	162100	55600	388
4.2	44100	2.3	346	18.0	**316ML4**	—	**BN180L4**	—	—	—	206900	232100	92800	398
4.3	43000	2.4	337	45	—	**316MR4**	**BN180L4**	—	—	—	206200	231300	92000	400
4.3	42900	2.9	336	50	—	**317MR4**	**BN180L4**	—	—	—	320700	340700	91900	410
4.6	40000	1.9	314	15.0	**314ML4**	—	**BN180L4**	—	—	—	133400	160000	53900	374
4.8	38500	2.5	302	18.0	**315ML4**	—	**BN180L4**	—	—	—	132700	159100	53200	386
5.1	36800	2.9	289	45	—	**316MR4**	**BN180L4**	—	—	—	202000	226600	87400	400
5.4	34300	2.7	269	40	—	**315MR4**	**BN180L4**	—	—	—	132000	158300	51200	388
5.4	34300	2.9	269	45	—	**316MR4**	**BN180L4**	—	—	—	202000	226600	85300	400
5.6	33400	2.9	262	50	—	**317MR4**	**BN180L4**	—	—	—	314300	333900	84600	410
5.8	33200	1.3	252	18.0	**313ML3**	—	**BN180L4**	—	—	—	142000	166400	44600	362
6.0	32200	1.1	245	18.0	**311ML3**	—	**BN180L4**	—	—	—	98000	100000	35900	350
6.1	31500	1.5	240	25.0	**314ML3**	—	**BN180L4**	—	—	—	132000	158300	49300	374
6.1	31600	1.9	241	30.0	**315ML3**	—	**BN180L4**	—	—	—	132000	158300	49300	386
6.5	28700	2.9	225	40	—	**315MR4**	**BN180L4**	—	—	—	132000	158300	48300	388
6.5	28700	2.9	225	45	—	**316MR4**	**BN180L4**	—	—	—	202000	226600	80400	400
6.7	28000	2.9	220	50	—	**317MR4**	**BN180L4**	—	—	—	314300	333900	79800	410
7.0	27400	1.5	209	18.0	**313ML3**	—	**BN180L4**	—	—	—	142000	166400	41800	362
7.1	27100	2.3	206	25.0	**314ML3**	—	**BN180L4**	—	—	—	132000	158300	46900	374
7.1	27200	2.8	207	30.0	**315ML3**	—	**BN180L4**	—	—	—	132000	158300	46900	386
7.2	26700	1.3	203	18.0	**311ML3**	—	**BN180L4**	—	—	—	98000	100000	33700	350
7.5	25400	1.9	194	18.0	**313ML3**	—	**BN180L4**	—	—	—	142000	166400	40800	362
7.6	25100	1.3	191	18.0	**311ML3**	—	**BN180L4**	—	—	—	98000	100000	33000	350
8.0	23900	1.3	182	18.0	**313ML3**	—	**BN180L4**	—	—	—	142000	166400	40000	362
8.3	23100	1.8	176	18.0	**313ML3**	—	**BN180L4**	—	—	—	142000	166400	39500	362
8.4	22800	2.6	174	25.0	**314ML3**	—	**BN180L4**	—	—	—	132000	158300	44300	374
8.5	22500	1.6	171	18.0	**311ML3**	—	**BN180L4**	—	—	—	98000	100000	31800	350
8.9	21500	1.2	164	18.0	**310ML3**	—	**BN180L4**	—	—	—	78000	98900	31300	338
8.9	21600	2.8	164	25.0	**314ML3**	—	**BN180L4**	—	—	—	132000	158300	43400	374
9.0	21400	2.4	163	18.0	**313ML3**	—	**BN180L4**	—	—	—	142000	166400	38500	362
9.1	21200	1.7	161	18.0	**311ML3**	—	**BN180L4**	—	—	—	98000	100000	31200	350
9.3	20600	2.3	157	55	—	**314MR3C**	**BN180L4**	—	—	—	132000	158300	42800	376
9.3	20600	2.9	157	90	—	**315MR3C**	**BN180L4**	—	—	—	132000	158300	42800	388
9.5	20100	1.5	153	40	—	**313MR3**	**BN180L4**	—	—	—	142000	166400	37700	364
9.7	19900	2.1	151	18.0	**313ML3**	—	**BN180L4**	—	—	—	142000	166400	37600	362
9.8	19600	1.1	149	18.0	**310ML3**	—	**BN180L4**	—	—	—	78000	98900	30400	338
9.9	19300	1.8	147	18.0	**311ML3**	—	**BN180L4**	—	—	—	98000	100000	30200	350
10.0	19300	1.4	147	40	—	**311MR3**	**BN180L4**	—	—	—	98000	100000	30200	352
10.2	18800	2.2	143	18.0	**313ML3**	—	**BN180L4**	—	—	—	141100	165400	36900	362
10.8	17800	1.5	135	18.0	**310ML3**	—	**BN180L4**	—	—	—	76200	96700	29400	338
10.8	17700	2.8	135	18.0	**313ML3**	—	**BN180L4**	—	—	—	138700	162500	36200	362
11.0	17500	2.0	133	18.0	**311ML3**	—	**BN180L4**	—	—	—	95300	100000	29300	350
11.5	16700	2.4	127	40	—	**313MR3**	**BN180L4**	—	—	—	136200	159600	35500	364

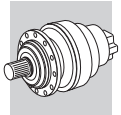

P_1 = 22 kW

n_2 min^{-1}	M_{n2} Nm	f_S	i	P_t kW					Rn_2 [N] MC	MZ	HC/PC	HZ/PZ	FZ	
11.8	16200	2.1	124	40	—	**311MR3**	**BN180L4**	—	—	—	93200	100000	28500	352
12.1	15800	2.6	120	18.0	**313ML3**	—	**BN180L4**	—	—	—	134000	157100	34800	362
12.3	15600	1.4	119	18.0	**310ML3**	—	**BN180L4**	—	—	—	73400	93000	28200	338
12.7	15100	2.3	115	18.0	**311ML3**	—	**BN180L4**	—	—	—	91100	100000	27800	350
13.5	14200	1.7	108	18.0	**310ML3**	—	**BN180L4**	—	—	—	71200	90300	27300	338
13.6	14100	2.7	107	40	—	**313MR3**	**BN180L4**	—	—	—	129400	151600	33500	364
14.0	13700	2.4	104	40	—	**311MR3**	**BN180L4**	—	—	—	88500	100000	27000	352
14.1	13600	2.7	104	18.0	**311ML3**	—	**BN180L4**	—	—	—	88500	100000	26900	350
14.5	13200	1.6	101	18.0	**310ML3**	—	**BN180L4**	—	—	—	69800	88500	26700	338
15.0	12800	2.9	97.5	40	—	**313MR3**	**BN180L4**	—	—	—	125800	147400	32500	364
15.2	12700	2.3	96.3	40	—	**311MR3**	**BN180L4**	—	—	—	86500	100000	26300	352
15.7	12200	1.9	92.7	18.0	**310ML3**	—	**BN180L4**	—	—	—	68100	86300	25900	338
16.4	11700	3.0	89.3	18.0	**311ML3**	—	**BN180L4**	—	—	—	84500	100000	25600	350
17.8	10800	2.9	82.2	40	—	**313MR3**	**BN180L4**	—	—	—	119500	140000	30700	364
18.0	10700	2.8	81.1	40	—	**311MR3**	**BN180L4**	—	—	—	82200	100000	24800	352
18.2	10600	2.0	80.3	18.0	**310ML3**	—	**BN180L4**	—	—	—	65200	82700	24700	338
19.8	9710	2.3	73.9	18.0	**310ML3**	—	**BN180L4**	—	—	—	63600	80600	24000	338
20.9	9190	2.9	69.9	40	—	**313MR3**	**BN180L4**	—	—	—	113900	133400	29100	364
21.5	8940	2.9	68.0	40	—	**311MR3**	**BN180L4**	—	—	—	77900	99400	23400	352
22.8	8410	2.9	64.0	40	—	**313MR3**	**BN180L4**	—	—	—	110900	129900	28200	364
23.1	8310	2.9	63.2	40	—	**311MR3**	**BN180L4**	—	—	—	76200	97200	22800	352
23.3	8230	2.4	62.6	18.0	**310ML3**	—	**BN180L4**	—	—	—	60500	76700	22700	338
27.2	7050	2.9	53.7	40	—	**313MR3**	**BN180L4**	—	—	—	105200	123200	26600	364
27.5	6970	2.8	53.0	18.0	**310ML3**	—	**BN180L4**	—	—	—	57600	73000	21500	338
27.6	6960	2.9	53.0	40	—	**311MR3**	**BN180L4**	—	—	—	72300	92200	21500	352
31	6300	1.0	46.5	13.0	**306L2**	—	**BN180L4**	—	17100	19500	40400	46700	11100	302
31	6330	1.3	46.7	18.0	**307L2**	—	**BN180L4**	—	20500	25700	48000	63100	14300	314
31	6330	2.0	46.7	18.0	**309L2**	—	**BN180L4**	—	—	—	49000	63100	11400	326
31	6330	2.8	46.7	22.0	**310ML2**	—	**BN180L4**	—	—	—	55400	70300	20600	338
38	5210	1.2	38.4	13.0	**306L2**	—	**BN180L4**	—	16000	18300	38200	44100	10400	302
38	5230	1.6	38.6	18.0	**307L2**	—	**BN180L4**	—	19300	24100	45300	59600	13400	314
38	5230	2.4	38.6	18.0	**309L2**	—	**BN180L4**	—	—	—	46300	59600	10700	326
44	4480	1.5	33.1	13.0	**306L2**	—	**BN180L4**	—	15200	17400	36500	42100	9900	302
45	4410	2.1	32.6	18.0	**307L2**	—	**BN180L4**	—	18200	22700	43000	56600	12700	314
45	4410	3.0	32.6	18.0	**309L2**	—	**BN180L4**	—	—	—	44000	56600	10100	326
48	4160	2.3	30.7	18.0	**307L2**	—	**BN180L4**	—	17800	22300	42300	55600	12400	314
51	3850	1.8	28.4	13.0	**306L2**	—	**BN180L4**	—	14500	16500	34900	40300	9420	302
52	3790	2.4	28.0	18.0	**307L2**	—	**BN180L4**	—	17300	21600	41100	54100	12000	314
55	3570	1.8	26.4	13.0	**306L2**	—	**BN180L4**	—	14100	16100	34100	39400	9180	302
58	3440	2.7	25.4	18.0	**307L2**	—	**BN180L4**	—	16700	20900	39900	52500	11700	314
62	3190	2.5	23.5	35	—	**307R2**	**BN180L4**	—	16300	20400	39000	51400	11400	316
62	3190	2.9	23.5	35	—	**309R2**	**BN180L4**	—	—	—	39900	51400	9090	328
64	3070	2.0	22.7	13.0	**306L2**	—	**BN180L4**	—	13400	15300	32600	37600	8730	302
67	2960	3.0	21.8	18.0	**307L2**	—	**BN180L4**	—	15900	19900	38200	50200	11100	314
74	2690	2.9	19.8	35	—	**307R2**	**BN180L4**	—	15400	19300	37100	48800	10700	316
74	2690	2.9	19.8	35	—	**309R2**	**BN180L4**	—	—	—	37900	48800	8590	328
81	2450	2.4	18.1	13.0	**306L2**	—	**BN180L4**	—	12500	14200	30500	35200	8090	302
94	2090	2.9	15.5	35	—	**307R2**	**BN180L4**	—	14200	17700	34400	45300	9880	316
94	2090	2.9	15.5	35	—	**309R2**	**BN180L4**	—	—	—	35200	45300	7900	328
95	2070	2.4	15.3	13.0	**306L2**	—	**BN180L4**	—	11800	13400	29000	33400	7660	302
113	1760	2.8	13.0	13.0	**306L2**	—	**BN180L4**	—	11200	12700	27600	31800	7250	302
113	1750	2.9	13.0	35	—	**307R2**	**BN180L4**	—	13400	16700	32600	42900	9320	316
113	1750	2.9	13.0	35	—	**309R2**	**BN180L4**	—	—	—	33400	42900	7450	328
195	1050	1.2	7.50	11.0	**303L1**	—	**BN180L4**	—	7810	8920	16600	19700	4140	266
195	1050	2.2	7.50	13.0	**305L1**	—	**BN180L4**	—	7810	8920	16600	19700	4140	290
222	920	2.0	6.57	12.0	**304L1**	—	**BN180L4**	—	7470	8540	16000	18900	3960	278
235	870	1.6	6.20	11.0	**303L1**	—	**BN180L4**	—	7330	8370	15700	18600	3890	266
274	740	2.0	5.33	11.0	**303L1**	—	**BN180L4**	—	6970	7960	15000	17800	3700	266
274	740	2.7	5.33	12.0	**304L1**	—	**BN180L4**	—	6970	7960	15000	17800	3700	278
344	590	2.4	4.25	11.0	**303L1**	—	**BN180L4**	—	6460	7380	14000	16600	3430	266
406	500	2.8	3.60	11.0	**303L1**	—	**BN180L4**	—	6110	6990	13300	15800	3240	266

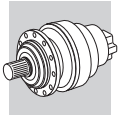

A

P_1 = 30 kW

n_2 min^{-1}	M_{n2} Nm	f_S	i	P_t kW					Rn_2 [N] MC	MZ	HC/PC	HZ/PZ	FZ	
1.1	239700	1.4	1389	30.0	**319L4**	—	**BN200L4**	—	—	—	453500	499300	196200	428
1.2	206200	1.7	1195	30.0	**319L4**	—	**BN200L4**	—	—	—	443900	488700	186600	428
1.3	193600	2.7	1122	35	**321L4**	—	**BN200L4**	—	—	—	622200	740600	1106400	438
1.4	178200	1.0	1032	18.0	**317ML4**	—	**BN200L4**	—	—	—	376100	399500	133300	408
1.4	182800	1.4	1059	22.0	**318ML4**	—	**BN200L4**	—	—	—	359100	405400	179300	418
1.5	173800	1.9	1007	30.0	**319L4**	—	**BN200L4**	—	—	—	433100	476900	176300	428
1.6	156000	1.0	904	18.0	**317ML4**	—	**BN200L4**	—	—	—	369000	392000	127500	408
1.6	157300	1.8	911	22.0	**318ML4**	—	**BN200L4**	—	—	—	351400	396800	170500	418
1.6	157400	2.0	912	30.0	**319L4**	—	**BN200L4**	—	—	—	427100	470200	170600	428
1.6	156500	2.0	906	115	—	**319R4C**	**BN200L4**	—	—	—	426700	469800	170200	430
1.7	146800	2.8	850	30.0	**319L4**	—	**BN200L4**	—	—	—	422800	465500	166700	428
1.8	138700	1.1	803	50	—	**317MR4**	**BN200L4**	—	—	—	362800	385500	122600	410
1.8	138500	2.3	802	30.0	**319L4**	—	**BN200L4**	—	—	—	419300	461700	163400	428
1.9	136700	1.4	792	18.0	**317ML4**	—	**BN200L4**	—	—	—	362100	384700	122100	408
1.9	132500	2.0	768	22.0	**318ML4**	—	**BN200L4**	—	—	—	342900	387200	161100	418
1.9	134600	2.4	780	115	—	**319R4C**	**BN200L4**	—	—	—	417600	459800	161900	430
2.0	124100	1.4	719	18.0	**317ML4**	—	**BN200L4**	—	—	—	357100	379400	118200	408
2.0	125300	2.1	726	22.0	**318ML4**	—	**BN200L4**	—	—	—	340200	384100	158100	418
2.1	121900	0.9	706	18.0	**316ML4**	—	**BN200L4**	—	—	—	228900	256800	117500	398
2.1	119300	2.2	691	110	—	**318MR4C**	**BN200L4**	—	—	—	337800	381500	155500	420
2.2	113800	1.0	659	45	—	**316MR4**	**BN200L4**	—	—	—	226700	254300	114800	400
2.2	116800	1.3	677	50	—	**317MR4**	**BN200L4**	—	—	—	354100	376100	115800	410
2.2	113000	2.7	655	95	—	**319R4B**	**BN200L4**	—	—	—	407300	448500	152700	430
2.2	113400	2.7	657	115	—	**319R4C**	**BN200L4**	—	—	—	407500	448700	152900	430
2.3	108400	1.0	628	18.0	**316ML4**	—	**BN200L4**	—	—	—	225100	252600	113000	398
2.3	108100	1.1	626	50	—	**317MR4**	**BN200L4**	—	—	—	350100	372000	112800	410
2.3	111700	2.4	647	22.0	**318ML4**	—	**BN200L4**	—	—	—	334600	377900	152100	418
2.4	107600	1.1	623	45	—	**316MR4**	**BN200L4**	—	—	—	224900	252300	112700	400
2.4	106800	1.6	619	18.0	**317ML4**	—	**BN200L4**	—	—	—	349500	371300	112400	408
2.4	105600	2.5	612	22.0	**318ML4**	—	**BN200L4**	—	—	—	332000	374900	149300	418
2.4	107900	2.9	625	30.0	**319L4**	—	**BN200L4**	—	—	—	404600	445500	150400	428
2.5	102000	0.9	591	18.0	**315ML4**	—	**BN200L4**	—	—	—	145800	174900	66400	386
2.5	102600	2.5	595	110	—	**318MR4C**	**BN200L4**	—	—	—	330700	373300	147900	420
2.6	97200	1.2	563	18.0	**316ML4**	—	**BN200L4**	—	—	—	221600	248600	108900	398
2.7	95200	2.0	552	18.0	**317ML4**	—	**BN200L4**	—	—	—	343900	365300	108200	408
2.8	92100	1.0	533	18.0	**315ML4**	—	**BN200L4**	—	—	—	143700	172400	64200	386
2.8	90700	1.0	525	40	—	**315MR4**	**BN200L4**	—	—	—	143400	172000	63900	388
2.8	90700	1.4	525	45	—	**316MR4**	**BN200L4**	—	—	—	219500	246200	106400	400
2.8	89800	1.9	520	50	—	**317MR4**	**BN200L4**	—	—	—	341000	362200	106100	410
2.9	86400	1.5	500	18.0	**316ML4**	—	**BN200L4**	—	—	—	218000	244500	104700	398
2.9	89000	2.9	515	22.0	**318ML4**	—	**BN200L4**	—	—	—	324000	365800	141000	418
2.9	86200	2.9	499	90	—	**318MR4B**	**BN200L4**	—	—	—	322500	364100	139500	420
2.9	86500	2.9	501	110	—	**318MR4C**	**BN200L4**	—	—	—	322700	364300	139700	420
3.0	84000	1.1	487	18.0	**315ML4**	—	**BN200L4**	—	—	—	141900	170100	62300	386
3.0	85100	2.0	493	18.0	**317ML4**	—	**BN200L4**	—	—	—	338400	359500	104200	408
3.2	79100	0.9	458	15.0	**314ML4**	—	**BN200L4**	—	—	—	140600	168700	61000	374
3.3	76100	1.2	441	18.0	**315ML4**	—	**BN200L4**	—	—	—	139900	167700	60200	386
3.3	77200	1.6	447	18.0	**316ML4**	—	**BN200L4**	—	—	—	214500	240600	100900	398
3.3	76400	1.6	443	45	—	**316MR4**	**BN200L4**	—	—	—	214200	240200	100500	400
3.3	77500	2.4	449	18.0	**317ML4**	—	**BN200L4**	—	—	—	333900	354700	101000	408
3.4	74300	1.4	430	45	—	**316MR4**	**BN200L4**	—	—	—	213300	239300	99600	400
3.4	75600	2.1	438	50	—	**317MR4**	**BN200L4**	—	—	—	332700	353500	100200	410
3.6	70600	1.3	409	40	—	**315MR4**	**BN200L4**	—	—	—	138400	166000	58800	388
3.7	68000	1.1	394	15.0	**314ML4**	—	**BN200L4**	—	—	—	137600	165100	58000	374
3.7	68900	1.5	399	18.0	**316ML4**	—	**BN200L4**	—	—	—	211000	236700	97100	398
3.7	68900	2.2	399	50	—	**317MR4**	**BN200L4**	—	—	—	328300	348800	97100	410
3.9	65300	2.8	378	18.0	**317ML4**	—	**BN200L4**	—	—	—	325800	346100	95400	408
4.0	63800	1.5	370	18.0	**315ML4**	—	**BN200L4**	—	—	—	136400	163600	56800	386
4.1	62600	1.6	363	45	—	**316MR4**	**BN200L4**	—	—	—	208100	233500	94100	400
4.3	59500	1.6	345	40	—	**315MR4**	**BN200L4**	—	—	—	135000	161900	55500	388
4.3	59700	1.7	346	18.0	**316ML4**	—	**BN200L4**	—	—	—	206700	231900	92600	398
4.4	58200	1.7	337	45	—	**316MR4**	**BN200L4**	—	—	—	206000	231100	91800	400
4.4	58000	2.2	336	50	—	**317MR4**	**BN200L4**	—	—	—	320400	340400	91700	410
4.6	54900	2.3	318	18.0	**316ML4**	—	**BN200L4**	—	—	—	204300	229100	90000	398
4.7	54200	1.4	314	15.0	**314ML4**	—	**BN200L4**	—	—	—	133200	159800	53800	374

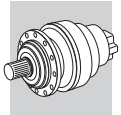

P_1 = 30 kW

n_2 min^{-1}	M_{n2} Nm	f_S	i	P_t kW					Rn_2 [N] MC	MZ	HC/PC	HZ/PZ	FZ	
4.9	52200	1.8	302	18.0	**315ML4**	—	**BN200L4**	—	—	—	132500	158900	53100	386
5.1	49900	2.2	289	45	—	**316MR4**	**BN200L4**	—	—	—	202000	226600	87200	400
5.3	47500	2.6	275	18.0	**316ML4**	—	**BN200L4**	—	—	—	202000	226600	85800	398
5.5	46400	2.0	269	40	—	**315MR4**	**BN200L4**	—	—	—	132000	158300	51100	388
5.5	46400	2.2	269	45	—	**316MR4**	**BN200L4**	—	—	—	202000	226600	85100	400
5.6	45200	2.2	262	50	—	**317MR4**	**BN200L4**	—	—	—	314300	333900	84400	410
5.8	44900	1.0	252	18.0	**313ML3**	—	**BN200L4**	—	—	—	142000	166400	44500	362
5.8	43700	2.8	253	18.0	**316ML4**	—	**BN200L4**	—	—	—	202000	226600	83500	398
5.8	44900	2.5	252	35	**317ML3**	—	**BN200L4**	—	—	—	314300	333900	83400	408
6.1	42600	1.1	240	25.0	**314ML3**	—	**BN200L4**	—	—	—	132000	158300	49200	374
6.1	42800	1.4	241	30.0	**315ML3**	—	**BN200L4**	—	—	—	132000	158300	49200	386
6.5	38900	2.2	225	40	—	**315MR4**	**BN200L4**	—	—	—	132000	158300	48200	388
6.5	38900	2.2	225	45	—	**316MR4**	**BN200L4**	—	—	—	202000	226600	80300	400
6.7	37900	2.2	220	50	—	**317MR4**	**BN200L4**	—	—	—	314300	333900	79600	410
7.0	37100	1.1	209	18.0	**313ML3**	—	**BN200L4**	—	—	—	142000	166400	41700	362
7.1	36700	1.7	206	25.0	**314ML3**	—	**BN200L4**	—	—	—	132000	158300	46700	374
7.1	36800	2.1	207	30.0	**315ML3**	—	**BN200L4**	—	—	—	132000	158300	46800	386
7.1	36800	2.7	207	35	**316ML3**	—	**BN200L4**	—	—	—	202000	226600	78000	398
7.2	36100	1.0	203	18.0	**311ML3**	—	**BN200L4**	—	—	—	98000	100000	33600	350
7.6	34500	1.4	194	18.0	**313ML3**	—	**BN200L4**	—	—	—	142000	166400	40700	362
7.7	34000	0.9	191	18.0	**311ML3**	—	**BN200L4**	—	—	—	98000	100000	32900	350
8.1	32400	0.9	182	18.0	**313ML3**	—	**BN200L4**	—	—	—	142000	166400	39900	362
8.4	31300	1.3	176	18.0	**313ML3**	—	**BN200L4**	—	—	—	142000	166400	39400	362
8.4	31000	2.4	174	30.0	**315ML3**	—	**BN200L4**	—	—	—	132000	158300	44200	386
8.5	30900	2.0	174	25.0	**314ML3**	—	**BN200L4**	—	—	—	132000	158300	44200	374
8.6	30400	1.2	171	18.0	**311ML3**	—	**BN200L4**	—	—	—	98000	100000	31700	350
9.0	29100	0.9	164	18.0	**310ML3**	—	**BN200L4**	—	—	—	78000	98900	31300	338
9.0	29000	1.8	163	18.0	**313ML3**	—	**BN200L4**	—	—	—	142000	166400	38400	362
9.0	29200	2.0	164	25.0	**314ML3**	—	**BN200L4**	—	—	—	132000	158300	43300	374
9.1	28700	1.2	161	18.0	**311ML3**	—	**BN200L4**	—	—	—	98000	100000	31100	350
9.4	28000	1.7	157	55	—	**314MR3C**	**BN200L4**	—	—	—	132000	158300	42700	376
9.4	28000	2.1	157	90	—	**315MR3C**	**BN200L4**	—	—	—	132000	158300	42700	388
9.6	27200	1.1	153	40	—	**313MR3**	**BN200L4**	—	—	—	142000	166400	37600	364
9.7	26900	1.5	151	18.0	**313ML3**	—	**BN200L4**	—	—	—	142000	166400	37500	362
10.0	26200	1.3	147	18.0	**311ML3**	—	**BN200L4**	—	—	—	98000	100000	30200	350
10.0	26100	1.0	147	40	—	**311MR3**	**BN200L4**	—	—	—	97900	100000	30100	352
10.3	25400	1.6	143	18.0	**313ML3**	—	**BN200L4**	—	—	—	140800	165000	36800	362
10.6	24600	2.8	138	25.0	**314ML3**	—	**BN200L4**	—	—	—	129600	155400	40900	374
10.9	24100	1.1	135	18.0	**310ML3**	—	**BN200L4**	—	—	—	76100	96500	29300	338
10.9	24000	2.1	135	18.0	**313ML3**	—	**BN200L4**	—	—	—	138400	162100	36100	362
10.9	24100	2.5	135	55	—	**314MR3C**	**BN200L4**	—	—	—	128700	154400	40600	376
11.0	23700	1.5	133	18.0	**311ML3**	—	**BN200L4**	—	—	—	95100	100000	29200	350
11.6	22600	1.8	127	40	—	**313MR3**	**BN200L4**	—	—	—	135900	159300	35400	364
11.9	22000	1.6	124	40	—	**311MR3**	**BN200L4**	—	—	—	93000	100000	28500	352
12.2	21400	1.9	120	18.0	**313ML3**	—	**BN200L4**	—	—	—	133800	156800	34800	362
12.4	21200	1.0	119	18.0	**310ML3**	—	**BN200L4**	—	—	—	73200	92800	28100	338
12.8	20400	1.7	115	18.0	**311ML3**	—	**BN200L4**	—	—	—	90900	100000	27800	350
12.9	20300	2.9	114	55	—	**314MR3C**	**BN200L4**	—	—	—	122300	146600	38400	376
13.0	20200	2.3	113	55	—	**314MR3B**	**BN200L4**	—	—	—	122100	146500	38300	376
13.0	20200	2.9	113	75	—	**315MR3B**	**BN200L4**	—	—	—	122100	146500	38300	388
13.4	19500	2.3	110	18.0	**313ML3**	—	**BN200L4**	—	—	—	130100	152400	33700	362
13.6	19200	1.3	108	18.0	**310ML3**	—	**BN200L4**	—	—	—	71100	90100	27200	338
13.6	19200	2.9	108	25.0	**314ML3**	—	**BN200L4**	—	—	—	120300	144200	37700	374
13.7	19100	2.0	107	40	—	**313MR3**	**BN200L4**	—	—	—	129100	151300	33400	364
13.7	19200	2.9	108	55	—	**314MR3C**	**BN200L4**	—	—	—	120200	144200	37700	376
14.1	18500	1.8	104	40	—	**311MR3**	**BN200L4**	—	—	—	88400	100000	26900	352
14.2	18500	2.0	104	18.0	**311ML3**	—	**BN200L4**	—	—	—	88300	100000	26900	350
14.6	17900	1.2	101	18.0	**310ML3**	—	**BN200L4**	—	—	—	69700	88300	26600	338
15.1	17400	2.2	97.5	40	—	**313MR3**	**BN200L4**	—	—	—	125500	147100	32400	364
15.3	17100	1.7	96.3	40	—	**311MR3**	**BN200L4**	—	—	—	86300	100000	26200	352
15.9	16500	1.4	92.7	18.0	**310ML3**	—	**BN200L4**	—	—	—	67900	86100	25900	338
15.9	16500	2.7	92.4	18.0	**313ML3**	—	**BN200L4**	—	—	—	123600	144800	31800	362
16.5	15900	2.2	89.3	18.0	**311ML3**	—	**BN200L4**	—	—	—	84400	100000	25500	350
17.9	14600	2.2	82.2	40	—	**313MR3**	**BN200L4**	—	—	—	119300	139800	30600	364
18.1	14400	2.1	81.1	40	—	**311MR3**	**BN200L4**	—	—	—	82000	100000	24700	352

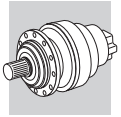

A

P_1 = 30 kW

n_2 min^{-1}	M_{n2} Nm	f_S	i	P_t kW					Rn_2 [N] MC	MZ	HC/PC	HZ/PZ	FZ	
18.3	14300	1.4	80.3	18.0	**310ML3**	**—**	**BN200L4**	**—**	—	—	65100	82500	24700	338
19.0	13800	2.4	77.3	18.0	**311ML3**	**—**	**BN200L4**	**—**	—	—	80800	100000	24400	350
19.9	13200	1.7	73.9	18.0	**310ML3**	**—**	**BN200L4**	**—**	—	—	63500	80500	24000	338
20.7	12700	2.6	71.1	18.0	**311ML3**	**—**	**BN200L4**	**—**	—	—	78800	100000	23700	350
21.0	12400	2.2	69.9	40	**—**	**313MR3**	**BN200L4**	**—**	—	—	113600	133200	29000	364
21.6	12100	2.2	68.0	40	**—**	**311MR3**	**BN200L4**	**—**	—	—	77800	99200	23300	352
23.0	11400	2.2	64.0	40	**—**	**313MR3**	**BN200L4**	**—**	—	—	110700	129700	28100	364
23.3	11300	2.2	63.2	40	**—**	**311MR3**	**BN200L4**	**—**	—	—	76100	97000	22800	352
23.5	11100	1.8	62.6	18.0	**310ML3**	**—**	**BN200L4**	**—**	—	—	60400	76600	22700	338
24.4	10700	2.9	60.2	18.0	**311ML3**	**—**	**BN200L4**	**—**	—	—	75000	95700	22400	350
27.4	9550	2.2	53.7	40	**—**	**313MR3**	**BN200L4**	**—**	—	—	105000	123000	26500	364
27.7	9440	2.0	53.0	18.0	**310ML3**	**—**	**BN200L4**	**—**	—	—	57400	72800	21500	338
27.7	9430	2.2	53.0	40	**—**	**311MR3**	**BN200L4**	**—**	—	—	72200	92000	21500	352
31	8570	1.0	46.7	18.0	**307L2**	**—**	**BN200L4**	**—**	20500	25600	47900	63000	14300	314
31	8570	1.5	46.7	18.0	**309L2**	**—**	**BN200L4**	**—**	—	—	48900	63000	11400	326
31	8570	2.1	46.7	22.0	**310ML2**	**—**	**BN200L4**	**—**	—	—	55300	70100	20600	338
38	7050	0.9	38.4	13.0	**306L2**	**—**	**BN200L4**	**—**	16000	18200	38100	44000	10400	302
38	7090	1.2	38.6	18.0	**307L2**	**—**	**BN200L4**	**—**	19200	24000	45200	59500	13400	314
38	7090	1.8	38.6	18.0	**309L2**	**—**	**BN200L4**	**—**	—	—	46200	59500	10700	326
38	7090	2.5	38.6	22.0	**310ML2**	**—**	**BN200L4**	**—**	—	—	52200	66200	19300	338
44	6070	1.1	33.1	13.0	**306L2**	**—**	**BN200L4**	**—**	15200	17300	36400	42100	9880	302
45	5970	1.6	32.6	18.0	**307L2**	**—**	**BN200L4**	**—**	18100	22700	42900	56500	12600	314
45	5970	2.2	32.6	18.0	**309L2**	**—**	**BN200L4**	**—**	—	—	43900	56500	10100	326
48	5630	1.7	30.7	18.0	**307L2**	**—**	**BN200L4**	**—**	17800	22200	42200	55500	12400	314
52	5220	1.3	28.4	13.0	**306L2**	**—**	**BN200L4**	**—**	14500	16500	34800	40200	9400	302
53	5140	1.8	28.0	18.0	**307L2**	**—**	**BN200L4**	**—**	17300	21600	41000	54000	12000	314
53	5140	2.5	28.0	18.0	**309L2**	**—**	**BN200L4**	**—**	—	—	42000	54000	9610	326
56	4830	1.3	26.4	13.0	**306L2**	**—**	**BN200L4**	**—**	14100	16100	34000	39300	9160	302
58	4650	2.0	25.4	18.0	**307L2**	**—**	**BN200L4**	**—**	16700	20900	39800	52400	11600	314
58	4650	2.3	25.4	18.0	**309L2**	**—**	**BN200L4**	**—**	—	—	40700	52400	9300	326
62	4320	1.9	23.5	35	**—**	**307R2**	**BN200L4**	**—**	16300	20400	39000	51300	11300	316
62	4320	2.2	23.5	35	**—**	**309R2**	**BN200L4**	**—**	—	—	39800	51300	9070	328
65	4160	1.5	22.7	13.0	**306L2**	**—**	**BN200L4**	**—**	13400	15300	32500	37600	8710	302
67	4000	2.2	21.8	18.0	**307L2**	**—**	**BN200L4**	**—**	15900	19900	38100	50100	11100	314
67	4000	2.5	21.8	18.0	**309L2**	**—**	**BN200L4**	**—**	—	—	38900	50100	8850	326
74	3640	2.2	19.8	35	**—**	**307R2**	**BN200L4**	**—**	15400	19200	37000	48700	10700	316
74	3640	2.2	19.8	35	**—**	**309R2**	**BN200L4**	**—**	—	—	37800	48700	8570	328
81	3310	1.8	18.1	13.0	**306L2**	**—**	**BN200L4**	**—**	12400	14200	30400	35100	8080	302
85	3190	2.6	17.4	18.0	**307L2**	**—**	**BN200L4**	**—**	14700	18400	35600	46800	10300	314
95	2840	2.2	15.5	35	**—**	**307R2**	**BN200L4**	**—**	14200	17700	34300	45200	9860	316
95	2840	2.2	15.5	35	**—**	**309R2**	**BN200L4**	**—**	—	—	35100	45200	7890	328
96	2810	1.8	15.3	13.0	**306L2**	**—**	**BN200L4**	**—**	11800	13400	28900	33400	7640	302
100	2700	2.9	14.7	18.0	**307L2**	**—**	**BN200L4**	**—**	13900	17400	33800	44500	9700	314
113	2380	2.0	13.0	13.0	**306L2**	**—**	**BN200L4**	**—**	11100	12700	27500	31800	7230	302
113	2380	2.2	13.0	35	**—**	**307R2**	**BN200L4**	**—**	13300	16700	32600	42800	9290	316
113	2380	2.2	13.0	35	**—**	**309R2**	**BN200L4**	**—**	0	0	33300	42800	7440	328
196	1420	1.6	7.50	13.0	**305L1**	**—**	**BN200L4**	**—**	7790	8900	16600	19700	4130	290
196	1420	2.9	7.50	18.0	**306L1**	**—**	**BN200L4**	**—**	9270	10600	23300	26900	6030	302
224	1240	1.5	6.57	12.0	**304L1**	**—**	**BN200L4**	**—**	7450	8520	15900	18900	3950	278
237	1170	1.2	6.20	11.0	**303L1**	**—**	**BN200L4**	**—**	7310	8350	15700	18600	3880	266
237	1170	2.3	6.20	13.0	**305L1**	**—**	**BN200L4**	**—**	7310	8350	15700	18600	3880	290
276	1010	1.5	5.33	11.0	**303L1**	**—**	**BN200L4**	**—**	6950	7950	15000	17700	3690	266
276	1010	2.0	5.33	12.0	**304L1**	**—**	**BN200L4**	**—**	6950	7950	15000	17700	3690	278
276	1010	2.6	5.33	13.0	**305L1**	**—**	**BN200L4**	**—**	6950	7950	15000	17700	3690	290
346	800	1.8	4.25	11.0	**303L1**	**—**	**BN200L4**	**—**	6450	7370	14000	16600	3420	266
346	800	2.4	4.25	12.0	**304L1**	**—**	**BN200L4**	**—**	6450	7370	14000	16600	3420	278
408	680	2.0	3.60	11.0	**303L1**	**—**	**BN200L4**	**—**	6100	6970	13300	15800	3230	266
408	680	2.7	3.60	12.0	**304L1**	**—**	**BN200L4**	**—**	6100	6970	13300	15800	3230	278

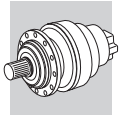

P_1 = 37 kW

n_2 min^{-1}	M_{n2} Nm	f_S	i	P_t kW					Rn_2 [N] MC	MZ	HC/PC	HZ/PZ	FZ	
1.1	293800	1.1	1389	30.0	**319L4**	—	**IEC225S4**	—	—	—	453100	498800	195800	428
1.2	252700	1.4	1195	30.0	**319L4**	—	**IEC225S4**	—	—	—	443400	488200	186200	428
1.3	237300	2.2	1122	35	**321L4**	—	**IEC225S4**	—	—	—	621600	739900	1104200	438
1.4	224100	1.2	1059	22.0	**318ML4**	—	**IEC225S4**	—	—	—	358700	405000	178900	418
1.5	213000	1.6	1007	30.0	**319L4**	—	**IEC225S4**	—	—	—	432700	476400	175900	428
1.6	192800	1.4	911	22.0	**318ML4**	—	**IEC225S4**	—	—	—	351100	396400	170100	418
1.6	192900	1.7	912	30.0	**319L4**	—	**IEC225S4**	—	—	—	426600	469700	170200	428
1.6	191800	1.7	906	115	—	**319R4C**	**IEC225S4**	—	—	—	426300	469300	169800	430
1.6	199900	2.9	945	35	**321L4**	—	**IEC225S4**	—	—	—	606600	722000	1048900	438
1.7	180000	2.2	850	30.0	**319L4**	—	**IEC225S4**	—	—	—	422400	465100	166300	428
1.8	169700	1.9	802	30.0	**319L4**	—	**IEC225S4**	—	—	—	418900	461200	163100	428
1.9	162400	1.7	768	22.0	**318ML4**	—	**IEC225S4**	—	—	—	342600	386800	160700	418
1.9	165000	1.9	780	115	—	**319R4C**	**IEC225S4**	—	—	—	417200	459400	161500	430
2.0	153600	1.7	726	22.0	**318ML4**	—	**IEC225S4**	—	—	—	339900	383800	157700	418
2.1	146300	1.8	691	110	—	**318MR4C**	**IEC225S4**	—	—	—	337500	381100	155200	420
2.1	151600	2.6	717	30.0	**319L4**	—	**IEC225S4**	—	—	—	412200	453900	157100	428
2.2	143400	2.7	678	30.0	**319L4**	—	**IEC225S4**	—	—	—	408900	450300	154200	428
2.3	136900	1.9	647	22.0	**318ML4**	—	**IEC225S4**	—	—	—	334300	377500	151800	418
2.3	138500	2.2	655	95	—	**319R4B**	**IEC225S4**	—	—	—	406900	448000	152400	430
2.3	139000	2.2	657	115	—	**319R4C**	**IEC225S4**	—	—	—	407100	448300	152600	430
2.4	129400	2.0	612	22.0	**318ML4**	—	**IEC225S4**	—	—	—	331700	374500	149000	418
2.4	132200	2.3	625	30.0	**319L4**	—	**IEC225S4**	—	—	—	404200	445100	150000	428
2.5	125800	2.1	595	110	—	**318MR4C**	**IEC225S4**	—	—	—	330300	373000	147600	420
2.6	119200	2.5	563	95	—	**319R4B**	**IEC225S4**	—	—	—	398300	438500	144900	430
2.9	109100	2.3	515	22.0	**318ML4**	—	**IEC225S4**	—	—	—	323700	365400	140700	418
2.9	109000	2.7	515	30.0	**319L4**	—	**IEC225S4**	—	—	—	393200	432900	140700	428
3.0	105600	2.4	499	90	—	**318MR4B**	**IEC225S4**	—	—	—	322200	363800	139200	420
3.0	106000	2.4	501	110	—	**318MR4C**	**IEC225S4**	—	—	—	322300	364000	139400	420
3.1	100900	2.5	477	22.0	**318ML4**	—	**IEC225S4**	—	—	—	320100	361400	137100	418
3.1	100300	2.5	474	110	—	**318MR4C**	**IEC225S4**	—	—	—	319800	361100	136800	420
3.1	100400	2.9	475	95	—	**319R4B**	**IEC225S4**	—	—	—	388600	427900	136900	430
3.4	90900	2.7	430	90	—	**318MR4B**	**IEC225S4**	—	—	—	315300	356000	132400	420
3.5	89400	2.8	422	22.0	**318ML4**	—	**IEC225S4**	—	—	—	314600	355200	131700	418
3.7	85000	2.9	402	22.0	**318ML4**	—	**IEC225S4**	—	—	—	312300	352600	129500	418
3.7	84500	2.9	399	110	—	**318MR4C**	**IEC225S4**	—	—	—	312100	352300	129200	420
5.9	55000	2.1	252	35	**317ML3**	—	**IEC225S4**	—	—	—	314300	333900	83200	408
6.1	52500	1.1	241	30.0	**315ML3**	—	**IEC225S4**	—	—	—	132000	158300	49100	386
6.2	52200	0.9	240	25.0	**314ML3**	—	**IEC225S4**	—	—	—	132000	158300	49000	374
7.1	45200	1.7	207	30.0	**315ML3**	—	**IEC225S4**	—	—	—	132000	158300	46700	386
7.1	45200	2.2	207	35	**316ML3**	—	**IEC225S4**	—	—	—	202000	226600	77900	398
7.2	44900	1.4	206	25.0	**314ML3**	—	**IEC225S4**	—	—	—	132000	158300	46600	374
8.5	37900	1.6	174	25.0	**314ML3**	—	**IEC225S4**	—	—	—	132000	158300	44100	374
8.5	38100	2.0	174	30.0	**315ML3**	—	**IEC225S4**	—	—	—	132000	158300	44100	386
8.5	38100	2.6	174	35	**316ML3**	—	**IEC225S4**	—	—	—	202000	226600	73500	398
9.0	35800	1.7	164	25.0	**314ML3**	—	**IEC225S4**	—	—	—	132000	158300	43200	374
9.0	36000	2.5	165	30.0	**315ML3**	—	**IEC225S4**	—	—	—	132000	158300	43300	386
9.4	34300	1.4	157	55	—	**314MR3C**	**IEC225S4**	—	—	—	132000	158300	42600	376
9.4	34300	1.7	157	90	—	**315MR3C**	**IEC225S4**	—	—	—	132000	158300	42600	388
10.6	30300	2.9	139	30.0	**315ML3**	—	**IEC225S4**	—	—	—	129500	155400	40900	386
10.7	30200	2.3	138	25.0	**314ML3**	—	**IEC225S4**	—	—	—	129400	155100	40800	374
11.0	29500	2.0	135	55	—	**314MR3C**	**IEC225S4**	—	—	—	128400	154000	40500	376
11.0	29500	2.5	135	90	—	**315MR3C**	**IEC225S4**	—	—	—	128400	154000	40500	388
13.0	24800	1.9	113	55	—	**314MR3B**	**IEC225S4**	—	—	—	121900	146200	38200	376
13.0	24800	2.3	114	55	—	**314MR3C**	**IEC225S4**	—	—	—	122000	146300	38300	376
13.0	24800	2.4	113	75	—	**315MR3B**	**IEC225S4**	—	—	—	121900	146200	38200	388
13.0	24800	2.9	114	90	—	**315MR3C**	**IEC225S4**	—	—	—	122000	146300	38300	388
13.7	23500	2.3	108	25.0	**314ML3**	—	**IEC225S4**	—	—	—	120000	143900	37600	374

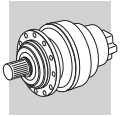

A

P_1 = 37 kW

n_2 min^{-1}	M_{n2} Nm	f_S	i	P_t kW					Rn_2 [N] MC	MZ	HC/PC	HZ/PZ	FZ	
13.7	23500	2.4	108	55	—	**314MR3C**	**IEC225S4**	—	—	—	120000	143900	37600	376
15.2	21300	2.7	97.6	55	—	**314MR3B**	**IEC225S4**	—	—	—	116500	139700	36400	376
16.0	20200	2.6	92.7	25.0	**314ML3**	—	**IEC225S4**	—	—	—	114700	137600	35700	374
32	10500	1.7	46.7	22.0	**310ML2**	—	**IEC225S4**	—	—	—	55200	70000	20500	338
38	8690	2.1	38.6	22.0	**310ML2**	—	**IEC225S4**	—	—	—	52100	66100	19300	338
45	7320	2.8	32.6	22.0	**310ML2**	—	**IEC225S4**	—	—	—	49500	62800	18200	338
48	6900	2.5	30.7	22.0	**310ML2**	—	**IEC225S4**	—	—	—	48600	61700	17900	338
58	5700	2.9	25.4	22.0	**310ML2**	—	**IEC225S4**	—	—	—	45900	58300	16800	338
197	1740	2.4	7.50	18.0	**306L1**	—	**IEC225S4**	—	9250	10500	23300	26900	6010	302
239	1440	2.9	6.20	18.0	**306L1**	—	**IEC225S4**	—	8680	9900	22000	25400	5640	302

P_1 = 45 kW

n_2 min^{-1}	M_{n2} Nm	f_S	i	P_t kW					Rn_2 [N] MC	MZ	HC/PC	HZ/PZ	FZ	
1.1	356500	0.9	1389	30.0	**319L4**	—	**IEC225M4**	—	—	—	453100	498800	195800	428
1.2	306700	1.1	1195	30.0	**319L4**	—	**IEC225M4**	—	—	—	443400	488200	186200	428
1.2	328500	2.7	1279	50	**323L4**	—	**IEC225M4**	—	—	—	—	—	1053000	448
1.2	328500	2.9	1279	65	**325L4**	—	**IEC225M4**	—	—	—	—	—	1340200	452
1.3	287900	1.8	1122	35	**321L4**	—	**IEC225M4**	—	—	—	621600	739900	1104200	438
1.4	271900	1.0	1059	22.0	**318ML4**	—	**IEC225M4**	—	—	—	358700	405000	178900	418
1.5	258400	1.3	1007	30.0	**319L4**	—	**IEC225M4**	—	—	—	432700	476400	175900	428
1.6	233900	1.2	911	22.0	**318ML4**	—	**IEC225M4**	—	—	—	351100	396400	170100	418
1.6	234100	1.4	912	30.0	**319L4**	—	**IEC225M4**	—	—	—	426600	469700	170200	428
1.6	232700	1.4	906	115	—	**319R4C**	**IEC225M4**	—	—	—	426300	469300	169800	430
1.6	242600	2.4	945	35	**321L4**	—	**IEC225M4**	—	—	—	606600	722000	1048900	438
1.7	218400	1.9	850	30.0	**319L4**	—	**IEC225M4**	—	—	—	422400	465100	166300	428
1.8	205900	1.6	802	30.0	**319L4**	—	**IEC225M4**	—	—	—	418900	461200	163100	428
1.9	197100	1.4	768	22.0	**318ML4**	—	**IEC225M4**	—	—	—	342600	386800	160700	418
1.9	200200	1.6	780	115	—	**319R4C**	**IEC225M4**	—	—	—	417200	459400	161500	430
1.9	204400	2.7	796	35	**321L4**	—	**IEC225M4**	—	—	—	591900	704600	996400	438
2.0	186400	1.4	726	22.0	**318ML4**	—	**IEC225M4**	—	—	—	339900	383800	157700	418
2.0	189100	2.9	736	35	**321L4**	—	**IEC225M4**	—	—	—	585400	696800	973300	438
2.0	187900	2.8	732	125	—	**321R4C**	**IEC225M4**	—	—	—	584900	696200	971500	440
2.1	177500	1.5	691	110	—	**318MR4C**	**IEC225M4**	—	—	—	337500	381100	155200	420
2.1	184000	2.2	717	30.0	**319L4**	—	**IEC225M4**	—	—	—	412200	453900	157100	428
2.2	174000	2.2	678	30.0	**319L4**	—	**IEC225M4**	—	—	—	408900	450300	154200	428
2.3	166100	1.6	647	22.0	**318ML4**	—	**IEC225M4**	—	—	—	334300	377500	151800	418
2.3	168100	1.8	655	95	—	**319R4B**	**IEC225M4**	—	—	—	406900	448000	152400	430
2.3	168700	1.8	657	115	—	**319R4C**	**IEC225M4**	—	—	—	407100	448300	152600	430
2.4	157000	1.7	612	22.0	**318ML4**	—	**IEC225M4**	—	—	—	331700	374500	149000	418
2.4	160500	1.9	625	30.0	**319L4**	—	**IEC225M4**	—	—	—	404200	445100	150000	428
2.5	152700	1.7	595	110	—	**318MR4C**	**IEC225M4**	—	—	—	330300	373000	147600	420
2.6	146600	2.6	571	30.0	**319L4**	—	**IEC225M4**	—	—	—	399100	439400	145600	428
2.6	144600	2.1	563	95	—	**319R4B**	**IEC225M4**	—	—	—	398300	438500	144900	430
2.7	143400	2.6	558	30.0	**319L4**	—	**IEC225M4**	—	—	—	397800	438000	144500	428
2.7	142500	2.6	555	115	—	**319R4C**	**IEC225M4**	—	—	—	397400	437600	144200	430
2.8	135600	2.7	528	30.0	**319L4**	—	**IEC225M4**	—	—	—	394600	434500	141900	428
2.8	134800	2.7	525	115	—	**319R4C**	**IEC225M4**	—	—	—	394300	434100	141600	430
2.9	132300	1.9	515	22.0	**318ML4**	—	**IEC225M4**	—	—	—	323700	365400	140700	418
2.9	132200	2.3	515	30.0	**319L4**	—	**IEC225M4**	—	—	—	393200	432900	140700	428
3.0	128200	1.9	499	90	—	**318MR4B**	**IEC225M4**	—	—	—	322200	363800	139200	420
3.0	128600	2.0	501	110	—	**318MR4C**	**IEC225M4**	—	—	—	322300	364000	139400	420
3.1	122400	2.1	477	22.0	**318ML4**	—	**IEC225M4**	—	—	—	320100	361400	137100	418

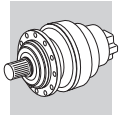

P_1 = 45 kW

n_2 min^{-1}	M_{n2} Nm	f_S	i	P_t kW					Rn_2 [N] MC	MZ	HC/PC	HZ/PZ	FZ	
3.1	121600	2.1	474	110	—	**318MR4C**	**IEC225M4**	—	—	—	319800	361100	136800	420
3.1	121800	2.4	475	95	—	**319R4B**	**IEC225M4**	—	—	—	388600	427900	136900	430
3.4	110300	2.2	430	90	—	**318MR4B**	**IEC225M4**	—	—	—	315300	356000	132400	420
3.5	108400	2.3	422	22.0	**318ML4**	—	**IEC225M4**	—	—	—	314600	355200	131700	418
3.6	105300	2.7	410	30.0	**319L4**	—	**IEC225M4**	—	—	—	380700	419100	130400	428
3.7	103100	2.4	402	22.0	**318ML4**	—	**IEC225M4**	—	—	—	312300	352600	129500	418
3.7	102500	2.4	399	110	—	**318MR4C**	**IEC225M4**	—	—	—	312100	352300	129200	420
4.1	92900	2.6	362	90	—	**318MR4B**	**IEC225M4**	—	—	—	307700	347400	125100	420
4.3	87900	2.7	342	90	—	**318MR4B**	**IEC225M4**	—	—	—	305300	344700	122800	420
4.4	86400	2.7	337	22.0	**318ML4**	—	**IEC225M4**	—	—	—	304500	343900	122100	418
4.7	80300	2.9	313	22.0	**318ML4**	—	**IEC225M4**	—	—	—	301400	340300	119200	418
4.8	79900	2.9	311	110	—	**318MR4C**	**IEC225M4**	—	—	—	301100	340000	118900	420
5.9	66800	1.7	252	35	**317ML3**	—	**IEC225M4**	—	—	—	314300	333900	83200	408
6.1	63700	0.9	241	30.0	**315ML3**	—	**IEC225M4**	—	—	—	132000	158300	49100	386
7.0	56300	2.6	213	35	**317ML3**	—	**IEC225M4**	—	—	—	314300	333900	78600	408
7.1	54800	1.4	207	30.0	**315ML3**	—	**IEC225M4**	—	—	—	132000	158300	46700	386
7.1	54800	1.8	207	35	**316ML3**	—	**IEC225M4**	—	—	—	202000	226600	77900	398
7.2	54500	1.1	206	25.0	**314ML3**	—	**IEC225M4**	—	—	—	132000	158300	46600	374
8.5	45900	1.3	174	25.0	**314ML3**	—	**IEC225M4**	—	—	—	132000	158300	44100	374
8.5	46200	1.6	174	30.0	**315ML3**	—	**IEC225M4**	—	—	—	132000	158300	44100	386
8.5	46200	2.2	174	35	**316ML3**	—	**IEC225M4**	—	—	—	202000	226600	73500	398
8.9	43900	2.8	166	35	**317ML3**	—	**IEC225M4**	—	—	—	314300	333900	72300	408
9.0	43500	1.4	164	25.0	**314ML3**	—	**IEC225M4**	—	—	—	132000	158300	43200	374
9.0	43700	2.1	165	30.0	**315ML3**	—	**IEC225M4**	—	—	—	132000	158300	43300	386
9.0	43700	2.6	165	35	**316ML3**	—	**IEC225M4**	—	—	—	202000	226600	72200	398
9.0	43600	2.6	165	100	—	**317MR3C**	**IEC225M4**	—	—	—	314300	333900	72100	410
9.4	41600	1.1	157	55	—	**314MR3C**	**IEC225M4**	—	—	—	132000	158300	42600	376
9.4	41600	1.4	157	90	—	**315MR3C**	**IEC225M4**	—	—	—	132000	158300	42600	388
10.6	36800	2.4	139	30.0	**315ML3**	—	**IEC225M4**	—	—	—	129500	155400	40900	386
10.7	36600	1.9	138	25.0	**314ML3**	—	**IEC225M4**	—	—	—	129400	155100	40800	374
11.0	35800	1.7	135	55	—	**314MR3C**	**IEC225M4**	—	—	—	128400	154000	40500	376
11.0	35800	2.1	135	90	—	**315MR3C**	**IEC225M4**	—	—	—	128400	154000	40500	388
11.0	35800	2.7	135	90	—	**316MR3C**	**IEC225M4**	—	—	—	196600	220500	67500	400
13.0	30000	1.6	113	55	—	**314MR3B**	**IEC225M4**	—	—	—	121900	146200	38200	376
13.0	30100	1.9	114	55	—	**314MR3C**	**IEC225M4**	—	—	—	122000	146300	38300	376
13.0	30000	2.0	113	75	—	**315MR3B**	**IEC225M4**	—	—	—	121900	146200	38200	388
13.0	30100	2.4	114	90	—	**315MR3C**	**IEC225M4**	—	—	—	122000	146300	38300	388
13.7	28500	1.9	108	25.0	**314ML3**	—	**IEC225M4**	—	—	—	120000	143900	37600	374
13.7	28500	2.0	108	55	—	**314MR3C**	**IEC225M4**	—	—	—	120000	143900	37600	376
13.7	28700	2.9	108	30.0	**315ML3**	—	**IEC225M4**	—	—	—	120200	144200	37600	386
13.7	28500	2.9	108	90	—	**315MR3C**	**IEC225M4**	—	—	—	120000	143900	37600	388
15.2	25800	2.2	97.6	55	—	**314MR3B**	**IEC225M4**	—	—	—	116500	139700	36400	376
15.2	25800	2.8	97.6	75	—	**315MR3B**	**IEC225M4**	—	—	—	116500	139700	36400	388
16.0	24500	2.2	92.7	25.0	**314ML3**	—	**IEC225M4**	—	—	—	114700	137600	35700	374
16.3	24000	2.6	90.7	55	—	**314MR3C**	**IEC225M4**	—	—	—	114000	136700	35500	376
18.0	21800	2.5	82.3	55	—	**314MR3B**	**IEC225M4**	—	—	—	110700	132700	34300	376
19.0	20600	2.6	77.8	55	—	**314MR3B**	**IEC225M4**	—	—	—	108800	130500	33700	376
20.0	19600	2.6	73.9	25.0	**314ML3**	—	**IEC225M4**	—	—	—	107200	128500	33100	374
20.9	18700	2.6	70.7	55	—	**314MR3C**	**IEC225M4**	—	—	—	105800	126800	32700	376
22.6	17300	2.9	65.5	55	—	**314MR3B**	**IEC225M4**	—	—	—	103400	124000	31800	376
23.6	16600	3.0	62.6	25.0	**314ML3**	—	**IEC225M4**	—	—	—	102000	122300	31400	374
29.0	13500	2.9	51.1	55	—	**314MR3B**	**IEC225M4**	—	—	—	95900	115000	29300	376
32	12800	1.4	46.7	22.0	**310ML2**	—	**IEC225M4**	—	—	—	55200	70000	20500	338
37	11100	2.7	40.5	30.0	**313ML2**	—	**IEC225M4**	—	—	—	96300	112800	24100	362
38	10500	1.7	38.6	22.0	**310ML2**	—	**IEC225M4**	—	—	—	52100	66100	19300	338
38	10600	2.6	38.8	26.0	**311ML2**	—	**IEC225M4**	—	—	—	65600	83700	19300	350
45	8880	2.3	32.6	22.0	**310ML2**	—	**IEC225M4**	—	—	—	49500	62800	18200	338

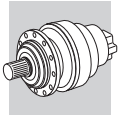

A

P_1 = 45 kW

n_2 min^{-1}	M_{n2} Nm	f_S	i	P_t kW					Rn_2 [N] MC	MZ	HC/PC	HZ/PZ	FZ	
48	8370	2.1	30.7	22.0	**310ML2**	—	**IEC225M4**	—	—	—	48600	61700	17900	338
53	7640	2.7	28.0	22.0	**310ML2**	—	**IEC225M4**	—	—	—	47300	60000	17300	338
58	6920	2.4	25.4	22.0	**310ML2**	—	**IEC225M4**	—	—	—	45900	58300	16800	338
58	6910	2.5	25.3	55	—	**310MR2C**	**IEC225M4**	—	—	—	45900	58200	16800	340
68	5950	2.7	21.8	22.0	**310ML2**	—	**IEC225M4**	—	—	—	43900	55700	15900	338
197	2110	1.9	7.50	18.0	**306L1**	—	**IEC225M4**	—	9250	10500	23300	26900	6010	302
239	1740	2.4	6.20	18.0	**306L1**	—	**IEC225M4**	—	8680	9900	22000	25400	5640	302
278	1500	2.7	5.33	18.0	**306L1**	—	**IEC225M4**	—	8260	9410	21000	24300	5370	302

P_1 = 55 kW

n_2 min^{-1}	M_{n2} Nm	f_S	i	P_t kW					Rn_2 [N] MC	MZ	HC/PC	HZ/PZ	FZ	
1.2	375400	0.9	1195	30.0	**319L4**	—	**IEC250M4**	—	—	—	443400	488200	186200	428
1.2	402100	2.2	1279	50	**323L4**	—	**IEC250M4**	—	—	—	—	—	1053000	448
1.2	402100	2.4	1279	65	**325L4**	—	**IEC250M4**	—	—	—	—	—	1340200	452
1.3	352500	1.5	1122	35	**321L4**	—	**IEC250M4**	—	—	—	621600	739900	1104200	438
1.3	345900	2.5	1101	50	**323L4**	—	**IEC250M4**	—	—	—	—	—	1006500	448
1.3	345900	2.8	1101	65	**325L4**	—	**IEC250M4**	—	—	—	—	—	1281000	452
1.4	322200	2.7	1025	50	**323L4**	—	**IEC250M4**	—	—	—	—	—	985300	448
1.5	316300	1.1	1007	30.0	**319L4**	—	**IEC250M4**	—	—	—	432700	476400	175900	428
1.6	286300	1.0	911	22.0	**318ML4**	—	**IEC250M4**	—	—	—	351100	396400	170100	418
1.6	286500	1.1	912	30.0	**319L4**	—	**IEC250M4**	—	—	—	426600	469700	170200	428
1.6	284800	1.1	906	115	—	**319R4C**	**IEC250M4**	—	—	—	426300	469300	169800	430
1.6	297000	2.0	945	35	**321L4**	—	**IEC250M4**	—	—	—	606600	722000	1048900	438
1.7	267300	1.5	850	30.0	**319L4**	—	**IEC250M4**	—	—	—	422400	465100	166300	428
1.8	252100	1.3	802	30.0	**319L4**	—	**IEC250M4**	—	—	—	418900	461200	163100	428
1.9	241300	1.1	768	22.0	**318ML4**	—	**IEC250M4**	—	—	—	342600	386800	160700	418
1.9	245000	1.3	780	115	—	**319R4C**	**IEC250M4**	—	—	—	417200	459400	161500	430
1.9	250200	2.2	796	35	**321L4**	—	**IEC250M4**	—	—	—	591900	704600	996400	438
2.0	228200	1.2	726	22.0	**318ML4**	—	**IEC250M4**	—	—	—	339900	383800	157700	418
2.0	231400	2.4	736	35	**321L4**	—	**IEC250M4**	—	—	—	585400	696800	973300	438
2.0	230100	2.3	732	125	—	**321R4C**	**IEC250M4**	—	—	—	584900	696200	971500	440
2.1	217200	1.2	691	110	—	**318MR4C**	**IEC250M4**	—	—	—	337500	381100	155200	420
2.1	225200	1.8	717	30.0	**319L4**	—	**IEC250M4**	—	—	—	412200	453900	157100	428
2.2	213000	1.8	678	30.0	**319L4**	—	**IEC250M4**	—	—	—	408900	450300	154200	428
2.3	203300	1.3	647	22.0	**318ML4**	—	**IEC250M4**	—	—	—	334300	377500	151800	418
2.3	205800	1.5	655	95	—	**319R4B**	**IEC250M4**	—	—	—	406900	448000	152400	430
2.3	206500	1.5	657	115	—	**319R4C**	**IEC250M4**	—	—	—	407100	448300	152600	430
2.4	192200	1.4	612	22.0	**318ML4**	—	**IEC250M4**	—	—	—	331700	374500	149000	418
2.4	196400	1.6	625	30.0	**319L4**	—	**IEC250M4**	—	—	—	404200	445100	150000	428
2.4	192300	2.7	612	35	**321L4**	—	**IEC250M4**	—	—	—	570100	678500	920600	438
2.4	193800	2.6	617	125	—	**321R4C**	**IEC250M4**	—	—	—	570700	679300	922900	440
2.5	186900	1.4	595	110	—	**318MR4C**	**IEC250M4**	—	—	—	330300	373000	147600	420
2.6	179500	2.1	571	30.0	**319L4**	—	**IEC250M4**	—	—	—	399100	439400	145600	428
2.6	177000	1.7	563	95	—	**319R4B**	**IEC250M4**	—	—	—	398300	438500	144900	430
2.7	175500	2.1	558	30.0	**319L4**	—	**IEC250M4**	—	—	—	397800	438000	144500	428
2.7	174500	2.2	555	115	—	**319R4C**	**IEC250M4**	—	—	—	397400	437600	144200	430
2.8	166000	2.2	528	30.0	**319L4**	—	**IEC250M4**	—	—	—	394600	434500	141900	428
2.8	165000	2.2	525	115	—	**319R4C**	**IEC250M4**	—	—	—	394300	434100	141600	430
2.8	166200	2.9	529	105	—	**321R4B**	**IEC250M4**	—	—	—	558300	664600	881200	440
2.9	162000	1.6	515	22.0	**318ML4**	—	**IEC250M4**	—	—	—	323700	365400	140700	418
2.9	161800	1.8	515	30.0	**319L4**	—	**IEC250M4**	—	—	—	393200	432900	140700	428
2.9	161000	2.6	512	125	—	**321R4C**	**IEC250M4**	—	—	—	555800	661600	872900	440

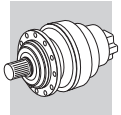

P_1 = 55 kW

n_2 min^{-1}	M_{n2} Nm	f_S	i	P_t kW					Rn_2 [N] MC	MZ	HC/PC	HZ/PZ	FZ	
3.0	156900	1.6	499	90	—	**318MR4B**	**IEC250M4**	—	—	—	322200	363800	139200	420
3.0	157500	1.6	501	110	—	**318MR4C**	**IEC250M4**	—	—	—	322300	364000	139400	420
3.1	149800	1.7	477	22.0	**318ML4**	—	**IEC250M4**	—	—	—	320100	361400	137100	418
3.1	148900	1.7	474	110	—	**318MR4C**	**IEC250M4**	—	—	—	319800	361100	136800	420
3.1	149100	2.0	475	95	—	**319R4B**	**IEC250M4**	—	—	—	388600	427900	136900	430
3.1	151000	2.6	481	125	—	**321R4C**	**IEC250M4**	—	—	—	550700	655600	856300	440
3.3	139800	2.5	445	30.0	**319L4**	—	**IEC250M4**	—	—	—	385100	424000	134000	428
3.3	139000	2.5	442	115	—	**319R4C**	**IEC250M4**	—	—	—	384800	423600	133700	430
3.3	140000	2.9	446	105	—	**321R4B**	**IEC250M4**	—	—	—	544800	648500	837100	440
3.4	135000	1.8	430	90	—	**318MR4B**	**IEC250M4**	—	—	—	315300	356000	132400	420
3.5	132800	1.9	422	22.0	**318ML4**	—	**IEC250M4**	—	—	—	314600	355200	131700	418
3.6	129000	2.2	410	30.0	**319L4**	—	**IEC250M4**	—	—	—	380700	419100	130400	428
3.7	126200	1.9	402	22.0	**318ML4**	—	**IEC250M4**	—	—	—	312300	352600	129500	418
3.7	125500	1.9	399	110	—	**318MR4C**	**IEC250M4**	—	—	—	312100	352300	129200	420
3.7	126000	2.7	401	95	—	**319R4B**	**IEC250M4**	—	—	—	379400	417700	129400	430
3.7	125500	2.6	399	125	—	**321R4C**	**IEC250M4**	—	—	—	536300	638400	810000	440
3.9	119200	2.8	379	95	—	**319R4B**	**IEC250M4**	—	—	—	376400	414400	127000	430
4.0	116300	2.9	370	105	—	**321R4B**	**IEC250M4**	—	—	—	530600	631500	791800	440
4.1	113700	2.1	362	90	—	**318MR4B**	**IEC250M4**	—	—	—	307700	347400	125100	420
4.3	107600	2.2	342	90	—	**318MR4B**	**IEC250M4**	—	—	—	305300	344700	122800	420
4.3	108300	2.7	345	115	—	**319R4C**	**IEC250M4**	—	—	—	371300	408800	123100	430
4.3	109100	3.0	347	105	—	**321R4B**	**IEC250M4**	—	—	—	525700	625800	776700	440
4.4	105800	2.2	337	22.0	**318ML4**	—	**IEC250M4**	—	—	—	304500	343900	122100	418
4.6	100400	3.0	320	95	—	**319R4B**	**IEC250M4**	—	—	—	367300	404400	120000	430
4.7	98400	2.4	313	22.0	**318ML4**	—	**IEC250M4**	—	—	—	301400	340300	119200	418
4.8	97800	2.4	311	110	—	**318MR4C**	**IEC250M4**	—	—	—	301100	340000	118900	420
4.8	96300	2.6	306	125	—	**321R4C**	**IEC250M4**	—	—	—	516400	614700	748100	440
5.1	90600	2.6	288	90	—	**318MR4B**	**IEC250M4**	—	—	—	299000	337600	115900	420
5.1	90600	2.9	288	105	—	**321R4B**	**IEC250M4**	—	—	—	513900	611700	734700	440
5.6	82400	2.8	262	22.0	**318ML4**	—	**IEC250M4**	—	—	—	299000	337600	112300	418
5.9	81800	1.4	252	35	**317ML3**	—	**IEC250M4**	—	—	—	314300	333900	83200	408
5.9	78200	3.0	249	95	—	**319R4B**	**IEC250M4**	—	—	—	363300	400000	110400	430
6.6	70600	3.0	225	90	—	**318MR4B**	**IEC250M4**	—	—	—	299000	337600	106700	420
6.7	69500	3.0	221	105	—	**321R4B**	**IEC250M4**	—	—	—	513900	611700	678500	440
7.0	68900	2.1	213	35	**317ML3**	—	**IEC250M4**	—	—	—	314300	333900	78600	408
7.1	67100	1.1	207	30.0	**315ML3**	—	**IEC250M4**	—	—	—	132000	158300	46700	386
7.1	67100	1.5	207	35	**316ML3**	—	**IEC250M4**	—	—	—	202000	226600	77900	398
7.2	66800	0.9	206	25.0	**314ML3**	—	**IEC250M4**	—	—	—	132000	158300	46600	374
8.3	58000	2.5	179	35	**317ML3**	—	**IEC250M4**	—	—	—	314300	333900	74200	408
8.5	56200	1.1	174	25.0	**314ML3**	—	**IEC250M4**	—	—	—	132000	158300	44100	374
8.5	56500	1.3	174	30.0	**315ML3**	—	**IEC250M4**	—	—	—	132000	158300	44100	386
8.5	56500	1.8	174	35	**316ML3**	—	**IEC250M4**	—	—	—	202000	226600	73500	398
8.9	53700	2.3	166	35	**317ML3**	—	**IEC250M4**	—	—	—	314300	333900	72300	408
9.0	53200	1.1	164	25.0	**314ML3**	—	**IEC250M4**	—	—	—	132000	158300	43200	374
9.0	53500	1.7	165	30.0	**315ML3**	—	**IEC250M4**	—	—	—	132000	158300	43300	386
9.0	53500	2.1	165	35	**316ML3**	—	**IEC250M4**	—	—	—	202000	226600	72200	398
9.0	53400	2.1	165	100	—	**317MR3C**	**IEC250M4**	—	—	—	314300	333900	72100	410
9.4	50900	0.9	157	55	—	**314MR3C**	**IEC250M4**	—	—	—	132000	158300	42600	376
9.4	50900	1.2	157	90	—	**315MR3C**	**IEC250M4**	—	—	—	132000	158300	42600	388
10.6	45000	2.0	139	30.0	**315ML3**	—	**IEC250M4**	—	—	—	129500	155400	40900	386
10.6	45000	2.6	139	35	**316ML3**	—	**IEC250M4**	—	—	—	198200	222400	68200	398
10.7	44800	1.6	138	25.0	**314ML3**	—	**IEC250M4**	—	—	—	129400	155100	40800	374
10.7	45000	2.7	139	100	—	**317MR3C**	**IEC250M4**	—	—	—	308300	327500	68100	410
11.0	43800	1.4	135	55	—	**314MR3C**	**IEC250M4**	—	—	—	128400	154000	40500	376
11.0	43800	1.7	135	90	—	**315MR3C**	**IEC250M4**	—	—	—	128400	154000	40500	388
11.0	43800	2.2	135	90	—	**316MR3C**	**IEC250M4**	—	—	—	196600	220500	67500	400
12.4	38500	2.8	119	90	—	**317MR3B**	**IEC250M4**	—	—	—	294400	312700	64700	410

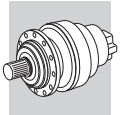

A

P_1 = 55 kW

n_2 min^{-1}	M_{n2} Nm	f_S	i	P_t kW					Rn_2 [N] MC	MZ	HC/PC	HZ/PZ	FZ	
12.6	38000	2.9	117	35	**316ML3**	—	**IEC250M4**	—	—	—	188300	211200	64400	398
12.8	37400	2.7	115	100	—	**317MR3C**	**IEC250M4**	—	—	—	291600	309800	64100	410
13.0	36800	1.3	113	55	—	**314MR3B**	**IEC250M4**	—	—	—	121900	146200	38200	376
13.0	36900	1.6	114	55	—	**314MR3C**	**IEC250M4**	—	—	—	122000	146300	38300	376
13.0	36800	1.6	113	75	—	**315MR3B**	**IEC250M4**	—	—	—	121900	146200	38200	388
13.0	36900	2.0	114	90	—	**315MR3C**	**IEC250M4**	—	—	—	122000	146300	38300	388
13.0	36900	2.6	114	35	**316ML3**	—	**IEC250M4**	—	—	—	186800	209500	63800	398
13.0	36900	2.5	114	90	—	**316MR3C**	**IEC250M4**	—	—	—	186700	209500	63800	400
13.7	34900	1.6	108	25.0	**314ML3**	—	**IEC250M4**	—	—	—	120000	143900	37600	374
13.7	34900	1.6	108	55	—	**314MR3C**	**IEC250M4**	—	—	—	120000	143900	37600	376
13.7	35100	2.4	108	30.0	**315ML3**	—	**IEC250M4**	—	—	—	120200	144200	37600	386
13.7	34900	2.4	108	90	—	**315MR3C**	**IEC250M4**	—	—	—	120000	143900	37600	388
13.7	34900	2.7	108	90	—	**316MR3C**	**IEC250M4**	—	—	—	183600	206000	62600	400
13.7	35000	2.7	108	100	—	**317MR3C**	**IEC250M4**	—	—	—	286100	303900	62700	410
14.8	32500	3.0	100	90	—	**317MR3B**	**IEC250M4**	—	—	—	279600	297100	61100	410
15.2	31600	1.8	97.6	55	—	**314MR3B**	**IEC250M4**	—	—	—	116500	139700	36400	376
15.2	31600	2.3	97.6	75	—	**315MR3B**	**IEC250M4**	—	—	—	116500	139700	36400	388
15.2	31600	2.8	97.6	75	—	**316MR3B**	**IEC250M4**	—	—	—	178300	200000	60600	400
16.0	30000	1.8	92.7	25.0	**314ML3**	—	**IEC250M4**	—	—	—	114700	137600	35700	374
16.2	29600	2.7	91.3	30.0	**315ML3**	—	**IEC250M4**	—	—	—	114200	136900	35600	386
16.3	29400	2.1	90.7	55	—	**314MR3C**	**IEC250M4**	—	—	—	114000	136700	35500	376
16.3	29400	2.6	90.7	90	—	**315MR3C**	**IEC250M4**	—	—	—	114000	136700	35500	388
16.3	29400	2.7	90.7	90	—	**316MR3C**	**IEC250M4**	—	—	—	174400	195700	59100	400
16.5	29100	2.7	89.8	100	—	**317MR3C**	**IEC250M4**	—	—	—	270600	287500	59000	410
16.7	28700	2.7	88.7	90	—	**316MR3C**	**IEC250M4**	—	—	—	173300	194400	58700	400
17.8	27000	3.0	83.3	90	—	**317MR3B**	**IEC250M4**	—	—	—	264500	281000	57500	410
18.0	26600	2.0	82.3	55	—	**314MR3B**	**IEC250M4**	—	—	—	110700	132700	34300	376
18.0	26600	2.6	82.3	75	—	**315MR3B**	**IEC250M4**	—	—	—	110700	132700	34300	388
18.0	26600	3.0	82.3	75	—	**316MR3B**	**IEC250M4**	—	—	—	169400	190000	57200	400
18.9	25300	3.0	78.1	90	—	**317MR3B**	**IEC250M4**	—	—	—	259500	275600	56300	410
19.0	25200	2.1	77.8	55	—	**314MR3B**	**IEC250M4**	—	—	—	108800	130500	33700	376
19.0	25200	2.9	77.8	75	—	**315MR3B**	**IEC250M4**	—	—	—	108800	130500	33700	388
19.0	25200	3.0	77.8	75	—	**316MR3B**	**IEC250M4**	—	—	—	166600	186800	56200	400
20.0	23900	2.1	73.9	25.0	**314ML3**	—	**IEC250M4**	—	—	—	107200	128500	33100	374
20.9	22900	2.2	70.7	55	—	**314MR3C**	**IEC250M4**	—	—	—	105800	126800	32700	376
20.9	22900	2.7	70.7	90	—	**315MR3C**	**IEC250M4**	—	—	—	105800	126800	32700	388
20.9	22900	2.7	70.7	90	—	**316MR3C**	**IEC250M4**	—	—	—	161800	181600	54400	400
21.5	22300	2.7	68.9	100	—	**317MR3C**	**IEC250M4**	—	—	—	249900	265500	54000	410
22.6	21200	2.4	65.5	55	—	**314MR3B**	**IEC250M4**	—	—	—	103400	124000	31800	376
22.6	21200	3.0	65.5	75	—	**315MR3B**	**IEC250M4**	—	—	—	103400	124000	31800	388
22.6	21200	3.0	65.5	75	—	**316MR3B**	**IEC250M4**	—	—	—	158200	177500	53100	400
22.8	21000	3.0	64.9	90	—	**317MR3B**	**IEC250M4**	—	—	—	245400	260700	52900	410
23.1	20800	3.0	64.1	75	—	**316MR3B**	**IEC250M4**	—	—	—	157100	176300	52700	400
23.6	20300	2.4	62.6	25.0	**314ML3**	—	**IEC250M4**	—	—	—	102000	122300	31400	374
29.0	16500	2.4	51.1	55	—	**314MR3B**	**IEC250M4**	—	—	—	95900	115000	29300	376
29.0	16500	3.0	51.1	75	—	**315MR3B**	**IEC250M4**	—	—	—	95900	115000	29300	388
29.0	16500	3.0	51.1	75	—	**316MR3B**	**IEC250M4**	—	—	—	146800	164700	48800	400
29.7	16100	3.0	49.8	90	—	**317MR3B**	**IEC250M4**	—	—	—	226700	240800	48400	410
32	15600	1.1	46.7	22.0	**310ML2**	—	**IEC250M4**	—	—	—	55200	70000	20500	338
37	13500	2.2	40.5	30.0	**313ML2**	—	**IEC250M4**	—	—	—	96300	112800	24100	362
38	12900	1.4	38.6	22.0	**310ML2**	—	**IEC250M4**	—	—	—	52100	66100	19300	338
38	13000	2.1	38.8	26.0	**311ML2**	—	**IEC250M4**	—	—	—	65600	83700	19300	350
45	10900	1.9	32.6	22.0	**310ML2**	—	**IEC250M4**	—	—	—	49500	62800	18200	338
45	10900	2.6	32.7	26.0	**311ML2**	—	**IEC250M4**	—	—	—	62300	79500	18200	350
48	10200	1.7	30.7	22.0	**310ML2**	—	**IEC250M4**	—	—	—	48600	61700	17900	338
53	9350	2.2	28.0	22.0	**310ML2**	—	**IEC250M4**	—	—	—	47300	60000	17300	338
56	8830	2.7	26.4	90	—	**313MR2C**	**IEC250M4**	—	—	—	84700	99200	20900	364

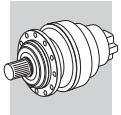

P_1 = 55 kW

n_2 min^{-1}	M_{n2} Nm	f_S	i	P_t kW					Rn_2 [N] MC	MZ	HC/PC	HZ/PZ	FZ	
58	8470	2.0	25.4	22.0	**310ML2**	**—**	**IEC250M4**	**—**	—	—	45900	58300	16800	338
58	8460	2.1	25.3	55	**—**	**310MR2C**	**IEC250M4**	**—**	—	—	45900	58200	16800	340
58	8510	2.7	25.5	26.0	**311ML2**	**—**	**IEC250M4**	**—**	—	—	57800	73700	16800	350
58	8460	2.7	25.3	90	**—**	**311MR2C**	**IEC250M4**	**—**	—	—	57700	73600	16800	352
67	7340	2.7	22.0	90	**—**	**313MR2C**	**IEC250M4**	**—**	—	—	80100	93900	19700	364
68	7290	2.2	21.8	22.0	**310ML2**	**—**	**IEC250M4**	**—**	—	—	43900	55700	15900	338
69	7130	2.6	21.3	55	**—**	**310MR2C**	**IEC250M4**	**—**	—	—	43600	55300	15800	340
69	7170	2.9	21.5	26.0	**311ML2**	**—**	**IEC250M4**	**—**	—	—	54900	70100	15900	350
69	7130	2.7	21.3	90	**—**	**311MR2C**	**IEC250M4**	**—**	—	—	54800	69900	15800	352
78	6380	3.0	19.1	75	**—**	**313MR2B**	**IEC250M4**	**—**	—	—	76800	90000	18800	364
81	6110	3.0	18.3	75	**—**	**311MR2B**	**IEC250M4**	**—**	—	—	52300	66800	15000	352
85	5810	2.7	17.4	22.0	**310ML2**	**—**	**IEC250M4**	**—**	—	—	41000	52000	14800	338
88	5630	2.7	16.8	90	**—**	**313MR2C**	**IEC250M4**	**—**	—	—	74000	86700	18000	364
89	5560	2.7	16.6	55	**—**	**310MR2C**	**IEC250M4**	**—**	—	—	40500	51300	14600	340
89	5560	2.7	16.6	90	**—**	**311MR2C**	**IEC250M4**	**—**	—	—	50900	64900	14600	352
93	5300	3.0	15.9	75	**—**	**313MR2B**	**IEC250M4**	**—**	—	—	72700	85200	17600	364
96	5150	3.0	15.4	75	**—**	**311MR2B**	**IEC250M4**	**—**	—	—	49700	63400	14200	352
122	4060	3.0	12.2	75	**—**	**313MR2B**	**IEC250M4**	**—**	—	—	67100	78600	16100	364
123	4010	3.0	12.0	75	**—**	**311MR2B**	**IEC250M4**	**—**	—	—	46100	58900	13100	352
197	2580	1.6	7.50	18.0	**306L1**	**—**	**IEC250M4**	**—**	9250	10500	23300	26900	6010	302
238	2150	2.7	6.23	22.0	**307L1**	**—**	**IEC250M4**	**—**	10400	13000	26100	34300	7270	314
239	2130	2.0	6.20	18.0	**306L1**	**—**	**IEC250M4**	**—**	8680	9900	22000	25400	5640	302
278	1840	2.2	5.33	18.0	**306L1**	**—**	**IEC250M4**	**—**	8260	9410	21000	24300	5370	302
348	1460	2.7	4.25	18.0	**306L1**	**—**	**IEC250M4**	**—**	7660	8730	19600	22700	4970	302

25.2 DATI TECNICI MOTORIDUTTORI 3/V_M - 3/A

Guida alla consultazione delle tabelle.

1

P_1 = 0.12 kW

n_2 min^{-1}	M_{n2} Nm	f_S	i	Pt kW					Rn$_2$ [N] MC/PC	MZ/PZ	HC	HZ	FZ	
0.58	1180	1.5	2337	—	**3/V 01 L3**	**—**	**BN63A4**	**—**	8710	8710	28800	31500	8000	260
0.72	940	0.9	1869	—	**3/V 00 L3**	**—**	**BN63A4**	**—**	8440	8440	27900	32500	8000	250
0.72	940	1.8	1869	—	**3/V 01 L3**	**—**	**BN63A4**	**—**	8440	8440	27900	30500	8000	260
0.90	800	1.1	1495	—	**3/V 00 L3**	**—**	**BN63A4**	**—**	8180	8180	27000	31400	7990	250
0.90	800	2.1	1495	—	**3/V 01 L3**	**—**	**BN63A4**	**—**	8180	8180	27000	29600	7990	260

2 3 4 5 6 7 8 9 10 11 12

1	Potenza trasmessa in entrata riduttore
2	Velocità angolare all'albero lento
3	Coppia nominale all'albero lento del riduttore basata su: - fattore di servizio indicato - durata teorica di 10000 h
4	Fattore di servizio
5	Rapporto di riduzione
6	Potenza termica riduttore
7	Grandezza riduttore combinato serie 300 + riduttore a vite senza fine
8	Grandezza riduttore combinato serie 300 + riduttore ad assi ortogonali
9	Grandezza motore IEC e polarità
10	Grandezza motore compatto e polarità
11	Carico radiale applicabile sull'albero lento, calcolato per: - fattore di servizio f_S=1 - durata teorica di 10000 h - velocità uscita n_2 Per forze non agenti in mezzeria riferirsi ai diagrammi riportati a seguito delle pagine dimensionali del riduttore in oggetto
12	Pagina delle dimensioni. Le dimensioni dei motoriduttori si riferiscono ad abbinamenti con motori di produzione BONFIGLIOLI

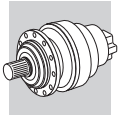

A

P_1 = 0.12 kW

n_2 min^{-1}	M_{n2} Nm	f_S	i	Pt kW					Rn_2 [N] MC/PC	MZ/PZ	HC	HZ	FZ	
0.58	1180	1.5	2337	—	**3/V 01 L3**	**—**	**BN63A4**	**—**	8710	8710	28800	31500	8000	260
0.72	940	0.9	1869	—	**3/V 00 L3**	**—**	**BN63A4**	**—**	8440	8440	27900	32500	8000	250
0.72	940	1.8	1869	—	**3/V 01 L3**	**—**	**BN63A4**	**—**	8440	8440	27900	30500	8000	260
0.90	800	1.1	1495	—	**3/V 00 L3**	**—**	**BN63A4**	**—**	8180	8180	27000	31400	7990	250
0.90	800	2.1	1495	—	**3/V 01 L3**	**—**	**BN63A4**	**—**	8180	8180	27000	29600	7990	260
0.98	700	1.8	1381	—	**3/V 00 L3**	**—**	**BN63A4**	**—**	8080	8080	26700	31100	7780	250
0.98	700	2.7	1381	—	**3/V 01 L3**	**—**	**BN63A4**	**—**	8080	8080	26700	29200	7780	260
1.1	640	1.3	1198	—	**3/V 00 L3**	**—**	**BN63A4**	**—**	7920	7920	26200	30500	7420	250
1.1	640	2.6	1198	—	**3/V 01 L3**	**—**	**BN63A4**	**—**	7920	7920	26200	28600	7420	260
1.2	560	2.1	1107	—	**3/V 00 L3**	**—**	**BN63A4**	**—**	7830	7830	25900	30100	7230	250
1.4	600	1.3	997	—	**3/V 00 L3**	**—**	**BN63A4**	**—**	7720	7720	25500	29700	6980	250
1.4	600	2.7	997	—	**3/V 01 L3**	**—**	**BN63A4**	**—**	7720	7720	25500	27900	6980	260
1.5	455	1.7	903	—	**3/V 00 L3**	**—**	**BN63A4**	**—**	7610	7610	25200	29300	6760	250
1.5	455	2.7	903	—	**3/V 01 L3**	**—**	**BN63A4**	**—**	7610	7610	25200	27500	6760	260
1.7	410	2.7	818	—	**3/V 00 L3**	**—**	**BN63A4**	**—**	7500	7500	24800	28900	6540	250
2.0	520	1.2	660	—	**—**	**3/A 00 L2**	**BN63A4**	**—**	7270	7270	24100	28000	6080	251
2.0	530	2.2	665	—	**—**	**3/A 01 L2**	**BN63A4**	**—**	7280	7280	24100	26300	6100	261
2.0	390	2.8	689	—	**3/V 00 L3**	**—**	**BN63A4**	**—**	7320	7320	24200	28200	6170	250
2.4	320	2.3	562	—	**3/V 00 L3**	**—**	**BN63A4**	**—**	7110	7110	23500	27300	5770	250
2.5	435	1.4	550	—	**—**	**3/A 00 L2**	**BN63A4**	**—**	7090	7090	23400	27300	5730	251
2.5	420	2.7	533	—	**—**	**3/A 01 L2**	**BN63A4**	**—**	7060	7060	23300	25500	5660	261
3.1	350	2.0	441	—	**—**	**3/A 00 L2**	**BN63A4**	**—**	6870	6870	22700	26400	5320	251
3.4	310	2.7	393	—	**—**	**3/A 01 L2**	**BN63A4**	**—**	6760	6760	22300	24400	5120	261
3.5	310	1.7	391	—	**—**	**3/A 00 L2**	**BN63A4**	**—**	6750	6750	22300	26000	5110	251
3.7	290	1.9	369	—	**—**	**3/A 00 L2**	**BN63A4**	**—**	6700	6700	22100	25800	5010	251
4.2	250	1.7	319	—	**—**	**3/A 00 L2**	**BN63A4**	**—**	6560	6560	21700	25200	4770	251
4.6	235	2.8	296	—	**—**	**3/A 00 L2**	**BN63A4**	**—**	6500	6500	21500	25000	4660	251
5.3	200	2.7	253	—	**—**	**3/A 00 L2**	**BN63A4**	**—**	6500	6500	21500	25000	4420	251

P_1 = 0.18 kW

n_2 min^{-1}	M_{n2} Nm	f_S	i	Pt kW					Rn_2 [N] MC/PC	MZ/PZ	HC	HZ	FZ	
0.56	1800	1.0	2337	—	**3/V 01 L3**	**—**	**BN63B4**	**—**	8710	8710	28800	31500	8000	260
0.71	1440	1.2	1869	—	**3/V 01 L3**	**—**	**BN63B4**	**—**	8440	8440	27900	30500	8000	260
0.88	1230	1.4	1495	—	**3/V 01 L3**	**—**	**BN63B4**	**—**	8180	8180	27000	29600	7990	260
0.96	1060	1.2	1381	—	**3/V 00 L3**	**—**	**BN63B4**	**—**	8080	8080	26700	31100	7780	250
0.96	1060	1.8	1381	—	**3/V 01 L3**	**—**	**BN63B4**	**—**	8080	8080	26700	29200	7780	260
1.1	980	1.7	1198	—	**3/V 01 L3**	**—**	**BN63B4**	**—**	7920	7920	26200	28600	7420	260
1.2	850	1.4	1107	—	**3/V 00 L3**	**—**	**BN63B4**	**—**	7830	7830	25900	30100	7230	250
1.2	910	2.2	1105	—	**3/V 01 L3**	**—**	**BN63B4**	**—**	7830	7830	25900	28300	7230	260
1.3	910	1.7	997	—	**3/V 01 L3**	**—**	**BN63B4**	**—**	7720	7720	25500	27900	6980	260
1.5	700	1.1	903	—	**3/V 00 L3**	**—**	**BN63B4**	**—**	7610	7610	25200	29300	6760	250
1.5	700	1.8	903	—	**3/V 01 L3**	**—**	**BN63B4**	**—**	7610	7610	25200	27500	6760	260
1.6	630	1.8	818	—	**3/V 00 L3**	**—**	**BN63B4**	**—**	7500	7500	24800	28900	6540	250
1.7	730	2.1	799	—	**3/V 01 L3**	**—**	**BN63B4**	**—**	7480	7480	24700	27000	6480	260
1.8	880	2.0	731	—	**—**	**3/A 03 L2**	**BN63B4**	**—**	23900	27300	46000	54500	18900	271
1.9	600	1.8	689	—	**3/V 00 L3**	**—**	**BN63B4**	**—**	7320	7320	24200	28200	6170	250
1.9	600	2.9	689	—	**3/V 01 L3**	**—**	**BN63B4**	**—**	7320	7320	24200	26500	6170	260
2.0	810	1.4	665	—	**—**	**3/A 01 L2**	**BN63B4**	**—**	7280	7280	24100	26300	6100	261
2.0	540	2.0	654	—	**3/V 00 L3**	**—**	**BN63B4**	**—**	7270	7270	24000	27900	6070	250
2.0	540	2.2	654	—	**3/V 01 L3**	**—**	**BN63B4**	**—**	7270	7270	24000	26300	6070	260
2.2	730	2.5	605	—	**—**	**3/A 03 L2**	**BN63B4**	**—**	23200	26500	44800	53100	17700	271
2.3	690	2.5	574	—	**—**	**3/A 03 L2**	**BN63B4**	**—**	23000	26300	44400	52700	17400	271
2.3	490	1.5	562	—	**3/V 00 L3**	**—**	**BN63B4**	**—**	7110	7110	23500	27300	5770	250
2.3	490	2.9	562	—	**3/V 01 L3**	**—**	**BN63B4**	**—**	7110	7110	23500	25700	5770	260
2.5	650	1.7	533	—	**—**	**3/A 01 L2**	**BN63B4**	**—**	7060	7060	23300	25500	5660	261
2.6	440	2.4	509	—	**3/V 00 L3**	**—**	**BN63B4**	**—**	7010	7010	23200	27000	5580	250
2.6	440	2.9	509	—	**3/V 01 L3**	**—**	**BN63B4**	**—**	7010	7010	23200	25300	5580	260
2.7	600	2.9	495	—	**—**	**3/A 03 L2**	**BN63B4**	**—**	22600	25800	43500	51600	16600	271
2.9	550	2.1	454	—	**—**	**3/A 01 L2**	**BN63B4**	**—**	6900	6900	22800	24900	5370	261
3.0	530	1.3	441	—	**—**	**3/A 00 L2**	**BN63B4**	**—**	6870	6870	22700	26400	5320	251

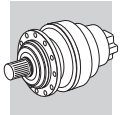

P_1 = 0.18 kW

n_2 min^{-1}	M_{n2} Nm	f_S	i	Pt kW					Rn_2 [N] MC/PC	MZ/PZ	HC	HZ	FZ	
3.0	355	2.0	436	—	**3/V 00 L3**	**—**	**BN63B4**	**—**	6860	6860	22700	26400	5300	250
3.2	360	2.8	415	—	**3/V 00 L3**	**—**	**BN63B4**	**—**	6810	6810	22500	26200	5210	250
3.4	475	1.1	391	—	**—**	**3/A 00 L2**	**BN63B4**	**—**	6750	6750	22300	26000	5110	251
3.4	475	1.7	393	—	**—**	**3/A 01 L2**	**BN63B4**	**—**	6760	6760	22300	24400	5120	261
3.6	445	1.3	369	—	**—**	**3/A 00 L2**	**BN63B4**	**—**	6700	6700	22100	25800	5010	251
4.1	385	1.1	319	—	**—**	**3/A 00 L2**	**BN63B4**	**—**	6560	6560	21700	25200	4770	251
4.5	360	1.8	296	—	**—**	**3/A 00 L2**	**BN63B4**	**—**	6500	6500	21500	25000	4660	251
5.2	305	1.8	253	—	**—**	**3/A 00 L2**	**BN63B4**	**—**	6500	6500	21500	25000	4420	251
6.0	265	2.3	219	—	**—**	**3/A 00 L2**	**BN63B4**	**—**	6500	6500	21500	25000	4210	251
6.5	245	2.6	203	—	**—**	**3/A 00 L2**	**BN63B4**	**—**	6500	6500	21500	25000	4100	251
7.7	205	2.7	171	—	**—**	**3/A 00 L2**	**BN63B4**	**—**	6500	6500	21500	25000	3880	251

P_1 = 0.25 kW

n_2 min^{-1}	M_{n2} Nm	f_S	i	Pt kW					Rn_2 [N] MC/PC	MZ/PZ	HC	HZ	FZ	
0.53	3080	2.3	2588	—	**3/V 06 L3**	**—**	**BN71A4**	**—**	34000	38800	77500	89500	35000	306
0.58	2770	1.1	2366	—	**3/V 04 L3**	**—**	**BN71A4**	**—**	28200	32200	54400	64500	24000	282
0.62	2620	1.7	2232	—	**3/V 05 L3**	**—**	**BN71A4**	**—**	28000	32000	53900	63900	24000	294
0.69	2190	1.1	2009	—	**3/V 03 L3**	**—**	**BN71A4**	**—**	27600	31500	53100	63000	24000	270
0.73	2220	1.4	1893	—	**3/V 04 L3**	**—**	**BN71A4**	**—**	27300	31200	52700	62400	24000	282
0.77	2090	2.2	1786	—	**3/V 05 L3**	**—**	**BN71A4**	**—**	27100	31000	52300	61900	24000	294
0.78	2220	1.3	1774	—	**3/V 04 L3**	**—**	**BN71A4**	**—**	27100	30900	52200	61900	24000	282
0.80	1880	1.5	1728	—	**3/V 03 L3**	**—**	**BN71A4**	**—**	27000	30800	52000	61600	24000	270
0.82	2100	2.1	1674	—	**3/V 05 L3**	**—**	**BN71A4**	**—**	26800	30700	51800	61400	24000	294
0.86	1760	1.4	1610	—	**3/V 03 L3**	**—**	**BN71A4**	**—**	26700	30500	51500	61000	24000	270
0.90	1800	2.1	1536	—	**3/V 04 L3**	**—**	**BN71A4**	**—**	26500	30300	51100	60600	24000	282
0.92	1630	1.1	1495	—	**3/V 01 L3**	**—**	**BN71A4**	**—**	8180	8180	27000	29600	7990	260
0.96	1680	2.8	1431	—	**3/V 05 L3**	**—**	**BN71A4**	**—**	26300	30000	50600	60000	23600	294
0.97	1780	1.7	1419	—	**3/V 04 L3**	**—**	**BN71A4**	**—**	26200	30000	50600	59900	23600	282
1.0	1420	1.3	1381	—	**3/V 01 L3**	**—**	**BN71A4**	**—**	8080	8080	26700	29200	7780	260
1.0	1510	1.9	1385	—	**3/V 03 L3**	**—**	**BN71A4**	**—**	26100	29900	50400	59700	23400	270
1.1	1440	2.5	1231	—	**3/V 04 L3**	**—**	**BN71A4**	**—**	25700	29400	49500	58700	22500	282
1.2	1140	1.0	1107	—	**3/V 00 L3**	**—**	**BN71A4**	**—**	7830	7830	25900	30100	7230	250
1.2	1210	1.7	1105	—	**3/V 01 L3**	**—**	**BN71A4**	**—**	7830	7830	25900	28300	7230	260
1.2	1310	1.3	1198	—	**3/V 01 L3**	**—**	**BN71A4**	**—**	7920	7920	26200	28600	7420	260
1.2	1300	1.8	1189	—	**3/V 03 L3**	**—**	**BN71A4**	**—**	25600	29200	49300	58400	22200	270
1.2	1440	2.5	1152	—	**3/V 04 L3**	**—**	**BN71A4**	**—**	25500	29100	49100	58200	22000	282
1.3	1120	2.4	1023	—	**3/V 03 L3**	**—**	**BN71A4**	**—**	25000	28600	48300	57200	21100	270
1.4	1220	1.3	997	—	**3/V 01 L3**	**—**	**BN71A4**	**—**	7720	7720	25500	27900	6980	260
1.5	930	1.3	903	—	**3/V 01 L3**	**—**	**BN71A4**	**—**	7610	7610	25200	27500	6760	260
1.5	1110	2.4	923	—	**3/V 03 L3**	**—**	**BN71A4**	**—**	24700	28200	47600	56400	20400	270
1.6	1230	2.2	887	—	**3/V 04 L3**	**—**	**BN71A4**	**—**	24500	28000	47300	56000	20100	282
1.7	840	1.3	818	—	**3/V 00 L3**	**—**	**BN71A4**	**—**	7500	7500	24800	28900	6540	250
1.7	980	1.6	799	—	**3/V 01 L3**	**—**	**BN71A4**	**—**	7480	7480	24700	27000	6480	260
1.7	960	2.3	793	—	**3/V 03 L3**	**—**	**BN71A4**	**—**	24100	27600	46500	55100	19400	270
1.9	1180	1.5	731	—	**—**	**3/A 03 L2**	**BN71A4**	**—**	23900	27300	46000	54500	18900	271
1.9	980	2.7	710	—	**3/V 04 L3**	**—**	**BN71A4**	**—**	23700	27100	45800	54300	18700	282
2.0	800	1.4	689	—	**3/V 00 L3**	**—**	**BN71A4**	**—**	7320	7320	24200	28200	6170	250
2.0	800	2.1	689	—	**3/V 01 L3**	**—**	**BN71A4**	**—**	7320	7320	24200	26500	6170	260
2.1	1070	1.1	665	—	**—**	**3/A 01 L2**	**BN71A4**	**—**	7280	7280	24100	26300	6100	261
2.1	710	1.5	654	—	**3/V 00 L3**	**—**	**BN71A4**	**—**	7270	7270	24000	27900	6070	250
2.1	710	1.7	654	—	**3/V 01 L3**	**—**	**BN71A4**	**—**	7270	7270	24000	26300	6070	260
2.2	750	3.0	623	—	**3/V 03 L3**	**—**	**BN71A4**	**—**	23300	26600	45000	53300	17900	270
2.3	970	1.8	605	—	**—**	**3/A 03 L2**	**BN71A4**	**—**	23200	26500	44800	53100	17700	271
2.4	920	1.9	574	—	**—**	**3/A 03 L2**	**BN71A4**	**—**	23000	26300	44400	52700	17400	271
2.5	650	1.1	562	—	**3/V 00 L3**	**—**	**BN71A4**	**—**	7110	7110	23500	27300	5770	250
2.5	650	2.2	562	—	**3/V 01 L3**	**—**	**BN71A4**	**—**	7110	7110	23500	25700	5770	260
2.6	860	1.3	533	—	**—**	**3/A 01 L2**	**BN71A4**	**—**	7060	7060	23300	25500	5660	261
2.7	590	1.8	509	—	**3/V 00 L3**	**—**	**BN71A4**	**—**	7010	7010	23200	27000	5580	250
2.7	590	2.2	509	—	**3/V 01 L3**	**—**	**BN71A4**	**—**	7010	7010	23200	25300	5580	260
2.8	800	2.2	495	—	**—**	**3/A 03 L2**	**BN71A4**	**—**	22600	25800	43500	51600	16600	271

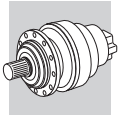

A

P_1 = 0.25 kW

n_2 min^{-1}	M_{n2} Nm	f_S	i	Pt kW					Rn$_2$ [N] MC/PC	MZ/PZ	HC	HZ	FZ	
3.0	730	1.6	454	—	—	**3/A 01 L2**	**BN71A4**	—	6900	6900	22800	24900	5370	261
3.1	710	1.0	441	—	—	**3/A 00 L2**	**BN71A4**	—	6870	6870	22700	26400	5320	251
3.1	560	2.4	443	—	**3/V 01 L3**	—	**BN71A4**	—	6870	6870	22700	24800	5330	260
3.2	475	1.5	436	—	**3/V 00 L3**	—	**BN71A4**	—	6860	6860	22700	26400	5300	250
3.3	480	2.1	415	—	**3/V 00 L3**	—	**BN71A4**	—	6810	6810	22500	26200	5210	250
3.4	660	2.9	409	—	—	**3/A 03 L2**	**BN71A4**	—	22000	25100	42300	50200	15600	271
3.5	630	1.3	393	—	—	**3/A 01 L2**	**BN71A4**	—	6760	6760	22300	24400	5120	261
3.7	590	0.9	369	—	—	**3/A 00 L2**	**BN71A4**	—	6700	6700	22100	25800	5010	251
3.8	590	2.3	364	—	—	**3/A 01 L2**	**BN71A4**	—	6680	6680	22100	24200	4990	261
4.4	500	2.3	311	—	—	**3/A 01 L2**	**BN71A4**	—	6530	6530	21600	23600	4740	261
4.7	475	1.4	296	—	—	**3/A 00 L2**	**BN71A4**	—	6500	6500	21500	25000	4660	251
5.1	435	2.3	269	—	—	**3/A 01 L2**	**BN71A4**	—	6500	6500	21500	23500	4510	261
5.4	410	2.8	255	—	—	**3/A 01 L2**	**BN71A4**	—	6500	6500	21500	23500	4430	261
5.5	410	1.3	253	—	—	**3/A 00 L2**	**BN71A4**	—	6500	6500	21500	25000	4420	251
6.3	355	1.8	219	—	—	**3/A 00 L2**	**BN71A4**	—	6500	6500	21500	25000	4210	251
6.3	355	2.3	220	—	—	**3/A 01 L2**	**BN71A4**	—	6500	6500	21500	23500	4220	261
6.8	325	2.0	203	—	—	**3/A 00 L2**	**BN71A4**	—	6500	6500	21500	25000	4100	251
8.1	275	2.0	171	—	—	**3/A 00 L2**	**BN71A4**	—	6500	6500	21500	25000	3880	251
10.3	215	2.5	134	—	—	**3/A 00 L2**	**BN71A4**	—	6260	6260	20800	24200	3580	251

P_1 = 0.37 kW

n_2 min^{-1}	M_{n2} Nm	f_S	i	Pt kW					Rn$_2$ [N] MC/PC	MZ/PZ	HC	HZ	FZ	
0.53	4620	1.5	2588	—	**3/V 06 L3**	—	**BN71B4**	**M1SD4**	34000	38800	77500	89500	35000	306
0.61	3930	1.1	2232	—	**3/V 05 L3**	—	**BN71B4**	**M1SD4**	28000	32000	53900	63900	24000	294
0.64	3820	2.2	2139	—	**3/V 06 L3**	—	**BN71B4**	**M1SD4**	33100	37700	75500	87100	35000	306
0.77	3150	1.5	1786	—	**3/V 05 L3**	—	**BN71B4**	**M1SD4**	27100	31000	52300	61900	24000	294
0.77	3160	2.7	1768	—	**3/V 06 L3**	—	**BN71B4**	**M1SD4**	32200	36700	73400	84800	35000	306
0.79	2830	1.0	1728	—	**3/V 03 L3**	—	**BN71B4**	**M1SD4**	27000	30800	52000	61600	24000	270
0.82	3150	1.4	1674	—	**3/V 05 L3**	—	**BN71B4**	**M1SD4**	26800	30700	51800	61400	24000	294
0.85	2640	0.9	1610	—	**3/V 03 L3**	—	**BN71B4**	**M1SD4**	26700	30500	51500	61000	24000	270
0.89	2710	1.4	1536	—	**3/V 04 L3**	—	**BN71B4**	**M1SD4**	26500	30300	51100	60600	24000	282
0.96	2520	1.8	1431	—	**3/V 05 L3**	—	**BN71B4**	**M1SD4**	26300	30000	50600	60000	23600	294
0.97	2670	1.1	1419	—	**3/V 04 L3**	—	**BN71B4**	**M1SD4**	26200	30000	50600	59900	23600	282
0.99	2270	1.2	1385	—	**3/V 03 L3**	—	**BN71B4**	**M1SD4**	26100	29900	50400	59700	23400	270
1.1	2170	1.7	1231	—	**3/V 04 L3**	—	**BN71B4**	**M1SD4**	25700	29400	49500	58700	22500	282
1.1	2170	2.5	1231	—	**3/V 05 L3**	—	**BN71B4**	**M1SD4**	25700	29400	49500	58700	22500	294
1.2	1810	1.1	1105	—	**3/V 01 L3**	—	**BN71B4**	—	7830	7830	25900	28300	7230	260
1.2	1950	1.2	1189	—	**3/V 03 L3**	—	**BN71B4**	**M1SD4**	25600	29200	49300	58400	22200	270
1.2	2170	1.6	1152	—	**3/V 04 L3**	—	**BN71B4**	**M1SD4**	25500	29100	49100	58200	22000	282
1.2	2180	2.0	1116	—	**3/V 05 L3**	—	**BN71B4**	**M1SD4**	25300	29000	48900	57900	21700	294
1.3	1680	1.6	1023	—	**3/V 03 L3**	—	**BN71B4**	**M1SD4**	25000	28600	48300	57200	21100	270
1.3	1860	2.4	1057	—	**3/V 05 L3**	—	**BN71B4**	**M1SD4**	25100	28700	48500	57500	21400	294
1.4	1730	2.2	981	—	**3/V 04 L3**	—	**BN71B4**	**M1SD4**	24900	28400	48000	56900	20800	282
1.5	1670	1.6	923	—	**3/V 03 L3**	—	**BN71B4**	**M1SD4**	24700	28200	47600	56400	20400	270
1.5	1840	1.5	887	—	**3/V 04 L3**	—	**BN71B4**	**M1SD4**	24500	28000	47300	56000	20100	282
1.5	1750	2.5	894	—	**3/V 05 L3**	—	**BN71B4**	**M1SD4**	24500	28100	47300	56100	20200	294
1.7	1470	1.1	799	—	**3/V 01 L3**	—	**BN71B4**	—	7480	7480	24700	27000	6480	260
1.7	1440	1.5	793	—	**3/V 03 L3**	—	**BN71B4**	**M1SD4**	24100	27600	46500	55100	19400	270
1.7	1490	2.8	793	—	**3/V 05 L3**	—	**BN71B4**	**M1SD4**	24100	27600	46500	55100	19400	294
1.8	1500	2.2	769	—	**3/V 04 L3**	—	**BN71B4**	**M1SD4**	24000	27500	46300	54900	19200	282
1.9	1770	1.0	731	—	—	**3/A 03 L2**	**BN71B4**	—	23900	27300	46000	54500	18900	271
1.9	1330	2.0	736	—	**3/V 03 L3**	—	**BN71B4**	**M1SD4**	23900	27300	46000	54600	18900	270
1.9	1480	1.8	710	—	**3/V 04 L3**	—	**BN71B4**	**M1SD4**	23700	27100	45800	54300	18700	282
1.9	1450	2.8	715	—	**3/V 05 L3**	—	**BN71B4**	**M1SD4**	23800	27200	45900	54300	18800	294
2.0	1200	0.9	689	—	**3/V 00 L3**	—	**BN71B4**	—	7320	7320	24200	28200	6170	250
2.0	1200	1.4	689	—	**3/V 01 L3**	—	**BN71B4**	—	7320	7320	24200	26500	6170	260
2.1	1070	1.0	654	—	**3/V 00 L3**	—	**BN71B4**	—	7270	7270	24000	27900	6070	250
2.1	1070	1.1	654	—	**3/V 01 L3**	—	**BN71B4**	—	7270	7270	24000	26300	6070	260
2.2	1130	2.0	623	—	**3/V 03 L3**	—	**BN71B4**	**M1SD4**	23300	26600	45000	53300	17900	270
2.3	1460	1.2	605	—	—	**3/A 03 L2**	**BN71B4**	—	23200	26500	44800	53100	17700	271

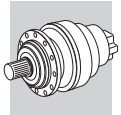

A

P_1 = 0.37 kW

n_2 min^{-1}	M_{n2} Nm	f_S	i	Pt kW					Rn_2 [N] MC/PC	MZ/PZ	HC	HZ	FZ	
2.3	1440	2.3	594	—	—	3/A 05 L2	BN71B4	M1SD4	23200	26500	44700	52900	17600	295
2.4	1390	1.3	574	—	—	3/A 03 L2	BN71B4	M1SD4	23000	26300	44400	52700	17400	271
2.4	980	1.4	562	—	3/V 01 L3	—	BN71B4	—	7110	7110	23500	25700	5770	260
2.4	1110	2.8	568	—	3/V 04 L3	—	BN71B4	M1SD4	23000	26300	44400	52600	17400	282
2.5	980	2.8	544	—	3/V 03 L3	—	BN71B4	M1SD4	22900	26100	44100	52300	17100	270
2.6	1260	2.0	520	—	—	3/A 04 L2	BN71B4	M1SD4	22700	26000	43800	51900	16900	283
2.7	880	1.2	509	—	3/V 00 L3	—	BN71B4	—	7010	7010	23200	27000	5580	250
2.7	880	1.4	509	—	3/V 01 L3	—	BN71B4	—	7010	7010	23200	25300	5580	260
2.7	990	2.0	502	—	3/V 03 L3	—	BN71B4	M1SD4	22600	25800	43600	51700	16700	270
2.8	1200	1.4	495	—	—	3/A 03 L2	BN71B4	M1SD4	22600	25800	43500	51600	16600	271
2.9	1140	2.2	469	—	—	3/A 04 L2	BN71B4	M1SD4	22400	25600	43200	51200	16300	283
3.0	1100	1.0	454	—	—	3/A 01 L2	BN71B4	M1SD4	6900	6900	22800	24900	5370	261
3.0	830	2.8	460	—	3/V 03 L3	—	BN71B4	M1SD4	22300	25500	43100	51000	16200	270
3.1	710	1.0	436	—	3/V 00 L3	—	BN71B4	—	6860	6860	22700	26400	5300	250
3.1	850	1.6	443	—	3/V 01 L3	—	BN71B4	—	6870	6870	22700	24800	5330	260
3.2	850	2.2	430	—	3/V 01 L3	—	BN71B4	—	6840	6840	22600	24700	5270	260
3.3	990	2.0	409	—	—	3/A 03 L2	BN71B4	M1SD4	22000	25100	42300	50200	15600	271
3.3	720	1.4	415	—	3/V 00 L3	—	BN71B4	—	6810	6810	22500	26200	5210	250
3.5	930	2.6	386	—	—	3/A 04 L2	BN71B4	M1SD4	21800	24900	42000	49800	15300	283
3.5	780	2.8	395	—	3/V 03 L3	—	BN71B4	M1SD4	21800	25000	42100	49900	15400	270
3.8	880	1.5	364	—	—	3/A 01 L2	BN71B4	M1SD4	6680	6680	22100	24200	4990	261
3.9	850	2.4	352	—	—	3/A 03 L2	BN71B4	M1SD4	21500	24600	41400	49100	14800	271
3.9	840	2.9	349	—	—	3/A 04 L2	BN71B4	M1SD4	21500	24500	41400	49000	14800	283
4.2	790	2.1	326	—	—	3/A 03 L2	BN71B4	M1SD4	21200	24300	41000	48600	14400	271
4.4	750	1.5	311	—	—	3/A 01 L2	BN71B4	M1SD4	6530	6530	21600	23600	4740	261
4.6	720	0.9	296	—	—	3/A 00 L2	BN71B4	M1SD4	6500	6500	21500	25000	4660	251
5.1	650	1.6	269	—	—	3/A 01 L2	BN71B4	M1SD4	6500	6500	21500	23500	4510	261
5.1	650	2.8	269	—	—	3/A 03 L2	BN71B4	M1SD4	21000	24000	40500	48000	13500	271
5.4	620	1.9	255	—	—	3/A 01 L2	BN71B4	M1SD4	6500	6500	21500	23500	4430	261
6.2	530	1.6	220	—	—	3/A 01 L2	BN71B4	M1SD4	6500	6500	21500	23500	4220	261
6.3	530	1.2	219	—	—	3/A 00 L2	BN71B4	M1SD4	6500	6500	21500	25000	4210	251
6.7	490	1.3	203	—	—	3/A 00 L2	BN71B4	M1SD4	6500	6500	21500	25000	4100	251
6.7	495	2.6	204	—	—	3/A 01 L2	BN71B4	M1SD4	6500	6500	21500	23500	4120	261
7.4	445	2.3	184	—	—	3/A 01 L2	BN71B4	M1SD4	6500	6500	21500	23500	3980	261
8.0	415	1.3	171	—	—	3/A 00 L2	BN71B4	M1SD4	6500	6500	21500	25000	3880	251
8.3	400	2.9	166	—	—	3/A 01 L2	BN71B4	M1SD4	6500	6500	21500	23500	3840	261
10.2	325	1.7	134	—	—	3/A 00 L2	BN71B4	M1SD4	6260	6260	20800	24200	3580	251
12.8	260	2.5	107	—	—	3/A 00 L2	BN71B4	M1SD4	5810	5810	19400	22600	3320	251
13.7	240	2.3	100	—	—	3/A 00 L2	BN71B4	M1SD4	5680	5680	19000	22100	3240	251
15.5	215	2.6	88.6	—	—	3/A 00 L2	BN71B4	M1SD4	5450	5450	18400	21300	3120	251

P_1 = 0.55 kW

n_2 min^{-1}	M_{n2} Nm	f_S	i	Pt kW					Rn_2 [N] MC/PC	MZ/PZ	HC	HZ	FZ	
0.28	12600	2.2	4959	—	3/V 10 ML4	—	BN80A4	M1LA4	0	0	116400	147600	65000	343
0.30	11700	2.6	4637	—	3/V 10 ML4	—	BN80A4	M1LA4	0	0	115300	146200	65000	343
0.34	11800	2.6	4036	—	3/V 10 ML4	—	BN80A4	M1LA4	0	0	113100	143400	65000	343
0.42	9540	2.9	3273	—	3/V 10 ML4	—	BN80A4	M1LA4	0	0	109700	139100	65000	343
0.54	6750	1.0	2588	—	3/V 06 L3	—	BN80A4	M1LA4	34000	38800	77500	89500	35000	306
0.56	6190	1.8	2472	—	3/V 07 L3	—	BN80A4	—	40500	50700	91200	120000	45000	318
0.65	5580	1.5	2139	—	3/V 06 L3	—	BN80A4	M1LA4	33100	37700	75500	87100	35000	306
0.65	5690	1.9	2150	—	3/V 07 L3	—	BN80A4	—	39700	49700	89400	117600	45000	318
0.71	4920	2.5	1964	—	3/V 07 L3	—	BN80A4	—	39200	49000	88300	116100	45000	318
0.78	4600	1.0	1786	—	3/V 05 L3	—	BN80A4	M1LA4	27100	31000	52300	61900	24000	294
0.79	4610	1.9	1768	—	3/V 06 L3	—	BN80A4	M1LA4	32200	36700	73400	84800	35000	306
0.83	4610	1.0	1674	—	3/V 05 L3	—	BN80A4	M1LA4	26800	30700	51800	61400	24000	294
0.90	3950	0.9	1536	—	3/V 04 L3	—	BN80A4	M1LA4	26500	30300	51100	60600	24000	282
0.90	4200	2.6	1545	—	3/V 07 L3	—	BN80A4	—	37900	47400	85300	112200	45000	318
0.97	3680	1.3	1431	—	3/V 05 L3	—	BN80A4	M1LA4	26300	30000	50600	60000	23600	294
1.0	3790	2.2	1395	—	3/V 06 L3	—	BN80A4	M1LA4	31100	35500	71000	82000	34200	306
1.1	3170	1.1	1231	—	3/V 04 L3	—	BN80A4	M1LA4	25700	29400	49500	58700	22500	282

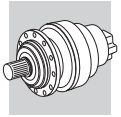

A

P_1 = 0.55 kW

n_2 min^{-1}	M_{n2} Nm	f_S	i	Pt kW					Rn_2 [N] MC/PC	MZ/PZ	HC	HZ	FZ	
1.1	3170	1.7	1231	—	**3/V 05 L3**	**—**	**BN80A4**	**M1LA4**	25700	29400	49500	58700	22500	294
1.1	3160	2.5	1212	—	**3/V 06 L3**	**—**	**BN80A4**	**M1LA4**	30500	34800	69600	80300	32600	306
1.2	3170	1.1	1152	—	**3/V 04 L3**	**—**	**BN80A4**	**M1LA4**	25500	29100	49100	58200	22000	282
1.2	3190	1.4	1116	—	**3/V 05 L3**	**—**	**BN80A4**	**M1LA4**	25300	29000	48900	57900	21700	294
1.2	3130	2.6	1153	—	**3/V 06 L3**	**—**	**BN80A4**	**M1LA4**	30300	34500	69100	79800	32100	306
1.3	2720	1.6	1057	—	**3/V 05 L3**	**—**	**BN80A4**	**M1LA4**	25100	28700	48500	57500	21400	294
1.4	2450	1.1	1023	—	**3/V 03 L3**	**—**	**BN80A4**	**M1LA4**	25000	28600	48300	57200	21100	270
1.4	2530	1.5	981	—	**3/V 04 L3**	**—**	**BN80A4**	**M1LA4**	24900	28400	48000	56900	20800	282
1.5	2440	1.1	923	—	**3/V 03 L3**	**—**	**BN80A4**	**M1LA4**	24700	28200	47600	56400	20400	270
1.5	2790	2.8	930	—	**3/V 06 L3**	**—**	**BN80A4**	**M1LA4**	29400	33500	67000	77300	29800	306
1.6	2700	1.0	887	—	**3/V 04 L3**	**—**	**BN80A4**	**M1LA4**	24500	28000	47300	56000	20100	282
1.6	2560	1.7	894	—	**3/V 05 L3**	**—**	**BN80A4**	**M1LA4**	24500	28100	47300	56100	20200	294
1.8	2100	1.0	793	—	**3/V 03 L3**	**—**	**BN80A4**	**M1LA4**	24100	27600	46500	55100	19400	270
1.8	2200	1.5	769	—	**3/V 04 L3**	**—**	**BN80A4**	**M1LA4**	24000	27500	46300	54900	19200	282
1.8	2180	1.9	793	—	**3/V 05 L3**	**—**	**BN80A4**	**M1LA4**	24100	27600	46500	55100	19400	294
1.9	1950	1.4	736	—	**3/V 03 L3**	**—**	**BN80A4**	**M1LA4**	23900	27300	46000	54600	18900	270
1.9	2120	1.9	715	—	**3/V 05 L3**	**—**	**BN80A4**	**M1LA4**	23800	27200	45900	54300	18800	294
2.0	1750	1.0	689	—	**3/V 01 L3**	**—**	**BN80A4**	**—**	7320	7320	24200	26500	6170	260
2.0	2160	1.2	710	—	**3/V 04 L3**	**—**	**BN80A4**	**M1LA4**	23700	27100	45800	54300	18700	282
2.1	2320	2.6	671	—	**—**	**3/A 06 L2**	**BN80A4**	**M1LA4**	28000	32000	64000	73800	26800	307
2.2	1650	1.3	623	—	**3/V 03 L3**	**—**	**BN80A4**	**M1LA4**	23300	26600	45000	53300	17900	270
2.2	1720	2.1	623	—	**3/V 04 L3**	**—**	**BN80A4**	**M1LA4**	23300	26600	45000	53300	17900	282
2.2	1720	2.6	623	—	**3/V 05 L3**	**—**	**BN80A4**	**M1LA4**	23300	26600	45000	53300	17900	294
2.3	2100	1.6	594	—	**—**	**3/A 05 L2**	**BN80A4**	**M1LA4**	23200	26500	44700	52900	17600	295
2.3	2120	2.8	611	—	**—**	**3/A 06 L2**	**BN80A4**	**M1LA4**	27700	31600	63100	72800	25900	307
2.4	1620	1.9	568	—	**3/V 04 L3**	**—**	**BN80A4**	**M1LA4**	23000	26300	44400	52600	17400	282
2.4	1750	2.8	576	—	**3/V 05 L3**	**—**	**BN80A4**	**M1LA4**	23100	26300	44500	52700	17400	294
2.5	1430	1.0	562	—	**3/V 01 L3**	**—**	**BN80A4**	**—**	7110	7110	23500	25700	5770	260
2.6	1440	1.9	544	—	**3/V 03 L3**	**—**	**BN80A4**	**M1LA4**	22900	26100	44100	52300	17100	270
2.6	1570	2.5	529	—	**3/V 05 L3**	**—**	**BN80A4**	**M1LA4**	22800	26000	43900	52000	17000	294
2.7	1840	1.4	520	—	**—**	**3/A 04 L2**	**BN80A4**	**M1LA4**	22700	26000	43800	51900	16900	283
2.7	1290	1.0	509	—	**3/V 01 L3**	**—**	**BN80A4**	**—**	7010	7010	23200	25300	5580	260
2.8	1750	1.0	495	—	**—**	**3/A 03 L2**	**BN80A4**	**M1LA4**	22600	25800	43500	51600	16600	271
2.8	1740	2.2	491	—	**—**	**3/A 05 L2**	**BN80A4**	**M1LA4**	22500	25800	43500	51500	16500	295
2.8	1450	1.4	502	—	**3/V 03 L3**	**—**	**BN80A4**	**M1LA4**	22600	25800	43600	51700	16700	270
2.8	1290	2.3	501	—	**3/V 04 L3**	**—**	**BN80A4**	**M1LA4**	22600	25800	43600	51700	16700	282
3.0	1660	1.5	469	—	**—**	**3/A 04 L2**	**BN80A4**	**M1LA4**	22400	25600	43200	51200	16300	283
3.0	1220	1.9	460	—	**3/V 03 L3**	**—**	**BN80A4**	**M1LA4**	22300	25500	43100	51000	16200	270
3.1	1240	1.1	443	—	**3/V 01 L3**	**—**	**BN80A4**	**—**	6870	6870	22700	24800	5330	260
3.1	1300	2.9	453	—	**3/V 04 L3**	**—**	**BN80A4**	**M1LA4**	22300	25500	43000	50900	16100	282
3.2	1250	1.5	430	—	**3/V 01 L3**	**—**	**BN80A4**	**—**	6840	6840	22600	24700	5270	260
3.3	1490	2.9	422	—	**—**	**3/A 05 L2**	**BN80A4**	**M1LA4**	22100	25200	42500	50400	15700	295
3.3	1050	0.9	415	—	**3/V 00 L3**	**—**	**BN80A4**	**—**	6810	6810	22500	26200	5210	250
3.4	1450	1.3	409	—	**—**	**3/A 03 L2**	**BN80A4**	**M1LA4**	22000	25100	42300	50200	15600	271
3.5	1410	2.3	398	—	**—**	**3/A 05 L2**	**BN80A4**	**M1LA4**	21900	25000	42200	50000	15400	295
3.5	1140	1.9	395	—	**3/V 03 L3**	**—**	**BN80A4**	**M1LA4**	21800	25000	42100	49900	15400	270
3.6	1370	1.8	386	—	**—**	**3/A 04 L2**	**BN80A4**	**M1LA4**	21800	24900	42000	49800	15300	283
3.8	1290	1.0	364	—	**—**	**3/A 01 L2**	**BN80A4**	**M1LA4**	6680	6680	22100	24200	4990	261
3.9	1250	1.6	352	—	**—**	**3/A 03 L2**	**BN80A4**	**M1LA4**	21500	24600	41400	49100	14800	271
4.0	1230	2.0	349	—	**—**	**3/A 04 L2**	**BN80A4**	**M1LA4**	21500	24500	41400	49000	14800	283
4.3	1150	1.4	326	—	**—**	**3/A 03 L2**	**BN80A4**	**M1LA4**	21200	24300	41000	48600	14400	271
4.4	1120	2.1	317	—	**—**	**3/A 04 L2**	**BN80A4**	**M1LA4**	21200	24200	40800	48400	14300	283
4.5	1100	1.0	311	—	**—**	**3/A 01 L2**	**BN80A4**	**M1LA4**	6530	6530	21600	23600	4740	261
4.9	1000	2.8	283	—	**—**	**3/A 04 L2**	**BN80A4**	**M1LA4**	21000	24000	40500	48000	13800	283
5.2	950	1.1	269	—	**—**	**3/A 01 L2**	**BN80A4**	**M1LA4**	6500	6500	21500	23500	4510	261
5.2	950	1.9	269	—	**—**	**3/A 03 L2**	**BN80A4**	**M1LA4**	21000	24000	40500	48000	13500	271
5.5	900	1.3	255	—	**—**	**3/A 01 L2**	**BN80A4**	**M1LA4**	6500	6500	21500	23500	4430	261
6.3	780	1.1	220	—	**—**	**3/A 01 L2**	**BN80A4**	**M1LA4**	6500	6500	21500	23500	4220	261
6.3	780	2.1	220	—	**—**	**3/A 03 L2**	**BN80A4**	**M1LA4**	21000	24000	40500	48000	12700	271
6.8	720	0.9	203	—	**—**	**3/A 00 L2**	**BN80A4**	**M1LA4**	6500	6500	21500	25000	4100	251
6.8	720	1.8	204	—	**—**	**3/A 01 L2**	**BN80A4**	**M1LA4**	6500	6500	21500	23500	4120	261
7.6	650	1.6	184	—	**—**	**3/A 01 L2**	**BN80A4**	**M1LA4**	6500	6500	21500	23500	3980	261
7.6	640	2.8	182	—	**—**	**3/A 03 L2**	**BN80A4**	**M1LA4**	21000	24000	40500	48000	11900	271
8.1	610	0.9	171	—	**—**	**3/A 00 L2**	**BN80A4**	**M1LA4**	6500	6500	21500	25000	3880	251
8.4	590	2.0	166	—	**—**	**3/A 01 L2**	**BN80A4**	**M1LA4**	6500	6500	21500	23500	3840	261

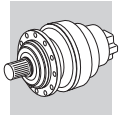

P_1 = 0.55 kW

n_2 min^{-1}	M_{n2} Nm	f_S	i	Pt kW					Rn$_2$ [N] MC/PC	MZ/PZ	HC	HZ	FZ	
10.4	475	1.2	134	—	—	**3/A 00 L2**	**BN80A4**	**M1LA4**	6260	6260	20800	24200	3580	251
10.5	470	2.8	133	—	—	**3/A 01 L2**	**BN80A4**	**M1LA4**	6250	6250	20800	22700	3570	261
13.0	380	1.7	107	—	—	**3/A 00 L2**	**BN80A4**	**M1LA4**	5810	5810	19400	22600	3320	251
13.9	355	1.6	100	—	—	**3/A 00 L2**	**BN80A4**	**M1LA4**	5680	5680	19000	22100	3240	251
15.7	315	1.8	88.6	—	—	**3/A 00 L2**	**BN80A4**	**M1LA4**	5450	5450	18400	21300	3120	251
17.3	285	2.3	80.2	—	—	**3/A 00 L2**	**BN80A4**	**M1LA4**	5280	5280	17800	20700	3010	251
19.6	250	2.6	71.0	—	—	**3/A 00 L2**	**BN80A4**	**M1LA4**	5060	5060	17200	20000	2890	251

P_1 = 0.75 kW

n_2 min^{-1}	M_{n2} Nm	f_S	i	Pt kW					Rn$_2$ [N] MC/PC	MZ/PZ	HC	HZ	FZ	
0.26	18800	2.5	5326	—	**3/V 11 ML4**	—	**BN80B4**	—	—	—	147800	150800	65000	355
0.28	16900	1.7	4959	—	**3/V 10 ML4**	—	**BN80B4**	—	—	—	116400	147600	65000	343
0.28	17400	2.9	5046	—	**3/V 13 ML4**	—	**BN80B4**	—	—	—	192000	231000	80000	367
0.30	15800	1.9	4637	—	**3/V 10 ML4**	—	**BN80B4**	—	—	—	115300	146200	65000	343
0.35	15800	1.9	4036	—	**3/V 10 ML4**	—	**BN80B4**	—	—	—	113100	143400	65000	343
0.39	12600	2.4	3570	—	**3/V 10 ML4**	—	**BN80B4**	—	—	—	111100	140900	65000	343
0.43	12800	2.1	3273	—	**3/V 10 ML4**	—	**BN80B4**	—	—	—	109700	139100	65000	343
0.47	11700	2.6	2987	—	**3/V 10 ML4**	—	**BN80B4**	—	—	—	108300	137300	65000	343
0.57	8300	1.3	2472	—	**3/V 07 L3**	—	**BN80B4**	—	40500	50700	91200	120000	45000	318
0.57	9710	2.8	2455	—	**3/V 10 ML4**	—	**BN80B4**	—	—	—	105300	133500	65000	343
0.65	7490	1.1	2139	—	**3/V 06 L3**	—	**BN80B4**	—	33100	37700	75500	87100	35000	306
0.65	7630	1.4	2150	—	**3/V 07 L3**	—	**BN80B4**	—	39700	49700	89400	117600	45000	318
0.71	6600	1.9	1964	—	**3/V 07 L3**	—	**BN80B4**	—	39200	49000	88300	116100	45000	318
0.79	6190	1.4	1768	—	**3/V 06 L3**	—	**BN80B4**	—	32200	36700	73400	84800	35000	306
0.91	5630	2.0	1545	—	**3/V 07 L3**	—	**BN80B4**	—	37900	47400	85300	112200	45000	318
0.98	4940	0.9	1431	—	**3/V 05 L3**	—	**BN80B4**	—	26300	30000	50600	60000	23600	294
0.99	5010	2.5	1411	—	**3/V 07 L3**	—	**BN80B4**	—	37400	46800	84200	110800	44100	318
1.0	5090	1.7	1395	—	**3/V 06 L3**	—	**BN80B4**	—	31100	35500	71000	82000	34200	306
1.1	4250	1.3	1231	—	**3/V 05 L3**	—	**BN80B4**	—	25700	29400	49500	58700	22500	294
1.2	4200	2.0	1153	—	**3/V 06 L3**	—	**BN80B4**	—	30300	34500	69100	79800	32100	306
1.2	4250	1.8	1212	—	**3/V 06 L3**	—	**BN80B4**	—	30500	34800	69600	80300	32600	306
1.2	4280	2.5	1159	—	**3/V 07 L3**	—	**BN80B4**	—	36400	45500	81900	107700	41300	318
1.3	3650	1.2	1057	—	**3/V 05 L3**	—	**BN80B4**	—	25100	28700	48500	57500	21400	294
1.3	4280	1.0	1116	—	**3/V 05 L3**	—	**BN80B4**	—	25300	29000	48900	57900	21700	294
1.4	3390	1.1	981	—	**3/V 04 L3**	—	**BN80B4**	—	24900	28400	48000	56900	20800	282
1.4	3620	2.6	992	—	**3/V 06 L3**	—	**BN80B4**	—	29700	33800	67600	78100	30500	306
1.5	3750	2.1	930	—	**3/V 06 L3**	—	**BN80B4**	—	29400	33500	67000	77300	29800	306
1.6	3430	1.3	894	—	**3/V 05 L3**	—	**BN80B4**	—	24500	28100	47300	56100	20200	294
1.8	2950	1.1	769	—	**3/V 04 L3**	—	**BN80B4**	—	24000	27500	46300	54900	19200	282
1.8	2930	1.4	793	—	**3/V 05 L3**	—	**BN80B4**	—	24100	27600	46500	55100	19400	294
1.8	2880	2.7	791	—	**3/V 06 L3**	—	**BN80B4**	—	28700	32700	65500	75600	28300	306
1.9	2610	1.0	736	—	**3/V 03 L3**	—	**BN80B4**	—	23900	27300	46000	54600	18900	270
2.0	2900	0.9	710	—	**3/V 04 L3**	—	**BN80B4**	—	23700	27100	45800	54300	18700	282
2.0	2850	1.4	715	—	**3/V 05 L3**	—	**BN80B4**	—	23800	27200	45900	54300	18800	294
2.0	2850	2.6	698	—	**3/V 06 L3**	—	**BN80B4**	—	28200	32200	64300	74200	27100	306
2.1	3120	1.9	671	—	—	**3/A 06 L2**	**BN80B4**	—	28000	32000	64000	73800	26800	307
2.2	2210	1.0	623	—	**3/V 03 L3**	—	**BN80B4**	—	23300	26600	45000	53300	17900	270
2.2	2300	1.5	623	—	**3/V 04 L3**	—	**BN80B4**	—	23300	26600	45000	53300	17900	282
2.2	2300	1.9	623	—	**3/V 05 L3**	—	**BN80B4**	—	23300	26600	45000	53300	17900	294
2.3	2840	2.1	611	—	—	**3/A 06 L2**	**BN80B4**	—	27700	31600	63100	72800	25900	307
2.4	2820	1.2	594	—	—	**3/A 05 L2**	**BN80B4**	—	23200	26500	44700	52900	17600	295
2.4	2350	2.1	576	—	**3/V 05 L3**	—	**BN80B4**	—	23100	26300	44500	52700	17400	294
2.5	2580	2.8	555	—	—	**3/A 06 L2**	**BN80B4**	—	27300	31100	62200	71800	25100	307
2.5	2180	1.4	568	—	**3/V 04 L3**	—	**BN80B4**	—	23000	26300	44400	52600	17400	282
2.6	1930	1.4	544	—	**3/V 03 L3**	—	**BN80B4**	—	22900	26100	44100	52300	17100	270
2.6	2110	1.9	529	—	**3/V 05 L3**	—	**BN80B4**	—	22800	26000	43900	52000	17000	294
2.7	2470	1.0	520	—	—	**3/A 04 L2**	**BN80B4**	—	22700	26000	43800	51900	16900	283
2.8	1950	1.0	502	—	**3/V 03 L3**	—	**BN80B4**	—	22600	25800	43600	51700	16700	270
2.8	1730	1.7	501	—	**3/V 04 L3**	—	**BN80B4**	—	22600	25800	43600	51700	16700	282
2.9	2330	1.7	491	—	—	**3/A 05 L2**	**BN80B4**	—	22500	25800	43500	51500	16500	295

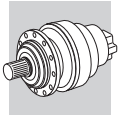

A

P_1 = 0.75 kW

n_2 min^{-1}	M_{n2} Nm	f_S	i	Pt kW					Rn_2 [N] MC/PC	MZ/PZ	HC	HZ	FZ	
3.0	2230	1.1	469	—	—	**3/A 04 L2**	**BN80B4**	—	22400	25600	43200	51200	16300	283
3.0	1630	1.4	460	—	**3/V 03 L3**	—	**BN80B4**	—	22300	25500	43100	51000	16200	270
3.0	1880	2.6	462	—	**3/V 05 L3**	—	**BN80B4**	—	22300	25500	43100	51000	16200	294
3.1	1740	2.1	453	—	**3/V 04 L3**	—	**BN80B4**	—	22300	25500	43000	50900	16100	282
3.3	2000	2.2	422	—	—	**3/A 05 L2**	**BN80B4**	—	22100	25200	42500	50400	15700	295
3.3	1670	1.1	430	—	**3/V 01 L3**	—	**BN80B4**	—	6840	6840	22600	24700	5270	260
3.4	1940	1.0	409	—	—	**3/A 03 L2**	**BN80B4**	—	22000	25100	42300	50200	15600	271
3.5	1890	1.7	398	—	—	**3/A 05 L2**	**BN80B4**	—	21900	25000	42200	50000	15400	295
3.5	1540	1.4	395	—	**3/V 03 L3**	—	**BN80B4**	—	21800	25000	42100	49900	15400	270
3.5	1620	2.3	396	—	**3/V 05 L3**	—	**BN80B4**	—	21900	25000	42100	50000	15400	294
3.6	1830	1.3	386	—	—	**3/A 04 L2**	**BN80B4**	—	21800	24900	42000	49800	15300	283
3.6	1470	2.4	384	—	**3/V 04 L3**	—	**BN80B4**	—	21800	24900	41900	49700	15200	282
4.0	1670	1.2	352	—	—	**3/A 03 L2**	**BN80B4**	—	21500	24600	41400	49100	14800	271
4.0	1660	1.5	349	—	—	**3/A 04 L2**	**BN80B4**	—	21500	24500	41400	49000	14800	283
4.3	1550	1.1	326	—	—	**3/A 03 L2**	**BN80B4**	—	21200	24300	41000	48600	14400	271
4.3	1560	2.3	329	—	—	**3/A 05 L2**	**BN80B4**	—	21300	24300	41000	48600	14500	295
4.4	1510	1.6	317	—	—	**3/A 04 L2**	**BN80B4**	—	21200	24200	40800	48400	14300	283
4.9	1340	2.1	283	—	—	**3/A 04 L2**	**BN80B4**	—	21000	24000	40500	48000	13800	283
5.0	1330	2.7	280	—	—	**3/A 05 L2**	**BN80B4**	—	21000	24000	40500	48000	13700	295
5.2	1280	1.4	269	—	—	**3/A 03 L2**	**BN80B4**	—	21000	24000	40500	48000	13500	271
5.5	1210	0.9	255	—	—	**3/A 01 L2**	**BN80B4**	—	6500	6500	21500	23500	4430	261
5.6	1190	2.9	250	—	—	**3/A 04 L2**	**BN80B4**	—	21000	24000	40500	48000	13200	283
6.4	1040	1.6	220	—	—	**3/A 03 L2**	**BN80B4**	—	21000	24000	40500	48000	12700	271
6.9	970	1.3	204	—	—	**3/A 01 L2**	**BN80B4**	—	6500	6500	21500	23500	4120	261
7.6	870	1.2	184	—	—	**3/A 01 L2**	**BN80B4**	—	6500	6500	21500	23500	3980	261
7.7	860	2.1	182	—	—	**3/A 03 L2**	**BN80B4**	—	21000	24000	40500	48000	11900	271
8.4	790	1.5	166	—	—	**3/A 01 L2**	**BN80B4**	—	6500	6500	21500	23500	3840	261
10.5	630	2.1	133	—	—	**3/A 01 L2**	**BN80B4**	—	6250	6250	20800	22700	3570	261
13.1	510	1.3	107	—	—	**3/A 00 L2**	**BN80B4**	—	5810	5810	19400	22600	3320	251
13.7	485	2.4	102	—	—	**3/A 01 L2**	**BN80B4**	—	5710	5710	19100	20900	3260	261
14.0	475	1.2	100	—	—	**3/A 00 L2**	**BN80B4**	—	5680	5680	19000	22100	3240	251
15.8	420	1.3	88.6	—	—	**3/A 00 L2**	**BN80B4**	—	5450	5450	18400	21300	3120	251
17.5	380	1.7	80.2	—	—	**3/A 00 L2**	**BN80B4**	—	5280	5280	17800	20700	3010	251
19.7	335	1.9	71.0	—	—	**3/A 00 L2**	**BN80B4**	—	5060	5060	17200	20000	2890	251
22.9	290	2.2	61.2	—	—	**3/A 00 L2**	**BN80B4**	—	4820	4820	16400	19100	2750	251
27.0	245	2.2	51.8	—	—	**3/A 00 L2**	**BN80B4**	—	4560	4560	15600	18200	2610	251
35	190	2.9	39.6	—	—	**3/A 00 L2**	**BN80B4**	—	4170	4170	14400	16800	2380	251

P_1 = 1.1 kW

n_2 min^{-1}	M_{n2} Nm	f_S	i	Pt kW					Rn_2 [N] MC/PC	MZ/PZ	HC	HZ	FZ	
0.26	28100	1.7	5326	—	**3/V 11 ML4**	—	**BN90S4**	—	—	—	147800	150800	65000	355
0.28	25100	1.1	4959	—	**3/V 10 ML4**	—	**BN90S4**	—	—	—	116400	147600	65000	343
0.28	25900	2.0	5046	—	**3/V 13 ML4**	—	**BN90S4**	—	—	—	192000	231000	80000	367
0.30	23500	1.3	4637	—	**3/V 10 ML4**	—	**BN90S4**	—	—	—	115300	146200	65000	343
0.31	24200	2.4	4536	—	**3/V 13 ML4**	—	**BN90S4**	—	—	—	192000	231000	80000	367
0.32	23600	2.0	4410	—	**3/V 11 ML4**	—	**BN90S4**	—	—	—	143900	146800	65000	355
0.34	23500	1.3	4036	—	**3/V 10 ML4**	—	**BN90S4**	—	—	—	113100	143400	65000	343
0.34	21100	2.3	4106	—	**3/V 11 ML4**	—	**BN90S4**	—	—	—	142400	145300	65000	355
0.34	21600	2.8	4046	—	**3/V 13 ML4**	—	**BN90S4**	—	—	—	192000	231000	80000	367
0.39	18800	1.6	3570	—	**3/V 10 ML4**	—	**BN90S4**	—	—	—	111100	140900	65000	343
0.39	18300	2.3	3557	—	**3/V 11 ML4**	—	**BN90S4**	—	—	—	139500	142400	65000	355
0.40	20500	2.8	3515	—	**3/V 13 ML4**	—	**BN90S4**	—	—	—	192000	231000	80000	367
0.42	19100	1.4	3273	—	**3/V 10 ML4**	—	**BN90S4**	—	—	—	109700	139100	65000	343
0.43	18800	2.5	3222	—	**3/V 11 ML4**	—	**BN90S4**	—	—	—	137600	140400	65000	355
0.43	19000	2.8	3263	—	**3/V 13 ML4**	—	**BN90S4**	—	—	—	192000	231000	80000	367
0.45	17600	2.7	3063	—	**3/V 11 ML4**	—	**BN90S4**	—	—	—	136600	139400	65000	355
0.47	17400	1.7	2987	—	**3/V 10 ML4**	—	**BN90S4**	—	—	—	108300	137300	65000	343
0.57	14500	1.9	2455	—	**3/V 10 ML4**	—	**BN90S4**	—	—	—	105300	133500	65000	343
0.64	12600	2.2	2156	—	**3/V 10 ML4**	—	**BN90S4**	—	—	—	103400	131100	65000	343
0.65	11400	1.0	2150	—	**3/V 07 L3**	—	**BN90S4**	—	39700	49700	89400	117600	45000	318

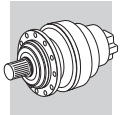

P_1 = 1.1 kW

n_2 min^{-1}	M_{n2} Nm	f_S	i	Pt kW					Rn_2 [N] MC/PC	MZ/PZ	HC	HZ	FZ	
0.69	11700	2.5	2016	—	**3/V 10 ML4**	**—**	**BN90S4**	**—**	—	—	102400	129800	65000	343
0.71	9830	1.3	1964	—	**3/V 07 L3**	**—**	**BN90S4**	**—**	39200	49000	88300	116100	45000	318
0.75	10800	2.5	1855	—	**3/V 10 ML4**	**—**	**BN90S4**	**—**	—	—	101200	128300	65000	343
0.79	9230	0.9	1768	—	**3/V 06 L3**	**—**	**BN90S4**	**—**	32200	36700	73400	84800	35000	306
0.86	9530	2.9	1617	—	**3/V 10 ML4**	**—**	**BN90S4**	**—**	—	—	99200	125800	65000	343
0.90	8400	1.3	1545	—	**3/V 07 L3**	**—**	**BN90S4**	**—**	37900	47400	85300	112200	45000	318
0.99	7470	1.6	1411	—	**3/V 07 L3**	**—**	**BN90S4**	**—**	37400	46800	84200	110800	44100	318
1.0	7580	1.1	1395	—	**3/V 06 L3**	**—**	**BN90S4**	**—**	31100	35500	71000	82000	34200	306
1.1	6330	1.2	1212	—	**3/V 06 L3**	**—**	**BN90S4**	**—**	30500	34800	69600	80300	32600	306
1.1	6820	2.1	1288	—	**3/V 07 L3**	**—**	**BN90S4**	**—**	36900	46200	83100	109300	42800	318
1.2	6270	1.3	1153	—	**3/V 06 L3**	**—**	**BN90S4**	**—**	30300	34500	69100	79800	32100	306
1.2	6380	1.7	1159	—	**3/V 07 L3**	**—**	**BN90S4**	**—**	36400	45500	81900	107700	41300	318
1.4	5390	1.8	992	—	**3/V 06 L3**	**—**	**BN90S4**	**—**	29700	33800	67600	78100	30500	306
1.4	5520	2.6	1015	—	**3/V 07 L3**	**—**	**BN90S4**	**—**	35700	44600	80300	105700	39500	318
1.5	5590	1.4	930	—	**3/V 06 L3**	**—**	**BN90S4**	**—**	29400	33500	67000	77300	29800	306
1.5	5070	2.4	920	—	**3/V 07 L3**	**—**	**BN90S4**	**—**	35200	44000	79200	104200	38200	318
1.8	4370	1.0	793	—	**3/V 05 L3**	**—**	**BN90S4**	**—**	24100	27600	46500	55100	19400	294
1.8	4300	1.8	791	—	**3/V 06 L3**	**—**	**BN90S4**	**—**	28700	32700	65500	75600	28300	306
1.8	4640	2.1	773	—	**3/V 07 L3**	**—**	**BN90S4**	**—**	34300	42900	77300	101600	36100	318
1.9	4240	1.0	715	—	**3/V 05 L3**	**—**	**BN90S4**	**—**	23800	27200	45900	54300	18800	294
2.0	4240	1.8	698	—	**3/V 06 L3**	**—**	**BN90S4**	**—**	28200	32200	64300	74200	27100	306
2.1	4650	1.3	671	—	**—**	**3/A 06 L2**	**BN90S4**	**—**	28000	32000	64000	73800	26800	307
2.1	3970	2.4	661	—	**3/V 06 L3**	**—**	**BN90S4**	**—**	28000	31900	63800	73700	26600	306
2.2	3430	1.0	623	—	**3/V 04 L3**	**—**	**BN90S4**	**—**	23300	26600	45000	53300	17900	282
2.2	3430	1.3	623	—	**3/V 05 L3**	**—**	**BN90S4**	**—**	23300	26600	45000	53300	17900	294
2.3	4230	1.4	611	—	**—**	**3/A 06 L2**	**BN90S4**	**—**	27700	31600	63100	72800	25900	307
2.4	3250	1.0	568	—	**3/V 04 L3**	**—**	**BN90S4**	**—**	23000	26300	44400	52600	17400	282
2.4	3500	1.4	576	—	**3/V 05 L3**	**—**	**BN90S4**	**—**	23100	26300	44500	52700	17400	294
2.4	3420	2.5	569	—	**3/V 06 L3**	**—**	**BN90S4**	**—**	27400	31200	62500	72100	25300	306
2.5	3850	1.9	555	—	**—**	**3/A 06 L2**	**BN90S4**	**—**	27300	31100	62200	71800	25100	307
2.6	2880	0.9	544	—	**3/V 03 L3**	**—**	**BN90S4**	**—**	22900	26100	44100	52300	17100	270
2.6	3140	1.2	529	—	**3/V 05 L3**	**—**	**BN90S4**	**—**	22800	26000	43900	52000	17000	294
2.6	3170	2.4	527	—	**3/V 06 L3**	**—**	**BN90S4**	**—**	27100	30900	61800	71300	24700	306
2.8	3470	1.1	491	—	**—**	**3/A 05 L2**	**BN90S4**	**—**	22500	25800	43500	51500	16500	295
2.8	3500	2.0	505	—	**—**	**3/A 06 L2**	**BN90S4**	**—**	26900	30700	61400	70900	24400	307
2.8	2580	1.2	501	—	**3/V 04 L3**	**—**	**BN90S4**	**—**	22600	25800	43600	51700	16700	282
3.0	2430	0.9	460	—	**3/V 03 L3**	**—**	**BN90S4**	**—**	22300	25500	43100	51000	16200	270
3.0	2810	1.7	462	—	**3/V 05 L3**	**—**	**BN90S4**	**—**	22300	25500	43100	51000	16200	294
3.1	2590	1.4	453	—	**3/V 04 L3**	**—**	**BN90S4**	**—**	22300	25500	43000	50900	16100	282
3.2	3010	2.6	435	—	**—**	**3/A 06 L2**	**BN90S4**	**—**	26400	30100	60100	69400	23200	307
3.3	2990	1.5	422	—	**—**	**3/A 05 L2**	**BN90S4**	**—**	22100	25200	42500	50400	15700	295
3.5	2820	1.1	398	—	**—**	**3/A 05 L2**	**BN90S4**	**—**	21900	25000	42200	50000	15400	295
3.5	2290	1.0	395	—	**3/V 03 L3**	**—**	**BN90S4**	**—**	21800	25000	42100	49900	15400	270
3.5	2410	1.6	396	—	**3/V 05 L3**	**—**	**BN90S4**	**—**	21900	25000	42100	50000	15400	294
3.6	2690	2.1	388	—	**—**	**3/A 06 L2**	**BN90S4**	**—**	25900	29600	59100	68300	22300	307
3.6	2200	1.6	384	—	**3/V 04 L3**	**—**	**BN90S4**	**—**	21800	24900	41900	49700	15200	282
3.7	2630	2.3	380	—	**—**	**3/A 06 L2**	**BN90S4**	**—**	25900	29500	59000	68100	22200	307
4.0	2470	1.0	349	—	**—**	**3/A 04 L2**	**BN90S4**	**—**	21500	24500	41400	49000	14800	283
4.2	2330	1.6	329	—	**—**	**3/A 05 L2**	**BN90S4**	**—**	21300	24300	41000	48600	14500	295
4.3	2220	3.0	321	—	**—**	**3/A 06 L2**	**BN90S4**	**—**	25200	28800	57500	66400	20900	307
4.4	2240	1.1	317	—	**—**	**3/A 04 L2**	**BN90S4**	**—**	21200	24200	40800	48400	14300	283
4.9	2000	1.4	283	—	**—**	**3/A 04 L2**	**BN90S4**	**—**	21000	24000	40500	48000	13800	283
5.0	1980	1.8	280	—	**—**	**3/A 05 L2**	**BN90S4**	**—**	21000	24000	40500	48000	13700	295
5.2	1900	1.0	269	—	**—**	**3/A 03 L2**	**BN90S4**	**—**	21000	24000	40500	48000	13500	271
5.2	1850	3.0	267	—	**—**	**3/A 06 L2**	**BN90S4**	**—**	25000	28500	57000	65800	19700	307
5.6	1770	2.0	250	—	**—**	**3/A 04 L2**	**BN90S4**	**—**	21000	24000	40500	48000	13200	283
5.8	1710	2.5	241	—	**—**	**3/A 05 L2**	**BN90S4**	**—**	21000	24000	40500	48000	13000	295
6.2	1600	2.2	226	—	**—**	**3/A 04 L2**	**BN90S4**	**—**	21000	24000	40500	48000	12800	283
6.3	1560	1.1	220	—	**—**	**3/A 03 L2**	**BN90S4**	**—**	21000	24000	40500	48000	12700	271
6.6	1500	2.1	212	—	**—**	**3/A 05 L2**	**BN90S4**	**—**	21000	24000	40500	48000	12500	295
6.8	1440	0.9	204	—	**—**	**3/A 01 L2**	**BN90S4**	**—**	6500	6500	21500	23500	4120	261
6.8	1450	2.4	205	—	**—**	**3/A 04 L2**	**BN90S4**	**—**	21000	24000	40500	48000	12400	283
7.6	1290	1.4	182	—	**—**	**3/A 03 L2**	**BN90S4**	**—**	21000	24000	40500	48000	11900	271
7.9	1240	2.9	175	—	**—**	**3/A 05 L2**	**BN90S4**	**—**	21000	24000	40500	48000	11700	295
8.0	1230	2.4	174	—	**—**	**3/A 04 L2**	**BN90S4**	**—**	21000	24000	40500	48000	11700	283

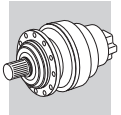

A

P_1 = 1.1 kW

n_2 min^{-1}	M_{n2} Nm	f_S	i	Pt kW					Rn_2 [N] MC/PC	MZ/PZ	HC	HZ	FZ	
8.4	1170	1.0	166	—	—	**3/A 01 L2**	**BN90S4**	—	6500	6500	21500	23500	3840	261
8.6	1150	2.5	162	—	—	**3/A 04 L2**	**BN90S4**	—	21000	24000	40500	48000	11400	283
8.6	1150	2.5	162	—	—	**3/A 05 L2**	**BN90S4**	—	21000	24000	40500	48000	11400	295
9.3	1050	2.3	149	—	—	**3/A 04 L2**	**BN90S4**	—	21000	24000	40400	47900	11100	283
10.5	940	1.4	133	—	—	**3/A 01 L2**	**BN90S4**	—	6250	6250	20800	22700	3570	261
10.8	910	3.0	129	—	—	**3/A 04 L2**	**BN90S4**	—	20000	22800	38700	45900	10600	283
11.9	830	2.9	117	—	—	**3/A 04 L2**	**BN90S4**	—	19300	22100	37600	44500	10300	283
13.6	720	1.6	102	—	—	**3/A 01 L2**	**BN90S4**	—	5710	5710	19100	20900	3260	261
14.3	690	2.5	96.9	—	—	**3/A 03 L2**	**BN90S4**	—	18200	20700	35500	42100	9630	271
15.7	630	2.6	88.5	—	—	**3/A 03 L2**	**BN90S4**	—	17600	20100	34600	41000	9340	271
17.1	580	2.3	81.3	—	—	**3/A 01 L2**	**BN90S4**	—	5300	5300	17900	19600	3030	261
17.3	570	1.1	80.2	—	—	**3/A 00 L2**	**BN90S4**	—	5280	5280	17800	20700	3010	251
18.7	530	2.2	74.2	—	—	**3/A 01 L2**	**BN90S4**	—	5140	5140	17400	19000	2940	261
19.6	500	1.3	71.0	—	—	**3/A 00 L2**	**BN90S4**	—	5060	5060	17200	20000	2890	251
22.7	435	1.5	61.2	—	—	**3/A 00 L2**	**BN90S4**	—	4820	4820	16400	19100	2750	251
23.4	420	3.0	59.4	—	—	**3/A 01 L2**	**BN90S4**	—	4770	4770	16300	17800	2730	261
26.8	365	1.5	51.8	—	—	**3/A 00 L2**	**BN90S4**	—	4560	4560	15600	18200	2610	251
28.3	345	2.4	49.1	—	—	**3/A 01 L2**	**BN90S4**	—	4480	4480	15400	16800	2560	261
32	310	3.0	43.9	—	—	**3/A 01 L2**	**BN90S4**	—	4320	4320	14900	16300	2470	261
33	295	2.2	41.5	—	—	**3/A 00 L2**	**BN90S4**	—	4240	4240	14600	17000	2420	251
35	280	2.0	39.6	—	—	**3/A 00 L2**	**BN90S4**	—	4170	4170	14400	16800	2380	251
39	255	3.0	35.8	—	—	**3/A 01 L2**	**BN90S4**	—	4030	4030	14000	15300	2300	261
44	225	2.9	31.7	—	—	**3/A 00 L2**	**BN90S4**	—	3870	3870	13500	15700	2210	251

P_1 = 1.5 kW

n_2 min^{-1}	M_{n2} Nm	f_S	i	Pt kW					Rn_2 [N] MC/PC	MZ/PZ	HC	HZ	FZ	
0.26	37700	1.3	5326	—	**3/V 11 ML4**	—	**BN90LA4**	—	—	—	147800	150800	65000	355
0.28	34800	1.5	5046	—	**3/V 13 ML4**	—	**BN90LA4**	—	—	—	192000	231000	80000	367
0.30	31500	1.0	4637	—	**3/V 10 ML4**	—	**BN90LA4**	—	—	—	115300	146200	65000	343
0.31	32500	1.8	4536	—	**3/V 13 ML4**	—	**BN90LA4**	—	—	—	192000	231000	80000	367
0.32	31600	1.5	4410	—	**3/V 11 ML4**	—	**BN90LA4**	—	—	—	143900	146800	65000	355
0.34	28300	1.7	4106	—	**3/V 11 ML4**	—	**BN90LA4**	—	—	—	142400	145300	65000	355
0.35	31600	1.0	4036	—	**3/V 10 ML4**	—	**BN90LA4**	—	—	—	113100	143400	65000	343
0.35	29000	2.1	4046	—	**3/V 13 ML4**	—	**BN90LA4**	—	—	—	192000	231000	80000	367
0.39	25300	1.2	3570	—	**3/V 10 ML4**	—	**BN90LA4**	—	—	—	111100	140900	65000	343
0.40	24500	1.7	3557	—	**3/V 11 ML4**	—	**BN90LA4**	—	—	—	139500	142400	65000	355
0.40	27500	2.1	3515	—	**3/V 13 ML4**	—	**BN90LA4**	—	—	—	192000	231000	80000	367
0.43	25600	1.1	3273	—	**3/V 10 ML4**	—	**BN90LA4**	—	—	—	109700	139100	65000	343
0.43	25500	2.1	3263	—	**3/V 13 ML4**	—	**BN90LA4**	—	—	—	192000	231000	80000	367
0.44	25200	1.9	3222	—	**3/V 11 ML4**	—	**BN90LA4**	—	—	—	137600	140400	65000	355
0.46	23700	2.0	3063	—	**3/V 11 ML4**	—	**BN90LA4**	—	—	—	136600	139400	65000	355
0.47	23400	1.3	2987	—	**3/V 10 ML4**	—	**BN90LA4**	—	—	—	108300	137300	65000	343
0.51	19900	3.0	2773	—	**3/V 13 ML4**	—	**BN90LA4**	—	—	—	192000	228600	80000	367
0.53	20800	2.3	2663	—	**3/V 11 ML4**	—	**BN90LA4**	—	—	—	133900	136600	65000	355
0.57	19400	1.4	2455	—	**3/V 10 ML4**	—	**BN90LA4**	—	—	—	105300	133500	65000	343
0.65	16900	1.7	2156	—	**3/V 10 ML4**	—	**BN90LA4**	—	—	—	103400	131100	65000	343
0.70	15800	1.9	2016	—	**3/V 10 ML4**	—	**BN90LA4**	—	—	—	102400	129800	65000	343
0.72	13200	0.9	1964	—	**3/V 07 L3**	—	**BN90LA4**	—	39200	49000	88300	116100	45000	318
0.76	14500	1.9	1855	—	**3/V 10 ML4**	—	**BN90LA4**	—	—	—	101200	128300	65000	343
0.87	12800	2.2	1617	—	**3/V 10 ML4**	—	**BN90LA4**	—	—	—	99200	125800	65000	343
0.91	11300	1.0	1545	—	**3/V 07 L3**	—	**BN90LA4**	—	37900	47400	85300	112200	45000	318
1.0	10000	1.2	1411	—	**3/V 07 L3**	—	**BN90LA4**	—	37400	46800	84200	110800	44100	318
1.1	9150	1.6	1288	—	**3/V 07 L3**	—	**BN90LA4**	—	36900	46200	83100	109300	42800	318
1.2	8410	1.0	1153	—	**3/V 06 L3**	—	**BN90LA4**	—	30300	34500	69100	79800	32100	306
1.2	8490	0.9	1212	—	**3/V 06 L3**	—	**BN90LA4**	—	30500	34800	69600	80300	32600	306
1.2	8560	1.2	1159	—	**3/V 07 L3**	—	**BN90LA4**	—	36400	45500	81900	107700	41300	318
1.4	7240	1.3	992	—	**3/V 06 L3**	—	**BN90LA4**	—	29700	33800	67600	78100	30500	306
1.4	7400	1.9	1015	—	**3/V 07 L3**	—	**BN90LA4**	—	35700	44600	80300	105700	39500	318
1.5	7500	1.1	930	—	**3/V 06 L3**	—	**BN90LA4**	—	29400	33500	67000	77300	29800	306
1.5	6800	1.8	920	—	**3/V 07 L3**	—	**BN90LA4**	—	35200	44000	79200	104200	38200	318

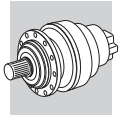

P_1 = 1.5 kW

n_2 min^{-1}	M_{n2} Nm	f_S	i	Pt kW					Rn_2 [N] MC/PC	MZ/PZ	HC	HZ	FZ	
1.8	5770	1.3	791	—	**3/V 06 L3**	**—**	**BN90LA4**	**—**	28700	32700	65500	75600	28300	306
1.8	6230	1.6	773	—	**3/V 07 L3**	**—**	**BN90LA4**	**—**	34300	42900	77300	101600	36100	318
1.9	5620	2.5	761	—	**3/V 07 L3**	**—**	**BN90LA4**	**—**	34300	42800	77100	101400	35900	318
2.0	5690	1.3	698	—	**3/V 06 L3**	**—**	**BN90LA4**	**—**	28200	32200	64300	74200	27100	306
2.1	6240	1.0	671	—	**—**	**3/A 06 L2**	**BN90LA4**	**—**	28000	32000	64000	73800	26800	307
2.1	5330	1.8	661	—	**3/V 06 L3**	**—**	**BN90LA4**	**—**	28000	31900	63800	73700	26600	306
2.2	4840	3.0	655	—	**3/V 07 L3**	**—**	**BN90LA4**	**—**	33500	41900	75500	99300	34100	318
2.3	5680	1.0	611	—	**—**	**3/A 06 L2**	**BN90LA4**	**—**	27700	31600	63100	72800	25900	307
2.3	4600	1.0	623	—	**3/V 05 L3**	**—**	**BN90LA4**	**—**	23300	26600	45000	53300	17900	294
2.4	4700	1.0	576	—	**3/V 05 L3**	**—**	**BN90LA4**	**—**	23100	26300	44500	52700	17400	294
2.5	5160	1.4	555	—	**—**	**3/A 06 L2**	**BN90LA4**	**—**	27300	31100	62200	71800	25100	307
2.5	4590	1.9	569	—	**3/V 06 L3**	**—**	**BN90LA4**	**—**	27400	31200	62500	72100	25300	306
2.7	4210	0.9	529	—	**3/V 05 L3**	**—**	**BN90LA4**	**—**	22800	26000	43900	52000	17000	294
2.7	4250	1.8	527	—	**3/V 06 L3**	**—**	**BN90LA4**	**—**	27100	30900	61800	71300	24700	306
2.8	4700	1.5	505	—	**—**	**3/A 06 L2**	**BN90LA4**	**—**	26900	30700	61400	70900	24400	307
3.1	3480	1.1	453	—	**3/V 04 L3**	**—**	**BN90LA4**	**—**	22300	25500	43000	50900	16100	282
3.1	3770	1.3	462	—	**3/V 05 L3**	**—**	**BN90LA4**	**—**	22300	25500	43100	51000	16200	294
3.2	4050	1.9	435	—	**—**	**3/A 06 L2**	**BN90LA4**	**—**	26400	30100	60100	69400	23200	307
3.2	4080	2.2	439	—	**—**	**3/A 07 L2**	**BN90LA4**	**—**	31700	39600	71300	93800	29900	319
3.3	4010	1.1	422	—	**—**	**3/A 05 L2**	**BN90LA4**	**—**	22100	25200	42500	50400	15700	295
3.3	3480	2.5	427	—	**3/V 06 L3**	**—**	**BN90LA4**	**—**	26300	30000	59900	69200	23000	306
3.5	3770	2.4	405	—	**—**	**3/A 07 L2**	**BN90LA4**	**—**	31300	39100	70500	92700	29100	319
3.6	3610	1.6	388	—	**—**	**3/A 06 L2**	**BN90LA4**	**—**	25900	29600	59100	68300	22300	307
3.6	3230	1.2	396	—	**3/V 05 L3**	**—**	**BN90LA4**	**—**	21900	25000	42100	50000	15400	294
3.6	3220	2.4	395	—	**3/V 06 L3**	**—**	**BN90LA4**	**—**	26000	29600	59300	68400	22400	306
3.7	3530	1.7	380	—	**—**	**3/A 06 L2**	**BN90LA4**	**—**	25900	29500	59000	68100	22200	307
3.7	2950	1.2	384	—	**3/V 04 L3**	**—**	**BN90LA4**	**—**	21800	24900	41900	49700	15200	282
3.7	3220	2.8	386	—	**3/V 07 L3**	**—**	**BN90LA4**	**—**	31100	38900	70000	92100	28600	318
4.3	3120	1.2	329	—	**—**	**3/A 05 L2**	**BN90LA4**	**—**	21300	24300	41000	48600	14500	295
4.4	2990	2.2	321	—	**—**	**3/A 06 L2**	**BN90LA4**	**—**	25200	28800	57500	66400	20900	307
5.0	2690	1.1	283	—	**—**	**3/A 04 L2**	**BN90LA4**	**—**	21000	24000	40500	48000	13800	283
5.0	2660	1.4	280	—	**—**	**3/A 05 L2**	**BN90LA4**	**—**	21000	24000	40500	48000	13700	295
5.3	2480	2.2	267	—	**—**	**3/A 06 L2**	**BN90LA4**	**—**	25000	28500	57000	65800	19700	307
5.6	2370	1.5	250	—	**—**	**3/A 04 L2**	**BN90LA4**	**—**	21000	24000	40500	48000	13200	283
5.9	2290	1.9	241	—	**—**	**3/A 05 L2**	**BN90LA4**	**—**	21000	24000	40500	48000	13000	295
6.2	2150	1.6	226	—	**—**	**3/A 04 L2**	**BN90LA4**	**—**	21000	24000	40500	48000	12800	283
6.7	2010	1.5	212	—	**—**	**3/A 05 L2**	**BN90LA4**	**—**	21000	24000	40500	48000	12500	295
6.9	1950	1.8	205	—	**—**	**3/A 04 L2**	**BN90LA4**	**—**	21000	24000	40500	48000	12400	283
7.1	1840	3.0	198	—	**—**	**3/A 06 L2**	**BN90LA4**	**—**	25000	28500	57000	65800	17800	307
7.7	1730	1.1	182	—	**—**	**3/A 03 L2**	**BN90LA4**	**—**	21000	24000	40500	48000	11900	271
8.1	1650	1.8	174	—	**—**	**3/A 04 L2**	**BN90LA4**	**—**	21000	24000	40500	48000	11700	283
8.1	1660	2.2	175	—	**—**	**3/A 05 L2**	**BN90LA4**	**—**	21000	24000	40500	48000	11700	295
8.7	1540	1.9	162	—	**—**	**3/A 04 L2**	**BN90LA4**	**—**	21000	24000	40500	48000	11400	283
8.7	1540	1.9	162	—	**—**	**3/A 05 L2**	**BN90LA4**	**—**	21000	24000	40500	48000	11400	295
9.5	1420	1.7	149	—	**—**	**3/A 04 L2**	**BN90LA4**	**—**	21000	24000	40400	47900	11100	283
10.0	1340	2.7	141	—	**—**	**3/A 05 L2**	**BN90LA4**	**—**	20600	23500	39700	47100	10900	295
10.6	1260	1.0	133	—	**—**	**3/A 01 L2**	**BN90LA4**	**—**	6250	6250	20800	22700	3570	261
10.9	1230	2.2	129	—	**—**	**3/A 04 L2**	**BN90LA4**	**—**	20000	22800	38700	45900	10600	283
12.1	1110	2.2	117	—	**—**	**3/A 04 L2**	**BN90LA4**	**—**	19300	22100	37600	44500	10300	283
13.8	970	1.2	102	—	**—**	**3/A 01 L2**	**BN90LA4**	**—**	5710	5710	19100	20900	3260	261
13.8	970	2.6	102	—	**—**	**3/A 04 L2**	**BN90LA4**	**—**	18500	21100	36100	42700	9790	283
14.6	920	1.8	96.9	—	**—**	**3/A 03 L2**	**BN90LA4**	**—**	18200	20700	35500	42100	9630	271
15.5	860	2.8	90.7	—	**—**	**3/A 04 L2**	**BN90LA4**	**—**	17800	20300	34800	41300	9420	283
15.9	840	2.0	88.5	—	**—**	**3/A 03 L2**	**BN90LA4**	**—**	17600	20100	34600	41000	9340	271
17.3	770	1.7	81.3	—	**—**	**3/A 01 L2**	**BN90LA4**	**—**	5300	5300	17900	19600	3030	261
19.0	700	1.6	74.2	—	**—**	**3/A 01 L2**	**BN90LA4**	**—**	5140	5140	17400	19000	2940	261
19.3	700	2.6	73.2	—	**—**	**3/A 03 L2**	**BN90LA4**	**—**	16500	18900	32700	38700	8770	271
19.9	670	1.0	71.0	—	**—**	**3/A 00 L2**	**BN90LA4**	**—**	5060	5060	17200	20000	2890	251
22.4	600	2.6	62.9	—	**—**	**3/A 03 L2**	**BN90LA4**	**—**	15700	18000	31200	37000	8340	271
23.0	580	1.1	61.2	—	**—**	**3/A 00 L2**	**BN90LA4**	**—**	4820	4820	16400	19100	2750	251
23.7	560	2.2	59.4	—	**—**	**3/A 01 L2**	**BN90LA4**	**—**	4770	4770	16300	17800	2730	261
26.0	510	2.3	54.2	—	**—**	**3/A 01 L2**	**BN90LA4**	**—**	4630	4630	15800	17300	2650	261
27.2	490	1.1	51.8	—	**—**	**3/A 00 L2**	**BN90LA4**	**—**	4560	4560	15600	18200	2610	251
28.7	465	1.8	49.1	—	**—**	**3/A 01 L2**	**BN90LA4**	**—**	4480	4480	15400	16800	2560	261
32	415	2.2	43.9	—	**—**	**3/A 01 L2**	**BN90LA4**	**—**	4320	4320	14900	16300	2470	261

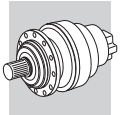

A

P_1 = 1.5 kW

n_2 min^{-1}	M_{n2} Nm	f_S	i	Pt kW					Rn_2 [N] MC/PC	MZ/PZ	HC	HZ	FZ	
34	395	1.6	41.5	—	—	**3/A 00 L2**	**BN90LA4**	—	4240	4240	14600	17000	2420	251
35	380	2.3	40.1	—	—	**3/A 01 L2**	**BN90LA4**	—	4190	4190	14500	15800	2390	261
36	375	1.5	39.6	—	—	**3/A 00 L2**	**BN90LA4**	—	4170	4170	14400	16800	2380	251
39	340	2.2	35.8	—	—	**3/A 01 L2**	**BN90LA4**	—	4030	4030	14000	15300	2300	261
44	300	2.2	31.7	—	—	**3/A 00 L2**	**BN90LA4**	—	3870	3870	13500	15700	2210	251
60	220	2.6	23.4	—	—	**3/A 00 L2**	**BN90LA4**	—	3500	3500	12300	14300	2000	251
74	180	2.6	19.1	—	—	**3/A 00 L2**	**BN90LA4**	—	3270	3270	11600	13500	1870	251

P_1 = 1.85 kW

n_2 min^{-1}	M_{n2} Nm	f_S	i	Pt kW					Rn_2 [N] MC/PC	MZ/PZ	HC	HZ	FZ	
0.26	46900	1.0	5326		**3/V 11 ML4**		**BN90LB4**		0	0	147800	150800	65000	355
0.28	43300	1.2	5046		**3/V 13 ML4**		**BN90LB4**		0	0	192000	231000	80000	367
0.31	40500	1.4	4536		**3/V 13 ML4**		**BN90LB4**		0	0	192000	231000	80000	367
0.32	39400	1.2	4410		**3/V 11 ML4**		**BN90LB4**		0	0	143900	146800	65000	355
0.34	35200	1.4	4106		**3/V 11 ML4**		**BN90LB4**		0	0	142400	145300	65000	355
0.34	36100	1.7	4046		**3/V 13 ML4**		**BN90LB4**		0	0	192000	231000	80000	367
0.39	31400	1.0	3570		**3/V 10 ML4**		**BN90LB4**		0	0	111100	140900	65000	343
0.39	30500	1.4	3557		**3/V 11 ML4**		**BN90LB4**		0	0	139500	142400	65000	355
0.40	34200	1.7	3515		**3/V 13 ML4**		**BN90LB4**		0	0	192000	231000	80000	367
0.43	31400	1.5	3222		**3/V 11 ML4**		**BN90LB4**		0	0	137600	140400	65000	355
0.43	31800	1.7	3263		**3/V 13 ML4**		**BN90LB4**		0	0	192000	231000	80000	367
0.45	29500	1.6	3063		**3/V 11 ML4**		**BN90LB4**		0	0	136600	139400	65000	355
0.47	29100	1.0	2987		**3/V 10 ML4**		**BN90LB4**		0	0	108300	137300	65000	343
0.50	24700	2.4	2773		**3/V 13 ML4**		**BN90LB4**		0	0	192000	228600	80000	367
0.52	25900	1.8	2663		**3/V 11 ML4**		**BN90LB4**		0	0	133900	136600	65000	355
0.57	24200	1.1	2455		**3/V 10 ML4**		**BN90LB4**		0	0	105300	133500	65000	343
0.64	21000	1.3	2156		**3/V 10 ML4**		**BN90LB4**		0	0	103400	131100	65000	343
0.69	19600	1.5	2016		**3/V 10 ML4**		**BN90LB4**		0	0	102400	129800	65000	343
0.75	18100	1.5	1855		**3/V 10 ML4**		**BN90LB4**		0	0	101200	128300	65000	343
0.86	15900	1.8	1617		**3/V 10 ML4**		**BN90LB4**		0	0	99200	125800	65000	343
1.0	12500	1.0	1411		**3/V 07 L3**		**BN90LB4**		37400	46800	84200	110800	44100	318
1.1	11400	1.3	1288		**3/V 07 L3**		**BN90LB4**		36900	46200	83100	109300	42800	318
1.2	10700	1.0	1159		**3/V 07 L3**		**BN90LB4**		36400	45500	81900	107700	41300	318
1.4	9010	1.0	992		**3/V 06 L3**		**BN90LB4**		29700	33800	67600	78100	30500	306
1.4	9220	1.6	1015		**3/V 07 L3**		**BN90LB4**		35700	44600	80300	105700	39500	318
1.5	8460	1.5	920		**3/V 07 L3**		**BN90LB4**		35200	44000	79200	104200	38200	318
1.8	7180	1.1	791		**3/V 06 L3**		**BN90LB4**		28700	32700	65500	75600	28300	306
1.8	7000	2.0	761		**3/V 07 L3**		**BN90LB4**		34300	42800	77100	101400	35900	318
1.8	7760	1.3	773		**3/V 07 L3**		**BN90LB4**		34300	42900	77300	101600	36100	318
2.0	7090	1.1	698		**3/V 06 L3**		**BN90LB4**		28200	32200	64300	74200	27100	306
2.1	6630	1.4	661		**3/V 06 L3**		**BN90LB4**		28000	31900	63800	73700	26600	306
2.1	6030	2.4	655		**3/V 07 L3**		**BN90LB4**		33500	41900	75500	99300	34100	318
2.4	5710	1.5	569		**3/V 06 L3**		**BN90LB4**		27400	31200	62500	72100	25300	306
2.5	6430	1.1	555			**3/A 06L2**	**BN90LB4**		27300	31100	62200	71800	25100	307
2.6	5290	1.4	527		**3/V 06 L3**		**BN90LB4**		27100	30900	61800	71300	24700	306
2.7	5090	2.7	507		**3/V 07 L3**		**BN90LB4**		32300	40400	72800	95700	31400	318
2.8	5850	1.2	505			**3/A 06L2**	**BN90LB4**		26900	30700	61400	70900	24400	307
3.0	4690	1.0	462		**3/V 05 L3**		**BN90LB4**		22300	25500	43100	51000	16200	294
3.0	4620	2.7	460		**3/V 07 L3**		**BN90LB4**		31900	39900	71800	94400	30400	318
3.2	5040	1.5	435			**3/A 06L2**	**BN90LB4**		26400	30100	60100	69400	23200	307
3.2	5080	1.8	439			**3/A 07L2**	**BN90LB4**		31700	39600	71300	93800	29900	319
3.3	4340	2.0	427		**3/V 06 L3**		**BN90LB4**		26300	30000	59900	69200	23000	306
3.4	4690	1.9	405			**3/A 07L2**	**BN90LB4**		31300	39100	70500	92700	29100	319
3.5	4020	0.9	396		**3/V 05 L3**		**BN90LB4**		21900	25000	42100	50000	15400	294
3.5	4010	1.9	395		**3/V 06 L3**		**BN90LB4**		26000	29600	59300	68400	22400	306
3.6	4490	1.3	388			**3/A 06L2**	**BN90LB4**		25900	29600	59100	68300	22300	307
3.6	3670	1.0	384		**3/V 04 L3**		**BN90LB4**		21800	24900	41900	49700	15200	282
3.6	4010	2.2	386		**3/V 07 L3**		**BN90LB4**		31100	38900	70000	92100	28600	318
3.7	4400	1.4	380			**3/A 06L2**	**BN90LB4**		25900	29500	59000	68100	22200	307
4.1	3950	2.9	341			**3/A 07L2**	**BN90LB4**		30600	38200	68800	90400	27500	319

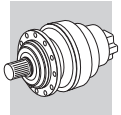

P_1 = 1.85 kW

n_2 min^{-1}	M_{n2} Nm	f_S	i	Pt kW					Rn_2 [N] MC/PC	MZ/PZ	HC	HZ	FZ	
4.2	3890	0.9	329			**3/A 05L2**	**BN90LB4**		21300	24300	41000	48600	14500	295
4.3	3720	1.8	321			**3/A 06L2**	**BN90LB4**		25200	28800	57500	66400	20900	307
4.9	3270	2.7	282			**3/A 07L2**	**BN90LB4**		30000	37500	67500	88800	25800	319
5.0	3310	1.1	280			**3/A 05L2**	**BN90LB4**		21000	24000	40500	48000	13700	295
5.0	3200	2.4	276			**3/A 06L2**	**BN90LB4**		25000	28500	57000	65800	19900	307
5.2	3090	1.8	267			**3/A 06L2**	**BN90LB4**		25000	28500	57000	65800	19700	307
5.6	2960	1.2	250			**3/A 04 L2**	**BN90LB4**		21000	24000	40500	48000	13200	283
5.8	2850	1.5	241			**3/A 05L2**	**BN90LB4**		21000	24000	40500	48000	13000	295
6.2	2670	1.3	226			**3/A 04 L2**	**BN90LB4**		21000	24000	40500	48000	12800	283
6.3	2560	2.5	221			**3/A 06L2**	**BN90LB4**		25000	28500	57000	65800	18500	307
6.6	2510	1.2	212			**3/A 05L2**	**BN90LB4**		21000	24000	40500	48000	12500	295
6.8	2420	1.4	205			**3/A 04 L2**	**BN90LB4**		21000	24000	40500	48000	12400	283
7.0	2290	2.4	198			**3/A 06L2**	**BN90LB4**		25000	28500	57000	65800	17800	307
7.9	2070	1.7	175			**3/A 05L2**	**BN90LB4**		21000	24000	40500	48000	11700	295
8.0	2060	1.4	174			**3/A 04 L2**	**BN90LB4**		21000	24000	40500	48000	11700	283
8.6	1920	1.5	162			**3/A 04 L2**	**BN90LB4**		21000	24000	40500	48000	11400	283
9.3	1760	1.4	149			**3/A 04 L2**	**BN90LB4**		21000	24000	40400	47900	11100	283
9.9	1670	2.2	141			**3/A 05L2**	**BN90LB4**		20600	23500	39700	47100	10900	295
10.8	1530	1.8	129			**3/A 04 L2**	**BN90LB4**		20000	22800	38700	45900	10600	283
11.5	1430	2.5	121			**3/A 05L2**	**BN90LB4**		19600	22300	38000	45000	10400	295
11.9	1380	1.7	117			**3/A 04 L2**	**BN90LB4**		19300	22100	37600	44500	10300	283
13.4	1230	2.5	104			**3/A 05L2**	**BN90LB4**		18600	21200	36200	42900	9840	295
13.6	1210	1.0	102			**3/A 01 L2**	**BN90LB4**		5710	5710	19100	20900	3260	261
13.6	1210	2.1	102			**3/A 04 L2**	**BN90LB4**		18500	21100	36100	42700	9790	283
14.3	1150	1.5	96.9			**3/A 03 L2**	**BN90LB4**		18200	20700	35500	42100	9630	271
15.3	1070	2.2	90.7			**3/A 04 L2**	**BN90LB4**		17800	20300	34800	41300	9420	283
15.7	1050	1.6	88.5			**3/A 03 L2**	**BN90LB4**		17600	20100	34600	41000	9340	271
17.0	970	2.5	81.7			**3/A 04 L2**	**BN90LB4**		17200	19600	33800	40000	9100	283
17.1	960	1.4	81.3			**3/A 01 L2**	**BN90LB4**		5300	5300	17900	19600	3030	261
18.7	880	1.3	74.2			**3/A 01 L2**	**BN90LB4**		5140	5140	17400	19000	2940	261
19.0	870	2.1	73.2			**3/A 03 L2**	**BN90LB4**		16500	18900	32700	38700	8770	271
22.1	740	2.1	62.9			**3/A 03 L2**	**BN90LB4**		15700	18000	31200	37000	8340	271
23.4	700	1.8	59.4			**3/A 01 L2**	**BN90LB4**		4770	4770	16300	17800	2730	261
25.6	640	1.8	54.2			**3/A 01 L2**	**BN90LB4**		4630	4630	15800	17300	2650	261
26.5	620	2.7	52.5			**3/A 03 L2**	**BN90LB4**		14800	16900	29600	35000	7850	271
28.3	580	1.4	49.1			**3/A 01 L2**	**BN90LB4**		4480	4480	15400	16800	2560	261
32	520	1.8	43.9			**3/A 01 L2**	**BN90LB4**		4320	4320	14900	16300	2470	261
33	490	1.3	41.5			**3/A 00 L2**	**BN90LB4**		4240	4240	14600	17000	2420	251
35	470	1.2	39.6			**3/A 00 L2**	**BN90LB4**		4170	4170	14400	16800	2380	251
35	475	1.8	40.1			**3/A 01 L2**	**BN90LB4**		4190	4190	14500	15800	2390	261
39	425	1.8	35.8			**3/A 01 L2**	**BN90LB4**		4030	4030	14000	15300	2300	261
44	375	1.7	31.7			**3/A 00 L2**	**BN90LB4**		3870	3870	13500	15700	2210	251
59	275	2.1	23.4			**3/A 00 L2**	**BN90LB4**		3500	3500	12300	14300	2000	251
73	225	2.1	19.1			**3/A 00 L2**	**BN90LB4**		3270	3270	11600	13500	1870	251

P_1 = 2.2 kW

n_2 min^{-1}	M_{n2} Nm	f_S	i	Pt kW					Rn_2 [N] MC/PC	MZ/PZ	HC	HZ	FZ	
0.27	56900	1.6	5234	—	**3/V 15 ML4**	**—**	**BN100LA4**	**—**	—	—	198600	238200	90000	391
0.28	50800	1.0	5046	—	**3/V 13 ML4**	**—**	**BN100LA4**	**—**	—	—	192000	231000	80000	367
0.28	51900	1.6	4959	—	**3/V 14 ML4**	**—**	**BN100LA4**	**—**	—	—	197100	236300	90000	379
0.28	53900	1.9	4950	—	**3/V 15 ML4**	**—**	**BN100LA4**	**—**	—	—	197000	236300	90000	391
0.28	53900	2.2	4950	—	**3/V 16 ML4**	**—**	**BN100LA4**	**—**	—	—	301500	338200	150000	403
0.31	47500	1.2	4536	—	**3/V 13 ML4**	**—**	**BN100LA4**	**—**	—	—	192000	231000	80000	367
0.32	46200	1.0	4410	—	**3/V 11 ML4**	**—**	**BN100LA4**	**—**	—	—	143900	146800	65000	355
0.33	45200	1.8	4312	—	**3/V 14 ML4**	**—**	**BN100LA4**	**—**	—	—	193200	231700	90000	379
0.34	41300	1.2	4106	—	**3/V 11 ML4**	**—**	**BN100LA4**	**—**	—	—	142400	145300	65000	355
0.34	45400	2.2	4171	—	**3/V 15 ML4**	**—**	**BN100LA4**	**—**	—	—	192300	230600	90000	391
0.34	45400	3.0	4171	—	**3/V 16 ML4**	**—**	**BN100LA4**	**—**	—	—	294200	330000	150000	403
0.35	42400	1.4	4046	—	**3/V 13 ML4**	**—**	**BN100LA4**	**—**	—	—	192000	231000	80000	367
0.35	45100	1.6	3993	—	**3/V 14 ML4**	**—**	**BN100LA4**	**—**	—	—	191100	229100	90000	379

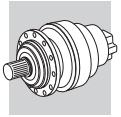

A

P_1 = 2.2 kW

n_2 min^{-1}	M_{n2} Nm	f_S	i	Pt kW					Rn_2 [N] MC/PC	MZ/PZ	HC	HZ	FZ	
0.40	35800	1.2	3557	—	**3/V 11 ML4**	**—**	**BN100LA4**	**—**	—	—	139500	142400	65000	355
0.40	40200	1.4	3515	—	**3/V 13 ML4**	**—**	**BN100LA4**	**—**	—	—	192000	231000	80000	367
0.43	37300	1.5	3263	—	**3/V 13 ML4**	**—**	**BN100LA4**	**—**	—	—	192000	231000	80000	367
0.44	36800	1.3	3222	—	**3/V 11 ML4**	**—**	**BN100LA4**	**—**	—	—	137600	140400	65000	355
0.44	35900	2.2	3182	—	**3/V 14 ML4**	**—**	**BN100LA4**	**—**	—	—	185000	221800	90000	379
0.46	34600	1.4	3063	—	**3/V 11 ML4**	**—**	**BN100LA4**	**—**	—	—	136600	139400	65000	355
0.51	29000	2.0	2773	—	**3/V 13 ML4**	**—**	**BN100LA4**	**—**	—	—	192000	228600	80000	367
0.51	30300	2.7	2782	—	**3/V 14 ML4**	**—**	**BN100LA4**	**—**	—	—	181400	217600	90000	379
0.53	30400	1.6	2663	—	**3/V 11 ML4**	**—**	**BN100LA4**	**—**	—	—	133900	136600	65000	355
0.57	28400	1.0	2455	—	**3/V 10 ML4**	**—**	**BN100LA4**	**—**	—	—	105300	133500	65000	343
0.58	25200	1.6	2430	—	**3/V 13 ML3**	**—**	**BN100LA4**	**—**	—	—	191500	224400	80000	366
0.61	24200	1.5	2329	—	**3/V 11 ML3**	**—**	**BN100LA4**	**—**	—	—	131300	134000	65000	354
0.61	24000	2.6	2318	—	**3/V 14 ML3**	**—**	**BN100LA4**	**—**	—	—	176800	212000	90000	378
0.65	24600	1.1	2156	—	**3/V 10 ML4**	**—**	**BN100LA4**	**—**	—	—	103400	131100	65000	343
0.70	23000	1.3	2016	—	**3/V 10 ML4**	**—**	**BN100LA4**	**—**	—	—	102400	129800	65000	343
0.70	20900	2.7	2019	—	**3/V 13 ML3**	**—**	**BN100LA4**	**—**	—	—	186500	218500	80000	366
0.72	20400	2.0	1963	—	**3/V 11 ML3**	**—**	**BN100LA4**	**—**	—	—	128200	130800	65000	354
0.76	21200	1.3	1855	—	**3/V 10 ML4**	**—**	**BN100LA4**	**—**	—	—	101200	128300	65000	343
0.79	18100	1.2	1792	—	**3/V 09 L3**	**—**	**BN100LA4**	**—**	—	—	89100	114600	36000	330
0.86	17400	2.4	1636	—	**3/V 11 ML3**	**—**	**BN100LA4**	**—**	—	—	124900	127400	65000	354
0.87	18700	1.5	1617	—	**3/V 10 ML4**	**—**	**BN100LA4**	**—**	—	—	99200	125800	65000	343
0.94	16200	1.1	1497	—	**3/V 09 L3**	**—**	**BN100LA4**	**—**	—	—	86800	111700	36000	330
1.0	15200	1.3	1411	—	**3/V 10 ML3**	**—**	**BN100LA4**	**—**	—	—	97300	123400	63700	342
1.1	13400	1.1	1288	—	**3/V 07 L3**	**—**	**BN100LA4**	**—**	36900	46200	83100	109300	42800	318
1.1	13900	1.5	1288	—	**3/V 09 L3**	**—**	**BN100LA4**	**—**	—	—	85000	109300	34200	330
1.1	13200	1.5	1227	—	**3/V 10 ML3**	**—**	**BN100LA4**	**—**	—	—	95400	120900	60800	342
1.1	13600	2.4	1274	—	**3/V 11 ML3**	**—**	**BN100LA4**	**—**	—	—	120500	123000	61600	354
1.2	13000	1.2	1159	—	**3/V 09 L3**	**—**	**BN100LA4**	**—**	—	—	83700	107700	33000	330
1.3	12100	2.4	1120	—	**3/V 10 ML3**	**—**	**BN100LA4**	**—**	—	—	94200	119400	59000	342
1.4	10800	1.3	1015	—	**3/V 07 L3**	**—**	**BN100LA4**	**—**	35700	44600	80300	105700	39500	318
1.4	10800	1.7	1004	—	**3/V 09 L3**	**—**	**BN100LA4**	**—**	—	—	82000	105500	31500	330
1.4	10800	2.9	1004	—	**3/V 10 ML3**	**—**	**BN100LA4**	**—**	—	—	92700	117500	56900	342
1.5	9930	1.2	920	—	**3/V 07 L3**	**—**	**BN100LA4**	**—**	35200	44000	79200	104200	38200	318
1.5	10300	1.9	920	—	**3/V 10 ML3**	**—**	**BN100LA4**	**—**	—	—	91500	116100	55200	342
1.7	9420	2.1	840	—	**3/V 09 L3**	**—**	**BN100LA4**	**—**	—	—	79900	102900	29700	330
1.8	8430	0.9	791	—	**3/V 06 L3**	**—**	**BN100LA4**	**—**	28700	32700	65500	75600	28300	306
1.8	9100	1.1	773	—	**3/V 07 L3**	**—**	**BN100LA4**	**—**	34300	42900	77300	101600	36100	318
1.8	8640	2.5	800	—	**3/V 09 L3**	**—**	**BN100LA4**	**—**	—	—	79400	102200	29200	330
1.9	8210	1.7	761	—	**3/V 07 L3**	**—**	**BN100LA4**	**—**	34300	42800	77100	101400	35900	318
1.9	8540	1.7	761	—	**3/V 09 L3**	**—**	**BN100LA4**	**—**	—	—	78800	101400	28700	330
2.0	8320	0.9	698	—	**3/V 06 L3**	**—**	**BN100LA4**	**—**	28200	32200	64300	74200	27100	306
2.1	7780	1.2	661	—	**3/V 06 L3**	**—**	**BN100LA4**	**—**	28000	31900	63800	73700	26600	306
2.2	7070	2.0	655	—	**3/V 07 L3**	**—**	**BN100LA4**	**—**	33500	41900	75500	99300	34100	318
2.2	7350	2.4	655	—	**3/V 09 L3**	**—**	**BN100LA4**	**—**	—	—	77100	99300	27300	330
2.5	7540	1.0	555	—	**—**	**3/A 06 L2**	**BN100LA4**	**—**	27300	31100	62200	71800	25100	307
2.5	6700	1.3	569	—	**3/V 06 L3**	**—**	**BN100LA4**	**—**	27400	31200	62500	72100	25300	306
2.7	6210	1.2	527	—	**3/V 06 L3**	**—**	**BN100LA4**	**—**	27100	30900	61800	71300	24700	306
2.8	6860	1.0	505	—	**—**	**3/A 06 L2**	**BN100LA4**	**—**	26900	30700	61400	70900	24400	307
2.8	5970	2.3	507	—	**3/V 07 L3**	**—**	**BN100LA4**	**—**	32300	40400	72800	95700	31400	318
3.1	5420	2.3	460	—	**3/V 07 L3**	**—**	**BN100LA4**	**—**	31900	39900	71800	94400	30400	318
3.2	5910	1.3	435	—	**—**	**3/A 06 L2**	**BN100LA4**	**—**	26400	30100	60100	69400	23200	307
3.2	5960	1.5	439	—	**—**	**3/A 07 L2**	**BN100LA4**	**—**	31700	39600	71300	93800	29900	319
3.3	5090	1.7	427	—	**3/V 06 L3**	**—**	**BN100LA4**	**—**	26300	30000	59900	69200	23000	306
3.5	5500	1.7	405	—	**—**	**3/A 07 L2**	**BN100LA4**	**—**	31300	39100	70500	92700	29100	319
3.6	5270	1.1	388	—	**—**	**3/A 06 L2**	**BN100LA4**	**—**	25900	29600	59100	68300	22300	307
3.6	4710	1.6	395	—	**3/V 06 L3**	**—**	**BN100LA4**	**—**	26000	29600	59300	68400	22400	306
3.7	5160	1.2	380	—	**—**	**3/A 06 L2**	**BN100LA4**	**—**	25900	29500	59000	68100	22200	307
3.7	4710	1.9	386	—	**3/V 07 L3**	**—**	**BN100LA4**	**—**	31100	38900	70000	92100	28600	318
4.1	4630	2.5	341	—	**—**	**3/A 07 L2**	**BN100LA4**	**—**	30600	38200	68800	90400	27500	319
4.4	4360	1.5	321	—	**—**	**3/A 06 L2**	**BN100LA4**	**—**	25200	28800	57500	66400	20900	307
5.0	3880	0.9	280	—	**—**	**3/A 05 L2**	**BN100LA4**	**—**	21000	24000	40500	48000	13700	295
5.0	3830	2.3	282	—	**—**	**3/A 07 L2**	**BN100LA4**	**—**	30000	37500	67500	88800	25800	319
5.1	3750	2.1	276	—	**—**	**3/A 06 L2**	**BN100LA4**	**—**	25000	28500	57000	65800	19900	307
5.3	3630	1.5	267	—	**—**	**3/A 06 L2**	**BN100LA4**	**—**	25000	28500	57000	65800	19700	307
5.6	3470	1.0	250	—	**—**	**3/A 04 L2**	**BN100LA4**	**—**	21000	24000	40500	48000	13200	283

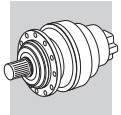

A

P_1 = 2.2 kW

n_2 min^{-1}	M_{n2} Nm	f_S	i	Pt kW					Rn_2 [N] MC/PC	MZ/PZ	HC	HZ	FZ	
5.9	3340	1.3	241	—	—	**3/A 05 L2**	**BN100LA4**	—	21000	24000	40500	48000	13000	295
5.9	3270	2.7	241	—	—	**3/A 07 L2**	**BN100LA4**	—	30000	37500	67500	88800	24500	319
6.2	3140	1.1	226	—	—	**3/A 04 L2**	**BN100LA4**	—	21000	24000	40500	48000	12800	283
6.3	3030	3.0	223	—	—	**3/A 07 L2**	**BN100LA4**	—	30000	37500	67500	88800	23800	319
6.4	3000	2.2	221	—	—	**3/A 06 L2**	**BN100LA4**	—	25000	28500	57000	65800	18500	307
6.7	2940	1.1	212	—	—	**3/A 05 L2**	**BN100LA4**	—	21000	24000	40500	48000	12500	295
6.9	2840	1.2	205	—	—	**3/A 04 L2**	**BN100LA4**	—	21000	24000	40500	48000	12400	283
7.1	2690	2.0	198	—	—	**3/A 06 L2**	**BN100LA4**	—	25000	28500	57000	65800	17800	307
8.1	2410	1.2	174	—	—	**3/A 04 L2**	**BN100LA4**	—	21000	24000	40500	48000	11700	283
8.1	2430	1.5	175	—	—	**3/A 05 L2**	**BN100LA4**	—	21000	24000	40500	48000	11700	295
8.6	2230	2.9	164	—	—	**3/A 06 L2**	**BN100LA4**	—	25000	28500	57000	65800	16700	307
8.7	2250	1.3	162	—	—	**3/A 04 L2**	**BN100LA4**	—	21000	24000	40500	48000	11400	283
8.7	2250	1.3	162	—	—	**3/A 05 L2**	**BN100LA4**	—	21000	24000	40500	48000	11400	295
9.5	2070	1.2	149	—	—	**3/A 04 L2**	**BN100LA4**	—	21000	24000	40400	47900	11100	283
10.0	1960	1.8	141	—	—	**3/A 05 L2**	**BN100LA4**	—	20600	23500	39700	47100	10900	295
10.9	1790	1.5	129	—	—	**3/A 04 L2**	**BN100LA4**	—	20000	22800	38700	45900	10600	283
11.7	1680	2.1	121	—	—	**3/A 05 L2**	**BN100LA4**	—	19600	22300	38000	45000	10400	295
12.1	1620	1.5	117	—	—	**3/A 04 L2**	**BN100LA4**	—	19300	22100	37600	44500	10300	283
13.6	1440	2.1	104	—	—	**3/A 05 L2**	**BN100LA4**	—	18600	21200	36200	42900	9840	295
13.8	1420	1.8	102	—	—	**3/A 04 L2**	**BN100LA4**	—	18500	21100	36100	42700	9790	283
14.6	1340	1.3	96.9	—	—	**3/A 03 L2**	**BN100LA4**	—	18200	20700	35500	42100	9630	271
15.5	1260	1.9	90.7	—	—	**3/A 04 L2**	**BN100LA4**	—	17800	20300	34800	41300	9420	283
15.9	1230	1.3	88.5	—	—	**3/A 03 L2**	**BN100LA4**	—	17600	20100	34600	41000	9340	271
16.5	1190	3.0	85.6	—	—	**3/A 05 L2**	**BN100LA4**	—	17400	19900	34200	40600	9240	295
17.3	1130	1.2	81.3	—	—	**3/A 01 L2**	**BN100LA4**	—	5300	5300	17900	19600	3030	261
17.3	1130	2.1	81.7	—	—	**3/A 04 L2**	**BN100LA4**	—	17200	19600	33800	40000	9100	283
18.6	1050	2.9	75.8	—	—	**3/A 05 L2**	**BN100LA4**	—	16700	19100	33000	39100	8870	295
19.0	1030	1.1	74.2	—	—	**3/A 01 L2**	**BN100LA4**	—	5140	5140	17400	19000	2940	261
19.3	1020	1.8	73.2	—	—	**3/A 03 L2**	**BN100LA4**	—	16500	18900	32700	38700	8770	271
20.6	950	2.6	68.4	—	—	**3/A 04 L2**	**BN100LA4**	—	16200	18500	32000	37900	8580	283
22.4	870	1.8	62.9	—	—	**3/A 03 L2**	**BN100LA4**	—	15700	18000	31200	37000	8340	271
23.7	820	1.5	59.4	—	—	**3/A 01 L2**	**BN100LA4**	—	4770	4770	16300	17800	2730	261
26.0	750	1.6	54.2	—	—	**3/A 01 L2**	**BN100LA4**	—	4630	4630	15800	17300	2650	261
26.9	730	2.3	52.5	—	—	**3/A 03 L2**	**BN100LA4**	—	14800	16900	29600	35000	7850	271
28.7	680	1.2	49.1	—	—	**3/A 01 L2**	**BN100LA4**	—	4480	4480	15400	16800	2560	261
32	610	1.5	43.9	—	—	**3/A 01 L2**	**BN100LA4**	—	4320	4320	14900	16300	2470	261
32	600	3.0	43.4	—	—	**3/A 03 L2**	**BN100LA4**	—	13900	15900	27900	33100	7370	271
34	580	1.1	41.5	—	—	**3/A 00 L2**	**BN100LA4**	—	4240	4240	14600	17000	2420	251
35	560	1.6	40.1	—	—	**3/A 01 L2**	**BN100LA4**	—	4190	4190	14500	15800	2390	261
35	560	2.9	40.5	—	—	**3/A 03 L2**	**BN100LA4**	—	13600	15500	27300	32400	7200	271
36	550	1.0	39.6	—	—	**3/A 00 L2**	**BN100LA4**	—	4170	4170	14400	16800	2380	251
39	495	1.5	35.8	—	—	**3/A 01 L2**	**BN100LA4**	—	4030	4030	14000	15300	2300	261
44	440	1.5	31.7	—	—	**3/A 00 L2**	**BN100LA4**	—	3870	3870	13500	15700	2210	251
45	435	2.7	31.2	—	—	**3/A 01 L2**	**BN100LA4**	—	3850	3850	13400	14700	2200	261
60	325	1.8	23.4	—	—	**3/A 00 L2**	**BN100LA4**	—	3500	3500	12300	14300	2000	251
61	320	2.7	23.0	—	—	**3/A 01 L2**	**BN100LA4**	—	3480	3480	12300	13400	1990	261
74	265	1.8	19.1	—	—	**3/A 00 L2**	**BN100LA4**	—	3270	3270	11600	13500	1870	251
75	260	2.7	18.8	—	—	**3/A 01 L2**	**BN100LA4**	—	3250	3250	11500	12600	1860	261

P_1 = 3 kW

n_2 min^{-1}	M_{n2} Nm	f_S	i	Pt kW					Rn_2 [N] MC/PC	MZ/PZ	HC	HZ	FZ	
0.27	76400	1.2	5234	—	**3/V 15 ML4**	—	**BN100LB4**	—	—	—	198600	238200	90000	391
0.28	69700	1.2	4959	—	**3/V 14 ML4**	—	**BN100LB4**	—	—	—	197100	236300	90000	379
0.28	72300	1.4	4950	—	**3/V 15 ML4**	—	**BN100LB4**	—	—	—	197000	236300	90000	391
0.28	72300	1.6	4950	—	**3/V 16 ML4**	—	**BN100LB4**	—	—	—	301500	338200	150000	403
0.33	60600	1.3	4312	—	**3/V 14 ML4**	—	**BN100LB4**	—	—	—	193200	231700	90000	379
0.34	60900	1.7	4171	—	**3/V 15 ML4**	—	**BN100LB4**	—	—	—	192300	230600	90000	391
0.34	60900	2.2	4171	—	**3/V 16 ML4**	—	**BN100LB4**	—	—	—	294200	330000	150000	403
0.35	56900	1.1	4046	—	**3/V 13 ML4**	—	**BN100LB4**	—	—	—	192000	231000	80000	367
0.35	60500	1.2	3993	—	**3/V 14 ML4**	—	**BN100LB4**	—	—	—	191100	229100	90000	379

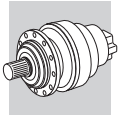

A

P_1 = 3 kW

n_2 min^{-1}	M_{n2} Nm	f_S	i	Pt kW					Rn_2 [N] MC/PC	MZ/PZ	HC	HZ	FZ	
0.40	53900	1.1	3515	—	**3/V 13 ML4**	**—**	**BN100LB4**	**—**	—	—	192000	231000	80000	367
0.40	51300	2.6	3514	—	**3/V 16 ML4**	**—**	**BN100LB4**	**—**	—	—	287100	322100	150000	403
0.43	50000	1.1	3263	—	**3/V 13 ML4**	**—**	**BN100LB4**	**—**	—	—	192000	231000	80000	367
0.44	49400	1.0	3222	—	**3/V 11 ML4**	**—**	**BN100LB4**	**—**	—	—	137600	140400	65000	355
0.44	48200	1.6	3182	—	**3/V 14 ML4**	**—**	**BN100LB4**	**—**	—	—	185000	221800	90000	379
0.46	46400	1.0	3063	—	**3/V 11 ML4**	**—**	**BN100LB4**	**—**	—	—	136600	139400	65000	355
0.49	42100	2.9	2880	—	**3/V 16 ML4**	**—**	**BN100LB4**	**—**	—	—	279000	313000	150000	403
0.51	39000	1.5	2773	—	**3/V 13 ML4**	**—**	**BN100LB4**	**—**	—	—	192000	228600	80000	367
0.51	40600	2.0	2782	—	**3/V 14 ML4**	**—**	**BN100LB4**	**—**	—	—	181400	217600	90000	379
0.53	40800	1.2	2663	—	**3/V 11 ML4**	**—**	**BN100LB4**	**—**	—	—	133900	136600	65000	355
0.53	39100	2.9	2678	—	**3/V 16 ML4**	**—**	**BN100LB4**	**—**	—	—	276200	309800	150000	403
0.56	35200	2.3	2504	—	**3/V 14 ML4**	**—**	**BN100LB4**	**—**	—	—	178700	214300	90000	379
0.58	33800	1.2	2430	—	**3/V 13 ML3**	**—**	**BN100LB4**	**—**	—	—	191500	224400	80000	366
0.61	32400	1.1	2329	—	**3/V 11 ML3**	**—**	**BN100LB4**	**—**	—	—	131300	134000	65000	354
0.61	32300	2.0	2318	—	**3/V 14 ML3**	**—**	**BN100LB4**	**—**	—	—	176800	212000	90000	378
0.70	30900	1.0	2016	—	**3/V 10 ML4**	**—**	**BN100LB4**	**—**	—	—	102400	129800	65000	343
0.70	28100	2.0	2019	—	**3/V 13 ML3**	**—**	**BN100LB4**	**—**	—	—	186500	218500	80000	366
0.71	27800	2.6	1994	—	**3/V 14 ML3**	**—**	**BN100LB4**	**—**	—	—	173000	207500	90000	378
0.72	27300	1.5	1963	—	**3/V 11 ML3**	**—**	**BN100LB4**	**—**	—	—	128200	130800	65000	354
0.76	28400	1.0	1855	—	**3/V 10 ML4**	**—**	**BN100LB4**	**—**	—	—	101200	128300	65000	343
0.79	24300	0.9	1792	—	**3/V 09 L3**	**—**	**BN100LB4**	**—**	—	—	89100	114600	36000	330
0.84	24100	2.4	1682	—	**3/V 13 ML3**	**—**	**BN100LB4**	**—**	—	—	181700	212900	80000	366
0.86	23400	1.8	1636	—	**3/V 11 ML3**	**—**	**BN100LB4**	**—**	—	—	124900	127400	65000	354
0.87	25100	1.1	1617	—	**3/V 10 ML4**	**—**	**BN100LB4**	**—**	—	—	99200	125800	65000	343
0.89	22100	2.6	1589	—	**3/V 14 ML3**	**—**	**BN100LB4**	**—**	—	—	167500	200900	90000	378
0.99	20300	2.8	1418	—	**3/V 13 ML3**	**—**	**BN100LB4**	**—**	—	—	177300	207700	78500	366
1.0	20400	1.0	1411	—	**3/V 10 ML3**	**—**	**BN100LB4**	**—**	—	—	97300	123400	63700	342
1.0	19700	2.4	1378	—	**3/V 11 ML3**	**—**	**BN100LB4**	**—**	—	—	121800	124300	63200	354
1.1	18700	1.2	1288	—	**3/V 09 L3**	**—**	**BN100LB4**	**—**	—	—	85000	109300	34200	330
1.1	17800	1.1	1227	—	**3/V 10 ML3**	**—**	**BN100LB4**	**—**	—	—	95400	120900	60800	342
1.1	18200	1.8	1274	—	**3/V 11 ML3**	**—**	**BN100LB4**	**—**	—	—	120500	123000	61600	354
1.1	18500	2.7	1291	—	**3/V 13 ML3**	**—**	**BN100LB4**	**—**	—	—	174900	205000	76100	366
1.1	18600	2.6	1339	—	**3/V 14 ML3**	**—**	**BN100LB4**	**—**	—	—	163400	196000	86700	378
1.2	17400	0.9	1159	—	**3/V 09 L3**	**—**	**BN100LB4**	**—**	—	—	83700	107700	33000	330
1.3	16200	1.8	1120	—	**3/V 10 ML3**	**—**	**BN100LB4**	**—**	—	—	94200	119400	59000	342
1.4	14500	1.0	1015	—	**3/V 07 L3**	**—**	**BN100LB4**	**—**	35700	44600	80300	105700	39500	318
1.4	14500	1.2	1004	—	**3/V 09 L3**	**—**	**BN100LB4**	**—**	—	—	82000	105500	31500	330
1.4	14500	2.2	1004	—	**3/V 10 ML3**	**—**	**BN100LB4**	**—**	—	—	92700	117500	56900	342
1.4	14000	2.6	1004	—	**3/V 11 ML3**	**—**	**BN100LB4**	**—**	—	—	116500	118800	56900	354
1.5	13300	0.9	920	—	**3/V 07 L3**	**—**	**BN100LB4**	**—**	35200	44000	79200	104200	38200	318
1.5	13900	1.4	920	—	**3/V 10 ML3**	**—**	**BN100LB4**	**—**	—	—	91500	116100	55200	342
1.7	12600	1.6	840	—	**3/V 09 L3**	**—**	**BN100LB4**	**—**	—	—	79900	102900	29700	330
1.8	11600	1.8	800	—	**3/V 09 L3**	**—**	**BN100LB4**	**—**	—	—	79400	102200	29200	330
1.9	11000	1.3	761	—	**3/V 07 L3**	**—**	**BN100LB4**	**—**	34300	42800	77100	101400	35900	318
1.9	11500	1.3	761	—	**3/V 09 L3**	**—**	**BN100LB4**	**—**	—	—	78800	101400	28700	330
2.2	9490	1.5	655	—	**3/V 07 L3**	**—**	**BN100LB4**	**—**	33500	41900	75500	99300	34100	318
2.2	9860	1.8	655	—	**3/V 09 L3**	**—**	**BN100LB4**	**—**	—	—	77100	99300	27300	330
2.5	8990	1.0	569	—	**3/V 06 L3**	**—**	**BN100LB4**	**—**	27400	31200	62500	72100	25300	306
2.7	8330	0.9	527	—	**3/V 06 L3**	**—**	**BN100LB4**	**—**	27100	30900	61800	71300	24700	306
2.8	8010	1.7	507	—	**3/V 07 L3**	**—**	**BN100LB4**	**—**	32300	40400	72800	95700	31400	318
3.1	7270	1.7	460	—	**3/V 07 L3**	**—**	**BN100LB4**	**—**	31900	39900	71800	94400	30400	318
3.2	7930	1.0	435	—	**—**	**3/A 06 L2**	**BN100LB4**	**—**	26400	30100	60100	69400	23200	307
3.2	8010	1.1	439	—	**—**	**3/A 07 L2**	**BN100LB4**	**—**	31700	39600	71300	93800	29900	319
3.2	6650	2.7	442	—	**3/V 09 L3**	**—**	**BN100LB4**	**—**	—	—	72900	93800	24000	330
3.3	6830	1.3	427	—	**3/V 06 L3**	**—**	**BN100LB4**	**—**	26300	30000	59900	69200	23000	306
3.5	7390	1.2	405	—	**—**	**3/A 07 L2**	**BN100LB4**	**—**	31300	39100	70500	92700	29100	319
3.6	6320	1.2	395	—	**3/V 06 L3**	**—**	**BN100LB4**	**—**	26000	29600	59300	68400	22400	306
3.7	6320	1.4	386	—	**3/V 07 L3**	**—**	**BN100LB4**	**—**	31100	38900	70000	92100	28600	318
3.8	5570	2.3	370	—	**3/V 09 L3**	**—**	**BN100LB4**	**—**	—	—	71100	91500	22600	330
4.1	6220	1.8	341	—	**—**	**3/A 07 L2**	**BN100LB4**	**—**	30600	38200	68800	90400	27500	319
4.4	5850	1.1	321	—	**—**	**3/A 06 L2**	**BN100LB4**	**—**	25200	28800	57500	66400	20900	307
5.0	5140	1.7	282	—	**—**	**3/A 07 L2**	**BN100LB4**	**—**	30000	37500	67500	88800	25800	319
5.1	5030	1.5	276	—	**—**	**3/A 06 L2**	**BN100LB4**	**—**	25000	28500	57000	65800	19900	307
5.3	4870	1.1	267	—	**—**	**3/A 06 L2**	**BN100LB4**	**—**	25000	28500	57000	65800	19700	307
5.9	4490	1.0	241	—	**—**	**3/A 05 L2**	**BN100LB4**	**—**	21000	24000	40500	48000	13000	295

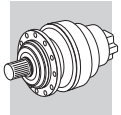

P_1 = 3 kW

n_2 min^{-1}	M_{n2} Nm	f_S	i	Pt kW					Rn_2 [N] MC/PC	MZ/PZ	HC	HZ	FZ	
5.9	4390	2.0	241	—	—	**3/A 07 L2**	**BN100LB4**	—	30000	37500	67500	88800	24500	319
6.3	4070	2.2	223	—	—	**3/A 07 L2**	**BN100LB4**	—	30000	37500	67500	88800	23800	319
6.4	4030	1.6	221	—	—	**3/A 06 L2**	**BN100LB4**	—	25000	28500	57000	65800	18500	307
6.9	3820	0.9	205	—	—	**3/A 04 L2**	**BN100LB4**	—	21000	24000	40500	48000	12400	283
7.1	3610	1.5	198	—	—	**3/A 06 L2**	**BN100LB4**	—	25000	28500	57000	65800	17800	307
7.1	3610	2.4	198	—	—	**3/A 07 L2**	**BN100LB4**	—	30000	37500	67500	88800	22900	319
7.4	3460	2.2	190	—	—	**3/A 06 L2**	**BN100LB4**	—	25000	28500	57000	65800	17600	307
8.1	3240	0.9	174	—	—	**3/A 04 L2**	**BN100LB4**	—	21000	24000	40500	48000	11700	283
8.1	3260	1.1	175	—	—	**3/A 05 L2**	**BN100LB4**	—	21000	24000	40500	48000	11700	295
8.6	2990	2.2	164	—	—	**3/A 06 L2**	**BN100LB4**	—	25000	28500	57000	65800	16700	307
8.7	3020	1.0	162	—	—	**3/A 04 L2**	**BN100LB4**	—	21000	24000	40500	48000	11400	283
8.7	3020	1.0	162	—	—	**3/A 05 L2**	**BN100LB4**	—	21000	24000	40500	48000	11400	295
10.0	2630	1.4	141	—	—	**3/A 05 L2**	**BN100LB4**	—	20600	23500	39700	47100	10900	295
10.9	2400	1.1	129	—	—	**3/A 04 L2**	**BN100LB4**	—	20000	22800	38700	45900	10600	283
11.3	2330	2.3	125	—	—	**3/A 06 L2**	**BN100LB4**	—	23500	26800	53900	62200	15300	307
11.7	2250	1.6	121	—	—	**3/A 05 L2**	**BN100LB4**	—	19600	22300	38000	45000	10400	295
12.1	2180	1.1	117	—	—	**3/A 04 L2**	**BN100LB4**	—	19300	22100	37600	44500	10300	283
13.6	1940	1.6	104	—	—	**3/A 05 L2**	**BN100LB4**	—	18600	21200	36200	42900	9840	295
13.8	1900	1.3	102	—	—	**3/A 04 L2**	**BN100LB4**	—	18500	21100	36100	42700	9790	283
14.3	1830	2.9	98.3	—	—	**3/A 06 L2**	**BN100LB4**	—	21700	24800	50200	58000	14100	307
14.6	1800	0.9	96.9	—	—	**3/A 03 L2**	**BN100LB4**	—	18200	20700	35500	42100	9630	271
15.5	1690	1.4	90.7	—	—	**3/A 04 L2**	**BN100LB4**	—	17800	20300	34800	41300	9420	283
15.9	1650	1.0	88.5	—	—	**3/A 03 L2**	**BN100LB4**	—	17600	20100	34600	41000	9340	271
16.5	1590	2.2	85.6	—	—	**3/A 05 L2**	**BN100LB4**	—	17400	19900	34200	40600	9240	295
17.3	1520	1.6	81.7	—	—	**3/A 04 L2**	**BN100LB4**	—	17200	19600	33800	40000	9100	283
18.6	1410	2.2	75.8	—	—	**3/A 05 L2**	**BN100LB4**	—	16700	19100	33000	39100	8870	295
19.3	1360	1.3	73.2	—	—	**3/A 03 L2**	**BN100LB4**	—	16500	18900	32700	38700	8770	271
19.4	1350	2.5	72.5	—	—	**3/A 05 L2**	**BN100LB4**	—	16500	18800	32600	38600	8740	295
20.6	1270	2.0	68.4	—	—	**3/A 04 L2**	**BN100LB4**	—	16200	18500	32000	37900	8580	283
22.4	1170	1.3	62.9	—	—	**3/A 03 L2**	**BN100LB4**	—	15700	18000	31200	37000	8340	271
22.5	1170	2.8	62.6	—	—	**3/A 05 L2**	**BN100LB4**	—	15700	17900	31200	36900	8330	295
22.6	1160	2.5	62.4	—	—	**3/A 04 L2**	**BN100LB4**	—	15700	17900	31100	36900	8320	283
23.7	1110	1.1	59.4	—	—	**3/A 01 L2**	**BN100LB4**	—	4770	4770	16300	17800	2730	261
25.9	1020	2.4	54.5	—	—	**3/A 04 L2**	**BN100LB4**	—	15000	17100	29900	35400	7950	283
26.0	1010	1.2	54.2	—	—	**3/A 01 L2**	**BN100LB4**	—	4630	4630	15800	17300	2650	261
26.9	980	1.7	52.5	—	—	**3/A 03 L2**	**BN100LB4**	—	14800	16900	29600	35000	7850	271
28.4	930	2.5	49.7	—	—	**3/A 04 L2**	**BN100LB4**	—	14500	16600	29100	34500	7710	283
28.7	910	0.9	49.1	—	—	**3/A 01 L2**	**BN100LB4**	—	4480	4480	15400	16800	2560	261
32	820	1.1	43.9	—	—	**3/A 01 L2**	**BN100LB4**	—	4320	4320	14900	16300	2470	261
32	810	2.2	43.4	—	—	**3/A 03 L2**	**BN100LB4**	—	13900	15900	27900	33100	7370	271
35	750	1.2	40.1	—	—	**3/A 01 L2**	**BN100LB4**	—	4190	4190	14500	15800	2390	261
35	750	2.2	40.5	—	—	**3/A 03 L2**	**BN100LB4**	—	13600	15500	27300	32400	7200	271
39	670	1.1	35.8	—	—	**3/A 01 L2**	**BN100LB4**	—	4030	4030	14000	15300	2300	261
42	620	2.9	33.5	—	—	**3/A 03 L2**	**BN100LB4**	—	12700	14600	25800	30600	6760	271
44	590	1.1	31.7	—	—	**3/A 00 L2**	**BN100LB4**	—	3870	3870	13500	15700	2210	251
45	580	2.0	31.2	—	—	**3/A 01 L2**	**BN100LB4**	—	3850	3850	13400	14700	2200	261
49	540	2.9	28.8	—	—	**3/A 03 L2**	**BN100LB4**	—	12100	13800	24700	29300	6430	271
60	435	1.3	23.4	—	—	**3/A 00 L2**	**BN100LB4**	—	3500	3500	12300	14300	2000	251
61	430	2.0	23	—	—	**3/A 01 L2**	**BN100LB4**	—	3480	3480	12300	13400	1990	261
61	430	2.9	23	—	—	**3/A 03 L2**	**BN100LB4**	—	11200	12800	23100	27300	5960	271
73	360	2.9	19.4	—	—	**3/A 03 L2**	**BN100LB4**	—	10600	12100	21900	26000	5640	271
74	355	1.3	19.1	—	—	**3/A 00 L2**	**BN100LB4**	—	3270	3270	11600	13500	1870	251
75	350	2.0	18.8	—	—	**3/A 01 L2**	**BN100LB4**	—	3250	3250	11500	12600	1860	261

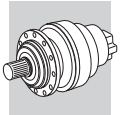

A

P_1 = 4 kW

n_2 min^{-1}	M_{n2} Nm	f_S	i	Pt kW					Rn_2 [N] MC/PC	MZ/PZ	HC	HZ	FZ	
0.29	97600	1.0	4950	—	**3/V 15 ML4**	**—**	**BN112M4**	**—**	—	—	197000	236300	90000	391
0.29	97600	1.2	4950	—	**3/V 16 ML4**	**—**	**BN112M4**	**—**	—	—	301500	338200	150000	403
0.32	83300	2.4	4449	—	**3/V 17 ML4**	**—**	**BN112M4**	**—**	—	—	442000	470000	150000	413
0.33	81800	1.0	4312	—	**3/V 14 ML4**	**—**	**BN112M4**	**—**	—	—	193200	231700	90000	379
0.34	82200	1.2	4171	—	**3/V 15 ML4**	**—**	**BN112M4**	**—**	—	—	192300	230600	90000	391
0.34	82200	1.6	4171	—	**3/V 16 ML4**	**—**	**BN112M4**	**—**	—	—	294200	330000	150000	403
0.41	69300	1.9	3514	—	**3/V 16 ML4**	**—**	**BN112M4**	**—**	—	—	287100	322100	150000	403
0.45	65100	1.2	3182	—	**3/V 14 ML4**	**—**	**BN112M4**	**—**	—	—	185000	221800	90000	379
0.50	56800	2.1	2880	—	**3/V 16 ML4**	**—**	**BN112M4**	**—**	—	—	279000	313000	150000	403
0.51	54800	1.5	2782	—	**3/V 14 ML4**	**—**	**BN112M4**	**—**	—	—	181400	217600	90000	379
0.52	52600	1.1	2773	—	**3/V 13 ML4**	**—**	**BN112M4**	**—**	—	—	192000	228600	80000	367
0.53	52800	2.1	2678	—	**3/V 16 ML4**	**—**	**BN112M4**	**—**	—	—	276200	309800	150000	403
0.57	47500	1.7	2504	—	**3/V 14 ML4**	**—**	**BN112M4**	**—**	—	—	178700	214300	90000	379
0.62	43600	1.5	2318	—	**3/V 14 ML3**	**—**	**BN112M4**	**—**	—	—	176800	212000	90000	378
0.71	38000	1.5	2019	—	**3/V 13 ML3**	**—**	**BN112M4**	**—**	—	—	186500	218500	80000	366
0.72	37500	1.9	1994	—	**3/V 14 ML3**	**—**	**BN112M4**	**—**	—	—	173000	207500	90000	378
0.73	36900	1.1	1963	—	**3/V 11 ML3**	**—**	**BN112M4**	**—**	—	—	128200	130800	65000	354
0.85	32500	1.8	1682	—	**3/V 13 ML3**	**—**	**BN112M4**	**—**	—	—	181700	212900	80000	366
0.86	32100	2.3	1662	—	**3/V 14 ML3**	**—**	**BN112M4**	**—**	—	—	168600	202200	90000	378
0.87	31600	1.3	1636	—	**3/V 11 ML3**	**—**	**BN112M4**	**—**	—	—	124900	127400	65000	354
0.90	29900	1.9	1589	—	**3/V 14 ML3**	**—**	**BN112M4**	**—**	—	—	167500	200900	90000	378
1.0	26600	1.8	1378	—	**3/V 11 ML3**	**—**	**BN112M4**	**—**	—	—	121800	124300	63200	354
1.0	27400	2.1	1418	—	**3/V 13 ML3**	**—**	**BN112M4**	**—**	—	—	177300	207700	78500	366
1.1	24600	1.3	1274	—	**3/V 11 ML3**	**—**	**BN112M4**	**—**	—	—	120500	123000	61600	354
1.1	24900	2.0	1291	—	**3/V 13 ML3**	**—**	**BN112M4**	**—**	—	—	174900	205000	76100	366
1.1	25600	2.4	1324	—	**3/V 14 ML3**	**—**	**BN112M4**	**—**	—	—	163200	195700	86300	378
1.1	25200	1.9	1339	—	**3/V 14 ML3**	**—**	**BN112M4**	**—**	—	—	163400	196000	86700	378
1.3	21900	1.3	1120	—	**3/V 10 ML3**	**—**	**BN112M4**	**—**	—	—	94200	119400	59000	342
1.3	21000	2.4	1088	—	**3/V 13 ML3**	**—**	**BN112M4**	**—**	—	—	170700	200000	71900	366
1.3	21500	2.4	1116	—	**3/V 14 ML3**	**—**	**BN112M4**	**—**	—	—	159200	191000	81500	378
1.4	19600	0.9	1004	—	**3/V 09 L3**	**—**	**BN112M4**	**—**	—	—	82000	105500	31500	330
1.4	19600	1.6	1004	—	**3/V 10 ML3**	**—**	**BN112M4**	**—**	—	—	92700	117500	56900	342
1.4	18900	1.9	1004	—	**3/V 11 ML3**	**—**	**BN112M4**	**—**	—	—	116500	118800	56900	354
1.6	18700	1.0	920	—	**3/V 10 ML3**	**—**	**BN112M4**	**—**	—	—	91500	116100	55200	342
1.6	17400	2.4	900	—	**3/V 11 ML3**	**—**	**BN112M4**	**—**	—	—	114700	117000	54800	354
1.7	17100	1.2	840	—	**3/V 09 L3**	**—**	**BN112M4**	**—**	—	—	79900	102900	29700	330
1.8	15600	1.4	800	—	**3/V 09 L3**	**—**	**BN112M4**	**—**	—	—	79400	102200	29200	330
1.9	14900	1.0	761	—	**3/V 07 L3**	**—**	**BN112M4**	**—**	34300	42800	77100	101400	35900	318
1.9	15500	0.9	761	—	**3/V 09 L3**	**—**	**BN112M4**	**—**	—	—	78800	101400	28700	330
2.2	12800	1.1	655	—	**3/V 07 L3**	**—**	**BN112M4**	**—**	33500	41900	75500	99300	34100	318
2.2	13300	1.3	655	—	**3/V 09 L3**	**—**	**BN112M4**	**—**	—	—	77100	99300	27300	330
2.8	10800	1.3	507	—	**3/V 07 L3**	**—**	**BN112M4**	**—**	32300	40400	72800	95700	31400	318
3.1	9820	1.3	460	—	**3/V 07 L3**	**—**	**BN112M4**	**—**	31900	39900	71800	94400	30400	318
3.2	8980	2.0	442	—	**3/V 09 L3**	**—**	**BN112M4**	**—**	—	—	72900	93800	24000	330
3.3	9220	1.0	427	—	**3/V 06 L3**	**—**	**BN112M4**	**—**	26300	30000	59900	69200	23000	306
3.5	9970	0.9	405	—	**—**	**3/A 07 L2**	**BN112M4**	**—**	31300	39100	70500	92700	29100	319
3.7	8530	1.1	386	—	**3/V 07 L3**	**—**	**BN112M4**	**—**	31100	38900	70000	92100	28600	318
3.9	7520	1.7	370	—	**3/V 09 L3**	**—**	**BN112M4**	**—**	—	—	71100	91500	22600	330
4.2	8390	1.4	341	—	**—**	**3/A 07 L2**	**BN112M4**	**—**	30600	38200	68800	90400	27500	319
5.1	6940	1.3	282	—	**—**	**3/A 07 L2**	**BN112M4**	**—**	30000	37500	67500	88800	25800	319
5.2	6790	1.1	276	—	**—**	**3/A 06 L2**	**BN112M4**	**—**	25000	28500	57000	65800	19900	307
5.9	5930	1.5	241	—	**—**	**3/A 07 L2**	**BN112M4**	**—**	30000	37500	67500	88800	24500	319
6.4	5490	1.6	223	—	**—**	**3/A 07 L2**	**BN112M4**	**—**	30000	37500	67500	88800	23800	319
6.5	5440	1.2	221	—	**—**	**3/A 06 L2**	**BN112M4**	**—**	25000	28500	57000	65800	18500	307
7.2	4870	1.1	198	—	**—**	**3/A 06 L2**	**BN112M4**	**—**	25000	28500	57000	65800	17800	307
7.2	4870	1.8	198	—	**—**	**3/A 07 L2**	**BN112M4**	**—**	30000	37500	67500	88800	22900	319
7.5	4680	1.7	190	—	**—**	**3/A 06 L2**	**BN112M4**	**—**	25000	28500	57000	65800	17600	307
7.9	4430	2.5	180	—	**—**	**3/A 07 L2**	**BN112M4**	**—**	30000	37500	67500	88800	22200	319
8.7	4040	1.6	164	—	**—**	**3/A 06 L2**	**BN112M4**	**—**	25000	28500	57000	65800	16700	307
9.2	3820	2.4	155	—	**—**	**3/A 07 L2**	**BN112M4**	**—**	30000	37500	67500	88800	21100	319
10.1	3550	1.0	141	—	**—**	**3/A 05 L2**	**BN112M4**	**—**	20600	23500	39700	47100	10900	295
10.1	3470	2.2	141	—	**—**	**3/A 06 L2**	**BN112M4**	**—**	24500	27900	55900	64600	15900	307
11.4	3140	1.7	125	—	**—**	**3/A 06 L2**	**BN112M4**	**—**	23500	26800	53900	62200	15300	307
11.8	3040	1.2	121	—	**—**	**3/A 05 L2**	**BN112M4**	**—**	19600	22300	38000	45000	10400	295
12.8	2760	2.2	112	—	**—**	**3/A 06 L2**	**BN112M4**	**—**	22700	25900	52200	60300	14700	307

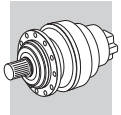

P_1 = 4 kW

n_2 min^{-1}	M_{n2} Nm	f_S	i	Pt kW					Rn_2 [N] MC/PC	MZ/PZ	HC	HZ	FZ	
13.8	2610	1.2	104	—	—	**3/A 05 L2**	**BN112M4**	—	18600	21200	36200	42900	9840	295
14.0	2560	1.0	102	—	—	**3/A 04 L2**	**BN112M4**	—	18500	21100	36100	42700	9790	283
14.5	2470	2.2	98.3	—	—	**3/A 06 L2**	**BN112M4**	—	21700	24800	50200	58000	14100	307
15.8	2280	1.0	90.7	—	—	**3/A 04 L2**	**BN112M4**	—	17800	20300	34800	41300	9420	283
16.2	2230	2.8	88.5	—	—	**3/A 06 L2**	**BN112M4**	—	21000	23900	48700	56200	13600	307
16.7	2150	1.6	85.6	—	—	**3/A 05 L2**	**BN112M4**	—	17400	19900	34200	40600	9240	295
17.5	2050	1.2	81.7	—	—	**3/A 04 L2**	**BN112M4**	—	17200	19600	33800	40000	9100	283
18.9	1910	1.6	75.8	—	—	**3/A 05 L2**	**BN112M4**	—	16700	19100	33000	39100	8870	295
19.5	1840	1.0	73.2	—	—	**3/A 03 L2**	**BN112M4**	—	16500	18900	32700	38700	8770	271
19.7	1820	1.8	72.5	—	—	**3/A 05 L2**	**BN112M4**	—	16500	18800	32600	38600	8740	295
20.9	1720	1.5	68.4	—	—	**3/A 04 L2**	**BN112M4**	—	16200	18500	32000	37900	8580	283
22.7	1580	1.0	62.9	—	—	**3/A 03 L2**	**BN112M4**	—	15700	18000	31200	37000	8340	271
22.8	1570	2.0	62.6	—	—	**3/A 05 L2**	**BN112M4**	—	15700	17900	31200	36900	8330	295
22.9	1570	1.8	62.4	—	—	**3/A 04 L2**	**BN112M4**	—	15700	17900	31100	36900	8320	283
25.1	1430	2.3	57.0	—	—	**3/A 05 L2**	**BN112M4**	—	15200	17400	30300	35900	8070	295
26.2	1370	1.7	54.5	—	—	**3/A 04 L2**	**BN112M4**	—	15000	17100	29900	35400	7950	283
26.8	1340	2.3	53.3	—	—	**3/A 05 L2**	**BN112M4**	—	14900	17000	29700	35200	7890	295
27.2	1320	1.3	52.5	—	—	**3/A 03 L2**	**BN112M4**	—	14800	16900	29600	35000	7850	271
28.8	1250	1.8	49.7	—	—	**3/A 04 L2**	**BN112M4**	—	14500	16600	29100	34500	7710	283
32	1110	2.6	44.3	—	—	**3/A 04 L2**	**BN112M4**	—	14000	16000	28100	33300	7420	283
33	1090	1.6	43.4	—	—	**3/A 03 L2**	**BN112M4**	—	13900	15900	27900	33100	7370	271
33	1110	3.0	44.0	—	—	**3/A 05 L2**	**BN112M4**	—	14000	15900	28000	33200	7400	295
35	1020	1.6	40.5	—	—	**3/A 03 L2**	**BN112M4**	—	13600	15500	27300	32400	7200	271
37	980	2.3	39.1	—	—	**3/A 04 L2**	**BN112M4**	—	13400	15300	27100	32100	7120	283
41	890	2.6	35.3	—	—	**3/A 04 L2**	**BN112M4**	—	13000	14800	26200	31100	6880	283
43	840	2.1	33.5	—	—	**3/A 03 L2**	**BN112M4**	—	12700	14600	25800	30600	6760	271
46	780	1.5	31.2	—	—	**3/A 01 L2**	**BN112M4**	—	3850	3850	13400	14700	2200	261
47	760	3.0	30.2	—	—	**3/A 04 L2**	**BN112M4**	—	12300	14100	25000	29700	6530	283
50	720	2.1	28.8	—	—	**3/A 03 L2**	**BN112M4**	—	12100	13800	24700	29300	6430	271
56	640	3.0	25.6	—	—	**3/A 04 L2**	**BN112M4**	—	11600	13300	23800	28200	6180	283
61	590	1.0	23.4	—	—	**3/A 00 L2**	**BN112M4**	—	3500	3500	12300	14300	2000	251
62	580	1.5	23.0	—	—	**3/A 01 L2**	**BN112M4**	—	3480	3480	12300	13400	1990	261
62	580	2.1	23.0	—	—	**3/A 03 L2**	**BN112M4**	—	11200	12800	23100	27300	5960	271
74	490	2.2	19.4	—	—	**3/A 03 L2**	**BN112M4**	—	10600	12100	21900	26000	5640	271
75	480	1.0	19.1	—	—	**3/A 00 L2**	**BN112M4**	—	3270	3270	11600	13500	1870	251
76	475	1.5	18.8	—	—	**3/A 01 L2**	**BN112M4**	—	3250	3250	11500	12600	1860	261

P_1 = 5.5 kW

n_2 min^{-1}	M_{n2} Nm	f_S	i	Pt kW					Rn_2 [N] MC/PC	MZ/PZ	HC	HZ	FZ	
0.28	139100	1.9	5099	—	**3/V 18 ML4**	—	**BN132S4**	—	—	—	448200	506000	200000	422
0.29	130100	0.9	4950	—	**3/V 16 ML4**	—	**BN132S4**	—	—	—	301500	338200	150000	403
0.29	135500	0.9	4970	—	**3/V 17 ML4**	—	**BN132S4**	—	—	—	442000	470000	150000	413
0.32	111100	1.8	4449	—	**3/V 17 ML4**	—	**BN132S4**	—	—	—	442000	470000	150000	413
0.32	124500	2.7	4457	—	**3/V 19 L4**	—	**BN132S4**	—	—	—	534200	588100	200000	432
0.33	119600	2.5	4386	—	**3/V 18 ML4**	—	**BN132S4**	—	—	—	438600	495300	200000	422
0.35	109600	0.9	4171	—	**3/V 15 ML4**	—	**BN132S4**	—	—	—	192300	230600	90000	391
0.35	109600	1.2	4171	—	**3/V 16 ML4**	—	**BN132S4**	—	—	—	294200	330000	150000	403
0.35	112600	1.6	4129	—	**3/V 17 ML4**	—	**BN132S4**	—	—	—	442000	470000	150000	413
0.39	100800	3.0	3696	—	**3/V 18 ML4**	—	**BN132S4**	—	—	—	428000	483300	200000	422
0.41	96300	1.0	3489	—	**3/V 15 ML4**	—	**BN132S4**	—	—	—	187400	224800	90000	391
0.41	92400	1.5	3514	—	**3/V 16 ML4**	—	**BN132S4**	—	—	—	287100	322100	150000	403
0.44	91100	1.1	3300	—	**3/V 15 ML4**	—	**BN132S4**	—	—	—	185900	223000	90000	391
0.45	86400	2.2	3168	—	**3/V 17 ML4**	—	**BN132S4**	—	—	—	440100	467600	150000	413
0.50	75700	1.6	2880	—	**3/V 16 ML4**	—	**BN132S4**	—	—	—	279000	313000	150000	403
0.52	73100	1.1	2782	—	**3/V 14 ML4**	—	**BN132S4**	—	—	—	181400	217600	90000	379
0.52	76700	1.3	2780	—	**3/V 15 ML4**	—	**BN132S4**	—	—	—	181400	217600	90000	391
0.52	71100	2.3	2773	—	**3/V 17 ML4**	—	**BN132S4**	—	—	—	431800	458800	150000	413
0.54	70400	1.6	2678	—	**3/V 16 ML4**	—	**BN132S4**	—	—	—	276200	309800	150000	403
0.58	63300	1.3	2504	—	**3/V 14 ML4**	—	**BN132S4**	—	—	—	178700	214300	90000	379
0.61	64700	2.1	2343	—	**3/V 16 ML4**	—	**BN132S4**	—	—	—	270900	303900	150000	403

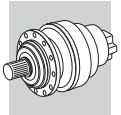

A

P_1 = 5.5 kW

n_2 min^{-1}	M_{n2} Nm	f_S	i	Pt kW					Rn_2 [N] MC/PC	MZ/PZ	HC	HZ	FZ	
0.62	58100	1.1	2318	—	**3/V 14 ML3**	**—**	**BN132S4**	**—**	—	—	176800	212000	90000	378
0.62	57300	1.4	2318	—	**3/V 15 ML3**	**—**	**BN132S4**	**—**	—	—	176800	212000	90000	390
0.71	50600	1.1	2019	—	**3/V 13 ML3**	**—**	**BN132S4**	**—**	—	—	186500	218500	80000	366
0.72	50000	1.4	1994	—	**3/V 14 ML3**	**—**	**BN132S4**	**—**	—	—	173000	207500	90000	378
0.72	49300	1.9	1994	—	**3/V 15 ML3**	**—**	**BN132S4**	**—**	—	—	173000	207500	90000	390
0.75	53000	2.1	1920	—	**3/V 16 ML4**	**—**	**BN132S4**	**—**	—	—	263300	295400	150000	403
0.81	49300	2.1	1785	—	**3/V 16 ML4**	**—**	**BN132S4**	**—**	—	—	260600	292400	150000	403
0.86	43300	1.3	1682	—	**3/V 13 ML3**	**—**	**BN132S4**	**—**	—	—	181700	212900	80000	366
0.87	42800	1.7	1662	—	**3/V 14 ML3**	**—**	**BN132S4**	**—**	—	—	168600	202200	90000	378
0.87	42800	2.1	1662	—	**3/V 15 ML3**	**—**	**BN132S4**	**—**	—	—	168600	202200	90000	390
0.88	42100	1.0	1636	—	**3/V 11 ML3**	**—**	**BN132S4**	**—**	—	—	124900	127400	65000	354
0.89	42800	0.9	1620	—	**3/V 13 ML3**	**—**	**BN132S4**	**—**	—	—	180700	211700	80000	366
0.91	39800	1.4	1589	—	**3/V 14 ML3**	**—**	**BN132S4**	**—**	—	—	167500	200900	90000	378
0.91	40900	2.7	1589	—	**3/V 16 ML3**	**—**	**BN132S4**	**—**	—	—	256300	287500	150000	402
1.0	35500	1.3	1378	—	**3/V 11 ML3**	**—**	**BN132S4**	**—**	—	—	121800	124300	63200	354
1.0	36500	1.6	1418	—	**3/V 13 ML3**	**—**	**BN132S4**	**—**	—	—	177300	207700	78500	366
1.0	36000	2.4	1400	—	**3/V 15 ML3**	**—**	**BN132S4**	**—**	—	—	164500	197300	88000	390
1.1	32800	1.0	1274	—	**3/V 11 ML3**	**—**	**BN132S4**	**—**	—	—	120500	123000	61600	354
1.1	33200	1.5	1291	—	**3/V 13 ML3**	**—**	**BN132S4**	**—**	—	—	174900	205000	76100	366
1.1	34100	1.8	1324	—	**3/V 14 ML3**	**—**	**BN132S4**	**—**	—	—	163200	195700	86300	378
1.1	33600	1.4	1339	—	**3/V 14 ML3**	**—**	**BN132S4**	**—**	—	—	163400	196000	86700	378
1.1	35100	2.6	1329	—	**3/V 15 ML3**	**—**	**BN132S4**	**—**	—	—	163300	195800	86400	390
1.3	29200	1.0	1120	—	**3/V 10 ML3**	**—**	**BN132S4**	**—**	—	—	94200	119400	59000	342
1.3	29100	1.6	1103	—	**3/V 11 ML3**	**—**	**BN132S4**	**—**	—	—	118000	120400	58700	354
1.3	28000	1.8	1088	—	**3/V 13 ML3**	**—**	**BN132S4**	**—**	—	—	170700	200000	71900	366
1.3	28700	1.8	1116	—	**3/V 14 ML3**	**—**	**BN132S4**	**—**	—	—	159200	191000	81500	378
1.4	26200	1.2	1004	—	**3/V 10 ML3**	**—**	**BN132S4**	**—**	—	—	92700	117500	56900	342
1.4	25200	1.4	1004	—	**3/V 11 ML3**	**—**	**BN132S4**	**—**	—	—	116500	118800	56900	354
1.4	28400	1.9	1009	—	**3/V 13 ML3**	**—**	**BN132S4**	**—**	—	—	168900	197900	70100	366
1.4	28000	2.2	997	—	**3/V 14 ML3**	**—**	**BN132S4**	**—**	—	—	156700	187900	78500	378
1.6	23200	1.8	900	—	**3/V 11 ML3**	**—**	**BN132S4**	**—**	—	—	114700	117000	54800	354
1.6	23600	2.3	893	—	**3/V 14 ML3**	**—**	**BN132S4**	**—**	—	—	154200	185000	75700	378
1.7	23300	1.9	827	—	**3/V 11 ML3**	**—**	**BN132S4**	**—**	—	—	113300	115600	53300	354
1.7	23000	2.3	870	—	**3/V 13 ML3**	**—**	**BN132S4**	**—**	—	—	165300	193700	66700	366
1.8	20900	1.0	800	—	**3/V 09 L3**	**—**	**BN132S4**	**—**	—	—	79400	102200	29200	330
1.8	22300	2.2	794	—	**3/V 14 ML3**	**—**	**BN132S4**	**—**	—	—	151700	181900	72800	378
1.9	22000	1.0	773	—	**3/V 10 ML3**	**—**	**BN132S4**	**—**	—	—	89300	113200	52100	342
1.9	19600	2.3	741	—	**3/V 13 ML3**	**—**	**BN132S4**	**—**	—	—	161600	189300	63200	366
2.0	19000	2.2	720	—	**3/V 11 ML3**	**—**	**BN132S4**	**—**	—	—	111100	113300	50900	354
2.1	20700	1.0	701	—	**3/V 10 ML3**	**—**	**BN132S4**	**—**	—	—	88100	111600	50400	342
2.1	18400	2.3	695	—	**3/V 14 ML3**	**—**	**BN132S4**	**—**	—	—	148800	178500	69700	378
2.2	17700	1.0	655	—	**3/V 09 L3**	**—**	**BN132S4**	**—**	—	—	77100	99300	27300	330
2.2	18100	2.2	644	—	**3/V 11 ML3**	**—**	**BN132S4**	**—**	—	—	109300	111500	49000	354
2.3	17500	1.1	614	—	**3/V 10 ML3**	**—**	**BN132S4**	**—**	—	—	86400	109500	48300	342
2.6	15900	1.6	560	—	**3/V 10 ML3**	**—**	**BN132S4**	**—**	—	—	85300	108100	46800	342
2.8	14400	0.9	507	—	**3/V 07 L3**	**—**	**BN132S4**	**—**	32300	40400	72800	95700	31400	318
2.8	14400	1.0	507	—	**3/V 09 L3**	**—**	**BN132S4**	**—**	—	—	74400	95700	25100	330
2.8	14400	1.7	507	—	**3/V 10 ML3**	**—**	**BN132S4**	**—**	—	—	84100	106600	45300	342
3.1	13100	0.9	460	—	**3/V 07 L3**	**—**	**BN132S4**	**—**	31900	39900	71800	94400	30400	318
3.3	12000	1.5	442	—	**3/V 09 L3**	**—**	**BN132S4**	**—**	—	—	72900	93800	24000	330
3.3	12400	2.2	436	—	**3/V 10 ML3**	**—**	**BN132S4**	**—**	—	—	82300	104300	43100	342
3.9	10000	1.3	370	—	**3/V 09 L3**	**—**	**BN132S4**	**—**	—	—	71100	91500	22600	330
4.2	11200	1.0	341	—	**—**	**3/A 07 L2**	**BN132S4**	**—**	30600	38200	68800	90400	27500	319
5.1	9260	0.9	282	—	**—**	**3/A 07 L2**	**BN132S4**	**—**	30000	37500	67500	88800	25800	319
6.0	7910	1.1	241	—	**—**	**3/A 07 L2**	**BN132S4**	**—**	30000	37500	67500	88800	24500	319
6.5	7320	1.2	223	—	**—**	**3/A 07 L2**	**BN132S4**	**—**	30000	37500	67500	88800	23800	319
7.3	6500	1.3	198	—	**—**	**3/A 07 L2**	**BN132S4**	**—**	30000	37500	67500	88800	22900	319
7.6	6240	1.2	190	—	**—**	**3/A 06 L2**	**BN132S4**	**—**	25000	28500	57000	65800	17600	307
8.0	5910	1.8	180	—	**—**	**3/A 07 L2**	**BN132S4**	**—**	30000	37500	67500	88800	22200	319
8.8	5380	1.2	164	—	**—**	**3/A 06 L2**	**BN132S4**	**—**	25000	28500	57000	65800	16700	307
9.3	5090	1.8	155	—	**—**	**3/A 07 L2**	**BN132S4**	**—**	30000	37500	67500	88800	21100	319
10.2	4630	1.7	141	—	**—**	**3/A 06 L2**	**BN132S4**	**—**	24500	27900	55900	64600	15900	307
10.3	4600	2.4	140	—	**—**	**3/A 07 L2**	**BN132S4**	**—**	29300	36700	66200	87000	20400	319
11.1	4270	2.6	130	—	**—**	**3/A 07 L2**	**BN132S4**	**—**	28600	35700	64600	85000	19900	319
11.5	4190	1.3	125	—	**—**	**3/A 06 L2**	**BN132S4**	**—**	23500	26800	53900	62200	15300	307

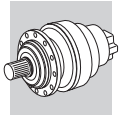

P_1 = 5.5 kW

n_2 min^{-1}	M_{n2} Nm	f_S	i	Pt kW					Rn_2 [N] MC/PC	MZ/PZ	HC	HZ	FZ	
12.9	3680	1.7	112	—	—	**3/A 06 L2**	**BN132S4**	—	22700	25900	52200	60300	14700	307
13.2	3580	2.5	109	—	—	**3/A 07 L2**	**BN132S4**	—	26900	33700	61300	80600	18800	319
14.6	3300	1.6	98.3	—	—	**3/A 06 L2**	**BN132S4**	—	21700	24800	50200	58000	14100	307
16.3	2970	2.1	88.5	—	—	**3/A 06 L2**	**BN132S4**	—	21000	23900	48700	56200	13600	307
16.8	2870	1.2	85.6	—	—	**3/A 05 L2**	**BN132S4**	—	17400	19900	34200	40600	9240	295
17.7	2720	2.4	81.2	—	—	**3/A 06 L2**	**BN132S4**	—	20400	23200	47400	54700	13200	307
19.0	2540	1.2	75.8	—	—	**3/A 05 L2**	**BN132S4**	—	16700	19100	33000	39100	8870	295
19.9	2430	1.4	72.5	—	—	**3/A 05 L2**	**BN132S4**	—	16500	18800	32600	38600	8740	295
20.6	2340	2.4	69.9	—	—	**3/A 06 L2**	**BN132S4**	—	19400	22100	45300	52300	12600	307
21.1	2290	1.1	68.4	—	—	**3/A 04 L2**	**BN132S4**	—	16200	18500	32000	37900	8580	283
23.0	2100	1.5	62.6	—	—	**3/A 05 L2**	**BN132S4**	—	15700	17900	31200	36900	8330	295
23.1	2090	1.4	62.4	—	—	**3/A 04 L2**	**BN132S4**	—	15700	17900	31100	36900	8320	283
24.0	2010	3.0	60.1	—	—	**3/A 06 L2**	**BN132S4**	—	18400	21000	43300	50000	12000	307
25.3	1910	1.7	57.0	—	—	**3/A 05 L2**	**BN132S4**	—	15200	17400	30300	35900	8070	295
25.9	1870	2.4	55.7	—	—	**3/A 06 L2**	**BN132S4**	—	18000	20500	42300	48900	11700	307
26.4	1830	1.3	54.5	—	—	**3/A 04 L2**	**BN132S4**	—	15000	17100	29900	35400	7950	283
27.0	1790	1.7	53.3	—	—	**3/A 05 L2**	**BN132S4**	—	14900	17000	29700	35200	7890	295
27.9	1730	3.0	51.7	—	—	**3/A 06 L2**	**BN132S4**	—	17500	20000	41400	47800	11400	307
29.0	1670	1.4	49.7	—	—	**3/A 04 L2**	**BN132S4**	—	14500	16600	29100	34500	7710	283
31	1580	2.4	47.2	—	—	**3/A 06 L2**	**BN132S4**	—	17000	19400	40300	46500	11000	307
33	1490	1.9	44.3	—	—	**3/A 04 L2**	**BN132S4**	—	14000	16000	28100	33300	7420	283
33	1480	2.2	44.0	—	—	**3/A 05 L2**	**BN132S4**	—	14000	15900	28000	33200	7400	295
37	1310	1.7	39.1	—	—	**3/A 04 L2**	**BN132S4**	—	13400	15300	27100	32100	7120	283
37	1310	2.3	39.0	—	—	**3/A 05 L2**	**BN132S4**	—	13400	15300	27000	32000	7110	295
41	1180	1.9	35.3	—	—	**3/A 04 L2**	**BN132S4**	—	13000	14800	26200	31100	6880	283
41	1170	3.0	34.9	—	—	**3/A 06 L2**	**BN132S4**	—	15400	17500	36800	42500	9990	307
48	1010	2.2	30.2	—	—	**3/A 04 L2**	**BN132S4**	—	12300	14100	25000	29700	6530	283
56	860	2.2	25.6	—	—	**3/A 04 L2**	**BN132S4**	—	11600	13300	23800	28200	6180	283

P_1 = 7.5 kW

n_2 min^{-1}	M_{n2} Nm	f_S	i	Pt kW					Rn_2 [N] MC/PC	MZ/PZ	HC	HZ	FZ	
0.28	193100	1.4	5099	—	**3/V 18 ML4**	—	**BN132MA4**	—	—	—	448200	506000	200000	422
0.28	183800	2.2	5164	—	**3/V 19 L4**	—	**BN132MA4**	—	—	—	545500	600600	200000	432
0.32	154300	1.3	4449	—	**3/V 17 ML4**	—	**BN132MA4**	—	—	—	442000	470000	150000	413
0.32	172900	1.9	4457	—	**3/V 19 L4**	—	**BN132MA4**	—	—	—	534200	588100	200000	432
0.33	166100	1.8	4386	—	**3/V 18 ML4**	—	**BN132MA4**	—	—	—	438600	495300	200000	422
0.35	156400	1.1	4129	—	**3/V 17 ML4**	—	**BN132MA4**	—	—	—	442000	470000	150000	413
0.35	155100	2.5	4095	—	**3/V 19 L4**	—	**BN132MA4**	—	—	—	527700	581100	200000	432
0.39	140000	2.1	3696	—	**3/V 18 ML4**	—	**BN132MA4**	—	—	—	428000	483300	200000	422
0.41	128300	1.0	3514	—	**3/V 16 ML4**	—	**BN132MA4**	—	—	—	287100	322100	150000	403
0.41	132400	2.2	3495	—	**3/V 18 ML4**	—	**BN132MA4**	—	—	—	424600	479400	200000	422
0.45	120000	1.6	3168	—	**3/V 17 ML4**	—	**BN132MA4**	—	—	—	440100	467600	150000	413
0.45	125300	2.8	3231	—	**3/V 19 L4**	—	**BN132MA4**	—	—	—	510200	561700	200000	432
0.49	111500	2.5	2945	—	**3/V 18 ML4**	—	**BN132MA4**	—	—	—	414400	467900	200000	422
0.50	105100	1.1	2880	—	**3/V 16 ML4**	—	**BN132MA4**	—	—	—	279000	313000	150000	403
0.52	106600	0.9	2780	—	**3/V 15 ML4**	—	**BN132MA4**	—	—	—	181400	217600	90000	391
0.52	98700	1.7	2773	—	**3/V 17 ML4**	—	**BN132MA4**	—	—	—	431800	458800	150000	413
0.54	97800	1.1	2678	—	**3/V 16 ML4**	—	**BN132MA4**	—	—	—	276200	309800	150000	403
0.58	88000	0.9	2504	—	**3/V 14 ML4**	—	**BN132MA4**	—	—	—	178700	214300	90000	379
0.61	89800	1.5	2343	—	**3/V 16 ML4**	—	**BN132MA4**	—	—	—	270900	303900	150000	403
0.62	79600	1.0	2318	—	**3/V 15 ML3**	—	**BN132MA4**	—	—	—	176800	212000	90000	390
0.63	86900	2.4	2295	—	**3/V 18 ML4**	—	**BN132MA4**	—	—	—	399900	451500	200000	422
0.72	69400	1.0	1994	—	**3/V 14 ML3**	—	**BN132MA4**	—	—	—	173000	207500	90000	378
0.72	68500	1.3	1994	—	**3/V 15 ML3**	—	**BN132MA4**	—	—	—	173000	207500	90000	390
0.75	73600	1.5	1920	—	**3/V 16 ML4**	—	**BN132MA4**	—	—	—	263300	295400	150000	403
0.81	68400	1.5	1785	—	**3/V 16 ML4**	—	**BN132MA4**	—	—	—	260600	292400	150000	403
0.86	60100	0.9	1682	—	**3/V 13 ML3**	—	**BN132MA4**	—	—	—	181700	212900	80000	366
0.87	59400	1.2	1662	—	**3/V 14 ML3**	—	**BN132MA4**	—	—	—	168600	202200	90000	378
0.87	59400	1.5	1662	—	**3/V 15 ML3**	—	**BN132MA4**	—	—	—	168600	202200	90000	390
0.91	55300	1.0	1589	—	**3/V 14 ML3**	—	**BN132MA4**	—	—	—	167500	200900	90000	378

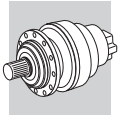

A

P_1 = 7.5 kW

n_2 min^{-1}	M_{n2} Nm	f_S	i	Pt kW					Rn_2 [N] MC/PC	MZ/PZ	HC	HZ	FZ	
0.91	56800	2.0	1589	—	**3/V 16 ML3**	**—**	**BN132MA4**	**—**	—	—	256300	287500	150000	402
1.0	49300	1.0	1378	—	**3/V 11 ML3**	**—**	**BN132MA4**	**—**	—	—	121800	124300	63200	354
1.0	50700	1.1	1418	—	**3/V 13 ML3**	**—**	**BN132MA4**	**—**	—	—	177300	207700	78500	366
1.0	50100	1.7	1400	—	**3/V 15 ML3**	**—**	**BN132MA4**	**—**	—	—	164500	197300	88000	390
1.1	46200	1.1	1291	—	**3/V 13 ML3**	**—**	**BN132MA4**	**—**	—	—	174900	205000	76100	366
1.1	47300	1.3	1324	—	**3/V 14 ML3**	**—**	**BN132MA4**	**—**	—	—	163200	195700	86300	378
1.1	46600	1.0	1339	—	**3/V 14 ML3**	**—**	**BN132MA4**	**—**	—	—	163400	196000	86700	378
1.1	48800	1.9	1329	—	**3/V 15 ML3**	**—**	**BN132MA4**	**—**	—	—	163300	195800	86400	390
1.1	47300	2.4	1324	—	**3/V 16 ML3**	**—**	**BN132MA4**	**—**	—	—	249700	280100	143900	402
1.3	40500	1.1	1103	—	**3/V 11 ML3**	**—**	**BN132MA4**	**—**	—	—	118000	120400	58700	354
1.3	38900	1.3	1088	—	**3/V 13 ML3**	**—**	**BN132MA4**	**—**	—	—	170700	200000	71900	366
1.3	39900	1.3	1116	—	**3/V 14 ML3**	**—**	**BN132MA4**	**—**	—	—	159200	191000	81500	378
1.3	41100	2.2	1120	—	**3/V 15 ML3**	**—**	**BN132MA4**	**—**	—	—	159300	191100	81600	390
1.4	35000	1.0	1004	—	**3/V 11 ML3**	**—**	**BN132MA4**	**—**	—	—	116500	118800	56900	354
1.4	39400	1.4	1009	—	**3/V 13 ML3**	**—**	**BN132MA4**	**—**	—	—	168900	197900	70100	366
1.4	38900	1.6	997	—	**3/V 14 ML3**	**—**	**BN132MA4**	**—**	—	—	156700	187900	78500	378
1.4	38900	2.3	997	—	**3/V 15 ML3**	**—**	**BN132MA4**	**—**	—	—	156700	187900	78500	390
1.4	39400	3.0	1059	—	**3/V 16 ML3**	**—**	**BN132MA4**	**—**	—	—	241900	271300	133600	402
1.6	32200	1.3	900	—	**3/V 11 ML3**	**—**	**BN132MA4**	**—**	—	—	114700	117000	54800	354
1.6	32800	1.7	893	—	**3/V 14 ML3**	**—**	**BN132MA4**	**—**	—	—	154200	185000	75700	378
1.7	32300	1.3	827	—	**3/V 11 ML3**	**—**	**BN132MA4**	**—**	—	—	113300	115600	53300	354
1.7	31900	1.7	870	—	**3/V 13 ML3**	**—**	**BN132MA4**	**—**	—	—	165300	193700	66700	366
1.7	32800	2.5	840	—	**3/V 15 ML3**	**—**	**BN132MA4**	**—**	—	—	152900	183400	74200	390
1.8	31000	1.6	794	—	**3/V 14 ML3**	**—**	**BN132MA4**	**—**	—	—	151700	181900	72800	378
1.9	27200	1.7	741	—	**3/V 13 ML3**	**—**	**BN132MA4**	**—**	—	—	161600	189300	63200	366
2.0	26400	1.6	720	—	**3/V 11 ML3**	**—**	**BN132MA4**	**—**	—	—	111100	113300	50900	354
2.1	25500	1.7	695	—	**3/V 14 ML3**	**—**	**BN132MA4**	**—**	—	—	148800	178500	69700	378
2.2	25100	1.6	644	—	**3/V 11 ML3**	**—**	**BN132MA4**	**—**	—	—	109300	111500	49000	354
2.6	22100	1.1	560	—	**3/V 10 ML3**	**—**	**BN132MA4**	**—**	—	—	85300	108100	46800	342
2.8	20000	1.2	507	—	**3/V 10 ML3**	**—**	**BN132MA4**	**—**	—	—	84100	106600	45300	342
3.3	16600	1.1	442	—	**3/V 09 L3**	**—**	**BN132MA4**	**—**	—	—	72900	93800	24000	330
3.3	17200	1.5	436	—	**3/V 10 ML3**	**—**	**BN132MA4**	**—**	—	—	82300	104300	43100	342
3.9	13900	0.9	370	—	**3/V 09 L3**	**—**	**BN132MA4**	**—**	—	—	71100	91500	22600	330
7.3	9030	1.0	198	—	**—**	**3/A 07 L2**	**BN132MA4**	**—**	30000	37500	67500	88800	22900	319
8.0	8210	1.3	180	—	**—**	**3/A 07 L2**	**BN132MA4**	**—**	30000	37500	67500	88800	22200	319
9.3	7070	1.3	155	—	**—**	**3/A 07 L2**	**BN132MA4**	**—**	30000	37500	67500	88800	21100	319
10.2	6430	1.2	141	—	**—**	**3/A 06 L2**	**BN132MA4**	**—**	24500	27900	55900	64600	15900	307
10.3	6380	1.7	140	—	**—**	**3/A 07 L2**	**BN132MA4**	**—**	29300	36700	66200	87000	20400	319
11.1	5930	1.9	130	—	**—**	**3/A 07 L2**	**BN132MA4**	**—**	28600	35700	64600	85000	19900	319
11.5	5820	0.9	125	—	**—**	**3/A 06 L2**	**BN132MA4**	**—**	23500	26800	53900	62200	15300	307
12.9	5110	1.2	112	—	**—**	**3/A 06 L2**	**BN132MA4**	**—**	22700	25900	52200	60300	14700	307
13.2	4970	1.8	109	—	**—**	**3/A 07 L2**	**BN132MA4**	**—**	26900	33700	61300	80600	18800	319
14.6	4580	1.2	98.3	—	**—**	**3/A 06 L2**	**BN132MA4**	**—**	21700	24800	50200	58000	14100	307
16.3	4120	1.5	88.5	—	**—**	**3/A 06 L2**	**BN132MA4**	**—**	21000	23900	48700	56200	13600	307
16.4	4080	2.5	87.7	—	**—**	**3/A 07 L2**	**BN132MA4**	**—**	25100	31400	57500	75600	17500	319
17.7	3780	1.7	81.2	—	**—**	**3/A 06 L2**	**BN132MA4**	**—**	20400	23200	47400	54700	13200	307
19.9	3380	1.0	72.5	—	**—**	**3/A 05 L2**	**BN132MA4**	**—**	16500	18800	32600	38600	8740	295
20.6	3250	1.7	69.9	—	**—**	**3/A 06 L2**	**BN132MA4**	**—**	19400	22100	45300	52300	12600	307
21.1	3180	2.5	68.3	—	**—**	**3/A 07 L2**	**BN132MA4**	**—**	23100	28900	53300	70100	16100	319
23.0	2910	1.1	62.6	—	**—**	**3/A 05 L2**	**BN132MA4**	**—**	15700	17900	31200	36900	8330	295
23.1	2910	1.0	62.4	—	**—**	**3/A 04 L2**	**BN132MA4**	**—**	15700	17900	31100	36900	8320	283
24.0	2800	2.1	60.1	—	**—**	**3/A 06 L2**	**BN132MA4**	**—**	18400	21000	43300	50000	12000	307
25.1	2670	2.5	57.3	—	**—**	**3/A 07 L2**	**BN132MA4**	**—**	21800	27200	50600	66500	15200	319
25.3	2650	1.2	57.0	—	**—**	**3/A 05 L2**	**BN132MA4**	**—**	15200	17400	30300	35900	8070	295
25.9	2590	1.7	55.7	—	**—**	**3/A 06 L2**	**BN132MA4**	**—**	18000	20500	42300	48900	11700	307
26.4	2540	0.9	54.5	—	**—**	**3/A 04 L2**	**BN132MA4**	**—**	15000	17100	29900	35400	7950	283
27.0	2480	1.2	53.3	—	**—**	**3/A 05 L2**	**BN132MA4**	**—**	14900	17000	29700	35200	7890	295
27.9	2410	2.1	51.7	—	**—**	**3/A 06 L2**	**BN132MA4**	**—**	17500	20000	41400	47800	11400	307
29.0	2310	1.0	49.7	—	**—**	**3/A 04 L2**	**BN132MA4**	**—**	14500	16600	29100	34500	7710	283
31	2200	1.7	47.2	—	**—**	**3/A 06 L2**	**BN132MA4**	**—**	17000	19400	40300	46500	11000	307
33	2060	1.4	44.3	—	**—**	**3/A 04 L2**	**BN132MA4**	**—**	14000	16000	28100	33300	7420	283
33	2050	1.6	44.0	—	**—**	**3/A 05 L2**	**BN132MA4**	**—**	14000	15900	28000	33200	7400	295
35	1910	2.6	41.1	—	**—**	**3/A 06 L2**	**BN132MA4**	**—**	16200	18500	38600	44600	10500	307
37	1820	1.2	39.1	—	**—**	**3/A 04 L2**	**BN132MA4**	**—**	13400	15300	27100	32100	7120	283
37	1820	1.7	39.0	—	**—**	**3/A 05 L2**	**BN132MA4**	**—**	13400	15300	27000	32000	7110	295

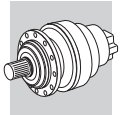

P_1 = 7.5 kW

n_2 min^{-1}	M_{n2} Nm	f_S	i	Pt kW					Rn_2 [N] MC/PC	MZ/PZ	HC	HZ	FZ	
41	1640	1.4	35.3	—	—	**3/A 04 L2**	**BN132MA4**	—	13000	14800	26200	31100	6880	283
41	1620	2.1	34.9	—	—	**3/A 06 L2**	**BN132MA4**	—	15400	17500	36800	42500	9990	307
44	1520	2.6	32.7	—	—	**3/A 06 L2**	**BN132MA4**	—	15000	17200	36100	41700	9780	307
45	1500	2.2	32.2	—	—	**3/A 05 L2**	**BN132MA4**	—	12600	14400	25500	30300	6670	295
48	1410	1.6	30.2	—	—	**3/A 04 L2**	**BN132MA4**	—	12300	14100	25000	29700	6530	283
52	1290	2.2	27.7	—	—	**3/A 04 L2**	**BN132MA4**	—	12000	13700	24400	28900	6350	283
52	1290	2.2	27.7	—	—	**3/A 05 L2**	**BN132MA4**	—	12000	13700	24400	28900	6350	295
52	1290	2.6	27.7	—	—	**3/A 06 L2**	**BN132MA4**	—	14200	16200	34300	39600	9250	307
56	1190	1.6	25.6	—	—	**3/A 04 L2**	**BN132MA4**	—	11600	13300	23800	28200	6180	283
65	1030	2.2	22.1	—	—	**3/A 04 L2**	**BN132MA4**	—	11100	12700	22800	27000	5880	283
65	1030	2.2	22.1	—	—	**3/A 05 L2**	**BN132MA4**	—	11100	12700	22800	27000	5880	295
77	870	2.2	18.7	—	—	**3/A 04 L2**	**BN132MA4**	—	10500	12000	21700	25700	5570	283
77	870	2.2	18.7	—	—	**3/A 05 L2**	**BN132MA4**	—	10500	12000	21700	25700	5570	295

P_1 = 9.2 kW

n_2 min^{-1}	M_{n2} Nm	f_S	i	Pt kW					Rn_2 [N] MC/PC	MZ/PZ	HC	HZ	FZ	
0.28	235600	1.1	5099	—	**3/V 18 ML4**	—	**BN132MB4**	—	—	—	448200	506000	200000	422
0.28	224200	1.8	5164	—	**3/V 19 L4**	—	**BN132MB4**	—	—	—	545500	600600	200000	432
0.29	221700	2.5	5040	—	**3/V 21 L4**	—	**BN132MB4**	—	—	—	769000	915300	1200000	442
0.32	188200	1.1	4449	—	**3/V 17 ML4**	—	**BN132MB4**	—	—	—	442000	470000	150000	413
0.32	210900	1.6	4457	—	**3/V 19 L4**	—	**BN132MB4**	—	—	—	534200	588100	200000	432
0.32	212800	2.6	4550	—	**3/V 21 L4**	—	**BN132MB4**	—	—	—	757800	902100	1200000	442
0.33	202700	1.5	4386	—	**3/V 18 ML4**	—	**BN132MB4**	—	—	—	438600	495300	200000	422
0.35	190800	0.9	4129	—	**3/V 17 ML4**	—	**BN132MB4**	—	—	—	442000	470000	150000	413
0.35	189200	2.0	4095	—	**3/V 19 L4**	—	**BN132MB4**	—	—	—	527700	581100	200000	432
0.38	176800	2.6	3780	—	**3/V 21 L4**	—	**BN132MB4**	—	—	—	738000	878500	1200000	442
0.39	170800	1.7	3696	—	**3/V 18 ML4**	—	**BN132MB4**	—	—	—	428000	483300	200000	422
0.41	161500	1.8	3495	—	**3/V 18 ML4**	—	**BN132MB4**	—	—	—	424600	479400	200000	422
0.45	146400	1.3	3168	—	**3/V 17 ML4**	—	**BN132MB4**	—	—	—	440100	467600	150000	413
0.45	152900	2.3	3231	—	**3/V 19 L4**	—	**BN132MB4**	—	—	—	510200	561700	200000	432
0.49	136100	2.0	2945	—	**3/V 18 ML4**	—	**BN132MB4**	—	—	—	414400	467900	200000	422
0.50	128300	0.9	2880	—	**3/V 16 ML4**	—	**BN132MB4**	—	—	—	279000	313000	150000	403
0.52	120400	1.4	2773	—	**3/V 17 ML4**	—	**BN132MB4**	—	—	—	431800	458800	150000	413
0.54	119300	0.9	2678	—	**3/V 16 ML4**	—	**BN132MB4**	—	—	—	276200	309800	150000	403
0.56	122200	3.0	2582	—	**3/V 19 L4**	—	**BN132MB4**	—	—	—	494100	544000	200000	432
0.58	116600	2.6	2464	—	**3/V 18 ML4**	—	**BN132MB4**	—	—	—	403900	456100	200000	422
0.61	109600	1.2	2343	—	**3/V 16 ML4**	—	**BN132MB4**	—	—	—	270900	303900	150000	403
0.63	106000	2.0	2295	—	**3/V 18 ML4**	—	**BN132MB4**	—	—	—	399900	451500	200000	422
0.72	83500	1.1	1994	—	**3/V 15 ML3**	—	**BN132MB4**	—	—	—	173000	207500	90000	390
0.75	89800	1.3	1920	—	**3/V 16 ML4**	—	**BN132MB4**	—	—	—	263300	295400	150000	403
0.81	83500	1.3	1785	—	**3/V 16 ML4**	—	**BN132MB4**	—	—	—	260600	292400	150000	403
0.87	72500	1.0	1662	—	**3/V 14 ML3**	—	**BN132MB4**	—	—	—	168600	202200	90000	378
0.87	72500	1.3	1662	—	**3/V 15 ML3**	—	**BN132MB4**	—	—	—	168600	202200	90000	390
0.91	69300	1.6	1589	—	**3/V 16 ML3**	—	**BN132MB4**	—	—	—	256300	287500	150000	402
1.0	61900	0.9	1418	—	**3/V 13 ML3**	—	**BN132MB4**	—	—	—	177300	207700	78500	366
1.0	61100	1.4	1400	—	**3/V 15 ML3**	—	**BN132MB4**	—	—	—	164500	197300	88000	390
1.1	57800	1.1	1324	—	**3/V 14 ML3**	—	**BN132MB4**	—	—	—	163200	195700	86300	378
1.1	59500	1.5	1329	—	**3/V 15 ML3**	—	**BN132MB4**	—	—	—	163300	195800	86400	390
1.1	57800	1.9	1324	—	**3/V 16 ML3**	—	**BN132MB4**	—	—	—	249700	280100	143900	402
1.1	61900	2.5	1365	—	**3/V 17 ML3**	—	**BN132MB4**	—	—	—	390300	414600	145400	412
1.2	58600	2.5	1215	—	**3/V 17 ML3**	—	**BN132MB4**	—	—	—	383800	407800	139800	412
1.3	49400	0.9	1103	—	**3/V 11 ML3**	—	**BN132MB4**	—	—	—	118000	120400	58700	354
1.3	47500	1.1	1088	—	**3/V 13 ML3**	—	**BN132MB4**	—	—	—	170700	200000	71900	366
1.3	48700	1.1	1116	—	**3/V 14 ML3**	—	**BN132MB4**	—	—	—	159200	191000	81500	378
1.3	50100	1.8	1120	—	**3/V 15 ML3**	—	**BN132MB4**	—	—	—	159300	191100	81600	390
1.3	51400	2.5	1134	—	**3/V 17 ML3**	—	**BN132MB4**	—	—	—	380100	403800	136600	412
1.4	48100	1.1	1009	—	**3/V 13 ML3**	—	**BN132MB4**	—	—	—	168900	197900	70100	366
1.4	47500	1.3	997	—	**3/V 14 ML3**	—	**BN132MB4**	—	—	—	156700	187900	78500	378
1.4	47500	1.9	997	—	**3/V 15 ML3**	—	**BN132MB4**	—	—	—	156700	187900	78500	390
1.4	48000	2.4	1059	—	**3/V 16 ML3**	—	**BN132MB4**	—	—	—	241900	271300	133600	402

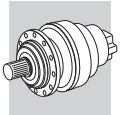

A

P_1 = 9.2 kW

n_2 min^{-1}	M_{n2} Nm	f_S	i	Pt kW					Rn_2 [N] MC/PC	MZ/PZ	HC	HZ	FZ	
1.4	49400	2.6	1024	—	**3/V 17 ML3**	**—**	**BN132MB4**	**—**	—	—	374500	397900	132100	412
1.6	39300	1.1	900	—	**3/V 11 ML3**	**—**	**BN132MB4**	**—**	—	—	114700	117000	54800	354
1.6	40000	1.4	893	—	**3/V 14 ML3**	**—**	**BN132MB4**	**—**	—	—	154200	185000	75700	378
1.6	40500	2.5	893	—	**3/V 16 ML3**	**—**	**BN132MB4**	**—**	—	—	236000	264800	126200	402
1.7	39400	1.1	827	—	**3/V 11 ML3**	**—**	**BN132MB4**	**—**	—	—	113300	115600	53300	354
1.7	38900	1.4	870	—	**3/V 13 ML3**	**—**	**BN132MB4**	**—**	—	—	165300	193700	66700	366
1.7	40000	2.0	840	—	**3/V 15 ML3**	**—**	**BN132MB4**	**—**	—	—	152900	183400	74200	390
1.7	41000	2.6	851	—	**3/V 17 ML3**	**—**	**BN132MB4**	**—**	—	—	364700	387500	124200	412
1.8	37800	1.3	794	—	**3/V 14 ML3**	**—**	**BN132MB4**	**—**	—	—	151700	181900	72800	378
1.8	38300	2.6	794	—	**3/V 16 ML3**	**—**	**BN132MB4**	**—**	—	—	232200	260400	121400	402
1.9	33200	1.4	741	—	**3/V 13 ML3**	**—**	**BN132MB4**	**—**	—	—	161600	189300	63200	366
2.0	32200	1.3	720	—	**3/V 11 ML3**	**—**	**BN132MB4**	**—**	—	—	111100	113300	50900	354
2.1	31100	1.4	695	—	**3/V 14 ML3**	**—**	**BN132MB4**	**—**	—	—	148800	178500	69700	378
2.2	30700	1.3	644	—	**3/V 11 ML3**	**—**	**BN132MB4**	**—**	—	—	109300	111500	49000	354
2.2	32400	2.6	665	—	**3/V 15 ML3**	**—**	**BN132MB4**	**—**	—	—	147900	177300	68600	390
2.2	32300	2.6	669	—	**3/V 16 ML3**	**—**	**BN132MB4**	**—**	—	—	226500	254100	114600	402
2.6	27000	0.9	560	—	**3/V 10 ML3**	**—**	**BN132MB4**	**—**	—	—	85300	108100	46800	342
2.6	27300	3.0	560	—	**3/V 15 ML3**	**—**	**BN132MB4**	**—**	—	—	144300	173100	64800	390
2.8	24400	1.0	507	—	**3/V 10 ML3**	**—**	**BN132MB4**	**—**	—	—	84100	106600	45300	342
3.2	21800	3.0	446	—	**3/V 15 ML3**	**—**	**BN132MB4**	**—**	—	—	139700	167500	60100	390
3.3	21000	1.3	436	—	**3/V 10 ML3**	**—**	**BN132MB4**	**—**	—	—	82300	104300	43100	342
8.0	10000	1.1	180	—	**—**	**3/A 07 L2**	**BN132MB4**	**—**	30000	37500	67500	88800	22200	319
9.3	8620	1.0	155	—	**—**	**3/A 07 L2**	**BN132MB4**	**—**	30000	37500	67500	88800	21100	319
10.2	7840	1.0	141	—	**—**	**3/A 06 L2**	**BN132MB4**	**—**	24500	27900	55900	64600	15900	307
10.3	7790	1.4	140	—	**—**	**3/A 07 L2**	**BN132MB4**	**—**	29300	36700	66200	87000	20400	319
11.1	7230	1.5	130	—	**—**	**3/A 07 L2**	**BN132MB4**	**—**	28600	35700	64600	85000	19900	319
12.9	6230	1.0	112	—	**—**	**3/A 06 L2**	**BN132MB4**	**—**	22700	25900	52200	60300	14700	307
13.2	6060	1.5	109	—	**—**	**3/A 07 L2**	**BN132MB4**	**—**	26900	33700	61300	80600	18800	319
14.6	5580	1.0	98.3	—	**—**	**3/A 06 L2**	**BN132MB4**	**—**	21700	24800	50200	58000	14100	307
16.3	5030	1.2	88.5	—	**—**	**3/A 06 L2**	**BN132MB4**	**—**	21000	23900	48700	56200	13600	307
16.4	4980	2.0	87.7	—	**—**	**3/A 07 L2**	**BN132MB4**	**—**	25100	31400	57500	75600	17500	319
17.7	4610	1.4	81.2	—	**—**	**3/A 06 L2**	**BN132MB4**	**—**	20400	23200	47400	54700	13200	307
20.6	3970	1.4	69.9	—	**—**	**3/A 06 L2**	**BN132MB4**	**—**	19400	22100	45300	52300	12600	307
21.1	3880	2.0	68.3	—	**—**	**3/A 07 L2**	**BN132MB4**	**—**	23100	28900	53300	70100	16100	319
23.0	3560	0.9	62.6	—	**—**	**3/A 05 L2**	**BN132MB4**	**—**	15700	17900	31200	36900	8330	295
24.0	3410	1.8	60.1	—	**—**	**3/A 06 L2**	**BN132MB4**	**—**	18400	21000	43300	50000	12000	307
25.1	3250	2.0	57.3	—	**—**	**3/A 07 L2**	**BN132MB4**	**—**	21800	27200	50600	66500	15200	319
25.3	3240	1.0	57.0	—	**—**	**3/A 05 L2**	**BN132MB4**	**—**	15200	17400	30300	35900	8070	295
25.9	3160	1.4	55.7	—	**—**	**3/A 06 L2**	**BN132MB4**	**—**	18000	20500	42300	48900	11700	307
27.0	3030	1.0	53.3	—	**—**	**3/A 05 L2**	**BN132MB4**	**—**	14900	17000	29700	35200	7890	295
27.9	2940	1.8	51.7	—	**—**	**3/A 06 L2**	**BN132MB4**	**—**	17500	20000	41400	47800	11400	307
29.3	2790	3.0	49.2	—	**—**	**3/A 07 L2**	**BN132MB4**	**—**	20700	25900	48300	63600	14400	319
31	2680	1.4	47.2	—	**—**	**3/A 06 L2**	**BN132MB4**	**—**	17000	19400	40300	46500	11000	307
33	2520	1.1	44.3	—	**—**	**3/A 04 L2**	**BN132MB4**	**—**	14000	16000	28100	33300	7420	283
33	2500	1.3	44.0	—	**—**	**3/A 05 L2**	**BN132MB4**	**—**	14000	15900	28000	33200	7400	295
35	2330	2.1	41.1	—	**—**	**3/A 06 L2**	**BN132MB4**	**—**	16200	18500	38600	44600	10500	307
37	2220	1.0	39.1	—	**—**	**3/A 04 L2**	**BN132MB4**	**—**	13400	15300	27100	32100	7120	283
37	2220	1.4	39.0	—	**—**	**3/A 05 L2**	**BN132MB4**	**—**	13400	15300	27000	32000	7110	295
41	2010	1.1	35.3	—	**—**	**3/A 04 L2**	**BN132MB4**	**—**	13000	14800	26200	31100	6880	283
41	1980	1.8	34.9	—	**—**	**3/A 06 L2**	**BN132MB4**	**—**	15400	17500	36800	42500	9990	307
44	1860	2.1	32.7	—	**—**	**3/A 06 L2**	**BN132MB4**	**—**	15000	17200	36100	41700	9780	307
45	1830	1.8	32.2	—	**—**	**3/A 05 L2**	**BN132MB4**	**—**	12600	14400	25500	30300	6670	295
48	1720	1.3	30.2	—	**—**	**3/A 04 L2**	**BN132MB4**	**—**	12300	14100	25000	29700	6530	283
52	1570	1.8	27.7	—	**—**	**3/A 04 L2**	**BN132MB4**	**—**	12000	13700	24400	28900	6350	283
52	1570	1.8	27.7	—	**—**	**3/A 05 L2**	**BN132MB4**	**—**	12000	13700	24400	28900	6350	295
52	1570	2.1	27.7	—	**—**	**3/A 06 L2**	**BN132MB4**	**—**	14200	16200	34300	39600	9250	307
56	1450	1.3	25.6	—	**—**	**3/A 04 L2**	**BN132MB4**	**—**	11600	13300	23800	28200	6180	283
65	1260	1.8	22.1	—	**—**	**3/A 04 L2**	**BN132MB4**	**—**	11100	12700	22800	27000	5880	283
65	1260	1.8	22.1	—	**—**	**3/A 05 L2**	**BN132MB4**	**—**	11100	12700	22800	27000	5880	295
77	1060	1.8	18.7	—	**—**	**3/A 04 L2**	**BN132MB4**	**—**	10500	12000	21700	25700	5570	283
77	1060	1.8	18.7	—	**—**	**3/A 05 L2**	**BN132MB4**	**—**	10500	12000	21700	25700	5570	295

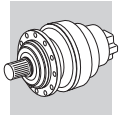

P_1 = 11 kW

n_2 min^{-1}	M_{n2} Nm	f_S	i	Pt kW					Rn_2 [N] MC/PC	MZ/PZ	HC	HZ	FZ	
0.28	282000	0.9	5099	—	**3/V 18 ML4**	—	**BN160MR4**	—	—	—	448200	506000	200000	422
0.28	268400	1.5	5164	—	**3/V 19 L4**	—	**BN160MR4**	—	—	—	545500	600600	200000	432
0.29	265300	2.1	5040	—	**3/V 21 L4**	—	**BN160MR4**	—	—	—	769000	915300	1200000	442
0.32	252400	1.3	4457	—	**3/V 19 L4**	—	**BN160MR4**	—	—	—	534200	588100	200000	432
0.32	254600	2.2	4550	—	**3/V 21 L4**	—	**BN160MR4**	—	—	—	757800	902100	1200000	442
0.33	242500	1.2	4386	—	**3/V 18 ML4**	—	**BN160MR4**	—	—	—	438600	495300	200000	422
0.35	226400	1.7	4095	—	**3/V 19 L4**	—	**BN160MR4**	—	—	—	527700	581100	200000	432
0.38	211500	2.2	3780	—	**3/V 21 L4**	—	**BN160MR4**	—	—	—	738000	878500	1200000	442
0.39	204400	1.5	3696	—	**3/V 18 ML4**	—	**BN160MR4**	—	—	—	428000	483300	200000	422
0.40	206300	2.6	3600	—	**3/V 21 L4**	—	**BN160MR4**	—	—	—	732900	872400	1200000	442
0.41	193300	1.5	3495	—	**3/V 18 ML4**	—	**BN160MR4**	—	—	—	424600	479400	200000	422
0.45	175200	1.1	3168	—	**3/V 17 ML4**	—	**BN160MR4**	—	—	—	440100	467600	150000	413
0.45	183000	1.9	3231	—	**3/V 19 L4**	—	**BN160MR4**	—	—	—	510200	561700	200000	432
0.49	162900	1.7	2945	—	**3/V 18 ML4**	—	**BN160MR4**	—	—	—	414400	467900	200000	422
0.52	144100	1.2	2773	—	**3/V 17 ML4**	—	**BN160MR4**	—	—	—	431800	458800	150000	413
0.56	146200	2.5	2582	—	**3/V 19 L4**	—	**BN160MR4**	—	—	—	494100	544000	200000	432
0.58	139500	2.1	2464	—	**3/V 18 ML4**	—	**BN160MR4**	—	—	—	403900	456100	200000	422
0.61	131100	1.0	2343	—	**3/V 16 ML4**	—	**BN160MR4**	—	—	—	270900	303900	150000	403
0.63	126900	1.7	2295	—	**3/V 18 ML4**	—	**BN160MR4**	—	—	—	399900	451500	200000	422
0.70	121100	1.5	2065	—	**3/V 17 ML4**	—	**BN160MR4**	—	—	—	414000	439800	150000	413
0.72	100000	0.9	1994	—	**3/V 15 ML3**	—	**BN160MR4**	—	—	—	173000	207500	90000	390
0.75	107500	1.1	1920	—	**3/V 16 ML4**	—	**BN160MR4**	—	—	—	263300	295400	150000	403
0.78	108300	2.7	1848	—	**3/V 18 ML4**	—	**BN160MR4**	—	—	—	387700	437700	200000	422
0.81	99900	1.1	1785	—	**3/V 16 ML4**	—	**BN160MR4**	—	—	—	260600	292400	150000	403
0.81	100800	1.8	1780	—	**3/V 17 ML4**	—	**BN160MR4**	—	—	—	405300	430600	150000	413
0.82	102500	2.9	1748	—	**3/V 18 ML4**	—	**BN160MR4**	—	—	—	384600	434200	200000	422
0.87	86800	1.1	1662	—	**3/V 15 ML3**	—	**BN160MR4**	—	—	—	168600	202200	90000	390
0.91	82900	1.4	1589	—	**3/V 16 ML3**	—	**BN160MR4**	—	—	—	256300	287500	150000	402
0.98	86400	3.0	1473	—	**3/V 18 ML4**	—	**BN160MR4**	—	—	—	375300	423800	198800	422
1.0	73100	1.2	1400	—	**3/V 15 ML3**	—	**BN160MR4**	—	—	—	164500	197300	88000	390
1.1	71200	1.3	1329	—	**3/V 15 ML3**	—	**BN160MR4**	—	—	—	163300	195800	86400	390
1.1	69100	1.6	1324	—	**3/V 16 ML3**	—	**BN160MR4**	—	—	—	249700	280100	143900	402
1.1	74100	2.1	1365	—	**3/V 17 ML3**	—	**BN160MR4**	—	—	—	390300	414600	145400	412
1.2	70100	2.1	1215	—	**3/V 17 ML3**	—	**BN160MR4**	—	—	—	383800	407800	139800	412
1.3	60000	1.5	1120	—	**3/V 15 ML3**	—	**BN160MR4**	—	—	—	159300	191100	81600	390
1.3	61500	2.1	1134	—	**3/V 17 ML3**	—	**BN160MR4**	—	—	—	380100	403800	136600	412
1.4	57500	0.9	1009	—	**3/V 13 ML3**	—	**BN160MR4**	—	—	—	168900	197900	70100	366
1.4	56800	1.1	997	—	**3/V 14 ML3**	—	**BN160MR4**	—	—	—	156700	187900	78500	378
1.4	56800	1.6	997	—	**3/V 15 ML3**	—	**BN160MR4**	—	—	—	156700	187900	78500	390
1.4	57500	2.0	1059	—	**3/V 16 ML3**	—	**BN160MR4**	—	—	—	241900	271300	133600	402
1.4	59100	2.2	1024	—	**3/V 17 ML3**	—	**BN160MR4**	—	—	—	374500	397900	132100	412
1.6	47800	1.2	893	—	**3/V 14 ML3**	—	**BN160MR4**	—	—	—	154200	185000	75700	378
1.6	48500	2.1	893	—	**3/V 16 ML3**	—	**BN160MR4**	—	—	—	236000	264800	126200	402
1.7	47100	0.9	827	—	**3/V 11 ML3**	—	**BN160MR4**	—	—	—	113300	115600	53300	354
1.7	46600	1.2	870	—	**3/V 13 ML3**	—	**BN160MR4**	—	—	—	165300	193700	66700	366
1.7	47900	1.7	840	—	**3/V 15 ML3**	—	**BN160MR4**	—	—	—	152900	183400	74200	390
1.7	49100	2.2	851	—	**3/V 17 ML3**	—	**BN160MR4**	—	—	—	364700	387500	124200	412
1.8	45300	1.1	794	—	**3/V 14 ML3**	—	**BN160MR4**	—	—	—	151700	181900	72800	378
1.8	45800	2.2	794	—	**3/V 16 ML3**	—	**BN160MR4**	—	—	—	232200	260400	121400	402
1.8	47800	2.8	810	—	**3/V 17 ML3**	—	**BN160MR4**	—	—	—	362200	384800	122100	412
1.9	39700	1.2	741	—	**3/V 13 ML3**	—	**BN160MR4**	—	—	—	161600	189300	63200	366
2.0	38600	1.1	720	—	**3/V 11 ML3**	—	**BN160MR4**	—	—	—	111100	113300	50900	354
2.1	39300	1.3	673	—	**3/V 13 ML3**	—	**BN160MR4**	—	—	—	159400	186800	61200	366
2.1	37200	1.2	695	—	**3/V 14 ML3**	—	**BN160MR4**	—	—	—	148800	178500	69700	378
2.2	36700	1.1	644	—	**3/V 11 ML3**	—	**BN160MR4**	—	—	—	109300	111500	49000	354
2.2	38800	1.8	665	—	**3/V 14 ML3**	—	**BN160MR4**	—	—	—	147900	177300	68600	378
2.2	38800	2.2	665	—	**3/V 15 ML3**	—	**BN160MR4**	—	—	—	147900	177300	68600	390

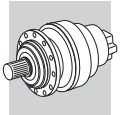

A

P_1 = 11 kW

n_2 min^{-1}	M_{n2} Nm	f_S	i	Pt kW					Rn_2 [N] MC/PC	MZ/PZ	HC	HZ	FZ	
2.2	38600	2.2	669	—	**3/V 16 ML3**	**—**	**BN160MR4**	**—**	—	—	226500	254100	114600	402
2.5	33100	1.5	567	—	**3/V 13 ML3**	**—**	**BN160MR4**	**—**	—	—	155500	182200	57800	366
2.5	35000	1.5	579	—	**3/V 14 ML3**	**—**	**BN160MR4**	**—**	—	—	145000	173900	65500	378
2.6	32200	1.3	551	—	**3/V 11 ML3**	**—**	**BN160MR4**	**—**	—	—	106900	109100	46600	354
2.6	32700	2.5	560	—	**3/V 15 ML3**	**—**	**BN160MR4**	**—**	—	—	144300	173100	64800	390
2.8	29800	1.1	510	—	**3/V 11 ML3**	**—**	**BN160MR4**	**—**	—	—	105700	107900	45400	354
2.8	30100	1.6	516	—	**3/V 13 ML3**	**—**	**BN160MR4**	**—**	—	—	153500	179800	56100	366
2.9	30100	1.9	498	—	**3/V 14 ML3**	**—**	**BN160MR4**	**—**	—	—	141900	170200	62300	378
2.9	30100	2.7	498	—	**3/V 15 ML3**	**—**	**BN160MR4**	**—**	—	—	141900	170200	62300	390
3.2	26000	1.8	446	—	**3/V 14 ML3**	**—**	**BN160MR4**	**—**	—	—	139700	167500	60100	378
3.2	26000	2.5	446	—	**3/V 15 ML3**	**—**	**BN160MR4**	**—**	—	—	139700	167500	60100	390
3.3	25200	1.1	436	—	**3/V 10 ML3**	**—**	**BN160MR4**	**—**	—	—	82300	104300	43100	342
3.3	25100	1.6	430	—	**3/V 11 ML3**	**—**	**BN160MR4**	**—**	—	—	103200	105300	42800	354
3.4	25700	1.8	425	—	**3/V 13 ML3**	**—**	**BN160MR4**	**—**	—	—	149300	174900	52600	366
3.6	24000	1.9	397	—	**3/V 14 ML3**	**—**	**BN160MR4**	**—**	—	—	137400	164800	57800	378
3.7	23600	2.7	386	—	**3/V 15 ML3**	**—**	**BN160MR4**	**—**	—	—	136900	164100	57300	390
3.9	21600	1.8	370	—	**3/V 13 ML3**	**—**	**BN160MR4**	**—**	—	—	146300	171500	50200	366
8.0	12000	0.9	180	—	**—**	**3/A 07 L2**	**BN160MR4**	**—**	30000	37500	67500	88800	22200	319
10.3	9320	1.2	140	—	**—**	**3/A 07 L2**	**BN160MR4**	**—**	29300	36700	66200	87000	20400	319
11.1	8650	1.3	130	—	**—**	**3/A 07 L2**	**BN160MR4**	**—**	28600	35700	64600	85000	19900	319
13.2	7260	1.2	109	—	**—**	**3/A 07 L2**	**BN160MR4**	**—**	26900	33700	61300	80600	18800	319
16.3	6020	1.0	88.5	—	**—**	**3/A 06 L2**	**BN160MR4**	**—**	21000	23900	48700	56200	13600	307
16.4	5960	1.7	87.7	—	**—**	**3/A 07 L2**	**BN160MR4**	**—**	25100	31400	57500	75600	17500	319
17.7	5520	1.2	81.2	—	**—**	**3/A 06 L2**	**BN160MR4**	**—**	20400	23200	47400	54700	13200	307
20.6	4750	1.2	69.9	—	**—**	**3/A 06 L2**	**BN160MR4**	**—**	19400	22100	45300	52300	12600	307
21.1	4640	1.7	68.3	—	**—**	**3/A 07 L2**	**BN160MR4**	**—**	23100	28900	53300	70100	16100	319
24.0	4090	1.5	60.1	—	**—**	**3/A 06 L2**	**BN160MR4**	**—**	18400	21000	43300	50000	12000	307
25.1	3900	1.7	57.3	—	**—**	**3/A 07 L2**	**BN160MR4**	**—**	21800	27200	50600	66500	15200	319
25.9	3790	1.2	55.7	—	**—**	**3/A 06 L2**	**BN160MR4**	**—**	18000	20500	42300	48900	11700	307
27.9	3510	1.5	51.7	—	**—**	**3/A 06 L2**	**BN160MR4**	**—**	17500	20000	41400	47800	11400	307
29.3	3340	2.5	49.2	—	**—**	**3/A 07 L2**	**BN160MR4**	**—**	20700	25900	48300	63600	14400	319
31	3210	1.2	47.2	—	**—**	**3/A 06 L2**	**BN160MR4**	**—**	17000	19400	40300	46500	11000	307
35	2790	1.8	41.1	—	**—**	**3/A 06 L2**	**BN160MR4**	**—**	16200	18500	38600	44600	10500	307
41	2370	1.5	34.9	—	**—**	**3/A 06 L2**	**BN160MR4**	**—**	15400	17500	36800	42500	9990	307
44	2220	1.8	32.7	—	**—**	**3/A 06 L2**	**BN160MR4**	**—**	15000	17200	36100	41700	9780	307
52	1880	1.8	27.7	—	**—**	**3/A 06 L2**	**BN160MR4**	**—**	14200	16200	34300	39600	9250	307

P_1 = 15 kW

n_2 min^{-1}	M_{n2} Nm	f_S	i	Pt kW					Rn_2 [N] MC/PC	MZ/PZ	HC	HZ	FZ	
0.28	360300	1.1	5164	—	**3/V 19 L4**	**—**	**BN160L4**	**—**	—	—	545500	600600	200000	432
0.29	356100	1.6	5040	—	**3/V 21 L4**	**—**	**BN160L4**	**—**	—	—	769000	915300	1200000	442
0.32	341800	1.6	4550	—	**3/V 21 L4**	**—**	**BN160L4**	**—**	—	—	757800	902100	1200000	442
0.33	325600	0.9	4386	—	**3/V 18 ML4**	**—**	**BN160L4**	**—**	—	—	438600	495300	200000	422
0.33	338800	1.0	4457	—	**3/V 19 L4**	**—**	**BN160L4**	**—**	—	—	534200	588100	200000	432
0.36	304000	1.3	4095	—	**3/V 19 L4**	**—**	**BN160L4**	**—**	—	—	527700	581100	200000	432
0.39	284000	1.6	3780	—	**3/V 21 L4**	**—**	**BN160L4**	**—**	—	—	738000	878500	1200000	442
0.40	274400	1.1	3696	—	**3/V 18 ML4**	**—**	**BN160L4**	**—**	—	—	428000	483300	200000	422
0.41	276900	1.9	3600	—	**3/V 21 L4**	**—**	**BN160L4**	**—**	—	—	732900	872400	1200000	442
0.42	259500	1.1	3495	—	**3/V 18 ML4**	**—**	**BN160L4**	**—**	—	—	424600	479400	200000	422
0.45	245600	1.5	3231	—	**3/V 19 L4**	**—**	**BN160L4**	**—**	—	—	510200	561700	200000	432
0.50	218600	1.3	2945	—	**3/V 18 ML4**	**—**	**BN160L4**	**—**	—	—	414400	467900	200000	422
0.54	212500	2.5	2700	—	**3/V 21 L4**	**—**	**BN160L4**	**—**	—	—	703400	837300	1200000	442
0.57	196300	1.9	2582	—	**3/V 19 L4**	**—**	**BN160L4**	**—**	—	—	494100	544000	200000	432
0.58	193800	2.6	2520	—	**3/V 21 L4**	**—**	**BN160L4**	**—**	—	—	696500	829000	1200000	442

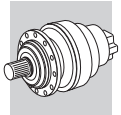

P_1 = 15 kW

n_2 min^{-1}	M_{n2} Nm	f_S	i	Pt kW					Rn_2 [N] MC/PC	MZ/PZ	HC	HZ	FZ	
0.59	187300	1.6	2464	—	**3/V 18 ML4**	**—**	**BN160L4**	**—**	—	—	403900	456100	200000	422
0.64	170400	1.2	2295	—	**3/V 18 ML4**	**—**	**BN160L4**	**—**	—	—	399900	451500	200000	422
0.71	162500	1.1	2065	—	**3/V 17 ML4**	**—**	**BN160L4**	**—**	—	—	414000	439800	150000	413
0.79	145500	2.0	1848	—	**3/V 18 ML4**	**—**	**BN160L4**	**—**	—	—	387700	437700	200000	422
0.82	135300	1.4	1780	—	**3/V 17 ML4**	**—**	**BN160L4**	**—**	—	—	405300	430600	150000	413
0.84	137600	2.2	1748	—	**3/V 18 ML4**	**—**	**BN160L4**	**—**	—	—	384600	434200	200000	422
0.92	111400	1.0	1589	—	**3/V 16 ML3**	**—**	**BN160L4**	**—**	—	—	256300	287500	150000	402
0.99	115900	2.2	1473	—	**3/V 18 ML4**	**—**	**BN160L4**	**—**	—	—	375300	423800	198800	422
1.1	95600	0.9	1329	—	**3/V 15 ML3**	**—**	**BN160L4**	**—**	—	—	163300	195800	86400	390
1.1	92800	1.2	1324	—	**3/V 16 ML3**	**—**	**BN160L4**	**—**	—	—	249700	280100	143900	402
1.1	99400	1.5	1365	—	**3/V 17 ML3**	**—**	**BN160L4**	**—**	—	—	390300	414600	145400	412
1.2	94100	1.5	1215	—	**3/V 17 ML3**	**—**	**BN160L4**	**—**	—	—	383800	407800	139800	412
1.2	98100	2.9	1232	—	**3/V 18 ML4**	**—**	**BN160L4**	**—**	—	—	365900	413100	187300	422
1.3	80600	1.1	1120	—	**3/V 15 ML3**	**—**	**BN160L4**	**—**	—	—	159300	191100	81600	390
1.3	82600	1.5	1134	—	**3/V 17 ML3**	**—**	**BN160L4**	**—**	—	—	380100	403800	136600	412
1.4	77100	1.5	1059	—	**3/V 16 ML3**	**—**	**BN160L4**	**—**	—	—	241900	271300	133600	402
1.4	79300	1.6	1024	—	**3/V 17 ML3**	**—**	**BN160L4**	**—**	—	—	374500	397900	132100	412
1.5	76300	1.2	997	—	**3/V 15 ML3**	**—**	**BN160L4**	**—**	—	—	156700	187900	78500	390
1.6	65100	1.5	893	—	**3/V 16 ML3**	**—**	**BN160L4**	**—**	—	—	236000	264800	126200	402
1.7	64300	1.3	840	—	**3/V 15 ML3**	**—**	**BN160L4**	**—**	—	—	152900	183400	74200	390
1.7	65900	1.6	851	—	**3/V 17 ML3**	**—**	**BN160L4**	**—**	—	—	364700	387500	124200	412
1.8	61500	1.6	794	—	**3/V 16 ML3**	**—**	**BN160L4**	**—**	—	—	232200	260400	121400	402
1.8	64200	2.1	810	—	**3/V 17 ML3**	**—**	**BN160L4**	**—**	—	—	362200	384800	122100	412
2.1	54200	2.6	683	—	**3/V 17 ML3**	**—**	**BN160L4**	**—**	—	—	353500	375500	115400	412
2.2	52700	0.9	673	—	**3/V 13 ML3**	**—**	**BN160L4**	**—**	—	—	159400	186800	61200	366
2.2	52100	1.3	665	—	**3/V 14 ML3**	**—**	**BN160L4**	**—**	—	—	147900	177300	68600	378
2.2	52100	1.6	665	—	**3/V 15 ML3**	**—**	**BN160L4**	**—**	—	—	147900	177300	68600	390
2.2	51800	1.6	669	—	**3/V 16 ML3**	**—**	**BN160L4**	**—**	—	—	226500	254100	114600	402
2.4	49300	2.6	608	—	**3/V 17 ML3**	**—**	**BN160L4**	**—**	—	—	347600	369300	111000	412
2.5	47000	1.1	579	—	**3/V 14 ML3**	**—**	**BN160L4**	**—**	—	—	145000	173900	65500	378
2.6	43200	0.9	551	—	**3/V 11 ML3**	**—**	**BN160L4**	**—**	—	—	106900	109100	46600	354
2.6	44400	1.1	567	—	**3/V 13 ML3**	**—**	**BN160L4**	**—**	—	—	155500	182200	57800	366
2.6	43900	1.9	560	—	**3/V 15 ML3**	**—**	**BN160L4**	**—**	—	—	144300	173100	64800	390
2.6	45000	2.6	567	—	**3/V 17 ML3**	**—**	**BN160L4**	**—**	—	—	344200	365700	108500	412
2.8	40400	1.2	516	—	**3/V 13 ML3**	**—**	**BN160L4**	**—**	—	—	153500	179800	56100	366
2.8	42000	2.6	530	—	**3/V 16 ML3**	**—**	**BN160L4**	**—**	—	—	219100	245800	106000	402
2.9	40400	1.4	498	—	**3/V 14 ML3**	**—**	**BN160L4**	**—**	—	—	141900	170200	62300	378
2.9	40400	2.0	498	—	**3/V 15 ML3**	**—**	**BN160L4**	**—**	—	—	141900	170200	62300	390
3.3	35000	1.4	446	—	**3/V 14 ML3**	**—**	**BN160L4**	**—**	—	—	139700	167500	60100	378
3.3	35000	1.9	446	—	**3/V 15 ML3**	**—**	**BN160L4**	**—**	—	—	139700	167500	60100	390
3.3	35400	2.6	446	—	**3/V 16 ML3**	**—**	**BN160L4**	**—**	—	—	213800	239800	100100	402
3.4	33700	1.2	430	—	**3/V 11 ML3**	**—**	**BN160L4**	**—**	—	—	103200	105300	42800	354
3.4	34500	1.3	425	—	**3/V 13 ML3**	**—**	**BN160L4**	**—**	—	—	149300	174900	52600	366
3.7	32200	1.4	397	—	**3/V 14 ML3**	**—**	**BN160L4**	**—**	—	—	137400	164800	57800	378
3.8	31700	2.0	386	—	**3/V 15 ML3**	**—**	**BN160L4**	**—**	—	—	136900	164100	57300	390
3.9	29000	1.4	370	—	**3/V 13 ML3**	**—**	**BN160L4**	**—**	—	—	146300	171500	50200	366
11.2	11600	1.0	130	—	**—**	**3/A 07 L2**	**BN160L4**	**—**	28600	35700	64600	85000	19900	319
13.4	9740	0.9	109	—	**—**	**3/A 07 L2**	**BN160L4**	**—**	26900	33700	61300	80600	18800	319
16.6	8000	1.3	87.7	—	**—**	**3/A 07 L2**	**BN160L4**	**—**	25100	31400	57500	75600	17500	319
21.4	6230	1.3	68.3	—	**—**	**3/A 07 L2**	**BN160L4**	**—**	23100	28900	53300	70100	16100	319
24.3	5480	1.1	60.1	—	**—**	**3/A 06 L2**	**BN160L4**	**—**	18400	21000	43300	50000	12000	307
25.5	5230	1.3	57.3	—	**—**	**3/A 07 L2**	**BN160L4**	**—**	21800	27200	50600	66500	15200	319
28.2	4720	1.1	51.7	—	**—**	**3/A 06 L2**	**BN160L4**	**—**	17500	20000	41400	47800	11400	307
29.7	4490	1.9	49.2	—	**—**	**3/A 07 L2**	**BN160L4**	**—**	20700	25900	48300	63600	14400	319
35	3790	2.5	41.5	—	**—**	**3/A 07 L2**	**BN160L4**	**—**	19500	24400	45900	60400	13600	319
36	3750	1.3	41.1	—	**—**	**3/A 06 L2**	**BN160L4**	**—**	16200	18500	38600	44600	10500	307
42	3180	1.1	34.9	—	**—**	**3/A 06 L2**	**BN160L4**	**—**	15400	17500	36800	42500	9990	307
45	2980	1.3	32.7	—	**—**	**3/A 06 L2**	**BN160L4**	**—**	15000	17200	36100	41700	9780	307
45	2950	2.7	32.3	—	**—**	**3/A 07 L2**	**BN160L4**	**—**	18000	22500	42600	56000	12500	319
53	2530	1.3	27.7	—	**—**	**3/A 06 L2**	**BN160L4**	**—**	14200	16200	34300	39600	9250	307
54	2470	2.7	27.1	—	**—**	**3/A 07 L2**	**BN160L4**	**—**	17000	21200	40400	53100	11800	319

A

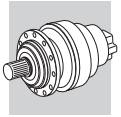

A

P_1 = 18.5 kW

n_2 min^{-1}	M_{n2} Nm	f_S	i	Pt kW					Rn_2 [N] MC/PC	MZ/PZ	HC	HZ	FZ	
0.28	444800	0.9	5164	—	**3/V 19 L4**	**—**	**BN180M4**	**M5LA4**	—	—	545500	600600	200000	432
0.29	439700	1.3	5040	—	**3/V 21 L4**	**—**	**BN180M4**	**M5LA4**	—	—	769000	915300	1200000	442
0.32	422100	1.3	4550	—	**3/V 21 L4**	**—**	**BN180M4**	**M5LA4**	—	—	757800	902100	1200000	442
0.36	375300	1.0	4095	—	**3/V 19 L4**	**—**	**BN180M4**	**M5LA4**	—	—	527700	581100	200000	432
0.39	350600	1.3	3780	—	**3/V 21 L4**	**—**	**BN180M4**	**M5LA4**	—	—	738000	878500	1200000	442
0.41	341900	1.6	3600	—	**3/V 21 L4**	**—**	**BN180M4**	**M5LA4**	—	—	732900	872400	1200000	442
0.42	320400	0.9	3495	—	**3/V 18 ML4**	**—**	**BN180M4**	**M5LA4**	—	—	424600	479400	200000	422
0.45	303300	1.2	3231	—	**3/V 19 L4**	**—**	**BN180M4**	**M5LA4**	—	—	510200	561700	200000	432
0.50	269900	1.0	2945	—	**3/V 18 ML4**	**—**	**BN180M4**	**M5LA4**	—	—	414400	467900	200000	422
0.54	262400	2.0	2700	—	**3/V 21 L4**	**—**	**BN180M4**	**M5LA4**	—	—	703400	837300	1200000	442
0.57	242400	1.5	2582	—	**3/V 19 L4**	**—**	**BN180M4**	**M5LA4**	—	—	494100	544000	200000	432
0.58	239300	2.1	2520	—	**3/V 21 L4**	**—**	**BN180M4**	**M5LA4**	—	—	696500	829000	1200000	442
0.59	231300	1.3	2464	—	**3/V 18 ML4**	**—**	**BN180M4**	**M5LA4**	—	—	403900	456100	200000	422
0.64	210400	1.0	2295	—	**3/V 18 ML4**	**—**	**BN180M4**	**M5LA4**	—	—	399900	451500	200000	422
0.64	221100	2.5	2275	—	**3/V 21 L4**	**—**	**BN180M4**	**M5LA4**	—	—	686400	817000	1200000	442
0.77	183700	2.5	1890	—	**3/V 21 L4**	**—**	**BN180M4**	**M5LA4**	—	—	668500	795700	1200000	442
0.79	179600	1.7	1848	—	**3/V 18 ML4**	**—**	**BN180M4**	**M5LA4**	—	—	387700	437700	200000	422
0.81	178900	3.0	1800	—	**3/V 21 L4**	**—**	**BN180M4**	**M5LA4**	—	—	663800	790100	1200000	442
0.82	167100	1.1	1780	—	**3/V 17 ML4**	**—**	**BN180M4**	**M5LA4**	—	—	405300	430600	150000	413
0.84	169900	1.8	1748	—	**3/V 18 ML4**	**—**	**BN180M4**	**M5LA4**	—	—	384600	434200	200000	422
0.99	143100	1.8	1473	—	**3/V 18 ML4**	**—**	**BN180M4**	**M5LA4**	—	—	375300	423800	198800	422
1.1	114600	1.0	1324	—	**3/V 16 ML3**	**—**	**BN180M4**	**M5LA4**	—	—	249700	280100	143900	402
1.1	122800	1.3	1365	—	**3/V 17 ML3**	**—**	**BN180M4**	**M5LA4**	—	—	390300	414600	145400	412
1.2	116200	1.2	1215	—	**3/V 17 ML3**	**—**	**BN180M4**	**M5LA4**	—	—	383800	407800	139800	412
1.2	121100	2.4	1232	—	**3/V 18 ML4**	**—**	**BN180M4**	**M5LA4**	—	—	365900	413100	187300	422
1.3	102000	1.3	1134	—	**3/V 17 ML3**	**—**	**BN180M4**	**M5LA4**	—	—	380100	403800	136600	412
1.3	114500	2.5	1165	—	**3/V 18 ML4**	**—**	**BN180M4**	**M5LA4**	—	—	363000	409800	183800	422
1.4	95200	1.2	1059	—	**3/V 16 ML3**	**—**	**BN180M4**	**M5LA4**	—	—	241900	271300	133600	402
1.4	97900	1.3	1024	—	**3/V 17 ML3**	**—**	**BN180M4**	**M5LA4**	—	—	374500	397900	132100	412
1.5	94200	0.9	997	—	**3/V 15 ML3**	**—**	**BN180M4**	**M5LA4**	—	—	156700	187900	78500	390
1.5	96500	2.5	982	—	**3/V 18 ML4**	**—**	**BN180M4**	**M5LA4**	—	—	354200	399900	173600	422
1.6	80300	1.3	893	—	**3/V 16 ML3**	**—**	**BN180M4**	**M5LA4**	—	—	236000	264800	126200	402
1.7	79400	1.0	840	—	**3/V 15 ML3**	**—**	**BN180M4**	**M5LA4**	—	—	152900	183400	74200	390
1.7	81400	1.3	851	—	**3/V 17 ML3**	**—**	**BN180M4**	**M5LA4**	—	—	364700	387500	124200	412
1.8	75900	1.3	794	—	**3/V 16 ML3**	**—**	**BN180M4**	**M5LA4**	—	—	232200	260400	121400	402
1.8	79300	1.7	810	—	**3/V 17 ML3**	**—**	**BN180M4**	**M5LA4**	—	—	362200	384800	122100	412
1.9	75200	2.5	765	—	**3/V 18 ML4**	**—**	**BN180M4**	**M5LA4**	—	—	341800	385900	159800	422
2.1	66900	2.1	683	—	**3/V 17 ML3**	**—**	**BN180M4**	**M5LA4**	—	—	353500	375500	115400	412
2.2	64400	1.1	665	—	**3/V 14 ML3**	**—**	**BN180M4**	**M5LA4**	—	—	147900	177300	68600	378
2.2	64400	1.3	665	—	**3/V 15 ML3**	**—**	**BN180M4**	**M5LA4**	—	—	147900	177300	68600	390
2.2	64000	1.3	669	—	**3/V 16 ML3**	**—**	**BN180M4**	**M5LA4**	—	—	226500	254100	114600	402
2.4	60900	2.1	608	—	**3/V 17 ML3**	**—**	**BN180M4**	**M5LA4**	—	—	347600	369300	111000	412
2.5	58000	0.9	579	—	**3/V 14 ML3**	**—**	**BN180M4**	**M5LA4**	—	—	145000	173900	65500	378
2.6	54200	1.5	560	—	**3/V 15 ML3**	**—**	**BN180M4**	**M5LA4**	—	—	144300	173100	64800	390
2.6	55500	2.1	567	—	**3/V 17 ML3**	**—**	**BN180M4**	**M5LA4**	—	—	344200	365700	108500	412
2.8	49900	1.0	516	—	**3/V 13 ML3**	**—**	**BN180M4**	**M5LA4**	—	—	153500	179800	56100	366
2.8	51900	2.1	530	—	**3/V 16 ML3**	**—**	**BN180M4**	**M5LA4**	—	—	219100	245800	106000	402
2.9	49900	1.2	498	—	**3/V 14 ML3**	**—**	**BN180M4**	**M5LA4**	—	—	141900	170200	62300	378
2.9	49900	1.7	498	—	**3/V 15 ML3**	**—**	**BN180M4**	**M5LA4**	—	—	141900	170200	62300	390
2.9	51300	2.5	512	—	**3/V 17 ML3**	**—**	**BN180M4**	**M5LA4**	—	—	339200	360400	104800	412
3.3	43200	1.1	446	—	**3/V 14 ML3**	**—**	**BN180M4**	**M5LA4**	—	—	139700	167500	60100	378
3.3	43200	1.5	446	—	**3/V 15 ML3**	**—**	**BN180M4**	**M5LA4**	—	—	139700	167500	60100	390
3.3	43700	2.1	446	—	**3/V 16 ML3**	**—**	**BN180M4**	**M5LA4**	—	—	213800	239800	100100	402
3.4	41600	0.9	430	—	**3/V 11 ML3**	**—**	**BN180M4**	**M5LA4**	—	—	103200	105300	42800	354
3.4	42600	1.1	425	—	**3/V 13 ML3**	**—**	**BN180M4**	**M5LA4**	—	—	149300	174900	52600	366
3.4	42600	2.5	425	—	**3/V 17 ML3**	**—**	**BN180M4**	**M5LA4**	—	—	330400	351000	98500	412
3.6	41500	2.9	405	—	**3/V 17 ML3**	**—**	**BN180M4**	**M5LA4**	—	—	328100	348500	96900	412

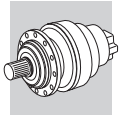

P_1 = 18.5 kW

n_2 min^{-1}	M_{n2} Nm	f_S	i	Pt kW					Rn_2 [N] MC/PC	MZ/PZ	HC	HZ	FZ	
3.7	39800	1.2	397	—	**3/V 14 ML3**	**—**	**BN180M4**	**M5LA4**	—	—	137400	164800	57800	378
3.7	39800	2.5	397	—	**3/V 16 ML3**	**—**	**BN180M4**	**M5LA4**	—	—	210300	235900	96300	402
3.8	39100	1.6	386	—	**3/V 15 ML3**	**—**	**BN180M4**	**M5LA4**	—	—	136900	164100	57300	390
3.9	35800	1.1	370	—	**3/V 13 ML3**	**—**	**BN180M4**	**M5LA4**	—	—	146300	171500	50200	366
16.6	9880	1.0	87.7	—	**—**	**3/A 07 L2**	**BN180M4**	**M5LA4**	25100	31400	57500	75600	17500	319
21.4	7700	1.0	68.3	—	**—**	**3/A 07 L2**	**BN180M4**	**M5LA4**	23100	28900	53300	70100	16100	319
25.5	6460	1.0	57.3	—	**—**	**3/A 07 L2**	**BN180M4**	**M5LA4**	21800	27200	50600	66500	15200	319
29.7	5540	1.5	49.2	—	**—**	**3/A 07 L2**	**BN180M4**	**M5LA4**	20700	25900	48300	63600	14400	319
35	4680	2.1	41.5	—	**—**	**3/A 07 L2**	**BN180M4**	**M5LA4**	19500	24400	45900	60400	13600	319
36	4630	1.1	41.1	—	**—**	**3/A 06 L2**	**BN180M4**	**M5LA4**	16200	18500	38600	44600	10500	307
45	3680	1.1	32.7	—	**—**	**3/A 06 L2**	**BN180M4**	**M5LA4**	15000	17200	36100	41700	9780	307
45	3640	2.2	32.3	—	**—**	**3/A 07 L2**	**BN180M4**	**M5LA4**	18000	22500	42600	56000	12500	319
53	3120	1.1	27.7	—	**—**	**3/A 06 L2**	**BN180M4**	**M5LA4**	14200	16200	34300	39600	9250	307
54	3050	2.2	27.1	—	**—**	**3/A 07 L2**	**BN180M4**	**M5LA4**	17000	21200	40400	53100	11800	319

P_1 = 22 kW

n_2 min^{-1}	M_{n2} Nm	f_S	i	Pt kW					Rn_2 [N] MC/PC	MZ/PZ	HC	HZ	FZ	
0.29	523300	1.1	5040	—	**3/V 21 L4**	**—**	**BN180L4**	**—**	—	—	769000	915300	1200000	442
0.32	502300	1.1	4550	—	**3/V 21 L4**	**—**	**BN180L4**	**—**	—	—	757800	902100	1200000	442
0.39	417300	1.1	3780	—	**3/V 21 L4**	**—**	**BN180L4**	**—**	—	—	738000	878500	1200000	442
0.41	406900	1.3	3600	—	**3/V 21 L4**	**—**	**BN180L4**	**—**	—	—	732900	872400	1200000	442
0.45	360900	1.0	3231	—	**3/V 19 L4**	**—**	**BN180L4**	**—**	—	—	510200	561700	200000	432
0.54	312300	1.7	2700	—	**3/V 21 L4**	**—**	**BN180L4**	**—**	—	—	703400	837300	1200000	442
0.57	288400	1.3	2582	—	**3/V 19 L4**	**—**	**BN180L4**	**—**	—	—	494100	544000	200000	432
0.58	284800	1.8	2520	—	**3/V 21 L4**	**—**	**BN180L4**	**—**	—	—	696500	829000	1200000	442
0.59	275300	1.1	2464	—	**3/V 18 ML4**	**—**	**BN180L4**	**—**	—	—	403900	456100	200000	422
0.64	263100	2.1	2275	—	**3/V 21 L4**	**—**	**BN180L4**	**—**	—	—	686400	817000	1200000	442
0.77	218600	2.1	1890	—	**3/V 21 L4**	**—**	**BN180L4**	**—**	—	—	668500	795700	1200000	442
0.79	213700	1.4	1848	—	**3/V 18 ML4**	**—**	**BN180L4**	**—**	—	—	387700	437700	200000	422
0.81	212900	2.5	1800	—	**3/V 21 L4**	**—**	**BN180L4**	**—**	—	—	663800	790100	1200000	442
0.82	198800	0.9	1780	—	**3/V 17 ML4**	**—**	**BN180L4**	**—**	—	—	405300	430600	150000	413
0.84	202200	1.5	1748	—	**3/V 18 ML4**	**—**	**BN180L4**	**—**	—	—	384600	434200	200000	422
0.96	179400	2.9	1517	—	**3/V 21 L4**	**—**	**BN180L4**	**—**	—	—	647800	771000	1200000	442
0.99	170400	1.5	1473	—	**3/V 18 ML4**	**—**	**BN180L4**	**—**	—	—	375300	423800	198800	422
1.1	146100	1.1	1365	—	**3/V 17 ML3**	**—**	**BN180L4**	**—**	—	—	390300	414600	145400	412
1.2	138300	1.0	1215	—	**3/V 17 ML3**	**—**	**BN180L4**	**—**	—	—	383800	407800	139800	412
1.2	144100	2.0	1232	—	**3/V 18 ML4**	**—**	**BN180L4**	**—**	—	—	365900	413100	187300	422
1.2	149000	2.9	1260	—	**3/V 21 L4**	**—**	**BN180L4**	**—**	—	—	630800	750900	1138800	442
1.3	121400	1.1	1134	—	**3/V 17 ML3**	**—**	**BN180L4**	**—**	—	—	380100	403800	136600	412
1.3	136300	2.1	1165	—	**3/V 18 ML4**	**—**	**BN180L4**	**—**	—	—	363000	409800	183800	422
1.4	113400	1.0	1059	—	**3/V 16 ML3**	**—**	**BN180L4**	**—**	—	—	241900	271300	133600	402
1.4	116500	1.1	1024	—	**3/V 17 ML3**	**—**	**BN180L4**	**—**	—	—	374500	397900	132100	412
1.5	114900	2.1	982	—	**3/V 18 ML4**	**—**	**BN180L4**	**—**	—	—	354200	399900	173600	422
1.6	95600	1.1	893	—	**3/V 16 ML3**	**—**	**BN180L4**	**—**	—	—	236000	264800	126200	402
1.7	96900	1.1	851	—	**3/V 17 ML3**	**—**	**BN180L4**	**—**	—	—	364700	387500	124200	412
1.8	90400	1.1	794	—	**3/V 16 ML3**	**—**	**BN180L4**	**—**	—	—	232200	260400	121400	402
1.8	94400	1.4	810	—	**3/V 17 ML3**	**—**	**BN180L4**	**—**	—	—	362200	384800	122100	412
1.9	89500	2.1	765	—	**3/V 18 ML4**	**—**	**BN180L4**	**—**	—	—	341800	385900	159800	422
2.1	79600	1.8	683	—	**3/V 17 ML3**	**—**	**BN180L4**	**—**	—	—	353500	375500	115400	412
2.2	76600	1.1	665	—	**3/V 15 ML3**	**—**	**BN180L4**	**—**	—	—	147900	177300	68600	390
2.2	76100	1.1	669	—	**3/V 16 ML3**	**—**	**BN180L4**	**—**	—	—	226500	254100	114600	402
2.4	72500	1.8	608	—	**3/V 17 ML3**	**—**	**BN180L4**	**—**	—	—	347600	369300	111000	412

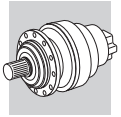

A

P_1 = 22 kW

n_2 min^{-1}	M_{n2} Nm	f_S	i	Pt kW					Rn_2 [N] MC/PC	MZ/PZ	HC	HZ	FZ	
2.6	64500	1.3	560	—	**3/V 15 ML3**	**—**	**BN180L4**	**—**	—	—	144300	173100	64800	390
2.6	66100	1.8	567	—	**3/V 17 ML3**	**—**	**BN180L4**	**—**	—	—	344200	365700	108500	412
2.8	61800	1.8	530	—	**3/V 16 ML3**	**—**	**BN180L4**	**—**	—	—	219100	245800	106000	402
2.9	59400	1.0	498	—	**3/V 14 ML3**	**—**	**BN180L4**	**—**	—	—	141900	170200	62300	378
2.9	59400	1.4	498	—	**3/V 15 ML3**	**—**	**BN180L4**	**—**	—	—	141900	170200	62300	390
2.9	61000	2.1	512	—	**3/V 17 ML3**	**—**	**BN180L4**	**—**	—	—	339200	360400	104800	412
3.3	51400	0.9	446	—	**3/V 14 ML3**	**—**	**BN180L4**	**—**	—	—	139700	167500	60100	378
3.3	51400	1.3	446	—	**3/V 15 ML3**	**—**	**BN180L4**	**—**	—	—	139700	167500	60100	390
3.3	52000	1.8	446	—	**3/V 16 ML3**	**—**	**BN180L4**	**—**	—	—	213800	239800	100100	402
3.4	50700	0.9	425	—	**3/V 13 ML3**	**—**	**BN180L4**	**—**	—	—	149300	174900	52600	366
3.4	50700	2.1	425	—	**3/V 17 ML3**	**—**	**BN180L4**	**—**	—	—	330400	351000	98500	412
3.6	49400	2.4	405	—	**3/V 17 ML3**	**—**	**BN180L4**	**—**	—	—	328100	348500	96900	412
3.7	47300	1.0	397	—	**3/V 14 ML3**	**—**	**BN180L4**	**—**	—	—	137400	164800	57800	378
3.7	47300	2.1	397	—	**3/V 16 ML3**	**—**	**BN180L4**	**—**	—	—	210300	235900	96300	402
3.8	46500	1.3	386	—	**3/V 15 ML3**	**—**	**BN180L4**	**—**	—	—	136900	164100	57300	390
3.9	42600	0.9	370	—	**3/V 13 ML3**	**—**	**BN180L4**	**—**	—	—	146300	171500	50200	366
29.7	6600	1.3	49.2	—	**—**	**3/A 07 L2**	**BN180L4**	**—**	20700	25900	48300	63600	14400	319
35	5560	1.7	41.5	—	**—**	**3/A 07 L2**	**BN180L4**	**—**	19500	24400	45900	60400	13600	319
45	4330	1.8	32.3	—	**—**	**3/A 07 L2**	**BN180L4**	**—**	18000	22500	42600	56000	12500	319
54	3630	1.8	27.1	—	**—**	**3/A 07 L2**	**BN180L4**	**—**	17000	21200	40400	53100	11800	319

25.3 DATI TECNICI RIDUTTORI IN LINEA 300M L

Guida alla consultazione delle tabelle.

311M L	350	49210 Nm

n_1 min^{-1}		i	n_2 min^{-1}	M_{n2} Nm	P_{n1} kW	P_t kW	P (IEC)	Rn_2 [N] MC	MZ	HC/PC	HZ/PZ	FZ	$M_{2\,max}$ Nm
500	**311ML1**	4.09	**122**	23100	200	70	200 ... 250	—	—	46200	59000	13100	58300
	311ML1	5.25	**95**	24300	200	70	200 ... 250	—	—	49800	63600	14200	58300
	311ML1	6.23	**80**	24700	200	70	200 ... 250	—	—	52500	66900	15100	58300
	311ML2	14.0	**36**	26800	106	52	180 ... 250	—	—	66900	85400	19800	58300
	311ML2	16.7	**29.9**	29000	97	52	180 ... 250	—	—	70600	90000	20900	58300
	311ML2	18.0	**27.8**	31400	97	52	180 ... 250	—	—	72100	92000	21500	58300
	311ML2	21.5	**23.3**	28100	73	52	180 ... 250	—	—	76100	97000	22800	58300
	311ML2	25.5	**19.6**	28400	62	52	180 ... 250	—	—	80100	100000	24100	58300

Valore di coppia nominale del riduttore indipendente dalla potenza meccanica installata

1	Coppia di riferimento
2	Velocità di comando riduttore
3	Grandezza riduttore in esecuzione lineare
4	Rapporto di riduzione
5	Velocità angolare all'albero lento
6	Coppia nominale all'albero lento del riduttore, basata su: - fattore di servizio f_S=1 - durata teorica di 10000 h
7	Potenza nominale applicabile al riduttore, per: - fattore di servizio f_S=1 - durata teorica di 10000 h
8	Potenza termica riduttore
9	Grandezza motore elettrico IEC installabile
10	Carico radiale applicabile all'albero lento, calcolato per: - fattore di servizio f_S=1 - durata teorica di 10000 h - velocità uscita n_2 Per forze non applicate in mezzeria riferirsi ai diagrammi riportati a seguito delle pagine dimensionali del riduttore in oggetto
11	Coppia massima
12	Pagina delle dimensioni

B

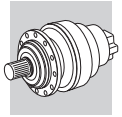

300 L

246

1250 Nm

n_1 min^{-1}		i	n_2 min^{-1}	M_{n2} Nm	P_{n1} kW	P_t kW	P (IEC)	Rn_2 [N] MC/PC	MZ/PZ	HC	HZ	FZ	$M_{2\,max}$ Nm
1500	**300L1**	**3.48**	431	470	20.0	7.5	71 ... 132	1850	1850	6950	8080	1060	2000
	300L1	**4.26**	352	490	18.8	7.5	71 ... 132	1980	1980	7390	8590	1130	2400
	300L1	**5.77**	260	470	13.3	7.5	71 ... 132	2190	2190	8090	9410	1250	2400
	300L1	**7.20**	208	410	9.2	7.5	71 ... 132	2360	2360	8650	10100	1350	2400
	300L1	**9.00**	167	320	5.7	7.5	71 ... 132	2540	2540	9240	10700	1450	2400
	300L2	**12.1**	124	680	9.4	7.5	71 ... 132	2810	2810	10100	11800	1600	2000
	300L2	**14.8**	101	720	8.1	7.5	71 ... 132	3010	3010	10700	12500	1720	2000
	300L2	**18.2**	83	750	6.9	7.5	71 ... 132	3220	3220	11400	13300	1840	2400
	300L2	**20.1**	75	640	5.3	7.5	71 ... 132	3320	3320	11800	13700	1900	2000
	300L2	**24.6**	61	800	5.5	7.5	71 ... 132	3560	3560	12500	14500	2030	2400
	300L2	**30.7**	49	840	4.6	7.5	71 ... 132	3830	3830	13400	15500	2190	2400
	300L2	**33.3**	45	650	3.3	7.5	71 ... 132	3940	3940	13700	15900	2250	2400
	300L2	**38.4**	39	840	3.7	7.5	71 ... 132	4130	4130	14300	16600	2360	2400
	300L2	**41.5**	36	650	2.6	7.5	71 ... 132	4240	4240	14600	17000	2420	2400
	300L2	**51.9**	28.9	650	2.1	7.5	71 ... 132	4560	4560	15600	18200	2610	2400
	300L2	**64.8**	23.1	550	1.4	7.5	71 ... 132	4910	4910	16700	19400	2810	2400
	300L3	**51.6**	29.1	850	2.8	7.5	71 ... 132	4560	4560	15600	18200	2600	2000
	300L3	**63.2**	23.7	850	2.3	7.5	71 ... 132	4870	4870	16600	19300	2780	2400
	300L3	**69.9**	21.5	650	1.6	7.5	71 ... 132	5040	5040	17100	19900	2880	2000
	300L3	**77.5**	19.4	850	1.9	7.5	71 ... 132	5220	5220	17600	20500	2980	2400
	300L3	**85.6**	17.5	850	1.7	7.5	71 ... 132	5390	5390	18200	21100	3080	2400
	300L3	**105**	14.3	860	1.4	7.5	71 ... 132	5770	5770	19300	22500	3300	2400
	300L3	**116**	13.0	650	0.97	7.5	71 ... 132	5960	5960	19900	23100	3410	2400
	300L3	**131**	11.5	860	1.1	7.5	71 ... 132	6210	6210	20600	24000	3550	2400
	300L3	**142**	10.6	860	1.0	7.5	71 ... 132	6380	6380	21100	24600	3650	2400
	300L3	**177**	8.5	880	0.86	7.5	71 ... 132	6500	6500	21500	25000	3920	2400
	300L3	**192**	7.8	650	0.58	7.5	71 ... 132	6500	6500	21500	25000	4030	2400
	300L3	**221**	6.8	910	0.71	7.5	71 ... 132	6500	6500	21500	25000	4230	2400
	300L3	**240**	6.3	650	0.47	7.5	71 ... 132	6500	6500	21500	25000	4340	2400
	300L3	**299**	5.0	650	0.37	7.5	71 ... 132	6500	6500	21500	25000	4670	2400
	300L3	**374**	4.0	670	0.31	7.5	71 ... 132	6710	6710	22200	25800	5030	2400
	300L4	**330**	4.5	970	0.52	6.0	71 ... 132	6590	6590	21800	25300	4830	2400
	300L4	**403**	3.7	680	0.30	6.0	71 ... 132	6780	6780	22400	26100	5160	2400
	300L4	**447**	3.4	1020	0.40	6.0	71 ... 132	6880	6880	22800	26500	5340	2400
	300L4	**494**	3.0	1030	0.37	6.0	71 ... 132	6980	6980	23100	26800	5520	2400
	300L4	**558**	2.7	1060	0.34	6.0	71 ... 132	7100	7100	23500	27300	5750	2400
	300L4	**616**	2.4	1070	0.31	6.0	71 ... 132	7200	7200	23800	27700	5950	2400
	300L4	**755**	2.0	1110	0.26	6.0	71 ... 132	7420	7420	24500	28500	6360	2400
	300L4	**819**	1.8	1130	0.24	6.0	71 ... 132	7500	7500	24800	28900	6540	2400
	300L4	**942**	1.6	1160	0.22	6.0	71 ... 132	7650	7650	25300	29400	6850	2400
	300L4	**1022**	1.5	1170	0.20	6.0	71 ... 132	7740	7740	25600	29800	7040	2400
	300L4	**1108**	1.4	810	0.13	6.0	71 ... 132	7830	7830	25900	30100	7230	2400
	300L4	**1275**	1.2	1220	0.17	6.0	71 ... 132	7990	7990	26400	30700	7580	2400
	300L4	**1383**	1.1	850	0.11	6.0	71 ... 132	8090	8090	26700	31100	7790	2400
	300L4	**1591**	0.94	1250	0.14	6.0	71 ... 132	8250	8250	27300	31700	8000	2400
	300L4	**1725**	0.87	860	0.09	6.0	71 ... 132	8350	8350	27600	32100	8000	2400
	300L4	**2153**	0.70	860	0.07	6.0	71 ... 132	8610	8610	28500	33100	8000	2400
	300L4	**2692**	0.56	1000	0.07	6.0	71 ... 132	8890	8890	29400	34000	8000	2400
1000	**300L1**	**3.48**	287	530	16.5	9.0	71 ... 132	2120	2120	7850	9130	1210	2000
	300L1	**4.26**	235	560	14.1	9.0	71 ... 132	2270	2270	8340	9700	1300	2400
	300L1	**5.77**	173	530	10.0	9.0	71 ... 132	2510	2510	9140	10600	1430	2400
	300L1	**7.20**	139	460	6.9	9.0	71 ... 132	2700	2700	9760	11400	1540	2400
	300L1	**9.00**	111	360	4.3	9.0	71 ... 132	2910	2910	10400	12100	1660	2400
	300L2	**12.1**	83	730	6.7	9.0	71 ... 132	3220	3220	11400	13300	1840	2000
	300L2	**14.8**	67	790	5.9	9.0	71 ... 132	3440	3440	12100	14100	1970	2000
	300L2	**18.2**	55	820	5.0	9.0	71 ... 132	3680	3680	12900	15000	2100	2400
	300L2	**20.1**	50	650	3.6	9.0	71 ... 132	3810	3810	13300	15400	2170	2000
	300L2	**24.6**	41	840	3.8	9.0	71 ... 132	4070	4070	14100	16400	2330	2400
	300L2	**30.7**	33	850	3.1	9.0	71 ... 132	4380	4380	15100	17500	2500	2400
	300L2	**33.3**	30	650	2.2	9.0	71 ... 132	4500	4500	15500	18000	2570	2400
	300L2	**38.4**	26.1	850	2.5	9.0	71 ... 132	4720	4720	16100	18800	2700	2400

B

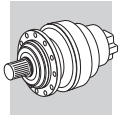

300 L

246

1250 Nm

n_1 min^{-1}		i	n_2 min^{-1}	M_{n2} Nm	P_{n1} kW	P_t kW	P (IEC)	Rn_2 [N] MC/PC	MZ/PZ	HC	HZ	FZ	$M_{2\,max}$ Nm
1000	**300L2**	**41.5**	24.1	650	1.7	9.0	71 ... 132	4850	4850	16500	19200	2770	2400
	300L2	**51.9**	19.3	650	1.4	9.0	71 ... 132	5220	5220	17700	20500	2980	2400
	300L2	**64.8**	15.4	550	0.94	9.0	71 ... 132	5620	5620	18900	21900	3210	2400
	300L3	**51.6**	19.4	850	1.9	9.0	71 ... 132	5210	5210	17600	20500	2980	2000
	300L3	**63.2**	15.8	850	1.5	9.0	71 ... 132	5580	5580	18700	21800	3190	2400
	300L3	**69.9**	14.3	650	1.1	9.0	71 ... 132	5770	5770	19300	22500	3290	2000
	300L3	**77.5**	12.9	860	1.3	9.0	71 ... 132	5970	5970	19900	23200	3410	2400
	300L3	**85.6**	11.7	860	1.2	9.0	71 ... 132	6170	6170	20500	23900	3530	2400
	300L3	**105**	9.5	870	0.95	9.0	71 ... 132	6500	6500	21500	25000	3770	2400
	300L3	**116**	8.6	650	0.64	9.0	71 ... 132	6500	6500	21500	25000	3900	2400
	300L3	**131**	7.6	890	0.78	9.0	71 ... 132	6500	6500	21500	25000	4060	2400
	300L3	**142**	7.0	900	0.73	9.0	71 ... 132	6500	6500	21500	25000	4170	2400
	300L3	**177**	5.6	930	0.60	9.0	71 ... 132	6500	6500	21500	25000	4490	2400
	300L3	**192**	5.2	650	0.39	9.0	71 ... 132	6500	6500	21500	25000	4620	2400
	300L3	**221**	4.5	970	0.50	9.0	71 ... 132	6590	6590	21800	25400	4840	2400
	300L3	**240**	4.2	670	0.32	9.0	71 ... 132	6670	6670	22100	25700	4970	2400
	300L3	**299**	3.3	700	0.27	9.0	71 ... 132	6880	6880	22800	26500	5350	2400
	300L3	**374**	2.7	720	0.22	9.0	71 ... 132	7110	7110	23500	27300	5760	2400
	300L4	**330**	3.0	1040	0.37	7.2	71 ... 132	6980	6980	23100	26900	5530	2400
	300L4	**403**	2.5	730	0.21	7.2	71 ... 132	7180	7180	23800	27600	5910	2400
	300L4	**447**	2.2	1090	0.29	7.2	71 ... 132	7290	7290	24100	28000	6120	2400
	300L4	**494**	2.0	1110	0.27	7.2	71 ... 132	7400	7400	24500	28400	6320	2400
	300L4	**558**	1.8	1130	0.24	7.2	71 ... 132	7530	7530	24900	28900	6590	2400
	300L4	**616**	1.6	1150	0.22	7.2	71 ... 132	7630	7630	25200	29400	6810	2400
	300L4	**755**	1.3	1190	0.19	7.2	71 ... 132	7860	7860	26000	30200	7280	2400
	300L4	**819**	1.2	1210	0.17	7.2	71 ... 132	7950	7950	26300	30600	7480	2400
	300L4	**942**	1.1	1240	0.16	7.2	71 ... 132	8110	8110	26800	31200	7840	2400
	300L4	**1022**	0.98	1250	0.14	7.2	71 ... 132	8210	8210	27100	31600	8000	2400
	300L4	**1108**	0.90	860	0.09	7.2	71 ... 132	8300	8300	27500	31900	8000	2400
	300L4	**1275**	0.78	1250	0.12	7.2	71 ... 132	8470	8470	28000	32600	8000	2400
	300L4	**1383**	0.72	860	0.07	7.2	71 ... 132	8570	8570	28300	33000	8000	2400
	300L4	**1591**	0.63	1250	0.09	7.2	71 ... 132	8740	8740	28900	33600	8000	2400
	300L4	**1725**	0.58	860	0.06	7.2	71 ... 132	8840	8840	29300	34000	8000	2400
	300L4	**2153**	0.46	860	0.05	7.2	71 ... 132	9130	9130	30200	34000	8000	2400
	300L4	**2692**	0.37	1000	0.04	7.2	71 ... 132	9420	9420	31000	34000	8000	2400
500	**300L1**	**3.48**	144	650	10.2	15	71 ... 132	2670	2670	9670	11200	1530	2000
	300L1	**4.26**	117	690	8.7	15	71 ... 132	2860	2860	10300	11900	1630	2400
	300L1	**5.77**	87	630	5.9	15	71 ... 132	3160	3160	11200	13100	1810	2400
	300L1	**7.20**	69	530	4.0	15	71 ... 132	3410	3410	12000	14000	1950	2400
	300L1	**9.00**	56	370	2.2	15	71 ... 132	3670	3670	12900	14900	2100	2400
	300L2	**12.1**	41	730	3.4	15	71 ... 132	4050	4050	14100	16300	2310	2000
	300L2	**14.8**	34	840	3.2	15	71 ... 132	4340	4340	14900	17400	2480	2000
	300L2	**18.2**	27.5	850	2.6	15	71 ... 132	4640	4640	15900	18500	2650	2400
	300L2	**20.1**	24.9	650	1.8	15	71 ... 132	4800	4800	16400	19000	2740	2000
	300L2	**24.6**	20.3	850	1.9	15	71 ... 132	5130	5130	17400	20200	2930	2400
	300L2	**30.7**	16.3	850	1.5	15	71 ... 132	5520	5520	18600	21600	3160	2400
	300L2	**33.3**	15.0	650	1.1	15	71 ... 132	5680	5680	19000	22100	3240	2400
	300L2	**38.4**	13.0	860	1.2	15	71 ... 132	5950	5950	19900	23100	3400	2400
	300L2	**41.5**	12.0	650	0.87	15	71 ... 132	6110	6110	20300	23600	3490	2400
	300L2	**51.9**	9.6	650	0.70	15	71 ... 132	6500	6500	21500	25000	3760	2400
	300L2	**64.8**	7.7	550	0.47	15	71 ... 132	6500	6500	21500	25000	4050	2400
	300L3	**51.6**	9.7	860	0.96	15	71 ... 132	6500	6500	21500	25000	3750	2000
	300L3	**63.2**	7.9	890	0.81	15	71 ... 132	6500	6500	21500	25000	4020	2400
	300L3	**69.9**	7.2	650	0.53	15	71 ... 132	6500	6500	21500	25000	4150	2000
	300L3	**77.5**	6.5	920	0.68	15	71 ... 132	6500	6500	21500	25000	4300	2400
	300L3	**85.6**	5.8	930	0.62	15	71 ... 132	6500	6500	21500	25000	4440	2400
	300L3	**105**	4.8	960	0.52	15	71 ... 132	6540	6540	21600	25200	4750	2400
	300L3	**116**	4.3	670	0.33	15	71 ... 132	6640	6640	22000	25500	4910	2400
	300L3	**131**	3.8	990	0.44	15	71 ... 132	6750	6750	22300	26000	5120	2400
	300L3	**142**	3.5	1010	0.41	15	71 ... 132	6830	6830	22600	26300	5260	2400

B

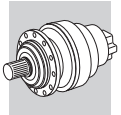

300 L — 246 — 1250 Nm

n_1 min^{-1}		i	n_2 min^{-1}	M_{n2} Nm	P_{n1} kW	P_t kW	P (IEC)	Rn_2 [N] MC/PC	MZ/PZ	HC	HZ	FZ	$M_{2\,max}$ Nm
500	**300L3**	**177**	2.8	1050	0.34	15	71 ... 132	7050	7050	23300	27100	5660	2400
	300L3	**192**	2.6	730	0.22	15	71 ... 132	7130	7130	23600	27400	5820	2400
	300L3	**221**	2.3	1090	0.28	15	71 ... 132	7280	7280	24100	28000	6090	2400
	300L3	**240**	2.1	750	0.18	15	71 ... 132	7360	7360	24400	28300	6260	2400
	300L3	**299**	1.7	780	0.15	15	71 ... 132	7600	7600	25100	29200	6740	2400
	300L3	**374**	1.3	820	0.13	15	71 ... 132	7850	7850	26000	30200	7260	2400
	300L4	**330**	1.5	1170	0.21	12	71 ... 132	7710	7710	25500	29700	6970	2400
	300L4	**403**	1.2	830	0.12	12	71 ... 132	7930	7930	26200	30500	7450	2400
	300L4	**447**	1.1	1230	0.16	12	71 ... 132	8050	8050	26600	31000	7710	2400
	300L4	**494**	1.0	1250	0.15	12	71 ... 132	8170	8170	27000	31400	7970	2400
	300L4	**558**	0.90	1250	0.13	12	71 ... 132	8310	8310	27500	32000	8000	2400
	300L4	**616**	0.81	1250	0.12	12	71 ... 132	8430	8430	27900	32400	8000	2400
	300L4	**755**	0.66	1250	0.10	12	71 ... 132	8680	8680	28700	33400	8000	2400
	300L4	**819**	0.61	1250	0.09	12	71 ... 132	8780	8780	29000	33800	8000	2400
	300L4	**942**	0.53	1250	0.08	12	71 ... 132	8960	8960	29600	34000	8000	2400
	300L4	**1022**	0.49	1250	0.07	12	71 ... 132	9060	9060	30000	34000	8000	2400
	300L4	**1108**	0.45	860	0.05	12	71 ... 132	9160	9160	30300	34000	8000	2400
	300L4	**1275**	0.39	1250	0.06	12	71 ... 132	9350	9350	30900	34000	8000	2400
	300L4	**1383**	0.36	860	0.04	12	71 ... 132	9460	9460	31000	34000	8000	2400
	300L4	**1591**	0.31	1250	0.05	12	71 ... 132	9650	9650	31000	34000	8000	2400
	300L4	**1725**	0.29	860	0.03	12	71 ... 132	9760	9760	31000	34000	8000	2400
	300L4	**2153**	0.23	860	0.02	12	71 ... 132	10100	10100	31000	34000	8000	2400
	300L4	**2692**	0.19	1000	0.02	12	71 ... 132	10400	10400	31000	34000	8000	2400

301 L — 256 — 2460 Nm

n_1 min^{-1}		i	n_2 min^{-1}	M_{n2} Nm	P_{n1} kW	P_t kW	P (IEC)	Rn_2 [N] MC	MZ	HC/PC	HZ/PZ	FZ	$M_{2\,max}$ Nm
1500	**301L1**	**3.48**	431	840	30	7.5	71 ... 132	1850	1850	6950	7600	1060	3400
	301L1	**4.26**	352	880	30	7.5	71 ... 132	1980	1980	7390	8080	1130	3400
	301L1	**5.77**	260	930	26.1	7.5	71 ... 132	2190	2190	8090	8840	1250	3400
	301L1	**7.20**	208	750	17.0	7.5	71 ... 132	2360	2360	8650	9450	1350	3400
	301L1	**9.00**	167	630	11.3	7.5	71 ... 132	2540	2540	9240	10100	1450	3400
	301L2	**12.1**	124	1220	16.8	7.5	71 ... 132	2810	2810	10100	11000	1600	3400
	301L2	**14.8**	101	1280	14.4	7.5	71 ... 132	3010	3010	10700	11700	1720	3400
	301L2	**18.2**	83	1360	12.5	7.5	71 ... 132	3220	3220	11400	12500	1840	3400
	301L2	**20.1**	75	1260	10.5	7.5	71 ... 132	3320	3320	11800	12900	1900	3400
	301L2	**24.6**	61	1490	10.1	7.5	71 ... 132	3560	3560	12500	13700	2030	3400
	301L2	**30.7**	49	1580	8.6	7.5	71 ... 132	3830	3830	13400	14600	2190	3400
	301L2	**33.3**	45	1300	6.5	7.5	71 ... 132	3940	3940	13700	15000	2250	3400
	301L2	**38.4**	39	1540	6.7	7.5	71 ... 132	4130	4130	14300	15600	2360	3400
	301L2	**41.5**	36	1300	5.2	7.5	71 ... 132	4240	4240	14600	16000	2420	3400
	301L2	**51.9**	28.9	1300	4.2	7.5	71 ... 132	4560	4560	15600	17100	2610	3400
	301L2	**64.8**	23.1	1150	3.0	7.5	71 ... 132	4910	4910	16700	18300	2810	3400
	301L3	**51.6**	29.1	1630	5.4	7.5	71 ... 132	4560	4560	15600	17100	2600	3400
	301L3	**63.2**	23.7	1650	4.5	7.5	71 ... 132	4870	4870	16600	18100	2780	3400
	301L3	**69.9**	21.5	1300	3.2	7.5	71 ... 132	5040	5040	17100	18700	2880	3400
	301L3	**77.5**	19.4	1670	3.7	7.5	71 ... 132	5220	5220	17600	19300	2980	3400
	301L3	**85.6**	17.5	1680	3.4	7.5	71 ... 132	5390	5390	18200	19900	3080	3400
	301L3	**105**	14.3	1700	2.8	7.5	71 ... 132	5770	5770	19300	21100	3300	3400
	301L3	**116**	13.0	1300	1.9	7.5	71 ... 132	5960	5960	19900	21700	3410	3400
	301L3	**131**	11.5	1720	2.3	7.5	71 ... 132	6210	6210	20600	22600	3550	3400
	301L3	**142**	10.6	1720	2.1	7.5	71 ... 132	6380	6380	21100	23100	3650	3400
	301L3	**177**	8.5	1770	1.7	7.5	71 ... 132	6500	6500	21500	23500	3920	3400
	301L3	**192**	7.8	1300	1.2	7.5	71 ... 132	6500	6500	21500	23500	4030	3400
	301L3	**221**	6.8	1790	1.4	7.5	71 ... 132	6500	6500	21500	23500	4230	3400
	301L3	**240**	6.3	1300	0.93	7.5	71 ... 132	6500	6500	21500	23500	4340	3400
	301L3	**299**	5.0	1300	0.75	7.5	71 ... 132	6500	6500	21500	23500	4670	3400
	301L3	**374**	4.0	1350	0.62	7.5	71 ... 132	6710	6710	22200	24300	5030	3400

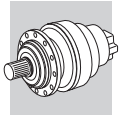

301 L	256	2460 Nm

n_1 min^{-1}		i	n_2 min^{-1}	M_{n2} Nm	P_{n1} kW	P_t kW	P (IEC)	Rn_2 [N] MC	MZ	HC/PC	HZ/PZ	FZ	$M_{2\,max}$ Nm
1500	**301L4**	**330**	4.5	1920	1.0	6.0	71 ... 132	6590	6590	21800	23800	4830	3400
	301L4	**403**	3.7	1370	0.60	6.0	71 ... 132	6780	6780	22400	24500	5160	3400
	301L4	**447**	3.4	2030	0.81	6.0	71 ... 132	6880	6880	22800	24900	5340	3400
	301L4	**494**	3.0	2070	0.74	6.0	71 ... 132	6980	6980	23100	25200	5520	3400
	301L4	**558**	2.7	2110	0.67	6.0	71 ... 132	7100	7100	23500	25700	5750	3400
	301L4	**616**	2.4	2150	0.62	6.0	71 ... 132	7200	7200	23800	26000	5950	3400
	301L4	**755**	2.0	2220	0.52	6.0	71 ... 132	7420	7420	24500	26800	6360	3400
	301L4	**819**	1.8	2240	0.49	6.0	71 ... 132	7500	7500	24800	27100	6540	3400
	301L4	**942**	1.6	2290	0.43	6.0	71 ... 132	7650	7650	25300	27700	6850	3400
	301L4	**1022**	1.5	2320	0.40	6.0	71 ... 132	7740	7740	25600	28000	7040	3400
	301L4	**1108**	1.4	1630	0.26	6.0	71 ... 132	7830	7830	25900	28300	7230	3400
	301L4	**1275**	1.2	2400	0.33	6.0	71 ... 132	7990	7990	26400	28900	7580	3400
	301L4	**1383**	1.1	1700	0.22	6.0	71 ... 132	8090	8090	26700	29200	7790	3400
	301L4	**1591**	0.94	2000	0.22	6.0	71 ... 132	8250	8250	27300	29800	8000	3400
	301L4	**1725**	0.87	1720	0.18	6.0	71 ... 132	8350	8350	27600	30200	8000	3400
	301L4	**2153**	0.70	1720	0.14	6.0	71 ... 132	8610	8610	28500	31100	8000	3400
	301L4	**2692**	0.56	1720	0.11	6.0	71 ... 132	8890	8890	29400	32200	8000	3400
1000	**301L1**	**3.48**	287	950	29.4	9.0	71 ... 132	2120	2120	7850	8580	1210	3400
	301L1	**4.26**	235	990	25.1	9.0	71 ... 132	2270	2270	8340	9120	1300	3400
	301L1	**5.77**	173	1050	19.7	9.0	71 ... 132	2510	2510	9140	9990	1430	3400
	301L1	**7.20**	139	850	12.8	9.0	71 ... 132	2700	2700	9760	10700	1540	3400
	301L1	**9.00**	111	710	8.5	9.0	71 ... 132	2910	2910	10400	11400	1660	3400
	301L2	**12.1**	83	1330	12.3	9.0	71 ... 132	3220	3220	11400	12500	1840	3400
	301L2	**14.8**	67	1440	10.8	9.0	71 ... 132	3440	3440	12100	13300	1970	3400
	301L2	**18.2**	55	1530	9.4	9.0	71 ... 132	3680	3680	12900	14100	2100	3400
	301L2	**20.1**	50	1300	7.2	9.0	71 ... 132	3810	3810	13300	14500	2170	3400
	301L2	**24.6**	41	1600	7.2	9.0	71 ... 132	4070	4070	14100	15400	2330	3400
	301L2	**30.7**	33	1620	5.9	9.0	71 ... 132	4380	4380	15100	16500	2500	3400
	301L2	**33.3**	30	1300	4.3	9.0	71 ... 132	4500	4500	15500	16900	2570	3400
	301L2	**38.4**	26.1	1550	4.5	9.0	71 ... 132	4720	4720	16100	17600	2700	3400
	301L2	**41.5**	24.1	1300	3.5	9.0	71 ... 132	4850	4850	16500	18100	2770	3400
	301L2	**51.9**	19.3	1300	2.8	9.0	71 ... 132	5220	5220	17700	19300	2980	3400
	301L2	**64.8**	15.4	1150	2.0	9.0	71 ... 132	5620	5620	18900	20600	3210	3400
	301L3	**51.6**	19.4	1670	3.7	9.0	71 ... 132	5210	5210	17600	19300	2980	3400
	301L3	**63.2**	15.8	1690	3.1	9.0	71 ... 132	5580	5580	18700	20500	3190	3400
	301L3	**69.9**	14.3	1300	2.1	9.0	71 ... 132	5770	5770	19300	21100	3290	3400
	301L3	**77.5**	12.9	1710	2.5	9.0	71 ... 132	5970	5970	19900	21800	3410	3400
	301L3	**85.6**	11.7	1710	2.3	9.0	71 ... 132	6170	6170	20500	22400	3530	3400
	301L3	**105**	9.5	1740	1.9	9.0	71 ... 132	6500	6500	21500	23500	3770	3400
	301L3	**116**	8.6	1300	1.3	9.0	71 ... 132	6500	6500	21500	23500	3900	3400
	301L3	**131**	7.6	1790	1.6	9.0	71 ... 132	6500	6500	21500	23500	4060	3400
	301L3	**142**	7.0	1810	1.5	9.0	71 ... 132	6500	6500	21500	23500	4170	3400
	301L3	**177**	5.6	1860	1.2	9.0	71 ... 132	6500	6500	21500	23500	4490	3400
	301L3	**192**	5.2	1300	0.78	9.0	71 ... 132	6500	6500	21500	23500	4620	3400
	301L3	**221**	4.5	1850	0.96	9.0	71 ... 132	6590	6590	21800	23800	4840	3400
	301L3	**240**	4.2	1340	0.64	9.0	71 ... 132	6670	6670	22100	24100	4970	3400
	301L3	**299**	3.3	1390	0.53	9.0	71 ... 132	6880	6880	22800	24900	5350	3400
	301L3	**374**	2.7	1440	0.44	9.0	71 ... 132	7110	7110	23500	25700	5760	3400
	301L4	**330**	3.0	2070	0.74	7.2	71 ... 132	6980	6980	23100	25200	5530	3400
	301L4	**403**	2.5	1460	0.43	7.2	71 ... 132	7180	7180	23800	26000	5910	3400
	301L4	**447**	2.2	2180	0.58	7.2	71 ... 132	7290	7290	24100	26400	6120	3400
	301L4	**494**	2.0	2210	0.53	7.2	71 ... 132	7400	7400	24500	26700	6320	3400
	301L4	**558**	1.8	2250	0.48	7.2	71 ... 132	7530	7530	24900	27200	6590	3400
	301L4	**616**	1.6	2290	0.44	7.2	71 ... 132	7630	7630	25200	27600	6810	3400
	301L4	**755**	1.3	2360	0.37	7.2	71 ... 132	7860	7860	26000	28400	7280	3400
	301L4	**819**	1.2	2390	0.34	7.2	71 ... 132	7950	7950	26300	28700	7480	3400
	301L4	**942**	1.1	2440	0.31	7.2	71 ... 132	8110	8110	26800	29300	7840	3400
	301L4	**1022**	0.98	2460	0.28	7.2	71 ... 132	8210	8210	27100	29700	8000	3400
	301L4	**1108**	0.90	1720	0.18	7.2	71 ... 132	8300	8300	27500	30000	8000	3400
	301L4	**1275**	0.78	2460	0.23	7.2	71 ... 132	8470	8470	28000	30600	8000	3400

B

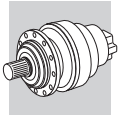

301 L	256	2460 Nm

n_1 min^{-1}		i	n_2 min^{-1}	M_{n2} Nm	P_{n1} kW	P_t kW	P (IEC)	Rn_2 [N] MC	MZ	HC/PC	HZ/PZ	FZ	$M_{2\,max}$ Nm
1000	**301L4**	**1383**	0.72	1720	0.15	7.2	71 ... 132	8570	8570	28300	31000	8000	3400
	301L4	**1591**	0.63	2000	0.15	7.2	71 ... 132	8740	8740	28900	31600	8000	3400
	301L4	**1725**	0.58	1720	0.12	7.2	71 ... 132	8840	8840	29300	32000	8000	3400
	301L4	**2153**	0.46	1720	0.09	7.2	71 ... 132	9130	9130	30200	33000	8000	3400
	301L4	**2692**	0.37	1720	0.08	7.2	71 ... 132	9420	9420	31000	34000	8000	3400
500	**301L1**	**3.48**	144	1170	18.1	15.0	71 ... 132	2670	2670	9670	10600	1530	3400
	301L1	**4.26**	117	1220	15.4	15.0	71 ... 132	2860	2860	10300	11200	1630	3400
	301L1	**5.77**	87	1250	11.7	15.0	71 ... 132	3160	3160	11200	12300	1810	3400
	301L1	**7.20**	69	1050	7.8	15.0	71 ... 132	3410	3410	12000	13100	1950	3400
	301L1	**9.00**	56	730	4.4	15.0	71 ... 132	3670	3670	12900	14000	2100	3400
	301L2	**12.1**	41	1430	6.6	15.0	71 ... 132	4050	4050	14100	15400	2310	3400
	301L2	**14.8**	34	1620	6.1	15.0	71 ... 132	4340	4340	14900	16300	2480	3400
	301L2	**18.2**	27.5	1630	5.0	15.0	71 ... 132	4640	4640	15900	17300	2650	3400
	301L2	**20.1**	24.9	1300	3.6	15.0	71 ... 132	4800	4800	16400	17900	2740	3400
	301L2	**24.6**	20.3	1660	3.8	15.0	71 ... 132	5130	5130	17400	19000	2930	3400
	301L2	**30.7**	16.3	1680	3.1	15.0	71 ... 132	5520	5520	18600	20300	3160	3400
	301L2	**33.3**	15.0	1300	2.2	15.0	71 ... 132	5680	5680	19000	20800	3240	3400
	301L2	**38.4**	13.0	1560	2.3	15.0	71 ... 132	5950	5950	19900	21700	3400	3400
	301L2	**41.5**	12.0	1300	1.7	15.0	71 ... 132	6110	6110	20300	22200	3490	3400
	301L2	**51.9**	9.6	1300	1.4	15.0	71 ... 132	6500	6500	21500	23500	3760	3400
	301L2	**64.8**	7.7	1150	0.99	15.0	71 ... 132	6500	6500	21500	23500	4050	3400
	301L3	**51.6**	9.7	1740	1.9	15.0	71 ... 132	6500	6500	21500	23500	3750	3400
	301L3	**63.2**	7.9	1780	1.6	15.0	71 ... 132	6500	6500	21500	23500	4020	3400
	301L3	**69.9**	7.2	1300	1.1	15.0	71 ... 132	6500	6500	21500	23500	4150	3400
	301L3	**77.5**	6.5	1830	1.4	15.0	71 ... 132	6500	6500	21500	23500	4300	3400
	301L3	**85.6**	5.8	1850	1.2	15.0	71 ... 132	6500	6500	21500	23500	4440	3400
	301L3	**105**	4.8	1910	1.0	15.0	71 ... 132	6540	6540	21600	23700	4750	3400
	301L3	**116**	4.3	1330	0.66	15.0	71 ... 132	6640	6640	22000	24000	4910	3400
	301L3	**131**	3.8	1980	0.87	15.0	71 ... 132	6750	6750	22300	24400	5120	3400
	301L3	**142**	3.5	2010	0.81	15.0	71 ... 132	6830	6830	22600	24700	5260	3400
	301L3	**177**	2.8	2090	0.68	15.0	71 ... 132	7050	7050	23300	25500	5660	3400
	301L3	**192**	2.6	1450	0.43	15.0	71 ... 132	7130	7130	23600	25800	5820	3400
	301L3	**221**	2.3	2000	0.52	15.0	71 ... 132	7280	7280	24100	26300	6090	3400
	301L3	**240**	2.1	1510	0.36	15.0	71 ... 132	7360	7360	24400	26600	6260	3400
	301L3	**299**	1.7	1570	0.30	15.0	71 ... 132	7600	7600	25100	27500	6740	3400
	301L3	**374**	1.3	1630	0.25	15.0	71 ... 132	7850	7850	26000	28400	7260	3400
	301L4	**330**	1.5	2310	0.41	12.0	71 ... 132	7710	7710	25500	27900	6970	3400
	301L4	**403**	1.2	1650	0.24	12.0	71 ... 132	7930	7930	26200	28700	7450	3400
	301L4	**447**	1.1	2420	0.32	12.0	71 ... 132	8050	8050	26600	29100	7710	3400
	301L4	**494**	1.0	2460	0.29	12.0	71 ... 132	8170	8170	27000	29500	7970	3400
	301L4	**558**	0.90	2460	0.26	12.0	71 ... 132	8310	8310	27500	30000	8000	3400
	301L4	**616**	0.81	2460	0.24	12.0	71 ... 132	8430	8430	27900	30500	8000	3400
	301L4	**755**	0.66	2460	0.19	12.0	71 ... 132	8680	8680	28700	31400	8000	3400
	301L4	**819**	0.61	2460	0.18	12.0	71 ... 132	8780	8780	29000	31700	8000	3400
	301L4	**942**	0.53	2460	0.15	12.0	71 ... 132	8960	8960	29600	32400	8000	3400
	301L4	**1022**	0.49	2460	0.14	12.0	71 ... 132	9060	9060	30000	32800	8000	3400
	301L4	**1108**	0.45	1720	0.09	12.0	71 ... 132	9160	9160	30300	33100	8000	3400
	301L4	**1275**	0.39	2460	0.11	12.0	71 ... 132	9350	9350	30900	33800	8000	3400
	301L4	**1383**	0.36	1720	0.07	12.0	71 ... 132	9460	9460	31000	34000	8000	3400
	301L4	**1591**	0.31	2000	0.07	12.0	71 ... 132	9650	9650	31000	34000	8000	3400
	301L4	**1725**	0.29	1720	0.06	12.0	71 ... 132	9760	9760	31000	34000	8000	3400
	301L4	**2153**	0.23	1720	0.05	12.0	71 ... 132	10100	10100	31000	34000	8000	3400
	301L4	**2692**	0.19	1720	0.04	12.0	71 ... 132	10400	10400	31000	34000	8000	3400

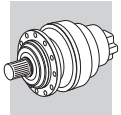

303 L

266

2970 Nm

n_1 min^{-1}		i	n_2 min^{-1}	M_{n2} Nm	P_{n1} kW	P_t kW	P (IEC)	Rn_2 [N] MC	MZ	HC/PC	HZ/PZ	FZ	$M_{2\,max}$ Nm
1500	**303L1**	**3.60**	417	1380	40	11.0	132 ... 200	6060	6920	13200	15700	3210	5200
	303L1	**4.25**	353	1430	40	11.0	132 ... 200	6400	7320	13900	16500	3400	5200
	303L1	**5.33**	281	1490	40	11.0	132 ... 200	6910	7890	14900	17600	3660	5200
	303L1	**6.20**	242	1400	36	11.0	132 ... 200	7260	8300	15600	18500	3850	5200
	303L1	**7.50**	200	1220	26.3	11.0	132 ... 200	7740	8840	16500	19500	4100	5200
	303L1	**9.67**	155	750	12.6	11.0	132 ... 200	8420	9620	17800	21100	4470	5200
	303L2	**12.5**	120	1640	20.0	9.0	71 ... 160	9180	10500	19200	22800	4870	5200
	303L2	**15.3**	98	1710	18.6	9.0	71 ... 160	9820	11200	20400	24200	5210	5200
	303L2	**18.1**	83	2020	18.6	9.0	71 ... 160	10400	11900	21500	25500	5510	5200
	303L2	**20.8**	72	1820	14.6	9.0	71 ... 160	10900	12400	22400	26500	5760	5200
	303L2	**22.7**	66	2100	15.4	9.0	71 ... 160	11200	12800	23000	27300	5940	5200
	303L2	**24.5**	61	2150	14.6	9.0	71 ... 160	11500	13100	23500	27900	6090	5200
	303L2	**26.4**	57	1820	11.5	9.0	71 ... 160	11800	13500	24100	28500	6250	5200
	303L2	**30.8**	49	2140	11.6	9.0	71 ... 160	12400	14200	25200	29800	6570	5200
	303L2	**35.8**	42	1820	8.5	9.0	71 ... 160	13000	14900	26300	31200	6910	5200
	303L2	**38.4**	39	2150	9.3	9.0	71 ... 160	13300	15200	26900	31900	7070	5200
	303L2	**44.6**	34	1820	6.8	9.0	71 ... 160	14000	16000	28200	33400	7440	5200
	303L2	**55.8**	26.9	1820	5.4	9.0	71 ... 160	15100	17300	30100	35700	8010	5200
	303L3	**53.4**	28.1	2170	7.0	7.5	71 ... 160	14900	17000	29700	35200	7900	5200
	303L3	**63.1**	23.8	2510	6.8	7.5	71 ... 160	15700	18000	31200	37000	8340	5200
	303L3	**72.3**	20.8	2230	5.3	7.5	71 ... 160	16500	18800	32500	38600	8730	5200
	303L3	**77.2**	19.4	2520	5.6	7.5	71 ... 160	16800	19200	33200	39300	8930	5200
	303L3	**90.2**	16.6	2250	4.3	7.5	71 ... 160	17700	20300	34800	41200	9400	5200
	303L3	**105**	14.4	2580	4.2	7.5	71 ... 160	18600	21300	36300	43100	9880	5200
	303L3	**113**	13.3	1820	2.8	7.5	71 ... 160	19100	21800	37200	44100	10100	5200
	303L3	**124**	12.1	1820	2.5	7.5	71 ... 160	19700	22600	38300	45400	10500	5200
	303L3	**141**	10.6	2610	3.2	7.5	71 ... 160	20600	23500	39800	47200	10900	5200
	303L3	**152**	9.8	1820	2.1	7.5	71 ... 160	21000	24000	40500	48000	11200	5200
	303L3	**164**	9.2	2200	2.3	7.5	71 ... 160	21000	24000	40500	48000	11500	5200
	303L3	**178**	8.5	2210	2.1	7.5	71 ... 160	21000	24000	40500	48000	11800	5200
	303L3	**190**	7.9	1830	1.7	7.5	71 ... 160	21000	24000	40500	48000	12100	5200
	303L3	**220**	6.8	2250	1.8	7.5	71 ... 160	21000	24000	40500	48000	12700	5200
	303L3	**258**	5.8	1840	1.2	7.5	71 ... 160	21000	24000	40500	48000	13300	5200
	303L3	**276**	5.4	2230	1.4	7.5	71 ... 160	21000	24000	40500	48000	13700	5200
	303L3	**321**	4.7	1860	1.0	7.5	71 ... 160	21200	24200	40900	48500	14400	5200
	303L3	**389**	3.9	1690	0.75	7.5	71 ... 160	21800	24900	42000	49800	15300	5200
	303L3	**402**	3.7	1940	0.83	7.5	71 ... 160	21900	25000	42200	50000	15500	5200
	303L4	**413**	3.6	2360	1.0	6.0	71 ... 160	22000	25100	42400	50200	15600	5200
	303L4	**446**	3.4	2810	1.1	6.0	71 ... 160	22200	25400	42900	50800	16000	5200
	303L4	**492**	3	2690	0.97	6.0	71 ... 160	22500	25800	43500	51500	16600	5200
	303L4	**556**	2.7	2810	0.90	6.0	71 ... 160	22900	26200	44200	52400	17200	5200
	303L4	**649**	2.3	2320	0.63	6.0	71 ... 160	23400	26800	45200	53600	18200	5200
	303L4	**718**	2.1	2150	0.53	6.0	71 ... 160	23800	27200	45900	54400	18800	5200
	303L4	**816**	1.8	2720	0.59	6.0	71 ... 160	24200	27700	46700	55400	19600	5200
	303L4	**896**	1.7	2230	0.44	6.0	71 ... 160	24600	28100	47400	56100	20200	5200
	303L4	**1018**	1.5	2740	0.48	6.0	71 ... 160	25000	28600	48200	57200	21100	5200
	303L4	**1098**	1.4	2310	0.37	6.0	71 ... 160	25300	28900	48700	57800	21600	5200
	303L4	**1278**	1.2	2790	0.39	6.0	71 ... 160	25800	29500	49800	59000	22800	5200
	303L4	**1370**	1.1	2400	0.31	6.0	71 ... 160	26100	29800	50300	59600	23300	5200
	303L4	**1586**	0.95	2250	0.25	6.0	71 ... 160	26600	30400	51400	60900	24000	5200
	303L4	**1854**	0.81	2440	0.23	6.0	71 ... 160	27200	31100	52500	62300	24000	5200
	303L4	**1991**	0.75	2850	0.25	6.0	71 ... 160	27500	31500	53100	62900	24000	5200
	303L4	**2243**	0.67	2000	0.16	6.0	71 ... 160	28000	32000	54000	64000	24000	5200
	303L4	**2799**	0.54	2000	0.13	6.0	71 ... 160	28900	33000	55700	66000	24000	5200
1000	**303L1**	**3.60**	278	1560	40	13.2	132 ... 200	6930	7920	14900	17700	3680	5200
	303L1	**4.25**	235	1620	40	13.2	132 ... 200	7330	8380	15700	18600	3890	5200
	303L1	**5.33**	188	1680	34	13.2	132 ... 200	7900	9030	16800	19900	4190	5200
	303L1	**6.20**	161	1580	27.5	13.2	132 ... 200	8310	9500	17600	20800	4410	5200
	303L1	**7.50**	133	1380	19.8	13.2	132 ... 200	8860	10100	18600	22100	4700	5200
	303L1	**9.67**	103	850	9.5	13.2	132 ... 200	9640	11000	20100	23800	5110	5200

B

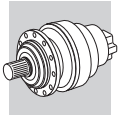

303 L	266	2970 Nm

n_1 min^{-1}		i	n_2 min^{-1}	M_{n2} Nm	P_{n1} kW	P_t kW	P (IEC)	Rn_2 [N] MC	MZ	HC/PC	HZ/PZ	FZ	$M_{2\,max}$ Nm
1000	**303L2**	**12.5**	80	1850	16.4	10.8	71 ... 160	10500	12000	21700	25700	5570	5200
	303L2	**15.3**	65	1940	14.0	10.8	71 ... 160	11200	12800	23100	27400	5960	5200
	303L2	**18.1**	55	2280	14.0	10.8	71 ... 160	11900	13600	24300	28800	6300	5200
	303L2	**20.8**	48	2030	10.9	10.8	71 ... 160	12400	14200	25300	30000	6600	5200
	303L2	**22.7**	44	2140	10.5	10.8	71 ... 160	12800	14600	26000	30800	6800	5200
	303L2	**24.5**	41	2320	10.5	10.8	71 ... 160	13100	15000	26600	31500	6970	5200
	303L2	**26.4**	38	1820	7.7	10.8	71 ... 160	13500	15400	27200	32200	7150	5200
	303L2	**30.8**	33	2160	7.8	10.8	71 ... 160	14200	16200	28400	33700	7520	5200
	303L2	**35.8**	28.0	1820	5.7	10.8	71 ... 160	14900	17000	29800	35300	7910	5200
	303L2	**38.4**	26.0	2160	6.3	10.8	71 ... 160	15300	17400	30400	36000	8100	5200
	303L2	**44.6**	22.4	1820	4.5	10.8	71 ... 160	16000	18300	31800	37700	8510	5200
	303L2	**55.8**	17.9	1820	3.6	10.8	71 ... 160	17300	19800	34000	40300	9170	5200
	303L3	**53.4**	18.7	2230	4.8	9.0	71 ... 160	17000	19500	33600	39800	9040	5200
	303L3	**63.1**	15.9	2570	4.7	9.0	71 ... 160	18000	20600	35300	41800	9550	5200
	303L3	**72.3**	13.8	2270	3.6	9.0	71 ... 160	18800	21500	36700	43500	10000	5200
	303L3	**77.2**	12.9	2600	3.9	9.0	71 ... 160	19300	22000	37500	44400	10200	5200
	303L3	**90.2**	11.1	2300	2.9	9.0	71 ... 160	20300	23200	39300	46500	10800	5200
	303L3	**105**	9.6	2660	2.9	9.0	71 ... 160	21000	24000	40500	48000	11300	5200
	303L3	**113**	8.9	1820	1.9	9.0	71 ... 160	21000	24000	40500	48000	11600	5200
	303L3	**124**	8.0	1830	1.7	9.0	71 ... 160	21000	24000	40500	48000	12000	5200
	303L3	**141**	7.1	2630	2.1	9.0	71 ... 160	21000	24000	40500	48000	12500	5200
	303L3	**152**	6.6	1830	1.4	9.0	71 ... 160	21000	24000	40500	48000	12800	5200
	303L3	**164**	6.1	2220	1.6	9.0	71 ... 160	21000	24000	40500	48000	13100	5200
	303L3	**178**	5.6	2220	1.4	9.0	71 ... 160	21000	24000	40500	48000	13500	5200
	303L3	**190**	5.3	1840	1.1	9.0	71 ... 160	21000	24000	40500	48000	13800	5200
	303L3	**220**	4.5	2240	1.2	9.0	71 ... 160	21300	24300	41100	48700	14500	5200
	303L3	**258**	3.9	1920	0.86	9.0	71 ... 160	21800	24900	42000	49800	15300	5200
	303L3	**276**	3.6	2330	0.97	9.0	71 ... 160	22000	25100	42400	50300	15600	5200
	303L3	**321**	3.1	2000	0.71	9.0	71 ... 160	22500	25700	43300	51400	16400	5200
	303L3	**389**	2.6	1750	0.52	9.0	71 ... 160	23100	26400	44500	52800	17500	5200
	303L3	**402**	2.5	2080	0.59	9.0	71 ... 160	23200	26500	44700	53000	17700	5200
	303L4	**413**	2.4	2530	0.72	7.2	71 ... 160	23300	26600	44900	53200	17900	5200
	303L4	**446**	2.2	2830	0.75	7.2	71 ... 160	23500	26900	45400	53800	18300	5200
	303L4	**492**	2.0	2720	0.65	7.2	71 ... 160	23900	27300	46100	54600	19000	5200
	303L4	**556**	1.8	2870	0.61	7.2	71 ... 160	24300	27800	46900	55600	19700	5200
	303L4	**649**	1.5	2360	0.43	7.2	71 ... 160	24800	28400	47900	56800	20800	5200
	303L4	**718**	1.4	2300	0.38	7.2	71 ... 160	25200	28800	48600	57600	21500	5200
	303L4	**816**	1.2	2750	0.40	7.2	71 ... 160	25700	29300	49500	58700	22400	5200
	303L4	**896**	1.1	2390	0.32	7.2	71 ... 160	26000	29700	50200	59500	23100	5200
	303L4	**1018**	0.98	2770	0.32	7.2	71 ... 160	26500	30300	51100	60600	24000	5200
	303L4	**1098**	0.91	2440	0.26	7.2	71 ... 160	26800	30600	51700	61200	24000	5200
	303L4	**1278**	0.78	2850	0.26	7.2	71 ... 160	27400	31300	52800	62600	24000	5200
	303L4	**1370**	0.73	2440	0.21	7.2	71 ... 160	27600	31600	53300	63200	24000	5200
	303L4	**1586**	0.63	2250	0.17	7.2	71 ... 160	28200	32300	54400	64500	24000	5200
	303L4	**1854**	0.54	2440	0.16	7.2	71 ... 160	28900	33000	55700	66000	24000	5200
	303L4	**1991**	0.50	2850	0.17	7.2	71 ... 160	29200	33300	56200	66700	24000	5200
	303L4	**2243**	0.45	2000	0.11	7.2	71 ... 160	29700	33900	57200	67800	24000	5200
	303L4	**2799**	0.36	2000	0.08	7.2	71 ... 160	30600	35000	59000	70000	24000	5200
500	**303L1**	**3.60**	139	1920	28.8	22.0	132 ... 200	8740	9980	18400	21800	4630	5200
	303L1	**4.25**	118	1990	25.3	22.0	132 ... 200	9230	10600	19300	22900	4900	5200
	303L1	**5.33**	94	2040	20.6	22.0	132 ... 200	9960	11400	20700	24500	5280	5200
	303L1	**6.20**	81	1820	15.8	22.0	132 ... 200	10500	12000	21700	25700	5560	5200
	303L1	**7.50**	67	1590	11.4	22.0	132 ... 200	11200	12800	22900	27200	5920	5200
	303L1	**9.67**	52	860	4.8	22.0	132 ... 200	12100	13900	24700	29300	6440	5200
	303L2	**12.5**	40	2150	9.6	18.0	71 ... 160	13200	15100	26700	31700	7020	5200
	303L2	**15.3**	33	2150	7.8	18.0	71 ... 160	14200	16200	28400	33700	7510	5200
	303L2	**18.1**	27.6	2460	7.5	18.0	71 ... 160	15000	17100	29900	35400	7940	5200
	303L2	**20.8**	24.1	2110	5.7	18.0	71 ... 160	15700	17900	31100	36900	8310	5200
	303L2	**22.7**	22.0	2170	5.3	18.0	71 ... 160	16100	18500	32000	37900	8570	5200
	303L2	**24.5**	20.4	2460	5.6	18.0	71 ... 160	16600	18900	32700	38800	8780	5200
	303L2	**26.4**	18.9	1820	3.8	18.0	71 ... 160	17000	19400	33500	39600	9010	5200

B

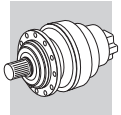

303 L — 266 — 2970 Nm

n_1 min^{-1}		i	n_2 min^{-1}	M_{n2} Nm	P_{n1} kW	P_t kW	P (IEC)	Rn_2 [N] MC	MZ	HC/PC	HZ/PZ	FZ	$M_{2\,max}$ Nm
500	**303L2**	**30.8**	16.3	2180	3.9	18.0	71 ... 160	17900	20400	35000	41500	9480	5200
	303L2	**35.8**	14.0	1820	2.8	18.0	71 ... 160	18800	21500	36600	43400	9960	5200
	303L2	**38.4**	13.0	2190	3.2	18.0	71 ... 160	19200	22000	37400	44300	10200	5200
	303L2	**44.6**	11.2	1820	2.3	18.0	71 ... 160	20200	23100	39100	46400	10700	5200
	303L2	**55.8**	9.0	1820	1.8	18.0	71 ... 160	21000	24000	40500	48000	11600	5200
	303L3	**53.4**	9.4	2310	2.5	15.0	71 ... 160	21000	24000	40500	48000	11400	5200
	303L3	**63.1**	7.9	2700	2.5	15.0	71 ... 160	21000	24000	40500	48000	12000	5200
	303L3	**72.3**	6.9	2310	1.8	15.0	71 ... 160	21000	24000	40500	48000	12600	5200
	303L3	**77.2**	6.5	2750	2.0	15.0	71 ... 160	21000	24000	40500	48000	12900	5200
	303L3	**90.2**	5.5	2310	1.5	15.0	71 ... 160	21000	24000	40500	48000	13600	5200
	303L3	**105**	4.8	2810	1.5	15.0	71 ... 160	21100	24200	40800	48300	14200	5200
	303L3	**113**	4.4	1880	0.96	15.0	71 ... 160	21400	24400	41200	48800	14600	5200
	303L3	**124**	4.0	1910	0.88	15.0	71 ... 160	21700	24800	41800	49500	15100	5200
	303L3	**141**	3.5	2670	1.1	15.0	71 ... 160	22100	25200	42600	50400	15800	5200
	303L3	**152**	3.3	1980	0.75	15.0	71 ... 160	22300	25500	43000	51000	16200	5200
	303L3	**164**	3.1	2430	0.85	15.0	71 ... 160	22500	25800	43500	51500	16500	5200
	303L3	**178**	2.8	2470	0.80	15.0	71 ... 160	22800	26100	44000	52100	17000	5200
	303L3	**190**	2.6	2060	0.62	15.0	71 ... 160	23000	26300	44400	52600	17400	5200
	303L3	**220**	2.3	2210	0.57	15.0	71 ... 160	23500	26900	45300	53700	18300	5200
	303L3	**258**	1.9	2170	0.48	15.0	71 ... 160	24000	27500	46400	54900	19200	5200
	303L3	**276**	1.8	2580	0.54	15.0	71 ... 160	24300	27800	46800	55500	19700	5200
	303L3	**321**	1.6	2260	0.40	15.0	71 ... 160	24800	28400	47900	56700	20700	5200
	303L3	**389**	1.3	1930	0.28	15.0	71 ... 160	25500	29100	49200	58300	22100	5200
	303L3	**402**	1.2	2350	0.34	15.0	71 ... 160	25600	29300	49400	58500	22300	5200
	303L4	**413**	1.2	2780	0.40	12.0	71 ... 160	25700	29400	49600	58800	22500	5200
	303L4	**446**	1.1	2950	0.39	12.0	71 ... 160	26000	29700	50100	59400	23100	5200
	303L4	**492**	1.0	2770	0.33	12.0	71 ... 160	26400	30100	50900	60300	23900	5200
	303L4	**556**	0.90	2970	0.32	12.0	71 ... 160	26800	30700	51700	61300	24000	5200
	303L4	**649**	0.77	2410	0.22	12.0	71 ... 160	27400	31400	52900	62700	24000	5200
	303L4	**718**	0.70	2440	0.20	12.0	71 ... 160	27800	31800	53700	63600	24000	5200
	303L4	**816**	0.61	2770	0.20	12.0	71 ... 160	28300	32400	54700	64800	24000	5200
	303L4	**896**	0.56	2440	0.16	12.0	71 ... 160	28700	32800	55400	65700	24000	5200
	303L4	**1018**	0.49	2770	0.16	12.0	71 ... 160	29300	33400	56400	66900	24000	5200
	303L4	**1098**	0.46	2440	0.13	12.0	71 ... 160	29600	33800	57000	67600	24000	5200
	303L4	**1278**	0.39	2850	0.13	12.0	71 ... 160	30200	34500	58300	69100	24000	5200
	303L4	**1370**	0.36	2440	0.11	12.0	71 ... 160	30500	34900	58900	69800	24000	5200
	303L4	**1586**	0.32	2250	0.08	12.0	71 ... 160	31200	35600	60100	71200	24000	5200
	303L4	**1854**	0.27	2440	0.08	12.0	71 ... 160	31900	36400	61500	72800	24000	5200
	303L4	**1991**	0.25	2850	0.08	12.0	71 ... 160	32200	36800	62100	73600	24000	5200
	303L4	**2243**	0.22	2000	0.05	12.0	71 ... 160	32700	37400	63200	74000	24000	5200
	303L4	**2799**	0.18	2000	0.04	12.0	71 ... 160	33800	38600	64000	74000	24000	5200

304 L — 278 — 3960 Nm

n_1 min^{-1}		i	n_2 min^{-1}	M_{n2} Nm	P_{n1} kW	P_t kW	P (IEC)	Rn_2 [N] MC	MZ	HC/PC	HZ/PZ	FZ	$M_{2\,max}$ Nm
1500	**304L1**	**3.60**	417	1840	50	12.0	132 ... 200	6060	6920	13200	15700	3210	7300
	304L1	**4.25**	353	1900	50	12.0	132 ... 200	6400	7320	13900	16500	3400	7300
	304L1	**5.33**	281	1990	50	12.0	132 ... 200	6910	7890	14900	17600	3660	7300
	304L1	**6.57**	228	1870	46	12.0	132 ... 200	7400	8460	15800	18800	3930	7300
	304L2	**12.5**	120	2680	30	9.0	71 ... 160	9180	10500	19200	22800	4870	7300
	304L2	**15.3**	98	2840	30	9.0	71 ... 160	9820	11200	20400	24200	5210	7300
	304L2	**18.1**	83	2940	27.1	9.0	71 ... 160	10400	11900	21500	25500	5510	7300
	304L2	**20.8**	72	2960	23.8	9.0	71 ... 160	10900	12400	22400	26500	5760	7300
	304L2	**22.7**	66	2790	20.5	9.0	71 ... 160	11200	12800	23000	27300	5940	7300
	304L2	**24.5**	61	3230	22.0	9.0	71 ... 160	11500	13100	23500	27900	6090	7300
	304L2	**30.8**	49	2850	15.5	9.0	71 ... 160	12400	14200	25200	29800	6570	7300
	304L2	**38.4**	39	2850	12.4	9.0	71 ... 160	13300	15200	26900	31900	7070	7300
	304L2	**47.3**	32	2390	8.4	9.0	71 ... 160	14300	16300	28700	34000	7580	7300

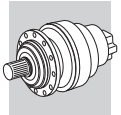

304 L	278	3960 Nm

n_1 min^{-1}		i	n_2 min^{-1}	M_{n2} Nm	P_{n1} kW	P_t kW	P (IEC)	Rn_2 [N] MC	MZ	HC/PC	HZ/PZ	FZ	$M_{2\,max}$ Nm
1500	**304L2**	**59.1**	25.4	2390	6.7	9.0	71 ... 160	15400	17600	30600	36300	8170	7300
	304L3	**43.6**	34	3190	12.6	7.5	71 ... 160	13900	15900	28000	33100	7380	7300
	304L3	**53.4**	28.1	3230	10.4	7.5	71 ... 160	14900	17000	29700	35200	7900	7300
	304L3	**63.1**	23.8	3480	9.5	7.5	71 ... 160	15700	18000	31200	37000	8340	7300
	304L3	**72.3**	20.8	3290	7.8	7.5	71 ... 160	16500	18800	32500	38600	8730	7300
	304L3	**77.2**	19.4	3490	7.8	7.5	71 ... 160	16800	19200	33200	39300	8930	7300
	304L3	**90.2**	16.6	3320	6.3	7.5	71 ... 160	17700	20300	34800	41200	9400	7300
	304L3	**105**	14.4	3520	5.8	7.5	71 ... 160	18600	21300	36300	43100	9880	7300
	304L3	**111**	13.6	3380	5.3	7.5	71 ... 160	19000	21700	37000	43800	10100	7300
	304L3	**130**	11.5	3530	4.7	7.5	71 ... 160	20000	22900	38800	46000	10600	7300
	304L3	**141**	10.6	3540	4.3	7.5	71 ... 160	20600	23500	39800	47200	10900	7300
	304L3	**150**	10.0	3440	4.0	7.5	71 ... 160	21000	24000	40500	48000	11100	7300
	304L3	**165**	9.1	2390	2.5	7.5	71 ... 160	21000	24000	40500	48000	11500	7300
	304L3	**178**	8.5	2850	2.8	7.5	71 ... 160	21000	24000	40500	48000	11800	7300
	304L3	**202**	7.4	2390	2.0	7.5	71 ... 160	21000	24000	40500	48000	12300	7300
	304L3	**220**	6.8	3610	2.8	7.5	71 ... 160	21000	24000	40500	48000	12700	7300
	304L3	**273**	5.5	2390	1.5	7.5	71 ... 160	21000	24000	40500	48000	13600	7300
	304L3	**341**	4.4	2420	1.2	7.5	71 ... 160	21400	24400	41300	48900	14700	7300
	304L3	**426**	3.5	2470	1.0	7.5	71 ... 160	22100	25200	42600	50500	15800	7300
	304L4	**413**	3.6	3000	1.3	6.0	71 ... 160	22000	25100	42400	50200	15600	7300
	304L4	**446**	3.4	3720	1.5	6.0	71 ... 160	22200	25400	42900	50800	16000	7300
	304L4	**492**	3.0	3730	1.3	6.0	71 ... 160	22500	25800	43500	51500	16600	7300
	304L4	**556**	2.7	3740	1.2	6.0	71 ... 160	22900	26200	44200	52400	17200	7300
	304L4	**649**	2.3	3540	0.97	6.0	71 ... 160	23400	26800	45200	53600	18200	7300
	304L4	**702**	2.1	2630	0.66	6.0	71 ... 160	23700	27100	45700	54200	18600	7300
	304L4	**816**	1.8	3820	0.83	6.0	71 ... 160	24200	27700	46700	55400	19600	7300
	304L4	**1018**	1.5	3870	0.67	6.0	71 ... 160	25000	28600	48200	57200	21100	7300
	304L4	**1164**	1.3	2870	0.44	6.0	71 ... 160	25500	29100	49200	58300	22100	7300
	304L4	**1271**	1.2	3920	0.55	6.0	71 ... 160	25800	29500	49800	59000	22700	7300
	304L4	**1344**	1.1	3690	0.49	6.0	71 ... 160	26000	29700	50200	59500	23100	7300
	304L4	**1586**	0.95	3960	0.44	6.0	71 ... 160	26600	30400	51400	60900	24000	7300
	304L4	**1815**	0.83	3000	0.29	6.0	71 ... 160	27200	31000	52400	62100	24000	7300
	304L4	**1991**	0.75	3740	0.33	6.0	71 ... 160	27500	31500	53100	62900	24000	7300
	304L4	**2269**	0.66	3000	0.23	6.0	71 ... 160	28000	32000	54100	64100	24000	7300
	304L4	**2453**	0.61	3000	0.22	6.0	71 ... 160	28400	32400	54700	64800	24000	7300
1000	**304L1**	**3.60**	278	2080	50	14.4	132 ... 200	6930	7920	14900	17700	3680	7300
	304L1	**4.25**	235	2150	50	14.4	132 ... 200	7330	8380	15700	18600	3890	7300
	304L1	**5.33**	188	2240	45	14.4	132 ... 200	7900	9030	16800	19900	4190	7300
	304L1	**6.57**	152	2110	35	14.4	132 ... 200	8470	9680	17900	21200	4500	7300
	304L2	**12.5**	80	2920	25.9	10.8	71 ... 160	10500	12000	21700	25700	5570	7300
	304L2	**15.3**	65	3010	21.8	10.8	71 ... 160	11200	12800	23100	27400	5960	7300
	304L2	**18.1**	55	3330	20.4	10.8	71 ... 160	11900	13600	24300	28800	6300	7300
	304L2	**20.8**	48	3130	16.8	10.8	71 ... 160	12400	14200	25300	30000	6600	7300
	304L2	**22.7**	44	2850	13.9	10.8	71 ... 160	12800	14600	26000	30800	6800	7300
	304L2	**24.5**	41	3440	15.6	10.8	71 ... 160	13100	15000	26600	31500	6970	7300
	304L2	**30.8**	33	2850	10.3	10.8	71 ... 160	14200	16200	28400	33700	7520	7300
	304L2	**38.4**	26.0	2850	8.3	10.8	71 ... 160	15300	17400	30400	36000	8100	7300
	304L2	**47.3**	21.1	2390	5.6	10.8	71 ... 160	16400	18700	32400	38300	8680	7300
	304L2	**59.1**	16.9	2390	4.5	10.8	71 ... 160	17600	20100	34600	41000	9350	7300
	304L3	**43.6**	22.9	3270	8.6	9.0	71 ... 160	15900	18200	31600	37400	8450	7300
	304L3	**53.4**	18.7	3310	7.1	9.0	71 ... 160	17000	19500	33600	39800	9040	7300
	304L3	**63.1**	15.9	3510	6.4	9.0	71 ... 160	18000	20600	35300	41800	9550	7300
	304L3	**72.3**	13.8	3370	5.4	9.0	71 ... 160	18800	21500	36700	43500	10000	7300
	304L3	**77.2**	12.9	3520	5.2	9.0	71 ... 160	19300	22000	37500	44400	10200	7300
	304L3	**90.2**	11.1	3420	4.3	9.0	71 ... 160	20300	23200	39300	46500	10800	7300
	304L3	**105**	9.6	3550	3.9	9.0	71 ... 160	21000	24000	40500	48000	11300	7300
	304L3	**111**	9.0	3450	3.6	9.0	71 ... 160	21000	24000	40500	48000	11500	7300
	304L3	**130**	7.7	3600	3.2	9.0	71 ... 160	21000	24000	40500	48000	12200	7300
	304L3	**141**	7.1	3610	2.9	9.0	71 ... 160	21000	24000	40500	48000	12500	7300
	304L3	**150**	6.7	3470	2.7	9.0	71 ... 160	21000	24000	40500	48000	12700	7300

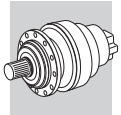

304 L

278

3960 Nm

n_1 min^{-1}		i	n_2 min^{-1}	M_{n2} Nm	P_{n1} kW	P_t kW	P (IEC)	Rn_2 [N] MC	MZ	HC/PC	HZ/PZ	FZ	$M_{2\,max}$ Nm
1000	**304L3**	**165**	6.1	2390	1.7	9.0	71 ... 160	21000	24000	40500	48000	13200	7300
	304L3	**178**	5.6	2850	1.8	9.0	71 ... 160	21000	24000	40500	48000	13500	7300
	304L3	**202**	5.0	2390	1.4	9.0	71 ... 160	21000	24000	40500	48100	14100	7300
	304L3	**220**	4.5	3670	1.9	9.0	71 ... 160	21300	24300	41100	48700	14500	7300
	304L3	**273**	3.7	2460	1.0	9.0	71 ... 160	22000	25100	42300	50200	15600	7300
	304L3	**341**	2.9	2520	0.85	9.0	71 ... 160	22700	25900	43700	51800	16800	7300
	304L3	**426**	2.3	2590	0.70	9.0	71 ... 160	23400	26700	45100	53500	18100	7300
	304L4	**413**	2.4	3210	0.92	7.2	71 ... 160	23300	26600	44900	53200	17900	7300
	304L4	**446**	2.2	3770	1.0	7.2	71 ... 160	23500	26900	45400	53800	18300	7300
	304L4	**492**	2.0	3800	0.91	7.2	71 ... 160	23900	27300	46100	54600	19000	7300
	304L4	**556**	1.8	3820	0.81	7.2	71 ... 160	24300	27800	46900	55600	19700	7300
	304L4	**649**	1.5	3620	0.66	7.2	71 ... 160	24800	28400	47900	56800	20800	7300
	304L4	**702**	1.4	2820	0.48	7.2	71 ... 160	25100	28700	48500	57400	21300	7300
	304L4	**816**	1.2	3910	0.57	7.2	71 ... 160	25700	29300	49500	58700	22400	7300
	304L4	**1018**	0.98	3960	0.46	7.2	71 ... 160	26500	30300	51100	60600	24000	7300
	304L4	**1164**	0.86	3000	0.30	7.2	71 ... 160	27000	30900	52100	61700	24000	7300
	304L4	**1271**	0.79	3960	0.37	7.2	71 ... 160	27300	31300	52700	62500	24000	7300
	304L4	**1344**	0.74	3710	0.33	7.2	71 ... 160	27600	31500	53200	63000	24000	7300
	304L4	**1586**	0.63	3960	0.30	7.2	71 ... 160	28200	32300	54400	64500	24000	7300
	304L4	**1815**	0.55	3000	0.20	7.2	71 ... 160	28800	32900	55500	65800	24000	7300
	304L4	**1991**	0.50	3740	0.22	7.2	71 ... 160	29200	33300	56200	66700	24000	7300
	304L4	**2269**	0.44	3000	0.16	7.2	71 ... 160	29700	34000	57300	67900	24000	7300
	304L4	**2453**	0.41	3000	0.14	7.2	71 ... 160	30000	34300	57900	68700	24000	7300
500	**304L1**	**3.60**	139	2560	38	24.0	132 ... 200	8740	9980	18400	21800	4630	7300
	304L1	**4.25**	118	2650	34	24.0	132 ... 200	9230	10600	19300	22900	4900	7300
	304L1	**5.33**	94	2720	27.6	24.0	132 ... 200	9960	11400	20700	24500	5280	7300
	304L1	**6.57**	76	2390	19.6	24.0	132 ... 200	10700	12200	22000	26100	5660	7300
	304L2	**12.5**	40	3160	14.0	18.0	71 ... 160	13200	15100	26700	31700	7020	7300
	304L2	**15.3**	33	3200	11.6	18.0	71 ... 160	14200	16200	28400	33700	7510	7300
	304L2	**18.1**	27.6	3470	10.7	18.0	71 ... 160	15000	17100	29900	35400	7940	7300
	304L2	**20.8**	24.1	3260	8.7	18.0	71 ... 160	15700	17900	31100	36900	8310	7300
	304L2	**22.7**	22.0	2850	7.0	18.0	71 ... 160	16100	18500	32000	37900	8570	7300
	304L2	**24.5**	20.4	3490	7.9	18.0	71 ... 160	16600	18900	32700	38800	8780	7300
	304L2	**30.8**	16.3	2850	5.2	18.0	71 ... 160	17900	20400	35000	41500	9480	7300
	304L2	**38.4**	13.0	2850	4.1	18.0	71 ... 160	19200	22000	37400	44300	10200	7300
	304L2	**47.3**	10.6	2390	2.8	18.0	71 ... 160	20600	23600	39800	47200	10900	7300
	304L2	**59.1**	8.5	2390	2.2	18.0	71 ... 160	21000	24000	40500	48000	11800	7300
	304L3	**43.6**	11.5	3410	4.5	15.0	71 ... 160	20100	22900	38900	46100	10600	7300
	304L3	**53.4**	9.4	3450	3.7	15.0	71 ... 160	21000	24000	40500	48000	11400	7300
	304L3	**63.1**	7.9	3590	3.3	15.0	71 ... 160	21000	24000	40500	48000	12000	7300
	304L3	**72.3**	6.9	3470	2.8	15.0	71 ... 160	21000	24000	40500	48000	12600	7300
	304L3	**77.2**	6.5	3630	2.7	15.0	71 ... 160	21000	24000	40500	48000	12900	7300
	304L3	**90.2**	5.5	3490	2.2	15.0	71 ... 160	21000	24000	40500	48000	13600	7300
	304L3	**105**	4.8	3690	2.0	15.0	71 ... 160	21100	24200	40800	48300	14200	7300
	304L3	**111**	4.5	3500	1.8	15.0	71 ... 160	21300	24300	41100	48700	14500	7300
	304L3	**130**	3.8	3710	1.6	15.0	71 ... 160	21800	24900	42100	49900	15300	7300
	304L3	**141**	3.5	3720	1.5	15.0	71 ... 160	22100	25200	42600	50400	15800	7300
	304L3	**150**	3.3	3510	1.3	15.0	71 ... 160	22200	25400	42900	50800	16000	7300
	304L3	**165**	3.0	2510	0.87	15.0	71 ... 160	22600	25800	43500	51500	16600	7300
	304L3	**178**	2.8	3130	1.0	15.0	71 ... 160	22800	26100	44000	52100	17000	7300
	304L3	**202**	2.5	2560	0.73	15.0	71 ... 160	23200	26500	44800	53100	17700	7300
	304L3	**220**	2.3	3740	0.97	15.0	71 ... 160	23500	26900	45300	53700	18300	7300
	304L3	**273**	1.8	2700	0.57	15.0	71 ... 160	24200	27700	46700	55400	19600	7300
	304L3	**341**	1.5	2810	0.47	15.0	71 ... 160	25000	28600	48300	57200	21100	7300
	304L3	**426**	1.2	2920	0.39	15.0	71 ... 160	25800	29500	49800	59000	22700	7300
	304L4	**413**	1.2	3620	0.52	12.0	71 ... 160	25700	29400	49600	58800	22500	7300
	304L4	**446**	1.1	3930	0.52	12.0	71 ... 160	26000	29700	50100	59400	23100	7300
	304L4	**492**	1.0	3960	0.48	12.0	71 ... 160	26400	30100	50900	60300	23900	7300
	304L4	**556**	0.90	3960	0.42	12.0	71 ... 160	26800	30700	51700	61300	24000	7300
	304L4	**649**	0.77	3710	0.34	12.0	71 ... 160	27400	31400	52900	62700	24000	7300

B

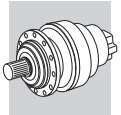

304 L — 278 — 3960 Nm

n_1 min^{-1}		i	n_2 min^{-1}	M_{n2} Nm	P_{n1} kW	P_t kW	P (IEC)	Rn_2 [N] MC	MZ	HC/PC	HZ/PZ	FZ	$M_{2\,max}$ Nm
500	**304L4**	**702**	0.71	3000	0.25	12.0	71 ... 160	27700	31700	53500	63400	24000	7300
	304L4	**816**	0.61	3960	0.29	12.0	71 ... 160	28300	32400	54700	64800	24000	7300
	304L4	**1018**	0.49	3960	0.23	12.0	71 ... 160	29300	33400	56400	66900	24000	7300
	304L4	**1164**	0.43	3000	0.15	12.0	71 ... 160	29800	34100	57500	68200	24000	7300
	304L4	**1271**	0.39	3960	0.18	12.0	71 ... 160	30200	34500	58200	69000	24000	7300
	304L4	**1344**	0.37	3710	0.16	12.0	71 ... 160	30400	34800	58700	69600	24000	7300
	304L4	**1586**	0.32	3960	0.15	12.0	71 ... 160	31200	35600	60100	71200	24000	7300
	304L4	**1815**	0.28	3000	0.10	12.0	71 ... 160	31800	36300	61300	72600	24000	7300
	304L4	**1991**	0.25	3740	0.11	12.0	71 ... 160	32200	36800	62100	73600	24000	7300
	304L4	**2269**	0.22	3000	0.08	12.0	71 ... 160	32800	37500	63300	74000	24000	7300
	304L4	**2453**	0.20	3000	0.07	12.0	71 ... 160	33200	37900	64000	74000	24000	7300

B

305 L — 290 — 5800 Nm

n_1 min^{-1}		i	n_2 min^{-1}	M_{n2} Nm	P_{n1} kW	P_t kW	P (IEC)	Rn_2 [N] MC	MZ	HC/PC	HZ/PZ	FZ	$M_{2\,max}$ Nm
1500	**305L1**	**3.60**	417	2370	60	13.0	132 ... 200	6060	6920	13200	15700	3210	8800
	305L1	**4.25**	353	2450	60	13.0	132 ... 200	6400	7320	13900	16500	3400	8800
	305L1	**5.33**	281	2560	60	13.0	132 ... 200	6910	7890	14900	17600	3660	8800
	305L1	**6.20**	242	2650	60	13.0	132 ... 200	7260	8300	15600	18500	3850	8800
	305L1	**7.50**	200	2270	49	13.0	132 ... 200	7740	8840	16500	19500	4100	8800
	305L2	**12.5**	120	2930	30	9.0	71 ... 160	9180	10500	19200	22800	4870	8800
	305L2	**15.3**	98	3060	30	9.0	71 ... 160	9820	11200	20400	24200	5210	8800
	305L2	**18.1**	83	3620	30	9.0	71 ... 160	10400	11900	21500	25500	5510	8800
	305L2	**20.8**	72	3250	26.1	9.0	71 ... 160	10900	12400	22400	26500	5760	8800
	305L2	**22.7**	66	3940	29.0	9.0	71 ... 160	11200	12800	23000	27300	5940	8800
	305L2	**24.5**	61	3830	26.1	9.0	71 ... 160	11500	13100	23500	27900	6090	8800
	305L2	**26.4**	57	3530	22.3	9.0	71 ... 160	11800	13500	24100	28500	6250	8800
	305L2	**30.8**	49	4280	23.2	9.0	71 ... 160	12400	14200	25200	29800	6570	8800
	305L2	**35.8**	42	3560	16.6	9.0	71 ... 160	13000	14900	26300	31200	6910	8800
	305L2	**38.4**	39	4300	18.7	9.0	71 ... 160	13300	15200	26900	31900	7070	8800
	305L2	**44.6**	34	3560	13.3	9.0	71 ... 160	14000	16000	28200	33400	7440	8800
	305L2	**55.8**	26.9	3540	10.6	9.0	71 ... 160	15100	17300	30100	35700	8010	8800
	305L3	**53.4**	28.1	4000	12.9	7.5	71 ... 160	14900	17000	29700	35200	7900	8800
	305L3	**63.1**	23.8	4720	12.9	7.5	71 ... 160	15700	18000	31200	37000	8340	8800
	305L3	**72.3**	20.8	4160	9.9	7.5	71 ... 160	16500	18800	32500	38600	8730	8800
	305L3	**77.2**	19.4	4820	10.7	7.5	71 ... 160	16800	19200	33200	39300	8930	8800
	305L3	**90.2**	16.6	4260	8.1	7.5	71 ... 160	17700	20300	34800	41200	9400	8800
	305L3	**105**	14.4	5030	8.3	7.5	71 ... 160	18600	21300	36300	43100	9880	8800
	305L3	**113**	13.3	3590	5.5	7.5	71 ... 160	19100	21800	37200	44100	10100	8800
	305L3	**124**	12.1	3590	5.0	7.5	71 ... 160	19700	22600	38300	45400	10500	8800
	305L3	**141**	10.6	5180	6.3	7.5	71 ... 160	20600	23500	39800	47200	10900	8800
	305L3	**152**	9.8	3600	4.1	7.5	71 ... 160	21000	24000	40500	48000	11200	8800
	305L3	**164**	9.2	4410	4.6	7.5	71 ... 160	21000	24000	40500	48000	11500	8800
	305L3	**178**	8.5	4420	4.3	7.5	71 ... 160	21000	24000	40500	48000	11800	8800
	305L3	**190**	7.9	3600	3.3	7.5	71 ... 160	21000	24000	40500	48000	12100	8800
	305L3	**220**	6.8	4750	3.7	7.5	71 ... 160	21000	24000	40500	48000	12700	8800
	305L3	**258**	5.8	3600	2.4	7.5	71 ... 160	21000	24000	40500	48000	13300	8800
	305L3	**276**	5.4	4460	2.8	7.5	71 ... 160	21000	24000	40500	48000	13700	8800
	305L3	**321**	4.7	3640	1.9	7.5	71 ... 160	21200	24200	40900	48500	14400	8800
	305L3	**389**	3.9	3170	1.4	7.5	71 ... 160	21800	24900	42000	49800	15300	8800
	305L3	**402**	3.7	3760	1.6	6.0	71 ... 160	21900	25000	42200	50000	15500	8800
	305L4	**413**	3.6	4720	2.0	6.0	71 ... 160	22000	25100	42400	50200	15600	8800
	305L4	**446**	3.4	5490	2.2	6.0	71 ... 160	22200	25400	42900	50800	16000	8800
	305L4	**492**	3.0	5340	1.9	6.0	71 ... 160	22500	25800	43500	51500	16600	8800
	305L4	**556**	2.7	5500	1.8	6.0	71 ... 160	22900	26200	44200	52400	17200	8800
	305L4	**649**	2.3	4510	1.2	6.0	71 ... 160	23400	26800	45200	53600	18200	8800
	305L4	**718**	2.1	4130	1.0	6.0	71 ... 160	23800	27200	45900	54400	18800	8800
	305L4	**816**	1.8	5410	1.2	6.0	71 ... 160	24200	27700	46700	55400	19600	8800

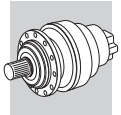

305 L

290

5800 Nm

n_1 min^{-1}		i	n_2 min^{-1}	M_{n2} Nm	P_{n1} kW	P_t kW	P (IEC)	Rn_2 [N] MC	MZ	HC/PC	HZ/PZ	FZ	$M_{2\,max}$ Nm
1500	**305L4**	**896**	1.7	4290	0.85	6.0	71 ... 160	24600	28100	47400	56100	20200	8800
	305L4	**1018**	1.5	5450	0.95	6.0	71 ... 160	25000	28600	48200	57200	21100	8800
	305L4	**1098**	1.4	4440	0.72	6.0	71 ... 160	25300	28900	48700	57800	21600	8800
	305L4	**1278**	1.2	5500	0.76	6.0	71 ... 160	25800	29500	49800	59000	22800	8800
	305L4	**1370**	1.1	4620	0.60	6.0	71 ... 160	26100	29800	50300	59600	23300	8800
	305L4	**1586**	0.95	4750	0.53	6.0	71 ... 160	26600	30400	51400	60900	24000	8800
	305L4	**1854**	0.81	4690	0.45	6.0	71 ... 160	27200	31100	52500	62300	24000	8800
	305L4	**1991**	0.75	5600	0.50	6.0	71 ... 160	27500	31500	53100	62900	24000	8800
	305L4	**2243**	0.67	3800	0.30	6.0	71 ... 160	28000	32000	54000	64000	24000	8800
	305L4	**2799**	0.54	3800	0.24	6.0	71 ... 160	28900	33000	55700	66000	24000	8800
1000	**305L1**	**3.60**	278	2680	60	15.6	132 ... 200	6930	7920	14900	17700	3680	8800
	305L1	**4.25**	235	2770	60	15.6	132 ... 200	7330	8380	15700	18600	3890	8800
	305L1	**5.33**	188	2890	58	15.6	132 ... 200	7900	9030	16800	19900	4190	8800
	305L1	**6.20**	161	3000	52	15.6	132 ... 200	8310	9500	17600	20800	4410	8800
	305L1	**7.50**	133	2560	37	15.6	132 ... 200	8860	10100	18600	22100	4700	8800
	305L2	**12.5**	80	3300	29.4	10.8	71 ... 160	10500	12000	21700	25700	5570	8800
	305L2	**15.3**	65	3460	25.1	10.8	71 ... 160	11200	12800	23100	27400	5960	8800
	305L2	**18.1**	55	4090	25.1	10.8	71 ... 160	11900	13600	24300	28800	6300	8800
	305L2	**20.8**	48	3650	19.5	10.8	71 ... 160	12400	14200	25300	30000	6600	8800
	305L2	**22.7**	44	4290	21.0	10.8	71 ... 160	12800	14600	26000	30800	6800	8800
	305L2	**24.5**	41	4200	19.1	10.8	71 ... 160	13100	15000	26600	31500	6970	8800
	305L2	**26.4**	38	3560	15.0	10.8	71 ... 160	13500	15400	27200	32200	7150	8800
	305L2	**30.8**	33	4310	15.6	10.8	71 ... 160	14200	16200	28400	33700	7520	8800
	305L2	**35.8**	28.0	3570	11.1	10.8	71 ... 160	14900	17000	29800	35300	7910	8800
	305L2	**38.4**	26.0	4330	12.5	10.8	71 ... 160	15300	17400	30400	36000	8100	8800
	305L2	**44.6**	22.4	3570	8.9	10.8	71 ... 160	16000	18300	31800	37700	8510	8800
	305L2	**55.8**	17.9	3560	7.1	10.8	71 ... 160	17300	19800	34000	40300	9170	8800
	305L3	**53.4**	18.7	4190	9.0	9.0	71 ... 160	17000	19500	33600	39800	9040	8800
	305L3	**63.1**	15.9	4980	9.1	9.0	71 ... 160	18000	20600	35300	41800	9550	8800
	305L3	**72.3**	13.8	4340	6.9	9.0	71 ... 160	18800	21500	36700	43500	10000	8800
	305L3	**77.2**	12.9	5110	7.6	9.0	71 ... 160	19300	22000	37500	44400	10200	8800
	305L3	**90.2**	11.1	4440	5.7	9.0	71 ... 160	20300	23200	39300	46500	10800	8800
	305L3	**105**	9.6	5310	5.8	9.0	71 ... 160	21000	24000	40500	48000	11300	8800
	305L3	**113**	8.9	3600	3.7	9.0	71 ... 160	21000	24000	40500	48000	11600	8800
	305L3	**124**	8.0	3600	3.3	9.0	71 ... 160	21000	24000	40500	48000	12000	8800
	305L3	**141**	7.1	5260	4.3	9.0	71 ... 160	21000	24000	40500	48000	12500	8800
	305L3	**152**	6.6	3600	2.7	9.0	71 ... 160	21000	24000	40500	48000	12800	8800
	305L3	**164**	6.1	4450	3.1	9.0	71 ... 160	21000	24000	40500	48000	13100	8800
	305L3	**178**	5.6	4460	2.9	9.0	71 ... 160	21000	24000	40500	48000	13500	8800
	305L3	**190**	5.3	3600	2.2	9.0	71 ... 160	21000	24000	40500	48000	13800	8800
	305L3	**220**	4.5	4750	2.5	9.0	71 ... 160	21300	24300	41100	48700	14500	8800
	305L3	**258**	3.9	3740	1.7	9.0	71 ... 160	21800	24900	42000	49800	15300	8800
	305L3	**276**	3.6	4670	1.9	9.0	71 ... 160	22000	25100	42400	50300	15600	8800
	305L3	**321**	3.1	3870	1.4	9.0	71 ... 160	22500	25700	43300	51400	16400	8800
	305L3	**389**	2.6	3290	0.97	9.0	71 ... 160	23100	26400	44500	52800	17500	8800
	305L3	**402**	2.5	4000	1.1	7.2	71 ... 160	23200	26500	44700	53000	17700	8800
	305L4	**413**	2.4	5060	1.4	7.2	71 ... 160	23300	26600	44900	53200	17900	8800
	305L4	**446**	2.2	5530	1.5	7.2	71 ... 160	23500	26900	45400	53800	18300	8800
	305L4	**492**	2.0	5390	1.3	7.2	71 ... 160	23900	27300	46100	54600	19000	8800
	305L4	**556**	1.8	5610	1.2	7.2	71 ... 160	24300	27800	46900	55600	19700	8800
	305L4	**649**	1.5	4600	0.84	7.2	71 ... 160	24800	28400	47900	56800	20800	8800
	305L4	**718**	1.4	4430	0.73	7.2	71 ... 160	25200	28800	48600	57600	21500	8800
	305L4	**816**	1.2	5490	0.80	7.2	71 ... 160	25700	29300	49500	58700	22400	8800
	305L4	**896**	1.1	4600	0.61	7.2	71 ... 160	26000	29700	50200	59500	23100	8800
	305L4	**1018**	0.98	5530	0.64	7.2	71 ... 160	26500	30300	51100	60600	24000	8800
	305L4	**1098**	0.91	4690	0.51	7.2	71 ... 160	26800	30600	51700	61200	24000	8800
	305L4	**1278**	0.78	5600	0.52	7.2	71 ... 160	27400	31300	52800	62600	24000	8800
	305L4	**1370**	0.73	4690	0.40	7.2	71 ... 160	27600	31600	53300	63200	24000	8800
	305L4	**1586**	0.63	4750	0.35	7.2	71 ... 160	28200	32300	54400	64500	24000	8800
	305L4	**1854**	0.54	4690	0.30	7.2	71 ... 160	28900	33000	55700	66000	24000	8800
	305L4	**1991**	0.50	5600	0.33	7.2	71 ... 160	29200	33300	56200	66700	24000	8800

B

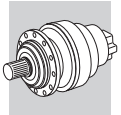

305 L	290	5800 Nm

n_1 min^{-1}		i	n_2 min^{-1}	M_{n2} Nm	P_{n1} kW	P_t kW	P (IEC)	Rn_2 [N] MC	MZ	HC/PC	HZ/PZ	FZ	$M_{2\,max}$ Nm
1000	**305L4**	**2243**	0.45	3800	0.20	7.2	71 ... 160	29700	33900	57200	67800	24000	8800
	305L4	**2799**	0.36	3800	0.16	7.2	71 ... 160	30600	35000	59000	70000	24000	8800
500	**305L1**	**3.60**	139	3300	49	26.0	132 ... 200	8740	9980	18400	21800	4630	8800
	305L1	**4.25**	118	3410	43	26.0	132 ... 200	9230	10600	19300	22900	4900	8800
	305L1	**5.33**	94	3560	36	26.0	132 ... 200	9960	11400	20700	24500	5280	8800
	305L1	**6.20**	81	3490	30	26.0	132 ... 200	10500	12000	21700	25700	5560	8800
	305L1	**7.50**	67	2910	20.9	26.0	132 ... 200	11200	12800	22900	27200	5920	8800
	305L2	**12.5**	40	3890	17.3	18.0	71 ... 160	13200	15100	26700	31700	7020	8800
	305L2	**15.3**	33	3930	14.3	18.0	71 ... 160	14200	16200	28400	33700	7510	8800
	305L2	**18.1**	27.6	4580	14.1	18.0	71 ... 160	15000	17100	29900	35400	7940	8800
	305L2	**20.8**	24.1	3970	10.6	18.0	71 ... 160	15700	17900	31100	36900	8310	8800
	305L2	**22.7**	22.0	4340	10.6	18.0	71 ... 160	16100	18500	32000	37900	8570	8800
	305L2	**24.5**	20.4	4680	10.6	18.0	71 ... 160	16600	18900	32700	38800	8780	8800
	305L2	**26.4**	18.9	3580	7.5	18.0	71 ... 160	17000	19400	33500	39600	9010	8800
	305L2	**30.8**	16.3	4360	7.9	18.0	71 ... 160	17900	20400	35000	41500	9480	8800
	305L2	**35.8**	14.0	3590	5.6	18.0	71 ... 160	18800	21500	36600	43400	9960	8800
	305L2	**38.4**	13.0	4380	6.3	18.0	71 ... 160	19200	22000	37400	44300	10200	8800
	305L2	**44.6**	11.2	3600	4.5	18.0	71 ... 160	20200	23100	39100	46400	10700	8800
	305L2	**55.8**	9.0	3600	3.6	18.0	71 ... 160	21000	24000	40500	48000	11600	8800
	305L3	**53.4**	9.4	4490	4.8	15.0	71 ... 160	21000	24000	40500	48000	11400	8800
	305L3	**63.1**	7.9	5360	4.9	15.0	71 ... 160	21000	24000	40500	48000	12000	8800
	305L3	**72.3**	6.9	4490	3.6	15.0	71 ... 160	21000	24000	40500	48000	12600	8800
	305L3	**77.2**	6.5	5410	4.0	15.0	71 ... 160	21000	24000	40500	48000	12900	8800
	305L3	**90.2**	5.5	4490	2.9	15.0	71 ... 160	21000	24000	40500	48000	13600	8800
	305L3	**105**	4.8	5480	3.0	15.0	71 ... 160	21100	24200	40800	48300	14200	8800
	305L3	**113**	4.4	3670	1.9	15.0	71 ... 160	21400	24400	41200	48800	14600	8800
	305L3	**124**	4.0	3720	1.7	15.0	71 ... 160	21700	24800	41800	49500	15100	8800
	305L3	**141**	3.5	5320	2.2	15.0	71 ... 160	22100	25200	42600	50400	15800	8800
	305L3	**152**	3.3	3840	1.4	15.0	71 ... 160	22300	25500	43000	51000	16200	8800
	305L3	**164**	3.1	4870	1.7	15.0	71 ... 160	22500	25800	43500	51500	16500	8800
	305L3	**178**	2.8	4940	1.6	15.0	71 ... 160	22800	26100	44000	52100	17000	8800
	305L3	**190**	2.6	3970	1.2	15.0	71 ... 160	23000	26300	44400	52600	17400	8800
	305L3	**220**	2.3	4750	1.2	15.0	71 ... 160	23500	26900	45300	53700	18300	8800
	305L3	**258**	1.9	4180	0.93	15.0	71 ... 160	24000	27500	46400	54900	19200	8800
	305L3	**276**	1.8	5140	1.1	15.0	71 ... 160	24300	27800	46800	55500	19700	8800
	305L3	**321**	1.6	4340	0.78	15.0	71 ... 160	24800	28400	47900	56700	20700	8800
	305L3	**389**	1.3	3660	0.54	15.0	71 ... 160	25500	29100	49200	58300	22100	8800
	305L3	**402**	1.2	4520	0.64	12.0	71 ... 160	25600	29300	49400	58500	22300	8800
	305L4	**413**	1.2	5480	0.78	12.0	71 ... 160	25700	29400	49600	58800	22500	8800
	305L4	**446**	1.1	5760	0.76	12.0	71 ... 160	26000	29700	50100	59400	23100	8800
	305L4	**492**	1.0	5530	0.66	12.0	71 ... 160	26400	30100	50900	60300	23900	8800
	305L4	**556**	0.9	5800	0.62	12.0	71 ... 160	26800	30700	51700	61300	24000	8800
	305L4	**649**	0.77	4700	0.43	12.0	71 ... 160	27400	31400	52900	62700	24000	8800
	305L4	**718**	0.70	4690	0.39	12.0	71 ... 160	27800	31800	53700	63600	24000	8800
	305L4	**816**	0.61	5530	0.4	12.0	71 ... 160	28300	32400	54700	64800	24000	8800
	305L4	**896**	0.56	4690	0.31	12.0	71 ... 160	28700	32800	55400	65700	24000	8800
	305L4	**1018**	0.49	5530	0.32	12.0	71 ... 160	29300	33400	56400	66900	24000	8800
	305L4	**1098**	0.46	4690	0.25	12.0	71 ... 160	29600	33800	57000	67600	24000	8800
	305L4	**1278**	0.39	5600	0.26	12.0	71 ... 160	30200	34500	58300	69100	24000	8800
	305L4	**1370**	0.36	4690	0.2	12.0	71 ... 160	30500	34900	58900	69800	24000	8800
	305L4	**1586**	0.32	4750	0.18	12.0	71 ... 160	31200	35600	60100	71200	24000	8800
	305L4	**1854**	0.27	4690	0.15	12.0	71 ... 160	31900	36400	61500	72800	24000	8800
	305L4	**1991**	0.25	5600	0.17	12.0	71 ... 160	32200	36800	62100	73600	24000	8800
	305L4	**2243**	0.22	3800	0.1	12.0	71 ... 160	32700	37400	63200	74000	24000	8800
	305L4	**2799**	0.18	3800	0.08	12.0	71 ... 160	33800	38600	64000	74000	24000	8800

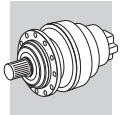

306 L

302

10840 Nm

n_1 min^{-1}		i	n_2 min^{-1}	M_{n2} Nm	P_{n1} kW	P_t kW	P (IEC)	Rn_2 [N] MC	MZ	HC/PC	HZ/PZ	FZ	$M_{2\,max}$ Nm
1500	**306L1**	**3.60**	417	3760	75	18.0	160 ... 250	7210	8220	18600	21500	4690	14900
	306L1	**4.25**	353	3890	75	18.0	160 ... 250	7620	8690	19600	22600	4950	14900
	306L1	**5.33**	281	4060	75	18.0	160 ... 250	8220	9370	20900	24200	5340	14900
	306L1	**6.20**	242	4200	75	18.0	160 ... 250	8640	9850	21900	25300	5620	14900
	306L1	**7.50**	200	4090	75	18.0	160 ... 250	9210	10500	23200	26800	5980	14900
	306L2	**13.0**	116	4820	40	13.0	132 ... 200	11100	12600	27300	31600	7180	14900
	306L2	**15.3**	98	4990	40	13.0	132 ... 200	11700	13300	28700	33200	7590	14900
	306L2	**18.1**	83	5890	40	13.0	132 ... 200	12300	14100	30200	34900	8020	14900
	306L2	**22.7**	66	6140	40	13.0	132 ... 200	13300	15200	32300	37300	8650	14900
	306L2	**26.4**	57	6370	40	13.0	132 ... 200	14000	16000	33800	39100	9100	14900
	306L2	**28.4**	53	6700	39	13.0	132 ... 200	14400	16400	34600	40000	9330	14900
	306L2	**33.1**	45	6870	35	13.0	132 ... 200	15100	17200	36200	41800	9810	14900
	306L2	**38.4**	39	6470	28.1	13.0	132 ... 200	15900	18100	37900	43700	10300	14900
	306L2	**46.5**	32	6470	23.2	13.0	132 ... 200	16900	19300	40100	46300	11000	14900
	306L2	**56.3**	26.7	5210	15.5	13.0	132 ... 200	18000	20600	42500	49000	11700	14900
	306L2	**72.5**	20.7	5290	12.2	13.0	132 ... 200	19600	22400	45800	52900	12700	14900
	306L3	**53.2**	28.2	7100	20.0	7.5	71 ... 160	17700	20200	41800	48200	11500	14900
	306L3	**65.2**	23.0	7480	19.7	7.5	71 ... 160	18900	21600	44400	51300	12300	14900
	306L3	**77.0**	19.5	8350	18.7	7.5	71 ... 160	20000	22800	46700	53900	13000	14900
	306L3	**81.9**	18.3	6890	14.5	7.5	71 ... 160	20400	23300	47500	54900	13300	14900
	306L3	**88.3**	17.0	8550	16.7	7.5	71 ... 160	20900	23900	48600	56100	13600	14900
	306L3	**104**	14.4	8900	14.7	7.5	71 ... 160	22100	25200	51100	59000	14400	14900
	306L3	**112**	13.4	7410	11.3	7.5	71 ... 160	22700	25900	52300	60300	14800	14900
	306L3	**121**	12.4	7790	11.1	7.5	71 ... 160	23300	26500	53500	61700	15100	14900
	306L3	**141**	10.6	7900	9.6	7.5	71 ... 160	24500	27900	55900	64600	15900	14900
	306L3	**152**	9.9	7590	8.6	7.5	71 ... 160	25000	28500	57000	65800	16300	14900
	306L3	**190**	7.9	6510	5.9	7.5	71 ... 160	25000	28500	57000	65800	17600	14900
	306L3	**205**	7.3	8110	6.8	7.5	71 ... 160	25000	28500	57000	65800	18000	14900
	306L3	**222**	6.8	6520	5.1	7.5	71 ... 160	25000	28500	57000	65800	18500	14900
	306L3	**238**	6.3	8180	5.9	7.5	71 ... 160	25000	28500	57000	65800	19000	14900
	306L3	**268**	5.6	5500	3.5	7.5	71 ... 160	25000	28500	57000	65800	19700	14900
	306L3	**288**	5.2	5500	3.3	7.5	71 ... 160	25000	28500	57000	65800	20200	14900
	306L3	**325**	4.6	5540	2.9	7.5	71 ... 160	25300	28800	57600	66500	21000	14900
	306L3	**405**	3.7	5670	2.4	7.5	71 ... 160	26100	29700	59500	68700	22600	14900
	306L4	**391**	3.8	6840	3.1	6.0	71 ... 160	26000	29600	59200	68300	22400	14900
	306L4	**444**	3.4	9850	3.9	6.0	71 ... 160	26400	30100	60300	69600	23300	14900
	306L4	**509**	2.9	9450	3.3	6.0	71 ... 160	27000	30700	61500	71000	24400	14900
	306L4	**589**	2.5	9320	2.8	6.0	71 ... 160	27500	31400	62800	72500	25600	14900
	306L4	**636**	2.4	9450	2.6	6.0	71 ... 160	27800	31700	63500	73200	26300	14900
	306L4	**700**	2.1	9470	2.4	6.0	71 ... 160	28200	32200	64300	74300	27100	14900
	306L4	**809**	1.9	7690	1.7	6.0	71 ... 160	28800	32800	65700	75800	28500	14900
	306L4	**877**	1.7	7710	1.6	6.0	71 ... 160	29100	33200	66400	76700	29300	14900
	306L4	**1015**	1.5	9460	1.7	6.0	71 ... 160	29800	33900	67800	78300	30700	14900
	306L4	**1095**	1.4	7790	1.3	6.0	71 ... 160	30100	34300	68600	79200	31500	14900
	306L4	**1279**	1.2	8400	1.2	6.0	71 ... 160	30800	35100	70100	80900	33200	14900
	306L4	**1475**	1.0	10100	1.2	6.0	71 ... 160	31400	35800	71600	82600	34800	14900
	306L4	**1597**	0.94	8630	0.96	6.0	71 ... 160	31700	36200	72400	83600	35000	14900
	306L4	**1843**	0.81	10100	0.97	6.0	71 ... 160	32400	36900	73900	85300	35000	14900
	306L4	**2074**	0.72	7000	0.60	6.0	71 ... 160	33000	37600	75100	86700	35000	14900
	306L4	**2337**	0.64	7000	0.53	6.0	71 ... 160	33500	38200	76400	88200	35000	14900
	306L4	**2916**	0.51	7000	0.43	6.0	71 ... 160	34600	39400	78900	91100	35000	14900
1000	**306L1**	**3.60**	278	4250	75	21.6	160 ... 250	8250	9410	21000	24300	5360	14900
	306L1	**4.25**	235	4390	75	21.6	160 ... 250	8720	9950	22100	25500	5670	14900
	306L1	**5.33**	188	4580	75	21.6	160 ... 250	9410	10700	23700	27300	6120	14900
	306L1	**6.20**	161	4750	75	21.6	160 ... 250	9890	11300	24800	28600	6430	14900
	306L1	**7.50**	133	4620	67	21.6	160 ... 250	10500	12000	26200	30300	6850	14900
	306L2	**13.0**	77	5450	40	15.6	132 ... 200	12700	14400	30900	35600	8220	14900
	306L2	**15.3**	65	5640	40	15.6	132 ... 200	13400	15200	32500	37500	8690	14900
	306L2	**18.1**	55	6650	40	15.6	132 ... 200	14100	16100	34100	39400	9180	14900
	306L2	**22.7**	44	6840	34	15.6	132 ... 200	15200	17400	36500	42200	9910	14900

B

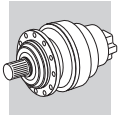

306 L

302

10840 Nm

n_1 min^{-1}		i	n_2 min^{-1}	M_{n2} Nm	P_{n1} kW	P_t kW	P (IEC)	Rn_2 [N] MC	MZ	HC/PC	HZ/PZ	FZ	$M_{2\,max}$ Nm
1000	**306L2**	**26.4**	38	6780	28.6	15.6	132 ... 200	16000	18300	38200	44100	10400	14900
	306L2	**28.4**	35	7040	27.6	15.6	132 ... 200	16400	18700	39100	45100	10700	14900
	306L2	**33.1**	30	7150	24.1	15.6	132 ... 200	17300	19700	40900	47200	11200	14900
	306L2	**38.4**	26.0	6480	18.7	15.6	132 ... 200	18200	20700	42800	49400	11800	14900
	306L2	**46.5**	21.5	6480	15.5	15.6	132 ... 200	19400	22100	45300	52300	12600	14900
	306L2	**56.3**	17.8	5330	10.5	15.6	132 ... 200	20600	23500	48000	55400	13400	14900
	306L2	**72.5**	13.8	5400	8.3	15.6	132 ... 200	22500	25600	51800	59700	14600	14900
	306L3	**53.2**	18.8	7890	17.0	9.0	71 ... 160	20300	23100	47200	54500	13200	14900
	306L3	**65.2**	15.3	8320	14.6	9.0	71 ... 160	21700	24700	50100	57900	14100	14900
	306L3	**77.0**	13.0	9090	13.5	9.0	71 ... 160	22900	26100	52700	60800	14900	14900
	306L3	**81.9**	12.2	7310	10.2	9.0	71 ... 160	23400	26700	53700	62000	15200	14900
	306L3	**88.3**	11.3	9230	12.0	9.0	71 ... 160	24000	27300	54900	63400	15600	14900
	306L3	**104**	9.6	9610	10.6	9.0	71 ... 160	25000	28500	57000	65800	16500	14900
	306L3	**112**	8.9	7590	7.8	9.0	71 ... 160	25000	28500	57000	65800	16900	14900
	306L3	**121**	8.2	8050	7.6	9.0	71 ... 160	25000	28500	57000	65800	17300	14900
	306L3	**141**	7.1	8120	6.6	9.0	71 ... 160	25000	28500	57000	65800	18200	14900
	306L3	**152**	6.6	7590	5.7	9.0	71 ... 160	25000	28500	57000	65800	18700	14900
	306L3	**190**	5.3	6530	3.9	9.0	71 ... 160	25000	28500	57000	65800	20100	14900
	306L3	**205**	4.9	8330	4.7	9.0	71 ... 160	25100	28600	57200	66000	20600	14900
	306L3	**222**	4.5	6650	3.4	9.0	71 ... 160	25400	28900	57800	66800	21200	14900
	306L3	**238**	4.2	8550	4.1	9.0	71 ... 160	25600	29200	58400	67500	21700	14900
	306L3	**268**	3.7	5670	2.4	9.0	71 ... 160	26100	29700	59400	68600	22600	14900
	306L3	**288**	3.5	5710	2.3	9.0	71 ... 160	26300	30000	60000	69300	23100	14900
	306L3	**325**	3.1	5780	2.0	9.0	71 ... 160	26800	30500	61100	70500	24100	14900
	306L3	**405**	2.5	5910	1.7	9.0	71 ... 160	27700	31500	63000	72800	25900	14900
	306L4	**391**	2.6	7340	2.2	7.2	71 ... 160	27500	31400	62700	72400	25600	14900
	306L4	**444**	2.3	9910	2.6	7.2	71 ... 160	28000	31900	63900	73700	26700	14900
	306L4	**509**	2.0	9450	2.2	7.2	71 ... 160	28600	32600	65100	75200	27900	14900
	306L4	**589**	1.7	9650	1.9	7.2	71 ... 160	29200	33300	66500	76800	29300	14900
	306L4	**636**	1.6	9450	1.8	7.2	71 ... 160	29500	33600	67200	77600	30100	14900
	306L4	**700**	1.4	9790	1.7	7.2	71 ... 160	29900	34100	68200	78700	31100	14900
	306L4	**809**	1.2	7820	1.1	7.2	71 ... 160	30500	34800	69600	80300	32600	14900
	306L4	**877**	1.1	7850	1.1	7.2	71 ... 160	30900	35200	70400	81300	33500	14900
	306L4	**1015**	0.99	9540	1.1	7.2	71 ... 160	31500	35900	71900	83000	35000	14900
	306L4	**1095**	0.91	7890	0.85	7.2	71 ... 160	31900	36300	72700	83900	35000	14900
	306L4	**1279**	0.78	8630	0.80	7.2	71 ... 160	32600	37200	74300	85800	35000	14900
	306L4	**1475**	0.68	10100	0.81	7.2	71 ... 160	33300	37900	75800	87500	35000	14900
	306L4	**1597**	0.63	8630	0.64	7.2	71 ... 160	33600	38300	76700	88500	35000	14900
	306L4	**1843**	0.54	10100	0.65	7.2	71 ... 160	34300	39100	78300	90400	35000	14900
	306L4	**2074**	0.48	7000	0.40	7.2	71 ... 160	34900	39800	79600	91900	35000	14900
	306L4	**2337**	0.43	7000	0.35	7.2	71 ... 160	35500	40500	81000	93500	35000	14900
	306L4	**2916**	0.34	7000	0.28	7.2	71 ... 160	36700	41800	83600	96500	35000	14900
500	**306L1**	**3.60**	139	5230	75	36.0	160 ... 250	10400	11900	25900	29900	6760	14900
	306L1	**4.25**	118	5410	69	36.0	160 ... 250	11000	12500	27200	31400	7140	14900
	306L1	**5.33**	94	5640	57	36.0	160 ... 250	11900	13500	29100	33600	7700	14900
	306L1	**6.20**	81	5770	50	36.0	160 ... 250	12500	14200	30500	35200	8100	14900
	306L1	**7.50**	67	5040	36	36.0	160 ... 250	13300	15100	32300	37200	8630	14900
	306L2	**13.0**	39	6470	27.8	26.0	132 ... 200	15900	18200	38000	43900	10400	14900
	306L2	**15.3**	33	6830	24.8	26.0	132 ... 200	16800	19200	40000	46100	10900	14900
	306L2	**18.1**	27.7	7760	23.9	26.0	132 ... 200	17800	20300	42000	48500	11600	14900
	306L2	**22.7**	22.1	7820	19.2	26.0	132 ... 200	19200	21900	45000	51900	12500	14900
	306L2	**26.4**	19.0	7190	15.2	26.0	132 ... 200	20200	23000	47000	54300	13100	14900
	306L2	**28.4**	17.6	7530	14.7	26.0	132 ... 200	20700	23600	48100	55600	13500	14900
	306L2	**33.1**	15.1	7640	12.9	26.0	132 ... 200	21800	24800	50400	58100	14200	14900
	306L2	**38.4**	13.0	6490	9.4	26.0	132 ... 200	22900	26100	52700	60800	14900	14900
	306L2	**46.5**	10.8	6500	7.8	26.0	132 ... 200	24400	27800	55800	64400	15900	14900
	306L2	**56.3**	8.9	5500	5.4	26.0	132 ... 200	25000	28500	57000	65800	16900	14900
	306L2	**72.5**	6.9	5500	4.2	26.0	132 ... 200	25000	28500	57000	65800	18400	14900
	306L3	**53.2**	9.4	9300	10.0	15.0	71 ... 160	25000	28500	57000	65800	16600	14900
	306L3	**65.2**	7.7	9320	8.2	15.0	71 ... 160	25000	28500	57000	65800	17800	14900

B

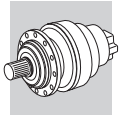

306 L — 302 — 10840 Nm

n_1 min^{-1}		i	n_2 min^{-1}	M_{n2} Nm	P_{n1} kW	P_t kW	P (IEC)	Rn_2 [N] MC	MZ	HC/PC	HZ/PZ	FZ	$M_{2\,max}$ Nm
500	**306L3**	**77.0**	6.5	9750	7.3	15.0	71 ... 160	25000	28500	57000	65800	18800	14900
	306L3	**81.9**	6.1	7650	5.4	15.0	71 ... 160	25000	28500	57000	65800	19100	14900
	306L3	**88.3**	5.7	9450	6.1	15.0	71 ... 160	25000	28500	57000	65800	19600	14900
	306L3	**104**	4.8	9850	5.4	15.0	71 ... 160	25100	28700	57300	66200	20800	14900
	306L3	**112**	4.5	7590	3.9	15.0	71 ... 160	25400	29000	58000	66900	21300	14900
	306L3	**121**	4.1	8580	4.1	15.0	71 ... 160	25700	29300	58600	67600	21800	14900
	306L3	**141**	3.5	8800	3.6	15.0	71 ... 160	26300	29900	59900	69100	23000	14900
	306L3	**152**	3.3	7590	2.9	15.0	71 ... 160	26500	30300	60500	69900	23500	14900
	306L3	**190**	2.6	7300	2.2	15.0	71 ... 160	27400	31200	62500	72100	25300	14900
	306L3	**205**	2.4	9370	2.6	15.0	71 ... 160	27700	31600	63100	72900	26000	14900
	306L3	**222**	2.3	7500	1.9	15.0	71 ... 160	28000	31900	63900	73700	26700	14900
	306L3	**238**	2.1	9390	2.3	15.0	71 ... 160	28300	32300	64500	74500	27300	14900
	306L3	**268**	1.9	6230	1.3	15.0	71 ... 160	28800	32800	65600	75800	28400	14900
	306L3	**288**	1.7	6320	1.3	15.0	71 ... 160	29100	33100	66300	76500	29100	14900
	306L3	**325**	1.5	6460	1.1	15.0	71 ... 160	29600	33700	67400	77900	30300	14900
	306L3	**405**	1.2	6730	0.95	15.0	71 ... 160	30500	34800	69600	80400	32600	14900
	306L4	**391**	1.3	8270	1.3	12.0	71 ... 160	30400	34600	69300	79900	32200	14900
	306L4	**444**	1.1	10300	1.4	12.0	71 ... 160	30900	35300	70500	81400	33600	14900
	306L4	**509**	0.98	9450	1.1	12.0	71 ... 160	31500	36000	71900	83000	35000	14900
	306L4	**589**	0.85	10100	1.0	12.0	71 ... 160	32200	36700	73400	84800	35000	14900
	306L4	**636**	0.79	9450	0.88	12.0	71 ... 160	32600	37100	74200	85700	35000	14900
	306L4	**700**	0.71	10100	0.85	12.0	71 ... 160	33000	37600	75300	86900	35000	14900
	306L4	**809**	0.62	7890	0.58	12.0	71 ... 160	33700	38400	76800	88700	35000	14900
	306L4	**877**	0.57	7890	0.53	12.0	71 ... 160	34100	38900	77700	89700	35000	14900
	306L4	**1015**	0.49	9540	0.56	12.0	71 ... 160	34800	39700	79400	91600	35000	14900
	306L4	**1095**	0.46	7890	0.43	12.0	71 ... 160	35200	40100	80200	92600	35000	14900
	306L4	**1279**	0.39	8630	0.40	12.0	71 ... 160	36000	41000	82000	94700	35000	14900
	306L4	**1475**	0.34	10100	0.40	12.0	71 ... 160	36700	41900	83700	96600	35000	14900
	306L4	**1597**	0.31	8630	0.32	12.0	71 ... 160	37100	42300	84700	97700	35000	14900
	306L4	**1843**	0.27	10100	0.32	12.0	71 ... 160	37900	43200	86400	99800	35000	14900
	306L4	**2074**	0.24	7000	0.20	12.0	71 ... 160	38600	43900	87900	101500	35000	14900
	306L4	**2337**	0.21	7000	0.18	12.0	71 ... 160	39200	44700	89400	103200	35000	14900
	306L4	**2916**	0.17	7000	0.14	12.0	71 ... 160	40500	46100	92300	106500	35000	14900

307 L — 314 — 15680 Nm

n_1 min^{-1}		i	n_2 min^{-1}	M_{n2} Nm	P_{n1} kW	P_t kW	P (IEC)	Rn_2 [N] MC	MZ	HC/PC	HZ/PZ	FZ	$M_{2\,max}$ Nm
1500	**307L1**	**3.43**	438	5110	115	22.0	180 ... 250	8510	10600	21700	28600	5930	18600
	307L1	**4.09**	367	5260	115	22.0	180 ... 250	9030	11300	22900	30100	6290	21000
	307L1	**5.25**	286	5540	115	22.0	180 ... 250	9810	12300	24700	32500	6830	21000
	307L1	**6.23**	241	5750	115	22.0	180 ... 250	10400	13000	26000	34200	7230	21000
	307L2	**12.3**	122	7510	60	18.0	132 ... 200	13000	16300	31900	42000	9080	18600
	307L2	**14.7**	102	7730	60	18.0	132 ... 200	13800	17300	33600	44300	9640	21000
	307L2	**17.4**	86	8120	60	18.0	132 ... 200	14600	18300	35400	46500	10200	21000
	307L2	**21.8**	69	8690	60	18.0	132 ... 200	15800	19700	37900	49800	11000	21000
	307L2	**25.4**	59	9090	60	18.0	132 ... 200	16600	20700	39600	52100	11600	21000
	307L2	**28.0**	54	9150	55	18.0	132 ... 200	17100	21400	40800	53700	11900	21000
	307L2	**30.7**	49	9590	52	18.0	132 ... 200	17700	22100	41900	55200	12300	21000
	307L2	**32.6**	46	9410	48	18.0	132 ... 200	18000	22500	42700	56200	12600	21000
	307L2	**38.6**	39	8310	36	18.0	132 ... 200	19100	23900	44900	59100	13300	21000
	307L2	**46.7**	32	8360	29.9	18.0	132 ... 200	20300	25400	47600	62600	14200	21000
	307L3	**51.3**	29.3	10700	30	11.0	71 ... 160	21000	26200	48900	64300	14600	21000
	307L3	**60.5**	24.8	11100	30	11.0	71 ... 160	22200	27700	51400	67600	15400	21000
	307L3	**74.1**	20.2	11600	27.0	11.0	71 ... 160	23700	29600	54600	71900	16500	21000
	307L3	**80.6**	18.6	10200	21.8	11.0	71 ... 160	24400	30500	56000	73700	17000	21000
	307L3	**93.0**	16.1	12200	22.6	11.0	71 ... 160	25600	32000	58500	76900	17800	21000
	307L3	**100**	15.0	12400	21.3	11.0	71 ... 160	26200	32800	59800	78700	18300	21000
	307L3	**113**	13.2	10500	16.0	11.0	71 ... 160	27300	34100	62000	81600	19000	21000

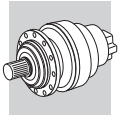

307 L	314	15680 Nm

n_1 min^{-1}		i	n_2 min^{-1}	M_{n2} Nm	P_{n1} kW	P_t kW	P (IEC)	Rn_2 [N] MC	MZ	HC/PC	HZ/PZ	FZ	$M_{2\,max}$ Nm
1500	**307L3**	**126**	11.9	13000	17.8	11.0	71 ... 160	28300	35400	64000	84200	19700	21000
	307L3	**139**	10.8	10700	13.3	11.0	71 ... 160	29200	36500	65900	86800	20400	21000
	307L3	**146**	10.3	13400	15.8	11.0	71 ... 160	29800	37200	67000	88100	20700	21000
	307L3	**162**	9.3	10800	11.6	11.0	71 ... 160	30000	37500	67500	88800	21400	21000
	307L3	**177**	8.5	12300	12.0	11.0	71 ... 160	30000	37500	67500	88800	22100	21000
	307L3	**202**	7.4	11000	9.4	11.0	71 ... 160	30000	37500	67500	88800	23100	21000
	307L3	**221**	6.8	12700	9.9	11.0	71 ... 160	30000	37500	67500	88800	23800	21000
	307L3	**239**	6.3	8700	6.3	11.0	71 ... 160	30000	37500	67500	88800	24400	21000
	307L3	**284**	5.3	11300	6.8	11.0	71 ... 160	30000	37500	67500	88800	25800	21000
	307L3	**336**	4.5	8840	4.5	11.0	71 ... 160	30500	38100	68600	90300	27300	21000
	307L4	**349**	4.3	14900	7.6	7.5	71 ... 160	30700	38300	69000	90700	27700	21000
	307L4	**406**	3.7	11900	5.2	7.5	71 ... 160	31300	39100	70500	92700	29100	21000
	307L4	**465**	3.2	12200	4.6	7.5	71 ... 160	31900	39900	71900	94500	30500	21000
	307L4	**509**	2.9	14000	4.9	7.5	71 ... 160	32400	40400	72800	95800	31400	21000
	307L4	**579**	2.6	14900	4.6	7.5	71 ... 160	33000	41200	74100	97500	32800	21000
	307L4	**654**	2.3	12900	3.5	7.5	71 ... 160	33500	41900	75400	99200	34100	21000
	307L4	**722**	2.1	15000	3.7	7.5	71 ... 160	34000	42500	76500	100700	35300	21000
	307L4	**801**	1.9	13300	3.0	7.5	71 ... 160	34500	43100	77700	102200	36500	21000
	307L4	**906**	1.7	15200	3.0	7.5	71 ... 160	35100	43900	79000	104000	38000	21000
	307L4	**999**	1.5	13800	2.5	7.5	71 ... 160	35600	44500	80200	105500	39300	21000
	307L4	**1157**	1.3	14200	2.2	7.5	71 ... 160	36400	45500	81900	107700	41300	21000
	307L4	**1274**	1.2	12300	1.7	7.5	71 ... 160	36900	46100	83000	109200	42600	21000
	307L4	**1408**	1.1	15600	2.0	7.5	71 ... 160	37400	46800	84200	110800	44100	21000
	307L4	**1591**	0.94	15000	1.7	7.5	71 ... 160	38100	47600	85700	112700	45000	21000
	307L4	**1767**	0.85	15700	1.6	7.5	71 ... 160	38600	48300	87000	114400	45000	21000
	307L4	**2041**	0.73	14300	1.2	7.5	71 ... 160	39500	49300	88800	116800	45000	21000
	307L4	**2423**	0.62	11000	0.81	7.5	71 ... 160	40400	50500	91000	119700	45000	21000
1000	**307L1**	**3.43**	292	5770	115	26.4	180 ... 250	9750	12200	24500	32300	6790	18600
	307L1	**4.09**	244	5940	115	26.4	180 ... 250	10300	12900	25900	34000	7200	21000
	307L1	**5.25**	190	6260	115	26.4	180 ... 250	11200	14000	27900	36700	7820	21000
	307L1	**6.23**	160	6500	113	26.4	180 ... 250	11900	14900	29400	38600	8280	21000
	307L2	**12.3**	81	8060	60	21.6	132 ... 200	14900	18700	36000	47400	10400	18600
	307L2	**14.7**	68	8720	60	21.6	132 ... 200	15800	19800	38000	50000	11000	21000
	307L2	**17.4**	58	9170	59	21.6	132 ... 200	16700	20900	39900	52500	11700	21000
	307L2	**21.8**	46	9740	50	21.6	132 ... 200	18100	22600	42800	56200	12600	21000
	307L2	**25.4**	39	10100	44	21.6	132 ... 200	19000	23700	44700	58800	13200	21000
	307L2	**28.0**	36	9630	38	21.6	132 ... 200	19600	24500	46100	60600	13700	21000
	307L2	**30.7**	33	10200	37	21.6	132 ... 200	20200	25300	47400	62300	14100	21000
	307L2	**32.6**	31	9760	33	21.6	132 ... 200	20600	25800	48200	63400	14400	21000
	307L2	**38.6**	25.9	8430	24.3	21.6	132 ... 200	21800	27300	50700	66800	15200	21000
	307L2	**46.7**	21.4	8480	20.2	21.6	132 ... 200	23300	29100	53700	70700	16200	21000
	307L3	**51.3**	19.5	11700	26.2	13.2	71 ... 160	24000	30000	55200	72700	16700	21000
	307L3	**60.5**	16.5	12100	23.0	13.2	71 ... 160	25400	31700	58100	76400	17700	21000
	307L3	**74.1**	13.5	12700	19.6	13.2	71 ... 160	27100	33900	61700	81200	18900	21000
	307L3	**80.6**	12.4	10600	15.1	13.2	71 ... 160	27900	34900	63300	83200	19400	21000
	307L3	**93.0**	10.8	13300	16.4	13.2	71 ... 160	29300	36600	66000	86900	20400	21000
	307L3	**100**	10.0	13500	15.5	13.2	71 ... 160	30000	37500	67500	88800	20900	21000
	307L3	**113**	8.8	10900	11.0	13.2	71 ... 160	30000	37500	67500	88800	21800	21000
	307L3	**126**	7.9	14000	12.7	13.2	71 ... 160	30000	37500	67500	88800	22600	21000
	307L3	**139**	7.2	11000	9.1	13.2	71 ... 160	30000	37500	67500	88800	23300	21000
	307L3	**146**	6.8	13800	10.8	13.2	71 ... 160	30000	37500	67500	88800	23700	21000
	307L3	**162**	6.2	11100	7.9	13.2	71 ... 160	30000	37500	67500	88800	24500	21000
	307L3	**177**	5.6	12300	8.0	13.2	71 ... 160	30000	37500	67500	88800	25300	21000
	307L3	**202**	5.0	11300	6.4	13.2	71 ... 160	30000	37500	67600	88900	26400	21000
	307L3	**221**	4.5	13000	6.8	13.2	71 ... 160	30400	38000	68500	90100	27200	21000
	307L3	**239**	4.2	8920	4.3	13.2	71 ... 160	30800	38500	69300	91100	27900	21000
	307L3	**284**	3.5	12000	4.8	13.2	71 ... 160	31500	39400	70900	93300	29600	21000
	307L3	**336**	3.0	9370	3.2	13.2	71 ... 160	32300	40400	72700	95700	31300	21000
	307L4	**349**	2.9	14900	5.0	9.0	71 ... 160	32500	40600	73100	96200	31700	21000
	307L4	**406**	2.5	12700	3.7	9.0	71 ... 160	33200	41500	74700	98200	33300	21000
	307L4	**465**	2.2	13000	3.3	9.0	71 ... 160	33800	42300	76100	100200	34900	21000

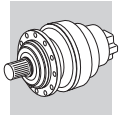

307 L	314	15680 Nm

n_1 min^{-1}		i	n_2 min^{-1}	M_{n2} Nm	P_{n1} kW	P_t kW	P (IEC)	Rn_2 [N] MC	MZ	HC/PC	HZ/PZ	FZ	$M_{2\,max}$ Nm
1000	**307L4**	**509**	2.0	14300	3.3	9.0	71 ... 160	34300	42900	77100	101500	35900	21000
	307L4	**579**	1.7	15200	3.1	9.0	71 ... 160	34900	43600	78600	103400	37500	21000
	307L4	**654**	1.5	13800	2.5	9.0	71 ... 160	35500	44400	79900	105200	39100	21000
	307L4	**722**	1.4	15400	2.5	9.0	71 ... 160	36000	45000	81100	106700	40400	21000
	307L4	**801**	1.2	14300	2.1	9.0	71 ... 160	36600	45700	82300	108300	41800	21000
	307L4	**906**	1.1	15600	2.0	9.0	71 ... 160	37200	46500	83800	110200	43500	21000
	307L4	**999**	1.0	14800	1.8	9.0	71 ... 160	37800	47200	84900	111700	45000	21000
	307L4	**1157**	0.86	14800	1.5	9.0	71 ... 160	38500	48200	86700	114100	45000	21000
	307L4	**1274**	0.78	12300	1.1	9.0	71 ... 160	39100	48900	87900	115700	45000	21000
	307L4	**1408**	0.71	15700	1.3	9.0	71 ... 160	39600	49600	89200	117400	45000	21000
	307L4	**1591**	0.63	15000	1.1	9.0	71 ... 160	40300	50400	90800	119400	45000	21000
	307L4	**1767**	0.57	15700	1.0	9.0	71 ... 160	41000	51200	92100	121200	45000	21000
	307L4	**2041**	0.49	14300	0.83	9.0	71 ... 160	41800	52300	94100	123700	45000	21000
	307L4	**2423**	0.41	11000	0.54	9.0	71 ... 160	42800	53600	96400	126800	45000	21000
500	**307L1**	**3.43**	146	7110	112	44.0	180 ... 250	12300	15300	30200	39700	8550	18600
	307L1	**4.09**	122	7320	97	44.0	180 ... 250	13000	16300	31900	41900	9070	21000
	307L1	**5.25**	95	7700	79	44.0	180 ... 250	14200	17700	34300	45200	9850	21000
	307L1	**6.23**	80	7720	67	44.0	180 ... 250	15000	18700	36100	47500	10400	21000
	307L2	**12.3**	41	8390	38	36.0	132 ... 200	18800	23500	44400	58400	13100	18600
	307L2	**14.7**	34	10400	39	36.0	132 ... 200	20000	25000	46800	61500	13900	21000
	307L2	**17.4**	28.8	10800	34	36.0	132 ... 200	21100	26400	49200	64700	14700	21000
	307L2	**21.8**	22.9	11300	28.8	36.0	132 ... 200	22800	28400	52600	69200	15800	21000
	307L2	**25.4**	19.7	11700	25.6	36.0	132 ... 200	23900	29900	55100	72400	16700	21000
	307L2	**28.0**	17.9	10200	20.4	36.0	132 ... 200	24700	30900	56700	74600	17200	21000
	307L2	**30.7**	16.3	11400	20.7	36.0	132 ... 200	25500	31900	58300	76700	17700	21000
	307L2	**32.6**	15.4	10400	17.7	36.0	132 ... 200	26000	32500	59300	78100	18100	21000
	307L2	**38.6**	12.9	8620	12.4	36.0	132 ... 200	27500	34400	62500	82200	19200	21000
	307L2	**46.7**	10.7	8680	10.3	36.0	132 ... 200	29300	36700	66100	87000	20400	21000
	307L3	**51.3**	9.8	13600	15.2	22.0	71 ... 160	30000	37500	67500	88800	21100	21000
	307L3	**60.5**	8.3	13900	13.2	22.0	71 ... 160	30000	37500	67500	88800	22300	21000
	307L3	**74.1**	6.7	14300	11.0	22.0	71 ... 160	30000	37500	67500	88800	23800	21000
	307L3	**80.6**	6.2	11100	7.9	22.0	71 ... 160	30000	37500	67500	88800	24500	21000
	307L3	**93.0**	5.4	14700	9.1	22.0	71 ... 160	30000	37500	67500	88800	25700	21000
	307L3	**100**	5.0	14900	8.5	22.0	71 ... 160	30000	37500	67500	88800	26300	21000
	307L3	**113**	4.4	11500	5.8	22.0	71 ... 160	30500	38200	68700	90400	27400	21000
	307L3	**126**	4.0	14900	6.8	22.0	71 ... 160	31000	38800	69800	91800	28400	21000
	307L3	**139**	3.6	11900	4.9	22.0	71 ... 160	31400	39300	70700	93100	29400	21000
	307L3	**146**	3.4	14000	5.5	22.0	71 ... 160	31700	39600	71300	93800	29900	21000
	307L3	**162**	3.1	12300	4.4	22.0	71 ... 160	32100	40200	72300	95100	30900	21000
	307L3	**177**	2.8	12300	4.0	22.0	71 ... 160	32500	40700	73200	96300	31800	21000
	307L3	**202**	2.5	12700	3.6	22.0	71 ... 160	33200	41500	74600	98200	33200	21000
	307L3	**221**	2.3	13900	3.6	22.0	71 ... 160	33600	42000	75600	99400	34300	21000
	307L3	**239**	2.1	9860	2.4	22.0	71 ... 160	34000	42500	76500	100600	35200	21000
	307L3	**284**	1.8	13300	2.7	22.0	71 ... 160	34800	43500	78300	103100	37200	21000
	307L3	**336**	1.5	10400	1.8	22.0	71 ... 160	35700	44600	80300	105600	39400	21000
	307L4	**349**	1.4	15400	2.6	15.0	71 ... 160	35900	44800	80700	106200	39900	21000
	307L4	**406**	1.2	14300	2.1	15.0	71 ... 160	36600	45800	82400	108500	42000	21000
	307L4	**465**	1.1	14700	1.9	15.0	71 ... 160	37400	46700	84100	110600	43900	21000
	307L4	**509**	0.98	15000	1.7	15.0	71 ... 160	37900	47300	85200	112000	45000	21000
	307L4	**579**	0.86	15700	1.6	15.0	71 ... 160	38600	48200	86700	114100	45000	21000
	307L4	**654**	0.77	14800	1.3	15.0	71 ... 160	39200	49000	88300	116100	45000	21000
	307L4	**722**	0.69	15700	1.3	15.0	71 ... 160	39800	49700	89500	117800	45000	21000
	307L4	**801**	0.62	14800	1.1	15.0	71 ... 160	40400	50500	90900	119500	45000	21000
	307L4	**906**	0.55	15700	1.0	15.0	71 ... 160	41100	51400	92500	121700	45000	21000
	307L4	**999**	0.50	14800	0.88	15.0	71 ... 160	41700	52100	93800	123400	45000	21000
	307L4	**1157**	0.43	14800	0.76	15.0	71 ... 160	42600	53200	95800	126000	45000	21000
	307L4	**1274**	0.39	12300	0.57	15.0	71 ... 160	43200	53900	97100	127700	45000	21000
	307L4	**1408**	0.36	15700	0.66	15.0	71 ... 160	43800	54700	98500	129600	45000	21000
	307L4	**1591**	0.31	15000	0.56	15.0	71 ... 160	44500	55700	100200	131800	45000	21000
	307L4	**1767**	0.28	15700	0.52	15.0	71 ... 160	45200	56500	101700	133800	45000	21000
	307L4	**2041**	0.24	14300	0.42	15.0	71 ... 160	46200	57700	103900	136600	45000	21000
	307L4	**2423**	0.21	11000	0.27	15.0	71 ... 160	47300	59100	106400	140000	45000	21000

B

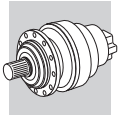

309 L	326	23240 Nm

n_1 min^{-1}		i	n_2 min^{-1}	M_{n2} Nm	P_{n1} kW	P_t kW	P (IEC)	Rn_2 [N] MC	MZ	HC/PC	HZ/PZ	FZ	$M_{2\,max}$ Nm
1500	**309L1**	**3.43**	438	7010	150	25.0	180 ... 250	—	—	22200	28600	4740	27900
	309L1	**4.09**	367	7220	150	25.0	180 ... 250	—	—	23400	30100	5030	29000
	309L1	**5.25**	286	7600	150	25.0	180 ... 250	—	—	25200	32500	5470	29000
	309L1	**6.23**	241	7900	150	25.0	180 ... 250	—	—	26600	34200	5790	29000
	309L2	**12.3**	122	7890	60	18.0	132 ... 200	—	—	32600	42000	7270	27900
	309L2	**14.7**	102	9410	60	18.0	132 ... 200	—	—	34400	44300	7710	29000
	309L2	**17.4**	86	9730	60	18.0	132 ... 200	—	—	36100	46500	8150	29000
	309L2	**21.8**	69	10100	60	18.0	132 ... 200	—	—	38700	49800	8790	29000
	309L2	**25.4**	59	10500	60	18.0	132 ... 200	—	—	40500	52100	9240	29000
	309L2	**28.0**	54	12500	60	18.0	132 ... 200	—	—	41700	53700	9550	29000
	309L2	**32.6**	46	13000	60	18.0	132 ... 200	—	—	43600	56200	10000	29000
	309L2	**38.6**	39	12500	54	18.0	132 ... 200	—	—	45900	59100	10600	29000
	309L2	**46.7**	32	12500	45	18.0	132 ... 200	—	—	48600	62600	11300	29000
	309L3	**51.3**	29.3	13400	30	11.0	71 ... 160	—	—	50000	64300	11700	29000
	309L3	**60.5**	24.8	14100	30	11.0	71 ... 160	—	—	52500	67600	12300	29000
	309L3	**74.1**	20.2	15000	30	11.0	71 ... 160	—	—	55800	71900	13200	29000
	309L3	**80.6**	18.6	14800	30	11.0	71 ... 160	—	—	57300	73700	13600	29000
	309L3	**93.0**	16.1	15100	27.9	11.0	71 ... 160	—	—	59800	76900	14200	29000
	309L3	**100**	15.0	16500	28.3	11.0	71 ... 160	—	—	61200	78700	14600	29000
	309L3	**113**	13.2	15500	23.6	11.0	71 ... 160	—	—	63400	81600	15200	29000
	309L3	**126**	11.9	16400	22.4	11.0	71 ... 160	—	—	65500	84200	15800	29000
	309L3	**139**	10.8	16000	19.9	11.0	71 ... 160	—	—	67400	86800	16300	29000
	309L3	**162**	9.3	16300	17.3	11.0	71 ... 160	—	—	69000	88800	17100	29000
	309L3	**183**	8.2	14300	13.5	11.0	71 ... 160	—	—	69000	88800	17800	29000
	309L3	**202**	7.4	16500	14.1	11.0	71 ... 160	—	—	69000	88800	18400	29000
	309L3	**223**	6.7	13000	10.0	11.0	71 ... 160	—	—	69000	88800	19100	29000
	309L3	**239**	6.3	13000	9.4	11.0	71 ... 160	—	—	69000	88800	19500	29000
	309L3	**284**	5.3	15700	9.6	11.0	71 ... 160	—	—	69000	88800	20700	29000
	309L3	**336**	4.5	13200	6.8	11.0	71 ... 160	—	—	70100	90300	21900	29000
	309L4	**349**	4.3	21300	10.8	7.5	71 ... 160	—	—	70500	90700	22100	29000
	309L4	**406**	3.7	17800	7.8	7.5	71 ... 160	—	—	72000	92700	23300	29000
	309L4	**465**	3.2	18300	7.0	7.5	71 ... 160	—	—	73500	94500	24400	29000
	309L4	**509**	2.9	14300	5.0	7.5	71 ... 160	—	—	74400	95800	25100	29000
	309L4	**579**	2.6	21300	6.5	7.5	71 ... 160	—	—	75800	97500	26200	29000
	309L4	**654**	2.3	18100	4.9	7.5	71 ... 160	—	—	77100	99200	27300	29000
	309L4	**722**	2.1	21300	5.2	7.5	71 ... 160	—	—	78200	100700	28200	29000
	309L4	**801**	1.9	18200	4.0	7.5	71 ... 160	—	—	79400	102200	29200	29000
	309L4	**906**	1.7	17900	3.5	7.5	71 ... 160	—	—	80800	104000	30400	29000
	309L4	**999**	1.5	18200	3.2	7.5	71 ... 160	—	—	81900	105500	31400	29000
	309L4	**1149**	1.3	16200	2.5	7.5	71 ... 160	—	—	83600	107600	32900	29000
	309L4	**1286**	1.2	16500	2.3	7.5	71 ... 160	—	—	84900	109300	34200	29000
	309L4	**1380**	1.1	16700	2.2	7.5	71 ... 160	—	—	85800	110400	35000	29000
	309L4	**1605**	0.93	17000	1.9	7.5	71 ... 160	—	—	87700	112800	36000	29000
	309L4	**1723**	0.87	17000	1.8	7.5	71 ... 160	—	—	88600	114000	36000	29000
	309L4	**2003**	0.75	17000	1.5	7.5	71 ... 160	—	—	90500	116500	36000	29000
	309L4	**2423**	0.62	17000	1.2	7.5	71 ... 160	—	—	93000	119700	36000	29000
1000	**309L1**	**3.43**	292	7920	150	30	180 ... 250	—	—	25100	32300	5430	27900
	309L1	**4.09**	244	8150	150	30	180 ... 250	—	—	26400	34000	5760	29000
	309L1	**5.25**	190	8580	150	30	180 ... 250	—	—	28500	36700	6260	29000
	309L1	**6.23**	160	8920	150	30	180 ... 250	—	—	30000	38600	6620	29000
	309L2	**12.3**	81	8900	60	21.6	132 ... 200	—	—	36800	47400	8320	27900
	309L2	**14.7**	68	10600	60	21.6	132 ... 200	—	—	38800	50000	8820	29000
	309L2	**17.4**	58	11000	60	21.6	132 ... 200	—	—	40800	52500	9330	29000
	309L2	**21.8**	46	11400	58	21.6	132 ... 200	—	—	43700	56200	10100	29000
	309L2	**25.4**	39	11500	50	21.6	132 ... 200	—	—	45700	58800	10600	29000
	309L2	**28.0**	36	13500	53	21.6	132 ... 200	—	—	47100	60600	10900	29000
	309L2	**32.6**	31	13800	47	21.6	132 ... 200	—	—	49300	63400	11500	29000
	309L2	**38.6**	25.9	12600	36	21.6	132 ... 200	—	—	51900	66800	12200	29000
	309L2	**46.7**	21.4	12700	30	21.6	132 ... 200	—	—	54900	70700	13000	29000

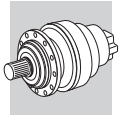

309 L

326

23240 Nm

n_1 min^{-1}		i	n_2 min^{-1}	M_{n2} Nm	P_{n1} kW	P_t kW	P (IEC)	Rn_2 [N] MC	MZ	HC/PC	HZ/PZ	FZ	$M_{2\,max}$ Nm
1000	**309L3**	**51.3**	19.5	14900	30	13.2	71 ... 160	—	—	56500	72700	13400	29000
	309L3	**60.5**	16.5	16000	30	13.2	71 ... 160	—	—	59300	76400	14100	29000
	309L3	**74.1**	13.5	17000	26.3	13.2	71 ... 160	—	—	63100	81200	15100	29000
	309L3	**80.6**	12.4	15700	22.3	13.2	71 ... 160	—	—	64700	83200	15500	29000
	309L3	**93.0**	10.8	16800	20.7	13.2	71 ... 160	—	—	67500	86900	16300	29000
	309L3	**100**	10.0	18600	21.3	13.2	71 ... 160	—	—	69000	88800	16700	29000
	309L3	**113**	8.8	16300	16.5	13.2	71 ... 160	—	—	69000	88800	17400	29000
	309L3	**126**	7.9	17300	15.7	13.2	71 ... 160	—	—	69000	88800	18000	29000
	309L3	**139**	7.2	16500	13.7	13.2	71 ... 160	—	—	69000	88800	18600	29000
	309L3	**162**	6.2	16700	11.9	13.2	71 ... 160	—	—	69000	88800	19600	29000
	309L3	**183**	5.5	14300	9.0	13.2	71 ... 160	—	—	69000	88800	20400	29000
	309L3	**202**	5.0	17000	9.7	13.2	71 ... 160	—	—	69100	88900	21100	29000
	309L3	**223**	4.5	13200	6.8	13.2	71 ... 160	—	—	70100	90200	21800	29000
	309L3	**239**	4.2	13300	6.4	13.2	71 ... 160	—	—	70800	91100	22300	29000
	309L3	**284**	3.5	15800	6.4	13.2	71 ... 160	—	—	72500	93300	23600	29000
	309L3	**336**	3.0	14000	4.8	13.2	71 ... 160	—	—	74300	95700	25000	29000
	309L4	**349**	2.9	21300	7.2	9.0	71 ... 160	—	—	74700	96200	25300	29000
	309L4	**406**	2.5	19100	5.6	9.0	71 ... 160	—	—	76300	98200	26600	29000
	309L4	**465**	2.2	19500	5.0	9.0	71 ... 160	—	—	77800	100200	27900	29000
	309L4	**509**	2.0	14400	3.3	9.0	71 ... 160	—	—	78900	101500	28700	29000
	309L4	**579**	1.7	21400	4.4	9.0	71 ... 160	—	—	80300	103400	30000	29000
	309L4	**654**	1.5	18200	3.3	9.0	71 ... 160	—	—	81700	105200	31200	29000
	309L4	**722**	1.4	21500	3.5	9.0	71 ... 160	—	—	82900	106700	32300	29000
	309L4	**801**	1.2	18300	2.7	9.0	71 ... 160	—	—	84100	108300	33400	29000
	309L4	**906**	1.1	18400	2.4	9.0	71 ... 160	—	—	85600	110200	34800	29000
	309L4	**999**	1.0	18300	2.2	9.0	71 ... 160	—	—	86800	111700	36000	29000
	309L4	**1149**	0.87	17000	1.7	9.0	71 ... 160	—	—	88600	114000	36000	29000
	309L4	**1286**	0.78	17000	1.6	9.0	71 ... 160	—	—	90000	115800	36000	29000
	309L4	**1380**	0.72	17000	1.5	9.0	71 ... 160	—	—	90900	117000	36000	29000
	309L4	**1605**	0.62	17000	1.3	9.0	71 ... 160	—	—	92900	119600	36000	29000
	309L4	**1723**	0.58	17000	1.2	9.0	71 ... 160	—	—	93900	120800	36000	29000
	309L4	**2003**	0.50	17000	1.0	9.0	71 ... 160	—	—	95900	123400	36000	29000
	309L4	**2423**	0.41	17000	0.83	9.0	71 ... 160	—	—	98500	126800	36000	29000
500	**309L1**	**3.43**	146	9750	150	50	180 ... 250	—	—	30900	39700	6840	27900
	309L1	**4.09**	122	10000	132	50	180 ... 250	—	—	32600	41900	7250	29000
	309L1	**5.25**	95	10600	109	50	180 ... 250	—	—	35100	45200	7880	29000
	309L1	**6.23**	80	10900	94	50	180 ... 250	—	—	36900	47500	8350	29000
	309L2	**12.3**	41	10600	48	36	132 ... 200	—	—	45400	58400	10500	27900
	309L2	**14.7**	34	12900	49	36	132 ... 200	—	—	47800	61500	11100	29000
	309L2	**17.4**	28.8	13500	43	36	132 ... 200	—	—	50300	64700	11800	29000
	309L2	**21.8**	22.9	13700	35	36	132 ... 200	—	—	53800	69200	12700	29000
	309L2	**25.4**	19.7	12800	28.2	36	132 ... 200	—	—	56300	72400	13300	29000
	309L2	**28.0**	17.9	14900	29.6	36	132 ... 200	—	—	58000	74600	13800	29000
	309L2	**32.6**	15.4	15200	26.0	36	132 ... 200	—	—	60700	78100	14500	29000
	309L2	**38.6**	12.9	12900	18.6	36	132 ... 200	—	—	63900	82200	15300	29000
	309L2	**46.7**	10.7	13000	15.4	36	132 ... 200	—	—	67600	87000	16300	29000
	309L3	**51.3**	9.8	17700	19.8	22.0	71 ... 160	—	—	69000	88800	16800	29000
	309L3	**60.5**	8.3	19300	18.3	22.0	71 ... 160	—	—	69000	88800	17800	29000
	309L3	**74.1**	6.7	20100	15.5	22.0	71 ... 160	—	—	69000	88800	19100	29000
	309L3	**80.6**	6.2	16700	11.9	22.0	71 ... 160	—	—	69000	88800	19600	29000
	309L3	**93.0**	5.4	17500	10.8	22.0	71 ... 160	—	—	69000	88800	20600	29000
	309L3	**100**	5.0	21300	12.2	22.0	71 ... 160	—	—	69000	88800	21100	29000
	309L3	**113**	4.4	17100	8.7	22.0	71 ... 160	—	—	70200	90400	21900	29000
	309L3	**126**	4.0	17500	8.0	22.0	71 ... 160	—	—	71300	91800	22700	29000
	309L3	**139**	3.6	17500	7.2	22.0	71 ... 160	—	—	72300	93100	23500	29000
	309L3	**162**	3.1	18400	6.5	22.0	71 ... 160	—	—	73900	95100	24700	29000
	309L3	**183**	2.7	14300	4.5	22.0	71 ... 160	—	—	75200	96800	25700	29000
	309L3	**202**	2.5	19100	5.4	22.0	71 ... 160	—	—	76300	98200	26600	29000
	309L3	**223**	2.2	14700	3.8	22.0	71 ... 160	—	—	77400	99600	27500	29000
	309L3	**239**	2.1	14900	3.6	22.0	71 ... 160	—	—	78200	100600	28200	29000
	309L3	**284**	1.8	15800	3.2	22.0	71 ... 160	—	—	80100	103100	29800	29000

B

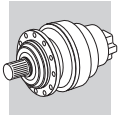

309 L — 326 — 23240 Nm

n_1 min^{-1}		i	n_2 min^{-1}	M_{n2} Nm	P_{n1} kW	P_t kW	P (IEC)	Rn_2 [N] MC	MZ	HC/PC	HZ/PZ	FZ	$M_{2\,max}$ Nm
500	**309L3**	**336**	1.5	15800	2.7	22.0	71 ... 160	—	—	82100	105600	31500	29000
	309L4	**349**	1.4	21500	3.6	15.0	71 ... 160	—	—	82500	106200	31900	29000
	309L4	**406**	1.2	21300	3.1	15.0	71 ... 160	—	—	84300	108500	33600	29000
	309L4	**465**	1.1	21700	2.8	15.0	71 ... 160	—	—	85900	110600	35100	29000
	309L4	**509**	0.98	14700	1.7	15.0	71 ... 160	—	—	87100	112000	36000	29000
	309L4	**579**	0.86	21600	2.2	15.0	71 ... 160	—	—	88700	114100	36000	29000
	309L4	**654**	0.77	18300	1.7	15.0	71 ... 160	—	—	90200	116100	36000	29000
	309L4	**722**	0.69	21600	1.8	15.0	71 ... 160	—	—	91500	117800	36000	29000
	309L4	**801**	0.62	18300	1.4	15.0	71 ... 160	—	—	92900	119500	36000	29000
	309L4	**906**	0.55	18500	1.2	15.0	71 ... 160	—	—	94500	121700	36000	29000
	309L4	**999**	0.50	18300	1.1	15.0	71 ... 160	—	—	95900	123400	36000	29000
	309L4	**1149**	0.44	17000	0.87	15.0	71 ... 160	—	—	97800	125900	36000	29000
	309L4	**1286**	0.39	17000	0.78	15.0	71 ... 160	—	—	99400	127900	36000	29000
	309L4	**1380**	0.36	17000	0.73	15.0	71 ... 160	—	—	100400	129200	36000	29000
	309L4	**1605**	0.31	17000	0.63	15.0	71 ... 160	—	—	102600	132000	36000	29000
	309L4	**1723**	0.29	17000	0.58	15.0	71 ... 160	—	—	103600	133400	36000	29000
	309L4	**2003**	0.25	17000	0.50	15.0	71 ... 160	—	—	105900	136300	36000	29000
	309L4	**2423**	0.21	17000	0.42	15.0	71 ... 160	—	—	108800	140000	36000	29000

310M L — 338 — 33640 Nm

n_1 min^{-1}		i	n_2 min^{-1}	M_{n2} Nm	P_{n1} kW	P_t kW	P (IEC)	Rn_2 [N] MC	MZ	HC/PC	HZ/PZ	FZ	$M_{2\,max}$ Nm
1500	**310ML1**	**4.09**	367	11700	175	35	200 ... 250	—	—	26500	33600	9080	47600
	310ML1	**5.25**	286	12300	175	35	200 ... 250	—	—	28500	36200	9870	47600
	310ML1	**6.23**	241	12800	175	35	200 ... 250	—	—	30000	38100	10400	47600
	310ML2	**14.7**	102	14900	75	22.0	160 ... 250	—	—	38900	49300	13900	47600
	310ML2	**17.4**	86	15400	75	22.0	160 ... 250	—	—	40900	51800	14700	47600
	310ML2	**21.8**	69	16100	75	22.0	160 ... 250	—	—	43700	55500	15900	47600
	310ML2	**25.4**	59	16700	75	22.0	160 ... 250	—	—	45800	58000	16700	47600
	310ML2	**28**	54	20300	75	22.0	160 ... 250	—	—	47100	59800	17200	47600
	310ML2	**30.7**	49	17100	75	22.0	160 ... 250	—	—	48500	61400	17800	47600
	310ML2	**32.6**	46	20800	75	22.0	160 ... 250	—	—	49300	62500	18100	47600
	310ML2	**38.6**	39	17800	75	22.0	160 ... 250	—	—	51900	65800	19200	47600
	310ML2	**46.7**	32	17800	64	22.0	160 ... 250	—	—	55000	69700	20500	47600
	310ML3	**53**	28.3	19100	40	18.0	132 ... 200	—	—	57100	72400	21300	47600
	310ML3	**62.6**	24.0	19800	40	18.0	132 ... 200	—	—	60000	76100	22500	47600
	310ML3	**73.9**	20.3	22300	40	18.0	132 ... 200	—	—	63100	80000	23800	47600
	310ML3	**80.3**	18.7	20600	40	18.0	132 ... 200	—	—	64700	82000	24500	47600
	310ML3	**92.7**	16.2	23200	40	18.0	132 ... 200	—	—	67500	85600	25700	47600
	310ML3	**101**	14.9	20800	36	18.0	132 ... 200	—	—	69200	87800	26400	47600
	310ML3	**108**	13.9	24300	39	18.0	132 ... 200	—	—	70600	89600	27000	47600
	310ML3	**119**	12.6	21500	31	18.0	132 ... 200	—	—	72800	92300	27900	47600
	310ML3	**135**	11.1	25800	33	18.0	132 ... 200	—	—	75600	95900	29100	47600
	310ML3	**149**	10.0	21700	25	18.0	132 ... 200	—	—	77900	98800	30100	47600
	310ML3	**164**	9.2	26600	27.9	18.0	132 ... 200	—	—	78000	98900	31100	47600
	310ML3	**177**	8.5	17900	17.3	18.0	132 ... 200	—	—	78000	98900	31900	47600
	310ML3	**202**	7.4	22100	18.8	18.0	132 ... 200	—	—	78000	98900	33300	47600
	310ML3	**230**	6.5	19300	14.5	18.0	132 ... 200	—	—	78000	98900	34800	47600
	310ML3	**249**	6.0	17900	12.4	18.0	132 ... 200	—	—	78000	98900	35700	47600
	310ML3	**295**	5.1	22700	13.2	18.0	132 ... 200	—	—	78000	98900	37800	47600
	310ML3	**350**	4.3	18500	9.1	18.0	132 ... 200	—	—	79800	101100	40000	47600
	310ML4	**392**	3.8	18900	8.5	11.0	71 ... 160	—	—	81000	102700	41500	47600
	310ML4	**453**	3.3	29000	11.3	11.0	71 ... 160	—	—	82700	104900	43600	47600
	310ML4	**507**	3.0	24900	8.7	11.0	71 ... 160	—	—	84100	106600	45300	47600
	310ML4	**590**	2.5	25600	7.7	11.0	71 ... 160	—	—	85900	108900	47600	47600
	310ML4	**637**	2.4	25900	7.2	11.0	71 ... 160	—	—	86900	110100	48800	47600
	310ML4	**726**	2.1	26500	6.5	11.0	71 ... 160	—	—	88500	112200	51000	47600

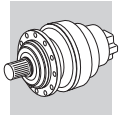

310M L

338

33640 Nm

n_1 min-1		i	n_2 min-1	M_{n2} Nm	P_{n1} kW	P_t kW	P (IEC)	Rn_2 [N] MC	MZ	HC/PC	HZ/PZ	FZ	$M_{2\,max}$ Nm
1500	**310ML4**	**798**	1.9	27000	6.0	11.0	71 ... 160	—	—	89700	113700	52700	47600
	310ML4	**974**	1.5	32000	5.8	11.0	71 ... 160	—	—	92300	117000	56300	47600
	310ML4	**1002**	1.5	28100	5.0	11.0	71 ... 160	—	—	92700	117500	56800	47600
	310ML4	**1164**	1.3	28800	4.4	11.0	71 ... 160	—	—	94700	120000	59700	47600
	310ML4	**1259**	1.2	24800	3.5	11.0	71 ... 160	—	—	95700	121400	61300	47600
	310ML4	**1438**	1.0	23800	2.9	11.0	71 ... 160	—	—	97600	123700	64100	47600
	310ML4	**1672**	0.90	23900	2.5	11.0	71 ... 160	—	—	99700	126400	65000	47600
	310ML4	**1794**	0.84	23900	2.4	11.0	71 ... 160	—	—	100700	127700	65000	47600
	310ML4	**2022**	0.74	23900	2.1	11.0	71 ... 160	—	—	102400	129900	65000	47600
	310ML4	**2523**	0.59	23900	1.7	11.0	71 ... 160	—	—	105700	134100	65000	47600
1000	**310ML1**	**4.09**	244	13200	175	42	200 ... 250	—	—	29900	37900	10400	47600
	310ML1	**5.25**	190	13900	175	42	200 ... 250	—	—	32200	40900	11300	47600
	310ML1	**6.23**	160	14400	175	42	200 ... 250	—	—	33900	43000	12000	47600
	310ML2	**14.7**	68	16800	75	26.4	160 ... 250	—	—	43900	55700	15900	47600
	310ML2	**17.4**	58	17400	75	26.4	160 ... 250	—	—	46100	58500	16800	47600
	310ML2	**21.8**	46	18100	75	26.4	160 ... 250	—	—	49400	62600	18200	47600
	310ML2	**25.4**	39	18500	75	26.4	160 ... 250	—	—	51700	65500	19100	47600
	310ML2	**28**	36	20900	75	26.4	160 ... 250	—	—	53200	67500	19700	47600
	310ML2	**30.7**	33	17700	64	26.4	160 ... 250	—	—	54700	69400	20300	47600
	310ML2	**32.6**	31	21000	72	26.4	160 ... 250	—	—	55700	70600	20800	47600
	310ML2	**38.6**	25.9	17800	51	26.4	160 ... 250	—	—	58600	74300	22000	47600
	310ML2	**46.7**	21.4	17800	42	26.4	160 ... 250	—	—	62100	78700	23400	47600
	310ML3	**53**	18.9	21600	40	21.6	132 ... 200	—	—	64500	81800	24400	47600
	310ML3	**62.6**	16.0	22400	40	21.6	132 ... 200	—	—	67800	85900	25800	47600
	310ML3	**73.9**	13.5	24600	38	21.6	132 ... 200	—	—	71200	90300	27300	47600
	310ML3	**80.3**	12.4	21300	30	21.6	132 ... 200	—	—	73000	92600	28000	47600
	310ML3	**92.7**	10.8	25700	32	21.6	132 ... 200	—	—	76300	96700	29400	47600
	310ML3	**101**	9.9	21700	24.7	21.6	132 ... 200	—	—	78000	98900	30300	47600
	310ML3	**108**	9.3	26700	28.4	21.6	132 ... 200	—	—	78000	98900	30900	47600
	310ML3	**119**	8.4	21900	21.1	21.6	132 ... 200	—	—	78000	98900	32000	47600
	310ML3	**135**	7.4	27700	23.5	21.6	132 ... 200	—	—	78000	98900	33400	47600
	310ML3	**149**	6.7	22300	17.1	21.6	132 ... 200	—	—	78000	98900	34500	47600
	310ML3	**164**	6.1	27000	18.9	21.6	132 ... 200	—	—	78000	98900	35600	47600
	310ML3	**177**	5.6	18000	11.6	21.6	132 ... 200	—	—	78000	98900	36500	47600
	310ML3	**202**	5.0	22700	12.9	21.6	132 ... 200	—	—	78100	99000	38100	47600
	310ML3	**230**	4.3	19300	9.6	21.6	132 ... 200	—	—	79600	100900	39800	47600
	310ML3	**249**	4.0	18700	8.6	21.6	132 ... 200	—	—	80500	102100	40900	47600
	310ML3	**295**	3.4	23900	9.3	21.6	132 ... 200	—	—	82500	104600	43300	47600
	310ML3	**350**	2.9	19900	6.5	21.6	132 ... 200	—	—	84500	107200	45800	47600
	310ML4	**392**	2.6	20300	6.1	13.2	71 ... 160	—	—	85900	108900	47600	47600
	310ML4	**453**	2.2	29000	7.6	13.2	71 ... 160	—	—	87700	111200	49900	47600
	310ML4	**507**	2.0	26700	6.2	13.2	71 ... 160	—	—	89100	113000	51800	47600
	310ML4	**590**	1.7	27400	5.5	13.2	71 ... 160	—	—	91000	115400	54500	47600
	310ML4	**637**	1.6	27800	5.2	13.2	71 ... 160	—	—	92000	116700	55900	47600
	310ML4	**726**	1.4	28500	4.6	13.2	71 ... 160	—	—	93800	118900	58400	47600
	310ML4	**798**	1.3	28900	4.3	13.2	71 ... 160	—	—	95100	120500	60300	47600
	310ML4	**974**	1.0	33100	4.0	13.2	71 ... 160	—	—	97800	124000	64400	47600
	310ML4	**1002**	1.0	30100	3.6	13.2	71 ... 160	—	—	98200	124500	65000	47600
	310ML4	**1164**	0.86	30100	3.1	13.2	71 ... 160	—	—	100300	127200	65000	47600
	310ML4	**1259**	0.79	24800	2.3	13.2	71 ... 160	—	—	101400	128600	65000	47600
	310ML4	**1438**	0.70	23900	2.0	13.2	71 ... 160	—	—	103400	131100	65000	47600
	310ML4	**1672**	0.60	23900	1.7	13.2	71 ... 160	—	—	105600	133900	65000	47600
	310ML4	**1794**	0.56	23900	1.6	13.2	71 ... 160	—	—	106700	135300	65000	47600
	310ML4	**2022**	0.49	23900	1.4	13.2	71 ... 160	—	—	108600	137600	65000	47600
	310ML4	**2523**	0.40	23900	1.1	13.2	71 ... 160	—	—	112000	142100	65000	47600
500	**310ML1**	**4.09**	122	16200	175	70	200 ... 250	—	—	36800	46700	13100	47600
	310ML1	**5.25**	95	17100	175	70	200 ... 250	—	—	39700	50300	14200	47600
	310ML1	**6.23**	80	17000	147	70	200 ... 250	—	—	41800	53000	15100	47600
	310ML2	**14.7**	34	20100	75	44	160 ... 250	—	—	54100	68500	20100	47600

B

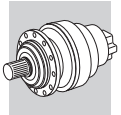

310M L

338

33640 Nm

n_1 min^{-1}		i	n_2 min^{-1}	M_{n2} Nm	P_{n1} kW	P_t kW	P (IEC)	Rn_2 [N] MC	MZ	HC/PC	HZ/PZ	FZ	$M_{2\,max}$ Nm
500	**310ML2**	**17.4**	28.8	20700	66	44	160 ... 250	—	—	56800	72000	21200	47600
	310ML2	**21.8**	22.9	21500	55	44	160 ... 250	—	—	60800	77100	22900	47600
	310ML2	**25.4**	19.7	21500	47	44	160 ... 250	—	—	63600	80700	24100	47600
	310ML2	**28**	17.9	21300	42	44	160 ... 250	—	—	65500	83100	24900	47600
	310ML2	**30.7**	16.3	18600	34	44	160 ... 250	—	—	67400	85400	25600	47600
	310ML2	**32.6**	15.4	21400	37	44	160 ... 250	—	—	68600	87000	26100	47600
	310ML2	**38.6**	12.9	17800	25.7	44	160 ... 250	—	—	72200	91500	27700	47600
	310ML2	**46.7**	10.7	17800	21.2	44	160 ... 250	—	—	76400	96900	29500	47600
	310ML3	**53**	9.4	26400	28.6	36	132 ... 200	—	—	78000	98900	30800	47600
	310ML3	**62.6**	8.0	26900	24.6	36	132 ... 200	—	—	78000	98900	32500	47600
	310ML3	**73.9**	6.8	28100	21.8	36	132 ... 200	—	—	78000	98900	34400	47600
	310ML3	**80.3**	6.2	22400	16.0	36	132 ... 200	—	—	78000	98900	35300	47600
	310ML3	**92.7**	5.4	29000	17.9	36	132 ... 200	—	—	78000	98900	37100	47600
	310ML3	**101**	5.0	22700	12.9	36	132 ... 200	—	—	78100	99000	38100	47600
	310ML3	**108**	4.6	28100	14.9	36	132 ... 200	—	—	78800	100000	39000	47600
	310ML3	**119**	4.2	23400	11.3	36	132 ... 200	—	—	80000	101400	40300	47600
	310ML3	**135**	3.7	29900	12.7	36	132 ... 200	—	—	81400	103300	42000	47600
	310ML3	**149**	3.3	24400	9.4	36	132 ... 200	—	—	82600	104700	43400	47600
	310ML3	**164**	3.1	27200	9.5	36	132 ... 200	—	—	83700	106100	44800	47600
	310ML3	**177**	2.8	19900	6.4	36	132 ... 200	—	—	84600	107300	46000	47600
	310ML3	**202**	2.5	25700	7.3	36	132 ... 200	—	—	86200	109300	48000	47600
	310ML3	**230**	2.2	19400	4.8	36	132 ... 200	—	—	87900	111400	50200	47600
	310ML3	**249**	2.0	21200	4.9	36	132 ... 200	—	—	88900	112700	51500	47600
	310ML3	**295**	1.7	24800	4.8	36	132 ... 200	—	—	91000	115400	54500	47600
	310ML3	**350**	1.4	22500	3.7	36	132 ... 200	—	—	93300	118300	57700	47600
	310ML4	**392**	1.3	22900	3.5	22.0	71 ... 160	—	—	94800	120200	59900	47600
	310ML4	**453**	1.1	29000	3.8	22.0	71 ... 160	—	—	96800	122700	62900	47600
	310ML4	**507**	0.99	30100	3.5	22.0	71 ... 160	—	—	98400	124700	65000	47600
	310ML4	**590**	0.85	30100	3.0	22.0	71 ... 160	—	—	100500	127400	65000	47600
	310ML4	**637**	0.79	30100	2.8	22.0	71 ... 160	—	—	101600	128800	65000	47600
	310ML4	**726**	0.69	30100	2.5	22.0	71 ... 160	—	—	103500	131300	65000	47600
	310ML4	**798**	0.63	30100	2.2	22.0	71 ... 160	—	—	104900	133100	65000	47600
	310ML4	**974**	0.51	33200	2.0	22.0	71 ... 160	—	—	108000	136900	65000	47600
	310ML4	**1002**	0.50	30100	1.8	22.0	71 ... 160	—	—	108400	137500	65000	47600
	310ML4	**1164**	0.43	30100	1.5	22.0	71 ... 160	—	—	110800	140400	65000	47600
	310ML4	**1259**	0.40	24800	1.2	22.0	71 ... 160	—	—	112000	142000	65000	47600
	310ML4	**1438**	0.35	23900	0.98	22.0	71 ... 160	—	—	114200	144700	65000	47600
	310ML4	**1672**	0.30	23900	0.85	22.0	71 ... 160	—	—	116600	147900	65000	47600
	310ML4	**1794**	0.28	23900	0.79	22.0	71 ... 160	—	—	117800	149400	65000	47600
	310ML4	**2022**	0.25	23900	0.70	22.0	71 ... 160	—	—	119800	152000	65000	47600
	310ML4	**2523**	0.20	23900	0.56	22.0	71 ... 160	—	—	123700	156800	65000	47600

311M L

350

49210 Nm

n_1 min^{-1}		i	n_2 min^{-1}	M_{n2} Nm	P_{n1} kW	P_t kW	P (IEC)	Rn_2 [N] MC	MZ	HC/PC	HZ/PZ	FZ	$M_{2\,max}$ Nm
1500	**311ML1**	**4.09**	367	16600	200	35	200 ... 250	—	—	33300	42400	9080	58300
	311ML1	**5.25**	286	17500	200	35	200 ... 250	—	—	35800	45700	9870	58300
	311ML1	**6.23**	241	18200	200	35	200 ... 250	—	—	37700	48100	10400	58300
	311ML2	**14.0**	107	20300	115	26.0	180 ... 250	—	—	48100	61400	13700	58300
	311ML2	**16.7**	90	20900	115	26.0	180 ... 250	—	—	50800	64700	14500	58300
	311ML2	**18.0**	83	25300	115	26.0	180 ... 250	—	—	51900	66200	14900	58300
	311ML2	**21.5**	70	20800	115	26.0	180 ... 250	—	—	54700	69800	15800	58300
	311ML2	**25.5**	59	22800	115	26.0	180 ... 250	—	—	57600	73400	16700	58300
	311ML2	**27.6**	54	28200	115	26.0	180 ... 250	—	—	59000	75200	17200	58300
	311ML2	**32.7**	46	28900	115	26.0	180 ... 250	—	—	62100	79200	18200	58300
	311ML2	**38.8**	39	27200	115	26.0	180 ... 250	—	—	65300	83300	19200	58300
	311ML3	**50.5**	29.7	27600	60	18.0	132 ... 200	—	—	70700	90200	21000	58300

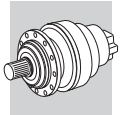

311M L

350

49210 Nm

n_1 min^{-1}		i	n_2 min^{-1}	M_{n2} Nm	P_{n1} kW	P_t kW	P (IEC)	Rn_2 [N] MC	MZ	HC/PC	HZ/PZ	FZ	$M_{2\,max}$ Nm
1500	**311ML3**	**60.2**	24.9	30700	60	18.0	132 ... 200	—	—	74500	95100	22300	58300
	311ML3	**71.1**	21.1	32200	60	18.0	132 ... 200	—	—	78300	99900	23500	58300
	311ML3	**77.3**	19.4	32600	60	18.0	132 ... 200	—	—	80300	100000	24200	58300
	311ML3	**89.3**	16.8	34500	60	18.0	132 ... 200	—	—	83900	100000	25400	58300
	311ML3	**104**	14.5	36100	60	18.0	132 ... 200	—	—	87700	100000	26700	58300
	311ML3	**115**	13.1	34000	51	18.0	132 ... 200	—	—	90400	100000	27600	58300
	311ML3	**133**	11.3	34600	45	18.0	132 ... 200	—	—	94600	100000	29000	58300
	311ML3	**147**	10.2	34900	41	18.0	132 ... 200	—	—	97400	100000	30000	58300
	311ML3	**161**	9.3	35200	38	18.0	132 ... 200	—	—	98000	100000	30900	58300
	311ML3	**171**	8.8	35300	36	18.0	132 ... 200	—	—	98000	100000	31500	58300
	311ML3	**191**	7.8	32000	28.8	18.0	132 ... 200	—	—	98000	100000	32700	58300
	311ML3	**203**	7.4	35700	30	18.0	132 ... 200	—	—	98000	100000	33400	58300
	311ML3	**245**	6.1	36200	25.4	18.0	132 ... 200	—	—	98000	100000	35500	58300
	311ML3	**291**	5.2	27500	16.2	18.0	132 ... 200	—	—	98000	100000	37600	58300
	311ML4	**348**	4.3	45700	23.3	11.0	71 ... 160	—	—	100100	102100	39900	58300
	311ML4	**410**	3.7	46000	19.9	11.0	71 ... 160	—	—	102500	104600	42200	58300
	311ML4	**512**	2.9	46300	16.0	11.0	71 ... 160	—	—	105800	107900	45400	58300
	311ML4	**568**	2.6	41000	12.8	11.0	71 ... 160	—	—	107300	109500	47000	58300
	311ML4	**627**	2.4	41700	11.8	11.0	71 ... 160	—	—	108900	111100	48600	58300
	311ML4	**825**	1.8	43500	9.4	11.0	71 ... 160	—	—	113200	115500	53300	58300
	311ML4	**986**	1.5	44800	8.1	11.0	71 ... 160	—	—	116200	118500	56500	58300
	311ML4	**1058**	1.4	45300	7.6	11.0	71 ... 160	—	—	117300	119700	57900	58300
	311ML4	**1230**	1.2	46300	6.7	11.0	71 ... 160	—	—	119900	122300	60800	58300
	311ML4	**1415**	1.1	41200	5.2	11.0	71 ... 160	—	—	122300	124800	63800	58300
	311ML4	**1680**	0.89	36500	3.9	11.0	71 ... 160	—	—	125300	127900	65000	58300
	311ML4	**1766**	0.85	41300	4.1	11.0	71 ... 160	—	—	126200	128800	65000	58300
	311ML4	**2096**	0.72	36500	3.1	11.0	71 ... 160	—	—	129400	132000	65000	58300
1000	**311ML1**	**4.09**	244	18800	200	42	200 ... 250	—	—	37600	47900	10400	58300
	311ML1	**5.25**	190	19700	200	42	200 ... 250	—	—	40500	51600	11300	58300
	311ML1	**6.23**	160	20500	200	42	200 ... 250	—	—	42600	54400	12000	58300
	311ML2	**14.0**	71	22900	115	31.2	180 ... 250	—	—	54400	69300	15700	58300
	311ML2	**16.7**	60	23600	115	31.2	180 ... 250	—	—	57300	73100	16600	58300
	311ML2	**18.0**	56	28600	115	31.2	180 ... 250	—	—	58600	74700	17000	58300
	311ML2	**21.5**	47	23500	115	31.2	180 ... 250	—	—	61800	78800	18100	58300
	311ML2	**25.5**	39	25100	109	31.2	180 ... 250	—	—	65000	83000	19100	58300
	311ML2	**27.6**	36	30100	115	31.2	180 ... 250	—	—	66600	84900	19600	58300
	311ML2	**32.7**	31	30400	103	31.2	180 ... 250	—	—	70100	89400	20800	58300
	311ML2	**38.8**	25.8	27200	78	31.2	180 ... 250	—	—	73800	94100	22000	58300
	311ML3	**50.5**	19.8	29300	60	21.6	132 ... 200	—	—	79800	100000	24000	58300
	311ML3	**60.2**	16.6	34600	60	21.6	132 ... 200	—	—	84200	100000	25500	58300
	311ML3	**71.1**	14.1	36400	59	21.6	132 ... 200	—	—	88500	100000	26900	58300
	311ML3	**77.3**	12.9	34100	51	21.6	132 ... 200	—	—	90700	100000	27700	58300
	311ML3	**89.3**	11.2	39000	50	21.6	132 ... 200	—	—	94700	100000	29000	58300
	311ML3	**104**	9.6	40600	45	21.6	132 ... 200	—	—	98000	100000	30500	58300
	311ML3	**115**	8.7	35300	35	21.6	132 ... 200	—	—	98000	100000	31600	58300
	311ML3	**133**	7.5	35700	31	21.6	132 ... 200	—	—	98000	100000	33200	58300
	311ML3	**147**	6.8	35900	28.0	21.6	132 ... 200	—	—	98000	100000	34300	58300
	311ML3	**161**	6.2	36200	25.8	21.6	132 ... 200	—	—	98000	100000	35400	58300
	311ML3	**171**	5.9	36300	24.4	21.6	132 ... 200	—	—	98000	100000	36100	58300
	311ML3	**191**	5.2	32000	19.2	21.6	132 ... 200	—	—	98000	100000	37400	58300
	311ML3	**203**	4.9	36800	20.8	21.6	132 ... 200	—	—	98200	100200	38200	58300
	311ML3	**245**	4.1	38000	17.8	21.6	132 ... 200	—	—	100900	103000	40700	58300
	311ML3	**291**	3.4	29400	11.6	21.6	132 ... 200	—	—	103400	105500	43100	58300
	311ML4	**348**	2.9	46400	15.8	13.2	71 ... 160	—	—	106100	108200	45700	58300
	311ML4	**410**	2.4	46700	13.4	13.2	71 ... 160	—	—	108600	110800	48300	58300

B

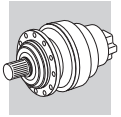

311M L	350	49210 Nm

n_1 min^{-1}		i	n_2 min^{-1}	M_{n2} Nm	P_{n1} kW	P_t kW	P (IEC)	Rn_2 [N] MC	MZ	HC/PC	HZ/PZ	FZ	$M_{2\,max}$ Nm
	311ML4	512	2	47300	10.9	13.2	71 ... 160	—	—	112100	114400	52000	58300
	311ML4	568	1.8	43700	9.1	13.2	71 ... 160	—	—	113700	116100	53800	58300
1000	311ML4	627	1.6	44400	8.4	13.2	71 ... 160	—	—	115400	117700	55600	58300
	311ML4	825	1.2	46400	6.7	13.2	71 ... 160	—	—	120000	122400	61000	58300
	311ML4	986	1	47700	5.7	13.2	71 ... 160	—	—	123100	125600	64700	58300
	311ML4	1058	0.94	47800	5.3	13.2	71 ... 160	—	—	124300	126900	65000	58300
	311ML4	1230	0.81	47800	4.6	13.2	71 ... 160	—	—	127000	129600	65000	58300
	311ML4	1415	0.71	41300	3.4	13.2	71 ... 160	—	—	129600	132300	65000	58300
	311ML4	1680	0.6	36500	2.6	13.2	71 ... 160	—	—	132800	135500	65000	58300
	311ML4	1766	0.57	41300	2.8	13.2	71 ... 160	—	—	133800	136500	65000	58300
	311ML4	2096	0.48	36500	2.1	13.2	71 ... 160	—	—	137100	139900	65000	58300
500	311ML1	4.09	122	23100	200	70	200 ... 250	—	—	46200	59000	13100	58300
	311ML1	5.25	95	24300	200	70	200 ... 250	—	—	49800	63600	14200	58300
	311ML1	6.23	80	24700	200	70	200 ... 250	—	—	52500	66900	15100	58300
	311ML2	14.0	36	26800	106	52	180 ... 250	—	—	66900	85400	19800	58300
	311ML2	16.7	29.9	29000	97	52	180 ... 250	—	—	70600	90000	20900	58300
	311ML2	18.0	27.8	31400	97	52	180 ... 250	—	—	72100	92000	21500	58300
	311ML2	21.5	23.3	28100	73	52	180 ... 250	—	—	76100	97000	22800	58300
	311ML2	25.5	19.6	28400	62	52	180 ... 250	—	—	80100	100000	24100	58300
	311ML2	27.6	18.1	32600	66	52	180 ... 250	—	—	82000	100000	24700	58300
	311ML2	32.7	15.3	33200	56	52	180 ... 250	—	—	86300	100000	26200	58300
	311ML2	38.8	12.9	27200	39	52	180 ... 250	—	—	90800	100000	27700	58300
	311ML3	50.5	9.9	32400	37	36	132 ... 200	—	—	98000	100000	30300	58300
	311ML3	60.2	8.3	41600	40	36	132 ... 200	—	—	98000	100000	32100	58300
	311ML3	71.1	7.0	42800	35	36	132 ... 200	—	—	98000	100000	33900	58300
	311ML3	77.3	6.5	36100	26.8	36	132 ... 200	—	—	98000	100000	34900	58300
	311ML3	89.3	5.6	44600	28.6	36	132 ... 200	—	—	98000	100000	36600	58300
	311ML3	104	4.8	45500	25.2	36	132 ... 200	—	—	98500	100500	38500	58300
	311ML3	115	4.4	37600	18.8	36	132 ... 200	—	—	99900	102000	39800	58300
	311ML3	133	3.8	38600	16.6	36	132 ... 200	—	—	102100	104200	41800	58300
	311ML3	147	3.4	39200	15.3	36	132 ... 200	—	—	103500	105700	43200	58300
	311ML3	161	3.1	39900	14.2	36	132 ... 200	—	—	104900	107000	44600	58300
	311ML3	171	2.9	40300	13.5	36	132 ... 200	—	—	105800	108000	45400	58300
	311ML3	191	2.6	32000	9.6	36	132 ... 200	—	—	107500	109700	47200	58300
	311ML3	203	2.5	41200	11.6	36	132 ... 200	—	—	108400	110600	48100	58300
	311ML3	245	2.0	41200	9.6	36	132 ... 200	—	—	111400	113700	51300	58300
	311ML3	291	1.7	33200	6.5	36	132 ... 200	—	—	114200	116500	54300	58300
	311ML4	348	1.4	48200	8.2	22.0	71 ... 160	—	—	117100	119500	57600	58300
	311ML4	410	1.2	48600	7.0	22.0	71 ... 160	—	—	119900	122300	60900	58300
	311ML4	512	0.98	49200	5.7	22.0	71 ... 160	—	—	123800	126300	65000	58300
	311ML4	568	0.88	47800	5.0	22.0	71 ... 160	—	—	125600	128200	65000	58300
	311ML4	627	0.80	47800	4.5	22.0	71 ... 160	—	—	127400	130000	65000	58300
	311ML4	825	0.61	47800	3.4	22.0	71 ... 160	—	—	132500	135200	65000	58300
	311ML4	986	0.51	47800	2.9	22.0	71 ... 160	—	—	135900	138700	65000	58300
	311ML4	1058	0.47	47800	2.7	22.0	71 ... 160	—	—	137300	140100	65000	58300
	311ML4	1230	0.41	47800	2.3	22.0	71 ... 160	—	—	140300	143100	65000	58300
	311ML4	1415	0.35	41300	1.7	22.0	71 ... 160	—	—	143100	146000	65000	58300
	311ML4	1680	0.30	36500	1.3	22.0	71 ... 160	—	—	146600	149600	65000	58300
	311ML4	1766	0.28	41300	1.4	22.0	71 ... 160	—	—	147700	150700	65000	58300
	311ML4	2096	0.24	36500	1.0	22.0	71 ... 160	—	—	151400	154400	65000	58300

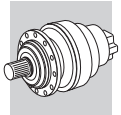

313M L

362

60940 Nm

n_1 min^{-1}		i	n_2 min^{-1}	M_{n2} Nm	P_{n1} kW	P_t kW	P (IEC)	Rn_2 [N] MC	MZ	HC/PC	HZ/PZ	FZ	$M_{2\,max}$ Nm
1500	**313ML2**	**14.2**	106	28200	150	30	180 ... 250	—	—	70000	82000	16900	105000
	313ML2	**16.9**	89	29000	150	30	180 ... 250	—	—	73800	86500	18000	105000
	313ML2	**18.5**	81	35600	150	30	180 ... 250	—	—	75800	88800	18500	105000
	313ML2	**21.8**	69	30500	150	30	180 ... 250	—	—	79600	93200	19500	105000
	313ML2	**25.8**	58	31700	150	30	180 ... 250	—	—	83800	98100	20700	105000
	313ML2	**28.4**	53	39800	150	30	180 ... 250	—	—	86100	100900	21300	105000
	313ML2	**33.6**	45	40100	150	30	180 ... 250	—	—	90700	106300	22600	105000
	313ML2	**40.5**	37	30200	124	30	180 ... 250	—	—	95900	112300	24000	105000
	313ML3	**51.1**	29.3	31700	60	18.0	132 ... 200	—	—	102800	120500	25900	105000
	313ML3	**61.0**	24.6	37800	60	18.0	132 ... 200	—	—	108400	127000	27500	105000
	313ML3	**72.0**	20.8	39100	60	18.0	132 ... 200	—	—	113900	133500	29100	105000
	313ML3	**78.3**	19.2	42800	60	18.0	132 ... 200	—	—	116800	136900	29900	105000
	313ML3	**92.4**	16.2	44600	60	18.0	132 ... 200	—	—	122800	143900	31600	105000
	313ML3	**110**	13.7	45200	60	18.0	132 ... 200	—	—	129300	151500	33500	105000
	313ML3	**120**	12.4	41300	59	18.0	132 ... 200	—	—	133000	155800	34500	105000
	313ML3	**135**	11.1	49100	60	18.0	132 ... 200	—	—	137500	161200	35800	105000
	313ML3	**143**	10.5	41400	50	18.0	132 ... 200	—	—	140000	164000	36500	105000
	313ML3	**151**	9.9	41400	47	18.0	132 ... 200	—	—	142000	166400	37200	105000
	313ML3	**163**	9.2	50800	54	18.0	132 ... 200	—	—	142000	166400	38200	105000
	313ML3	**176**	8.5	41800	41	18.0	132 ... 200	—	—	142000	166400	39100	105000
	313ML3	**182**	8.2	30200	28.6	18.0	132 ... 200	—	—	142000	166400	39600	105000
	313ML3	**194**	7.7	48600	43	18.0	132 ... 200	—	—	142000	166400	40400	105000
	313ML3	**209**	7.2	42200	35	18.0	132 ... 200	—	—	142000	166400	41400	105000
	313ML3	**252**	5.9	42700	29.1	18.0	132 ... 200	—	—	142000	166400	44200	105000
	313ML3	**304**	4.9	30300	17.2	18.0	132 ... 200	—	—	142300	166700	47000	105000
	313ML4	**394**	3.8	56400	25.4	11.0	71 ... 160	—	—	147600	173000	51200	105000
	313ML4	**452**	3.3	56800	22.3	11.0	71 ... 160	—	—	150600	176400	53600	105000
	313ML4	**514**	2.9	47400	16.4	11.0	71 ... 160	—	—	153300	179700	56000	105000
	313ML4	**564**	2.7	54200	17.1	11.0	71 ... 160	—	—	155400	182100	57700	105000
	313ML4	**633**	2.4	48800	13.7	11.0	71 ... 160	—	—	158000	185100	60000	105000
	313ML4	**695**	2.2	50000	12.8	11.0	71 ... 160	—	—	160100	187600	61900	105000
	313ML4	**790**	1.9	49300	11.1	11.0	71 ... 160	—	—	163100	191100	64600	105000
	313ML4	**889**	1.7	52200	10.4	11.0	71 ... 160	—	—	165800	194300	67200	105000
	313ML4	**1014**	1.5	53400	9.3	11.0	71 ... 160	—	—	169000	198000	70200	105000
	313ML4	**1117**	1.3	50100	8.0	11.0	71 ... 160	—	—	171300	200800	72500	105000
	313ML4	**1266**	1.2	55500	7.8	11.0	71 ... 160	—	—	174400	204400	75600	105000
	313ML4	**1394**	1.1	50600	6.4	11.0	71 ... 160	—	—	176800	207200	78100	105000
	313ML4	**1502**	1.0	57100	6.7	11.0	71 ... 160	—	—	178700	209500	80000	105000
	313ML4	**1817**	0.83	57100	5.6	11.0	71 ... 160	—	—	183700	215200	80000	105000
	313ML4	**2187**	0.69	40100	3.3	11.0	71 ... 160	—	—	188600	221000	80000	105000
1000	**313ML1**	**4.14**	241	26300	250	54	—	—	—	54600	64000	12800	105000
	313ML1	**5.40**	185	27700	250	54	—	—	—	59200	69300	14000	105000
	313ML1	**6.50**	154	26500	250	54	—	—	—	62500	73300	14900	105000
	313ML2	**14.2**	70	31800	150	36	180 ... 250	—	—	79100	92700	19400	105000
	313ML2	**16.9**	59	32800	150	36	180 ... 250	—	—	83400	97700	20500	105000
	313ML2	**18.5**	54	40200	150	36	180 ... 250	—	—	85600	100300	21200	105000
	313ML2	**21.8**	46	34300	150	36	180 ... 250	—	—	89900	105300	22300	105000
	313ML2	**25.8**	39	35300	150	36	180 ... 250	—	—	94600	110800	23600	105000
	313ML2	**28.4**	35	40700	150	36	180 ... 250	—	—	97300	114000	24400	105000
	313ML2	**33.6**	29.7	40400	134	36	180 ... 250	—	—	102400	120000	25800	105000
	313ML2	**40.5**	24.7	30200	83	36	180 ... 250	—	—	108300	126900	27500	105000
	313ML3	**51.1**	19.6	35800	60	21.6	132 ... 200	—	—	116100	136100	29700	105000
	313ML3	**61.0**	16.4	42700	60	21.6	132 ... 200	—	—	122400	143500	31500	105000
	313ML3	**72.0**	13.9	44200	60	21.6	132 ... 200	—	—	128700	150800	33300	105000
	313ML3	**78.3**	12.8	47400	60	21.6	132 ... 200	—	—	132000	154600	34200	105000
	313ML3	**92.4**	10.8	49400	60	21.6	132 ... 200	—	—	138700	162500	36200	105000
	313ML3	**110**	9.1	48600	51	21.6	132 ... 200	—	—	142000	166400	38300	105000
	313ML3	**120**	8.3	41900	40	21.6	132 ... 200	—	—	142000	166400	39500	105000
	313ML3	**135**	7.4	52600	45	21.6	132 ... 200	—	—	142000	166400	41000	105000
	313ML3	**143**	7.0	42300	34	21.6	132 ... 200	—	—	142000	166400	41800	105000
	313ML3	**151**	6.6	42400	32	21.6	132 ... 200	—	—	142000	166400	42600	105000

B

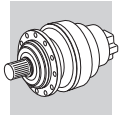

313M L	362	60940 Nm

n_1 min^{-1}		i	n_2 min^{-1}	M_{n2} Nm	P_{n1} kW	P_t kW	P (IEC)	Rn_2 [N] MC	MZ	HC/PC	HZ/PZ	FZ	$M_{2\,max}$ Nm
1000	**313ML3**	**163**	6.1	53000	37	21.6	132 ... 200	—	—	142000	166400	43700	105000
	313ML3	**176**	5.7	42800	28.0	21.6	132 ... 200	—	—	142000	166400	44800	105000
	313ML3	**182**	5.5	30300	19.1	21.6	132 ... 200	—	—	142000	166400	45300	105000
	313ML3	**194**	5.2	48600	28.8	21.6	132 ... 200	—	—	142000	166400	46300	105000
	313ML3	**209**	4.8	43500	23.9	21.6	132 ... 200	—	—	142900	167400	47400	105000
	313ML3	**252**	4.0	44900	20.4	21.6	132 ... 200	—	—	146800	172000	50600	105000
	313ML3	**304**	3.3	32600	12.3	21.6	132 ... 200	—	—	150700	176600	53800	105000
	313ML4	**394**	2.5	57600	17.3	13.2	71 ... 160	—	—	156400	183300	58700	105000
	313ML4	**452**	2.2	58100	15.2	13.2	71 ... 160	—	—	159500	186900	61400	105000
	313ML4	**514**	1.9	50900	11.7	13.2	71 ... 160	—	—	162500	190400	64100	105000
	313ML4	**564**	1.8	54200	11.4	13.2	71 ... 160	—	—	164700	193000	66100	105000
	313ML4	**633**	1.6	49700	9.3	13.2	71 ... 160	—	—	167400	196200	68700	105000
	313ML4	**695**	1.4	53600	9.1	13.2	71 ... 160	—	—	169700	198800	70900	105000
	313ML4	**790**	1.3	50200	7.5	13.2	71 ... 160	—	—	172800	202500	74000	105000
	313ML4	**889**	1.1	56000	7.4	13.2	71 ... 160	—	—	175700	205900	76900	105000
	313ML4	**1014**	0.99	57100	6.7	13.2	71 ... 160	—	—	179100	209800	80000	105000
	313ML4	**1117**	0.9	50800	5.4	13.2	71 ... 160	—	—	181600	212700	80000	105000
	313ML4	**1266**	0.79	57100	5.3	13.2	71 ... 160	—	—	184800	216600	80000	105000
	313ML4	**1394**	0.72	50800	4.3	13.2	71 ... 160	—	—	187400	219600	80000	105000
	313ML4	**1502**	0.67	57100	4.5	13.2	71 ... 160	—	—	189400	221900	80000	105000
	313ML4	**1817**	0.55	57100	3.7	13.2	71 ... 160	—	—	192000	228100	80000	105000
	313ML4	**2187**	0.46	40100	2.2	13.2	71 ... 160	—	—	192000	231000	80000	105000
500	**313ML1**	**4.14**	121	32400	250	90	—	—	—	67300	78800	16200	105000
	313ML1	**5.40**	93	34200	250	90	—	—	—	72800	85300	17700	105000
	313ML1	**6.50**	77	30200	250	90	—	—	—	77000	90200	18800	105000
	313ML2	**14.2**	35	37800	148	60	180 ... 250	—	—	97300	114100	24400	105000
	313ML2	**16.9**	29.5	39000	128	60	180 ... 250	—	—	102600	120300	25900	105000
	313ML2	**18.5**	27.0	41200	124	60	180 ... 250	—	—	105400	123500	26700	105000
	313ML2	**21.8**	23.0	40900	105	60	180 ... 250	—	—	110600	129600	28100	105000
	313ML2	**25.8**	19.4	41600	90	60	180 ... 250	—	—	116500	136500	29800	105000
	313ML2	**28.4**	17.6	41100	81	60	180 ... 250	—	—	119800	140400	30700	105000
	313ML2	**33.6**	14.9	41100	68	60	180 ... 250	—	—	126100	147800	32500	105000
	313ML2	**40.5**	12.3	30200	41	60	180 ... 250	—	—	133300	156200	34600	105000
	313ML3	**51.1**	9.8	43900	49	36	132 ... 200	—	—	142000	166400	37400	105000
	313ML3	**61.0**	8.2	51200	48	36	132 ... 200	—	—	142000	166400	39700	105000
	313ML3	**72.0**	6.9	52300	42	36	132 ... 200	—	—	142000	166400	41900	105000
	313ML3	**78.3**	6.4	53700	39	36	132 ... 200	—	—	142000	166400	43100	105000
	313ML3	**92.4**	5.4	55000	34	36	132 ... 200	—	—	142000	166400	45600	105000
	313ML3	**110**	4.6	48600	25.4	36	132 ... 200	—	—	143900	168600	48300	105000
	313ML3	**120**	4.1	44600	21.2	36	132 ... 200	—	—	145800	170900	49800	105000
	313ML3	**135**	3.7	56500	24.0	36	132 ... 200	—	—	148200	173700	51700	105000
	313ML3	**143**	3.5	45900	18.4	36	132 ... 200	—	—	149400	175100	52700	105000
	313ML3	**151**	3.3	46400	17.6	36	132 ... 200	—	—	150600	176500	53700	105000
	313ML3	**163**	3.1	54100	19.0	36	132 ... 200	—	—	152300	178400	55100	105000
	313ML3	**176**	2.8	47600	15.5	36	132 ... 200	—	—	153900	180400	56500	105000
	313ML3	**182**	2.7	33600	10.6	36	132 ... 200	—	—	154700	181300	57100	105000
	313ML3	**194**	2.6	48600	14.4	36	132 ... 200	—	—	156100	182900	58300	105000
	313ML3	**209**	2.4	49000	13.5	36	132 ... 200	—	—	157700	184800	59800	105000
	313ML3	**252**	2.0	50700	11.5	36	132 ... 200	—	—	162100	189900	63700	105000
	313ML3	**304**	1.6	36800	6.9	36	132 ... 200	—	—	166400	195000	67800	105000
	313ML4	**394**	1.3	60100	9.0	22.0	71 ... 160	—	—	172700	202400	73900	105000
	313ML4	**452**	1.1	60600	7.9	22.0	71 ... 160	—	—	176100	206400	77300	105000
	313ML4	**514**	0.97	57100	6.6	22.0	71 ... 160	—	—	179400	210200	80000	105000
	313ML4	**564**	0.89	54200	5.7	22.0	71 ... 160	—	—	181800	213000	80000	105000
	313ML4	**633**	0.79	50800	4.7	22.0	71 ... 160	—	—	184800	216600	80000	105000
	313ML4	**695**	0.72	57100	4.9	22.0	71 ... 160	—	—	187300	219500	80000	105000
	313ML4	**790**	0.63	50800	3.8	22.0	71 ... 160	—	—	190800	223600	80000	105000
	313ML4	**889**	0.56	57100	3.8	22.0	71 ... 160	—	—	192000	227400	80000	105000
	313ML4	**1014**	0.49	57100	3.3	22.0	71 ... 160	—	—	192000	231000	80000	105000
	313ML4	**1117**	0.45	50800	2.7	22.0	71 ... 160	—	—	192000	231000	80000	105000
	313ML4	**1266**	0.40	57100	2.7	22.0	71 ... 160	—	—	192000	231000	80000	105000

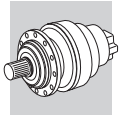

313M L — 362 — 60940 Nm

n_1 min^{-1}		i	n_2 min^{-1}	M_{n2} Nm	P_{n1} kW	P_t kW	P (IEC)	Rn_2 [N] MC	MZ	HC/PC	HZ/PZ	FZ	$M_{2\,max}$ Nm
500	**313ML4**	**1394**	0.36	50800	2.2	22.0	71 ... 160	—	—	192000	231000	80000	105000
	313ML4	**1502**	0.33	57100	2.2	22.0	71 ... 160	—	—	192000	231000	80000	105000
	313ML4	**1817**	0.28	57100	1.9	22.0	71 ... 160	—	—	192000	231000	80000	105000
	313ML4	**2187**	0.23	40100	1.1	22.0	71 ... 160	—	—	192000	231000	80000	105000

314M L — 374 — 80640 Nm

n_1 min^{-1}		i	n_2 min^{-1}	M_{n2} Nm	P_{n1} kW	P_t kW	P (IEC)	Rn_2 [N] MC	MZ	HC/PC	HZ/PZ	FZ	$M_{2\,max}$ Nm
1500	**314ML2**	**17.4**	86	38500	175	40	200 ... 250	—	—	69200	82900	20400	115000
	314ML2	**22.3**	67	40500	175	40	200 ... 250	—	—	74500	89400	22100	115000
	314ML2	**26.5**	57	42100	175	40	200 ... 250	—	—	78500	94100	23400	115000
	314ML2	**28.0**	54	50800	175	40	200 ... 250	—	—	79800	95700	23900	115000
	314ML2	**33.2**	45	51700	175	40	200 ... 250	—	—	84000	100700	25300	115000
	314ML2	**38.6**	39	47400	175	40	200 ... 250	—	—	87900	105400	26600	115000
	314ML3	**62.6**	24.0	49200	75	25.0	160 ... 250	—	—	101600	121800	31200	115000
	314ML3	**73.9**	20.3	50900	75	25.0	160 ... 250	—	—	106700	128000	33000	115000
	314ML3	**92.7**	16.2	53100	75	25.0	160 ... 250	—	—	114300	137000	35600	115000
	314ML3	**108**	13.9	55000	75	25.0	160 ... 250	—	—	119500	143400	37400	115000
	314ML3	**138**	10.8	69500	75	25.0	160 ... 250	—	—	128800	154500	40700	115000
	314ML3	**164**	9.1	59500	62	25.0	160 ... 250	—	—	132000	158300	43100	115000
	314ML3	**174**	8.6	60200	60	25.0	160 ... 250	—	—	132000	158300	43900	115000
	314ML3	**206**	7.3	60900	51	25.0	160 ... 250	—	—	132000	158300	46400	115000
	314ML3	**240**	6.3	47800	34	25.0	160 ... 250	—	—	132000	158300	48800	115000
	314ML4	**314**	4.8	75700	40	15.0	132 ... 200	—	—	132900	159300	53400	115000
	314ML4	**394**	3.8	74700	34	15.0	132 ... 200	—	—	137200	164600	57600	115000
	314ML4	**458**	3.3	74800	29.0	15.0	132 ... 200	—	—	140200	168200	60600	115000
	314ML4	**495**	3.0	75600	27.1	15.0	132 ... 200	—	—	141800	170000	62200	115000
	314ML4	**575**	2.6	67200	20.7	15.0	132 ... 200	—	—	144900	173700	65400	115000
	314ML4	**588**	2.6	72400	21.9	15.0	132 ... 200	—	—	145300	174300	65900	115000
	314ML4	**668**	2.2	76300	20.2	15.0	132 ... 200	—	—	148000	177500	68700	115000
	314ML4	**738**	2.0	73700	17.7	15.0	132 ... 200	—	—	150100	180000	71000	115000
	314ML4	**858**	1.7	74600	15.4	15.0	132 ... 200	—	—	153400	183900	74700	115000
	314ML4	**926**	1.6	70200	13.4	15.0	132 ... 200	—	—	155100	186000	76600	115000
	314ML4	**1038**	1.4	75700	12.9	15.0	132 ... 200	—	—	157600	189000	79600	115000
	314ML4	**1099**	1.4	71300	11.5	15.0	132 ... 200	—	—	158900	190600	81100	115000
	314ML4	**1277**	1.2	72300	10.0	15.0	132 ... 200	—	—	162400	194700	85300	115000
	314ML4	**1485**	1.0	63100	7.5	15.0	132 ... 200	—	—	165900	198900	89700	115000
	314ML4	**1796**	0.84	63300	6.2	15.0	132 ... 200	—	—	170500	204400	90000	115000
1000	**314ML2**	**17.4**	58	43400	175	48	200 ... 250	—	—	78100	93700	23300	115000
	314ML2	**22.3**	45	45700	175	48	200 ... 250	—	—	84200	100900	25300	115000
	314ML2	**26.5**	38	46100	175	48	200 ... 250	—	—	88600	106300	26800	115000
	314ML2	**28.0**	36	53400	175	48	200 ... 250	—	—	90100	108100	27300	115000
	314ML2	**33.2**	30	53800	175	48	200 ... 250	—	—	94800	113700	28900	115000
	314ML2	**38.6**	25.9	47400	137	48	200 ... 250	—	—	99200	119000	30400	115000
	314ML3	**62.6**	16.0	55600	75	30	160 ... 250	—	—	114700	137500	35700	115000
	314ML3	**73.9**	13.5	57500	75	30	160 ... 250	—	—	120500	144600	37800	115000
	314ML3	**92.7**	10.8	59900	74	30	160 ... 250	—	—	129000	154800	40700	115000
	314ML3	**108**	9.3	62100	66	30	160 ... 250	—	—	132000	158300	42800	115000
	314ML3	**138**	7.2	71700	59	30	160 ... 250	—	—	132000	158300	46500	115000
	314ML3	**164**	6.1	59500	42	30	160 ... 250	—	—	132000	158300	49300	115000
	314ML3	**174**	5.8	61800	41	30	160 ... 250	—	—	132000	158300	50200	115000
	314ML3	**206**	4.9	62500	35	30	160 ... 250	—	—	132600	159000	53200	115000
	314ML3	**240**	4.2	49500	23.7	30	160 ... 250	—	—	135400	162400	55900	115000
	314ML4	**314**	3.2	75700	28.5	18.0	132 ... 200	—	—	140800	168800	61200	115000
	314ML4	**394**	2.5	75700	22.7	18.0	132 ... 200	—	—	145400	174400	66000	115000

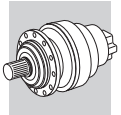

314M L

374

80640 Nm

n_1 min^{-1}		i	n_2 min^{-1}	M_{n2} Nm	P_{n1} kW	P_t kW	P (IEC)	Rn_2 [N] MC	MZ	HC/PC	HZ/PZ	FZ	$M_{2\,max}$ Nm
1000	**314ML4**	**458**	2.2	76400	19.7	18.0	132 ... 200	—	—	148600	178200	69400	115000
	314ML4	**495**	2.0	76800	18.4	18.0	132 ... 200	—	—	150200	180200	71200	115000
	314ML4	**575**	1.7	69700	14.3	18.0	132 ... 200	—	—	153500	184100	74800	115000
	314ML4	**588**	1.7	74700	15.0	18.0	132 ... 200	—	—	154000	184700	75400	115000
	314ML4	**668**	1.5	78400	13.9	18.0	132 ... 200	—	—	156800	188100	78700	115000
	314ML4	**738**	1.4	76100	12.2	18.0	132 ... 200	—	—	159100	190800	81300	115000
	314ML4	**858**	1.2	77100	10.6	18.0	132 ... 200	—	—	162500	194900	85500	115000
	314ML4	**926**	1.1	72800	9.3	18.0	132 ... 200	—	—	164300	197000	87700	115000
	314ML4	**1038**	0.96	78000	8.9	18.0	132 ... 200	—	—	167000	200300	90000	115000
	314ML4	**1099**	0.91	73300	7.9	18.0	132 ... 200	—	—	168400	201900	90000	115000
	314ML4	**1277**	0.78	73300	6.8	18.0	132 ... 200	—	—	172000	206300	90000	115000
	314ML4	**1485**	0.67	63300	5.0	18.0	132 ... 200	—	—	175800	210800	90000	115000
	314ML4	**1796**	0.56	63300	4.2	18.0	132 ... 200	—	—	180600	216600	90000	115000
500	**314ML1**	**4.25**	118	41700	260	110	—	—	—	63000	75600	18400	115000
	314ML1	**5.33**	94	43100	260	110	—	—	—	67500	80900	19800	115000
	314ML1	**6.20**	81	43500	260	110	—	—	—	70600	84600	20800	115000
	314ML2	**17.4**	28.8	52900	169	80	200 ... 250	—	—	96100	115300	29400	115000
	314ML2	**22.3**	22.4	56100	140	80	200 ... 250	—	—	103600	124300	31900	115000
	314ML2	**26.5**	18.9	52700	111	80	200 ... 250	—	—	109100	130800	33800	115000
	314ML2	**28.0**	17.9	56800	113	80	200 ... 250	—	—	110900	133000	34400	115000
	314ML2	**33.2**	15.0	57400	96	80	200 ... 250	—	—	116800	140000	36500	115000
	314ML2	**38.6**	12.9	47400	68	80	200 ... 250	—	—	122200	146500	38300	115000
	314ML3	**62.6**	8.0	67500	62	50	160 ... 250	—	—	132000	158300	45000	115000
	314ML3	**73.9**	6.8	69800	54	50	160 ... 250	—	—	132000	158300	47600	115000
	314ML3	**92.7**	5.4	73800	46	50	160 ... 250	—	—	132000	158300	51300	115000
	314ML3	**108**	4.6	74900	40	50	160 ... 250	—	—	133400	160000	54000	115000
	314ML3	**138**	3.6	72400	30	50	160 ... 250	—	—	138300	165800	58600	115000
	314ML3	**164**	3.0	59500	20.8	50	160 ... 250	—	—	141700	169900	62100	115000
	314ML3	**174**	2.9	66400	21.9	50	160 ... 250	—	—	142800	171300	63300	115000
	314ML3	**206**	2.4	67700	18.8	50	160 ... 250	—	—	146400	175500	67000	115000
	314ML3	**240**	2.1	55700	13.3	50	160 ... 250	—	—	149500	179300	70400	115000
	314ML4	**314**	1.6	78100	14.7	30	132 ... 200	—	—	155400	186400	77100	115000
	314ML4	**394**	1.3	79300	11.9	30	132 ... 200	—	—	160600	192600	83100	115000
	314ML4	**458**	1.1	80200	10.3	30	132 ... 200	—	—	164100	196700	87400	115000
	314ML4	**495**	1.0	80600	9.6	30	132 ... 200	—	—	165900	198900	89700	115000
	314ML4	**575**	0.87	73300	7.5	30	132 ... 200	—	—	169500	203200	90000	115000
	314ML4	**588**	0.85	78000	7.8	30	132 ... 200	—	—	170000	203900	90000	115000
	314ML4	**668**	0.75	80600	7.1	30	132 ... 200	—	—	173200	207700	90000	115000
	314ML4	**738**	0.68	78000	6.3	30	132 ... 200	—	—	175600	210600	90000	115000
	314ML4	**858**	0.58	78000	5.4	30	132 ... 200	—	—	179400	215200	90000	115000
	314ML4	**926**	0.54	73300	4.7	30	132 ... 200	—	—	181400	217600	90000	115000
	314ML4	**1038**	0.48	78000	4.4	30	132 ... 200	—	—	184400	221100	90000	115000
	314ML4	**1099**	0.46	73300	3.9	30	132 ... 200	—	—	185900	222900	90000	115000
	314ML4	**1277**	0.39	73300	3.4	30	132 ... 200	—	—	189900	227800	90000	115000
	314ML4	**1485**	0.34	63300	2.5	30	132 ... 200	—	—	194100	232700	90000	115000
	314ML4	**1796**	0.28	63300	2.1	30	132 ... 200	—	—	199400	239200	90000	115000

315M L

386

100800 Nm

n_1 min^{-1}		i	n_2 min^{-1}	M_{n2} Nm	P_{n1} kW	P_t kW	P (IEC)	Rn_2 [N] MC	MZ	HC/PC	HZ/PZ	FZ	$M_{2\,max}$ Nm
1500	**315ML2**	**17.4**	86	57200	200	42	200 ... 250	—	—	69200	82900	20400	135000
	315ML2	**22.3**	67	61600	200	42	200 ... 250	—	—	74500	89400	22100	135000
	315ML2	**26.5**	57	64900	200	42	200 ... 250	—	—	78500	94100	23400	135000
	315ML2	**28.0**	54	63700	200	42	200 ... 250	—	—	79800	95700	23900	135000
	315ML2	**33.2**	45	65600	200	42	200 ... 250	—	—	84000	100700	25300	135000
	315ML2	**38.6**	39	59200	200	42	200 ... 250	—	—	87900	105400	26600	135000

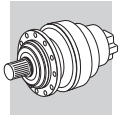

315M L	386	100800 Nm

n_1 min^{-1}		i	n_2 min^{-1}	M_{n2} Nm	P_{n1} kW	P_t kW	P (IEC)	Rn_2 [N] MC	MZ	HC/PC	HZ/PZ	FZ	$M_{2\,max}$ Nm
1500	**315ML3**	**59.6**	25.2	75800	115	30	180 ... 250	—	—	100100	120000	30700	135000
	315ML3	**71.1**	21.1	77700	115	30	180 ... 250	—	—	105500	126500	32600	135000
	315ML3	**91.3**	16.4	80700	115	30	180 ... 250	—	—	113700	136400	35400	135000
	315ML3	**108**	13.8	83200	115	30	180 ... 250	—	—	119700	143600	37500	135000
	315ML3	**139**	10.8	87800	109	30	180 ... 250	—	—	129000	154700	40700	135000
	315ML3	**165**	9.1	89700	94	30	180 ... 250	—	—	132000	158300	43100	135000
	315ML3	**174**	8.6	75300	74	30	180 ... 250	—	—	132000	158300	43900	135000
	315ML3	**207**	7.2	76100	63	30	180 ... 250	—	—	132000	158300	46500	135000
	315ML3	**241**	6.2	59700	43	30	180 ... 250	—	—	132000	158300	48900	135000
	315ML4	**302**	5.0	94600	56	18.0	132 ... 200	—	—	132100	158500	52800	135000
	315ML4	**370**	4.1	94600	45	18.0	132 ... 200	—	—	136000	163100	56400	135000
	315ML4	**441**	3.4	94600	38	18.0	132 ... 200	—	—	139500	167300	59800	135000
	315ML4	**487**	3.1	94600	34	18.0	132 ... 200	—	—	141500	169600	61800	135000
	315ML4	**533**	2.8	94600	31	18.0	132 ... 200	—	—	143300	171900	63800	135000
	315ML4	**591**	2.5	94600	28.4	18.0	132 ... 200	—	—	145400	174400	66000	135000
	315ML4	**672**	2.2	95400	25.2	18.0	132 ... 200	—	—	148100	177600	68900	135000
	315ML4	**741**	2.0	96000	23.0	18.0	132 ... 200	—	—	150200	180100	71200	135000
	315ML4	**862**	1.7	97000	20.0	18.0	132 ... 200	—	—	153500	184100	74800	135000
	315ML4	**930**	1.6	87800	16.7	18.0	132 ... 200	—	—	155200	186100	76800	135000
	315ML4	**1043**	1.4	98300	16.7	18.0	132 ... 200	—	—	157700	189100	79700	135000
	315ML4	**1104**	1.4	89100	14.3	18.0	132 ... 200	—	—	159000	190700	81300	135000
	315ML4	**1284**	1.2	90400	12.5	18.0	132 ... 200	—	—	162500	194800	85400	135000
	315ML4	**1492**	1.0	79000	9.4	18.0	132 ... 200	—	—	166000	199100	89800	135000
	315ML4	**1805**	0.83	79100	7.8	18.0	132 ... 200	—	—	170600	204600	90000	135000
1000	**315ML2**	**17.4**	58	64600	200	50	200 ... 250	—	—	78100	93700	23300	135000
	315ML2	**22.3**	45	68600	200	50	200 ... 250	—	—	84200	100900	25300	135000
	315ML2	**26.5**	38	70700	200	50	200 ... 250	—	—	88600	106300	26800	135000
	315ML2	**28.0**	36	67000	200	50	200 ... 250	—	—	90100	108100	27300	135000
	315ML2	**33.2**	30	67900	200	50	200 ... 250	—	—	94800	113700	28900	135000
	315ML2	**38.6**	25.9	59200	171	50	200 ... 250	—	—	99200	119000	30400	135000
	315ML3	**59.6**	16.8	81300	115	36	180 ... 250	—	—	113000	135500	35200	135000
	315ML3	**71.1**	14.1	83600	115	36	180 ... 250	—	—	119200	142900	37300	135000
	315ML3	**91.3**	11.0	87300	110	36	180 ... 250	—	—	128400	154000	40500	135000
	315ML3	**108**	9.2	89600	95	36	180 ... 250	—	—	132000	158300	42900	135000
	315ML3	**139**	7.2	91600	76	36	180 ... 250	—	—	132000	158300	46600	135000
	315ML3	**165**	6.1	93000	65	36	180 ... 250	—	—	132000	158300	49400	135000
	315ML3	**174**	5.7	77200	51	36	180 ... 250	—	—	132000	158300	50300	135000
	315ML3	**207**	4.8	78200	43	36	180 ... 250	—	—	132700	159100	53200	135000
	315ML3	**241**	4.2	61900	29.5	36	180 ... 250	—	—	135500	162500	56000	135000
	315ML4	**302**	3.3	94600	37	21.6	132 ... 200	—	—	140000	167900	60400	135000
	315ML4	**370**	2.7	94600	30	21.6	132 ... 200	—	—	144100	172800	64600	135000
	315ML4	**441**	2.3	95300	25.5	21.6	132 ... 200	—	—	147800	177200	68500	135000
	315ML4	**487**	2.1	95900	23.3	21.6	132 ... 200	—	—	149900	179800	70800	135000
	315ML4	**533**	1.9	96500	21.4	21.6	132 ... 200	—	—	151900	182100	73000	135000
	315ML4	**591**	1.7	97200	19.5	21.6	132 ... 200	—	—	154100	184800	75500	135000
	315ML4	**672**	1.5	98100	17.3	21.6	132 ... 200	—	—	156900	188200	78800	135000
	315ML4	**741**	1.3	98700	15.8	21.6	132 ... 200	—	—	159200	190900	81500	135000
	315ML4	**862**	1.2	99800	13.7	21.6	132 ... 200	—	—	162600	195000	85700	135000
	315ML4	**930**	1.1	91000	11.6	21.6	132 ... 200	—	—	164400	197200	87900	135000
	315ML4	**1043**	0.96	100800	11.4	21.6	132 ... 200	—	—	167100	200400	90000	135000
	315ML4	**1104**	0.91	91600	9.8	21.6	132 ... 200	—	—	168500	202100	90000	135000
	315ML4	**1284**	0.78	91600	8.4	21.6	132 ... 200	—	—	172200	206500	90000	135000
	315ML4	**1492**	0.67	79100	6.3	21.6	132 ... 200	—	—	175900	210900	90000	135000
	315ML4	**1805**	0.55	79100	5.2	21.6	132 ... 200	—	—	180700	216800	90000	135000
500	**315ML1**	**4.25**	118	52100	260	120	—	—	—	63000	75600	18400	135000
	315ML1	**5.33**	94	53900	260	120	—	—	—	67500	80900	19800	135000
	315ML1	**6.20**	81	54300	260	120	—	—	—	70600	84600	20800	135000

B

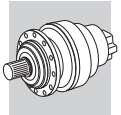

315M L

386

100800 Nm

n_1 min^{-1}		i	n_2 min^{-1}	M_{n2} Nm	P_{n1} kW	P_t kW	P (IEC)	Rn_2 [N] MC	MZ	HC/PC	HZ/PZ	FZ	$M_{2\,max}$ Nm
500	**315ML2**	**17.4**	28.8	74100	200	84	200 ... 250	—	—	96100	115300	29400	135000
	315ML2	**22.3**	22.4	77400	193	84	200 ... 250	—	—	103600	124300	31900	135000
	315ML2	**26.5**	18.9	79700	167	84	200 ... 250	—	—	109100	130800	33800	135000
	315ML2	**28.0**	17.9	71000	141	84	200 ... 250	—	—	110900	133000	34400	135000
	315ML2	**33.2**	15.0	72100	121	84	200 ... 250	—	—	116800	140000	36500	135000
	315ML2	**38.6**	12.9	59200	85	84	200 ... 250	—	—	122200	146500	38300	135000
	315ML3	**59.6**	8.4	90300	87	60	180 ... 250	—	—	132000	158300	44300	135000
	315ML3	**71.1**	7.0	91800	74	60	180 ... 250	—	—	132000	158300	47000	135000
	315ML3	**91.3**	5.5	93800	59	60	180 ... 250	—	—	132000	158300	51100	135000
	315ML3	**108**	4.6	94600	50	60	180 ... 250	—	—	133500	160100	54100	135000
	315ML3	**139**	3.6	94600	39	60	180 ... 250	—	—	138400	165900	58700	135000
	315ML3	**165**	3.0	94600	33	60	180 ... 250	—	—	141800	170000	62200	135000
	315ML3	**174**	2.9	83000	27.3	60	180 ... 250	—	—	142900	171400	63400	135000
	315ML3	**207**	2.4	84600	23.4	60	180 ... 250	—	—	146500	175600	67100	135000
	315ML3	**241**	2.1	69700	16.6	60	180 ... 250	—	—	149600	179500	70500	135000
	315ML4	**302**	1.7	97400	19.0	36	132 ... 200	—	—	154600	185400	76100	135000
	315ML4	**370**	1.4	98700	15.8	36	132 ... 200	—	—	159100	190800	81400	135000
	315ML4	**441**	1.1	99900	13.4	36	132 ... 200	—	—	163200	195700	86300	135000
	315ML4	**487**	1.0	100600	12.2	36	132 ... 200	—	—	165500	198500	89200	135000
	315ML4	**533**	0.94	100800	11.2	36	132 ... 200	—	—	167700	201100	90000	135000
	315ML4	**591**	0.85	100800	10.1	36	132 ... 200	—	—	170100	204000	90000	135000
	315ML4	**672**	0.74	100800	8.9	36	132 ... 200	—	—	173300	207800	90000	135000
	315ML4	**741**	0.67	100800	8.0	36	132 ... 200	—	—	175700	210800	90000	135000
	315ML4	**862**	0.58	100800	6.9	36	132 ... 200	—	—	179600	215300	90000	135000
	315ML4	**930**	0.54	91600	5.8	36	132 ... 200	—	—	181500	217700	90000	135000
	315ML4	**1043**	0.48	100800	5.7	36	132 ... 200	—	—	184500	221300	90000	135000
	315ML4	**1104**	0.45	91600	4.9	36	132 ... 200	—	—	186000	223100	90000	135000
	315ML4	**1284**	0.39	91600	4.2	36	132 ... 200	—	—	190100	227900	90000	135000
	315ML4	**1492**	0.34	79100	3.1	36	132 ... 200	—	—	194200	232900	90000	135000
	315ML4	**1805**	0.28	79100	2.6	36	132 ... 200	—	—	199600	239300	90000	135000

316M L

398

134390 Nm

n_1 min^{-1}		i	n_2 min^{-1}	M_{n2} Nm	P_{n1} kW	P_t kW	P (IEC)	Rn_2 [N] MC	MZ	HC/PC	HZ/PZ	FZ	$M_{2\,max}$ Nm
1500	**316ML2**	**17.4**	86	68500	200	50	200 ... 250	—	—	105800	118700	33900	192000
	316ML2	**21.8**	69	78800	200	50	200 ... 250	—	—	113300	127100	36600	192000
	316ML2	**22.3**	67	72100	200	50	200 ... 250	—	—	114000	127900	36900	192000
	316ML2	**26.5**	57	75000	200	50	200 ... 250	—	—	120100	134700	39100	192000
	316ML2	**28.0**	54	85000	200	50	200 ... 250	—	—	122100	137000	39800	192000
	316ML2	**33.2**	45	87500	200	50	200 ... 250	—	—	128500	144200	42100	192000
	316ML3	**59.6**	25.2	83700	115	35	180 ... 250	—	—	153200	171800	51200	192000
	316ML3	**71.1**	21.1	86100	115	35	180 ... 250	—	—	161500	181200	54300	192000
	316ML3	**76.5**	19.6	99900	115	35	180 ... 250	—	—	165100	185200	55600	192000
	316ML3	**89.3**	16.8	91900	115	35	180 ... 250	—	—	172900	193900	58600	192000
	316ML3	**96.0**	15.6	95800	115	35	180 ... 250	—	—	176700	198200	60000	192000
	316ML3	**114**	13.2	97200	115	35	180 ... 250	—	—	186000	208700	63500	192000
	316ML3	**117**	12.8	111000	115	35	180 ... 250	—	—	187600	210400	64100	192000
	316ML3	**139**	10.8	116100	115	35	180 ... 250	—	—	197400	221500	67900	192000
	316ML3	**165**	9.1	113600	115	35	180 ... 250	—	—	202000	226600	71900	192000
	316ML3	**174**	8.6	99500	98	35	180 ... 250	—	—	202000	226600	73200	192000
	316ML3	**207**	7.2	99500	83	35	180 ... 250	—	—	202000	226600	77500	192000
	316ML4	**215**	7.0	117100	60	18.0	132 ... 200	—	—	202000	226600	78500	192000
	316ML4	**253**	5.9	120300	60	18.0	132 ... 200	—	—	202000	226600	82900	192000
	316ML4	**275**	5.4	123100	60	18.0	132 ... 200	—	—	202000	226600	85300	192000
	316ML4	**318**	4.7	123900	60	18.0	132 ... 200	—	—	203700	228500	89400	192000
	316ML4	**346**	4.3	101800	52	18.0	132 ... 200	—	—	206100	231200	92000	192000

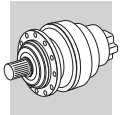

316M L

398

134390 Nm

n_1 min^{-1}		i	n_2 min^{-1}	M_{n2} Nm	P_{n1} kW	P_t kW	P (IEC)	Rn_2 [N] MC	MZ	HC/PC	HZ/PZ	FZ	$M_{2\,max}$ Nm
1500	**316ML4**	**399**	3.8	104200	46	18.0	132 ... 200	—	—	210400	236000	96500	192000
	316ML4	**447**	3.4	125100	50	18.0	132 ... 200	—	—	213800	239900	100200	192000
	316ML4	**500**	3.0	125500	44	18.0	132 ... 200	—	—	217300	243800	104000	192000
	316ML4	**563**	2.7	113600	36	18.0	132 ... 200	—	—	221000	247900	108200	192000
	316ML4	**628**	2.4	111800	32	18.0	132 ... 200	—	—	224500	251800	112200	192000
	316ML4	**706**	2.1	113200	28.4	18.0	132 ... 200	—	—	228300	256100	116700	192000
	316ML4	**784**	1.9	114400	25.9	18.0	132 ... 200	—	—	231700	259900	120800	192000
	316ML4	**880**	1.7	115500	23.3	18.0	132 ... 200	—	—	235600	264300	125600	192000
1000	**316ML4**	**1020**	1.5	117500	20.4	18.0	132 ... 200	—	—	240600	269900	131900	192000
	316ML4	**1104**	1.4	118400	19.0	18.0	132 ... 200	—	—	243300	273000	135400	192000
	316ML4	**1237**	1.2	117200	16.8	18.0	132 ... 200	—	—	247300	277400	140700	192000
	316ML4	**1308**	1.1	120500	16.3	18.0	132 ... 200	—	—	249300	279700	143300	192000
	316ML4	**1553**	0.97	122200	14.0	18.0	132 ... 200	—	—	255500	286600	150000	192000
	316ML2	**17.4**	58	77400	200	60	200 ... 250	—	—	119500	134100	38900	192000
	316ML2	**21.8**	46	87400	200	60	200 ... 250	—	—	127900	143500	41900	192000
	316ML2	**22.3**	45	81000	200	60	200 ... 250	—	—	128800	144500	42200	192000
	316ML2	**26.5**	38	83100	200	60	200 ... 250	—	—	135600	152100	44700	192000
	316ML2	**28.0**	36	89300	200	60	200 ... 250	—	—	137900	154700	45500	192000
	316ML2	**33.2**	30	90600	200	60	200 ... 250	—	—	145100	162800	48200	192000
	316ML3	**59.6**	16.8	94500	115	42	180 ... 250	—	—	173000	194000	58600	192000
	316ML3	**71.1**	14.1	97200	115	42	180 ... 250	—	—	182400	204600	62100	192000
	316ML3	**76.5**	13.1	110800	115	42	180 ... 250	—	—	186400	209100	63700	192000
	316ML3	**89.3**	11.2	97800	115	42	180 ... 250	—	—	195200	219000	67000	192000
	316ML3	**96.0**	10.4	99200	115	42	180 ... 250	—	—	199500	223800	68700	192000
	316ML3	**114**	8.8	99500	100	42	180 ... 250	—	—	202000	226600	72700	192000
	316ML3	**117**	8.5	119700	115	42	180 ... 250	—	—	202000	226600	73400	192000
	316ML3	**139**	7.2	121000	100	42	180 ... 250	—	—	202000	226600	77700	192000
	316ML3	**165**	6.1	113600	79	42	180 ... 250	—	—	202000	226600	82300	192000
	316ML3	**174**	5.7	99500	65	42	180 ... 250	—	—	202000	226600	83800	192000
	316ML3	**207**	4.8	100100	55	42	180 ... 250	—	—	203000	227700	88700	192000
	316ML4	**215**	4.7	123900	60	21.6	132 ... 200	—	—	204000	228900	89800	192000
	316ML4	**253**	3.9	124500	58	21.6	132 ... 200	—	—	208900	234400	94900	192000
	316ML4	**275**	3.6	124800	54	21.6	132 ... 200	—	—	211400	237200	97600	192000
	316ML4	**318**	3.1	125300	47	21.6	132 ... 200	—	—	215800	242100	102400	192000
	316ML4	**346**	2.9	108700	37	21.6	132 ... 200	—	—	218400	245000	105300	192000
	316ML4	**399**	2.5	111300	33	21.6	132 ... 200	—	—	222900	250100	110400	192000
	316ML4	**447**	2.2	126600	33	21.6	132 ... 200	—	—	226600	254200	114700	192000
	316ML4	**500**	2.0	128100	30	21.6	132 ... 200	—	—	230300	258300	119100	192000
	316ML4	**563**	1.8	115300	24.2	21.6	132 ... 200	—	—	234200	262700	123900	192000
	316ML4	**628**	1.6	116500	21.9	21.6	132 ... 200	—	—	237900	266800	128500	192000
	316ML4	**706**	1.4	117900	19.7	21.6	132 ... 200	—	—	241900	271400	133600	192000
	316ML4	**784**	1.3	119200	18.0	21.6	132 ... 200	—	—	245500	275400	138300	192000
	316ML4	**880**	1.1	117500	15.8	21.6	132 ... 200	—	—	249600	280000	143700	192000
	316ML4	**1020**	0.98	122200	14.2	21.6	132 ... 200	—	—	254900	286000	150000	192000
	316ML4	**1104**	0.91	122200	13.1	21.6	132 ... 200	—	—	257800	289200	150000	192000
	316ML4	**1237**	0.81	118100	11.3	21.6	132 ... 200	—	—	262100	294000	150000	192000
	316ML4	**1308**	0.76	122200	11.0	21.6	132 ... 200	—	—	264200	296300	150000	192000
	316ML4	**1553**	0.64	122200	9.3	21.6	132 ... 200	—	—	270700	303700	150000	192000
500	**316ML1**	**4.25**	118	69500	280	136	—	—	—	96400	108200	30600	192000
	316ML1	**5.33**	94	71800	280	136	—	—	—	103200	115800	33000	192000
	316ML2	**17.4**	28.8	92100	200	100	200 ... 250	—	—	147100	165100	49000	192000
	316ML2	**21.8**	22.9	92700	200	100	200 ... 250	—	—	157500	176700	52800	192000
	316ML2	**22.3**	22.4	96600	200	100	200 ... 250	—	—	158600	177900	53200	192000
	316ML2	**26.5**	18.9	97900	200	100	200 ... 250	—	—	166900	187300	56300	192000
	316ML2	**28.0**	17.9	94700	188	100	200 ... 250	—	—	169700	190400	57400	192000
	316ML2	**33.2**	15.0	96100	161	100	200 ... 250	—	—	178700	200500	60800	192000
	316ML3	**59.6**	8.4	113600	109	70	180 ... 250	—	—	202000	226600	73800	192000
	316ML3	**71.1**	7.0	115500	93	70	180 ... 250	—	—	202000	226600	78300	192000
	316ML3	**76.5**	6.5	121700	91	70	180 ... 250	—	—	202000	226600	80200	192000

B

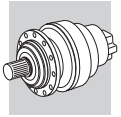

316M L

398

134390 Nm

n_1 min^{-1}		i	n_2 min^{-1}	M_{n2} Nm	P_{n1} kW	P_t kW	P (IEC)	Rn_2 [N] MC	MZ	HC/PC	HZ/PZ	FZ	$M_{2\,max}$ Nm
500	**316ML3**	**89.3**	5.6	99500	64	70	180 ... 250	—	—	202000	226600	84500	192000
	316ML3	**96.0**	5.2	99500	59	70	180 ... 250	—	—	202000	226600	86500	192000
	316ML3	**114**	4.4	101600	51	70	180 ... 250	—	—	205800	230900	91600	192000
	316ML3	**117**	4.3	124300	61	70	180 ... 250	—	—	206600	231800	92500	192000
	316ML3	**139**	3.6	124900	52	70	180 ... 250	—	—	211700	237500	97900	192000
	316ML3	**165**	3.0	113600	40	70	180 ... 250	—	—	217000	243400	103700	192000
	316ML3	**174**	2.9	108900	36	70	180 ... 250	—	—	218700	245400	105600	192000
	316ML3	**207**	2.4	111700	31	70	180 ... 250	—	—	224100	251400	111800	192000
	316ML4	**215**	2.3	126400	35	36	132 ... 200	—	—	225300	252700	113100	192000
	316ML4	**253**	2.0	127100	29.7	36	132 ... 200	—	—	230700	258800	119600	192000
	316ML4	**275**	1.8	129000	27.7	36	132 ... 200	—	—	233500	261900	123000	192000
	316ML4	**318**	1.6	128000	23.8	36	132 ... 200	—	—	238300	267300	129000	192000
	316ML4	**346**	1.4	117700	20.1	36	132 ... 200	—	—	241200	270500	132600	192000
	316ML4	**399**	1.3	119400	17.7	36	132 ... 200	—	—	246100	276100	139100	192000
	316ML4	**447**	1.1	129400	17.1	36	132 ... 200	—	—	250200	280700	144500	192000
	316ML4	**500**	1.0	134400	15.9	36	132 ... 200	—	—	254300	285200	150000	192000
	316ML4	**563**	0.89	118100	12.4	36	132 ... 200	—	—	258600	290000	150000	192000
	316ML4	**628**	0.80	122200	11.5	36	132 ... 200	—	—	262600	294600	150000	192000
	316ML4	**706**	0.71	122200	10.2	36	132 ... 200	—	—	267100	299600	150000	192000
	316ML4	**784**	0.64	122200	9.2	36	132 ... 200	—	—	271100	304100	150000	192000
	316ML4	**880**	0.57	118100	7.9	36	132 ... 200	—	—	275600	309200	150000	192000
	316ML4	**1020**	0.49	122200	7.1	36	132 ... 200	—	—	281500	315700	150000	192000
	316ML4	**1104**	0.45	122200	6.5	36	132 ... 200	—	—	284700	319400	150000	192000
	316ML4	**1237**	0.40	118100	5.6	36	132 ... 200	—	—	289400	324600	150000	192000
	316ML4	**1308**	0.38	122200	5.5	36	132 ... 200	—	—	291700	327200	150000	192000
	316ML4	**1553**	0.32	122200	4.7	36	132 ... 200	—	—	298900	335300	150000	192000

317M L

408

207490 Nm

n_1 min^{-1}		i	n_2 min^{-1}	M_{n2} Nm	P_{n1} kW	P_t kW	P (IEC)	Rn_2 [N] MC	MZ	HC/PC	HZ/PZ	FZ	$M_{2\,max}$ Nm
1500	**317ML3**	**58.1**	25.8	111900	150	35	180 ... 250	—	—	236500	251200	50800	393000
	317ML3	**69.3**	21.6	115100	150	35	180 ... 250	—	—	249300	264900	53800	393000
	317ML3	**89.0**	16.9	121100	150	35	180 ... 250	—	—	268700	285500	58500	393000
	317ML3	**106**	14.2	125900	150	35	180 ... 250	—	—	282900	300500	61900	393000
	317ML3	**116**	12.9	155100	150	35	180 ... 250	—	—	291000	309100	63900	393000
	317ML3	**138**	10.9	162800	150	35	180 ... 250	—	—	306300	325400	67700	393000
	317ML3	**166**	9.1	121300	126	35	180 ... 250	—	—	314300	333900	72000	393000
	317ML3	**179**	8.4	144000	138	35	180 ... 250	—	—	314300	333900	73900	393000
	317ML3	**213**	7.1	145600	118	35	180 ... 250	—	—	314300	333900	78200	393000
	317ML3	**252**	5.9	113800	78	35	180 ... 250	—	—	314300	333900	82800	393000
	317ML4	**378**	4.0	181400	60	18.0	132 ... 200	—	—	324900	345100	94800	393000
	317ML4	**449**	3.3	184400	60	18.0	132 ... 200	—	—	332900	353700	100300	393000
	317ML4	**493**	3.0	166900	60	18.0	132 ... 200	—	—	337400	358400	103500	393000
	317ML4	**552**	2.7	193500	60	18.0	132 ... 200	—	—	342900	364300	107500	393000
	317ML4	**619**	2.4	167300	48	18.0	132 ... 200	—	—	348500	370300	111600	393000
	317ML4	**719**	2.1	169400	42	18.0	132 ... 200	—	—	356100	378300	117400	393000
	317ML4	**792**	1.9	193700	43	18.0	132 ... 200	—	—	361100	383600	121200	393000
	317ML4	**904**	1.7	156000	31	18.0	132 ... 200	—	—	367900	390900	126700	393000
	317ML4	**1032**	1.5	174400	30	18.0	132 ... 200	—	—	375000	398400	132400	393000
	317ML4	**1134**	1.3	156000	24.4	18.0	132 ... 200	—	—	380100	403800	136600	393000
	317ML4	**1318**	1.1	156000	21.0	18.0	132 ... 200	—	—	388300	412500	143700	393000
	317ML4	**1595**	0.94	156000	17.4	18.0	132 ... 200	—	—	399000	423900	150000	393000
	317ML4	**1893**	0.79	150300	14.1	18.0	132 ... 200	—	—	408900	434400	150000	393000
1000	**317ML2**	**16.9**	59	104300	250	66	—	—	—	184500	196000	38500	393000
	317ML2	**22.1**	45	109800	250	66	—	—	—	199800	212300	42100	393000
	317ML2	**26.6**	38	106800	250	66	—	—	—	211200	224400	44800	393000
	317ML2	**28.4**	35	123400	250	66	—	—	—	215300	228800	45700	393000
	317ML2	**34.1**	29.3	126000	250	66	—	—	—	227600	241800	48700	393000

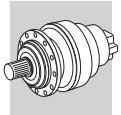

317M L	408	207490 Nm

n_1 min^{-1}		i	n_2 min^{-1}	M_{n2} Nm	P_{n1} kW	P_t kW	P (IEC)	Rn_2 [N] MC	MZ	HC/PC	HZ/PZ	FZ	$M_{2\,max}$ Nm
1000	**317ML2**	**40.5**	24.7	113000	250	66	—	—	—	239700	254600	51500	393000
	317ML3	**58.1**	17.2	126300	150	42	180 ... 250	—	—	267100	283700	58100	393000
	317ML3	**69.3**	14.4	130000	150	42	180 ... 250	—	—	281600	299200	61600	393000
	317ML3	**89.0**	11.2	136800	150	42	180 ... 250	—	—	303500	322400	67000	393000
	317ML3	**106**	9.5	142200	150	42	180 ... 250	—	—	314300	333900	70900	393000
	317ML3	**116**	8.6	166900	150	42	180 ... 250	—	—	314300	333900	73200	393000
	317ML3	**138**	7.3	166900	139	42	180 ... 250	—	—	314300	333900	77400	393000
	317ML3	**166**	6.0	121300	84	42	180 ... 250	—	—	314300	333900	82400	393000
	317ML3	**179**	5.6	147900	95	42	180 ... 250	—	—	314300	333900	84600	393000
	317ML3	**213**	4.7	149600	81	42	180 ... 250	—	—	317100	336800	89500	393000
	317ML3	**252**	4.0	118800	54	42	180 ... 250	—	—	324900	345200	94800	393000
	317ML4	**378**	2.6	194400	60	21.6	132 ... 200	—	—	344200	365700	108500	393000
	317ML4	**449**	2.2	193700	51	21.6	132 ... 200	—	—	352800	374800	114800	393000
	317ML4	**493**	2.0	169800	41	21.6	132 ... 200	—	—	357500	379800	118500	393000
	317ML4	**552**	1.8	200100	43	21.6	132 ... 200	—	—	363300	386000	123000	393000
	317ML4	**619**	1.6	172900	33	21.6	132 ... 200	—	—	369300	392300	127800	393000
	317ML4	**719**	1.4	175100	28.8	21.6	132 ... 200	—	—	377300	400900	134400	393000
	317ML4	**792**	1.3	193700	28.9	21.6	132 ... 200	—	—	382600	406400	138800	393000
	317ML4	**904**	1.1	156000	20.4	21.6	132 ... 200	—	—	389900	414200	145000	393000
	317ML4	**1032**	0.97	179800	20.6	21.6	132 ... 200	—	—	397300	422100	150000	393000
	317ML4	**1134**	0.88	156000	16.3	21.6	132 ... 200	—	—	402700	427800	150000	393000
	317ML4	**1318**	0.76	156000	14.0	21.6	132 ... 200	—	—	411500	437100	150000	393000
	317ML4	**1595**	0.63	156000	11.6	21.6	132 ... 200	—	—	422800	449200	150000	393000
	317ML4	**1893**	0.53	150300	9.4	21.6	132 ... 200	—	—	433300	460300	150000	393000
500	**317ML2**	**16.9**	29.5	126900	250	110	—	—	—	227200	241400	48500	393000
	317ML2	**22.1**	22.6	133100	250	110	—	—	—	246000	261300	53000	393000
	317ML2	**26.6**	18.8	114100	239	110	—	—	—	260100	276300	56400	393000
	317ML2	**28.4**	17.6	133500	250	110	—	—	—	265100	281600	57600	393000
	317ML2	**34.1**	14.7	136300	222	110	—	—	—	280300	297700	61300	393000
	317ML2	**40.5**	12.3	113000	155	110	—	—	—	295000	313400	64900	393000
	317ML3	**58.1**	8.6	155500	150	70	180 ... 250	—	—	314300	333900	73200	393000
	317ML3	**69.3**	7.2	160000	132	70	180 ... 250	—	—	314300	333900	77600	393000
	317ML3	**89.0**	5.6	168400	109	70	180 ... 250	—	—	314300	333900	84400	393000
	317ML3	**106**	4.7	173900	94	70	180 ... 250	—	—	316800	336500	89300	393000
	317ML3	**116**	4.3	166900	83	70	180 ... 250	—	—	321000	341000	92200	393000
	317ML3	**138**	3.6	166900	70	70	180 ... 250	—	—	329000	349500	97600	393000
	317ML3	**166**	3.0	121300	42	70	180 ... 250	—	—	337800	358900	103800	393000
	317ML3	**179**	2.8	154800	50	70	180 ... 250	—	—	341600	362900	106500	393000
	317ML3	**213**	2.4	156000	42	70	180 ... 250	—	—	350100	371900	112800	393000
	317ML3	**252**	2.0	133700	30	70	180 ... 250	—	—	358700	381100	119400	393000
	317ML4	**378**	1.3	204000	32	36	132 ... 200	—	—	380100	403800	136700	393000
	317ML4	**449**	1.1	193700	25.5	36	132 ... 200	—	—	389500	413800	144700	393000
	317ML4	**493**	1.0	179600	21.6	36	132 ... 200	—	—	394700	419400	149300	393000
	317ML4	**552**	0.91	207500	22.2	36	132 ... 200	—	—	401100	426200	150000	393000
	317ML4	**619**	0.81	179800	17.2	36	132 ... 200	—	—	407800	433200	150000	393000
	317ML4	**719**	0.70	179800	14.8	36	132 ... 200	—	—	416600	442600	150000	393000
	317ML4	**792**	0.63	193700	14.5	36	132 ... 200	—	—	422400	448800	150000	393000
	317ML4	**904**	0.55	156000	10.2	36	132 ... 200	—	—	430400	457300	150000	393000
	317ML4	**1032**	0.48	179800	10.3	36	132 ... 200	—	—	438700	466100	150000	393000
	317ML4	**1134**	0.44	156000	8.1	36	132 ... 200	—	—	442000	470000	150000	393000
	317ML4	**1318**	0.38	156000	7.0	36	132 ... 200	—	—	442000	470000	150000	393000
	317ML4	**1595**	0.31	156000	5.8	36	132 ... 200	—	—	442000	470000	150000	393000
	317ML4	**1893**	0.26	150300	4.7	36	132 ... 200	—	—	442000	470000	150000	393000

B

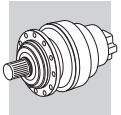

318M L

418

297550 Nm

n_1 min^{-1}		i	n_2 min^{-1}	M_{n2} Nm	P_{n1} kW	P_t kW	P (IEC)	Rn_2 [N] MC	MZ	HC/PC	HZ/PZ	FZ	$M_{2\,max}$ Nm
1500	**318ML3**	**76.5**	19.6	194800	200	40	200 ... 250	—	—	244300	275900	74200	500000
	318ML3	**98.2**	15.3	205100	200	40	200 ... 250	—	—	263300	297300	80600	500000
	318ML3	**117**	12.9	212500	200	40	200 ... 250	—	—	277200	313000	85300	500000
	318ML3	**123**	12.2	215000	200	40	200 ... 250	—	—	281900	318200	86900	500000
	318ML3	**146**	10.3	222700	200	40	200 ... 250	—	—	296700	335000	92000	500000
	318ML3	**170**	8.8	225300	200	40	200 ... 250	—	—	299000	337600	96800	500000
	318ML4	**262**	5.7	230200	115	22.0	180 ... 250	—	—	299000	337600	111800	500000
	318ML4	**313**	4.8	233400	115	22.0	180 ... 250	—	—	300800	339600	118600	500000
	318ML4	**337**	4.5	236300	115	22.0	180 ... 250	—	—	304000	343200	121500	500000
	318ML4	**402**	3.7	243400	108	22.0	180 ... 250	—	—	311700	352000	128900	500000
	318ML4	**422**	3.6	245500	103	22.0	180 ... 250	—	—	314000	354500	131100	500000
	318ML4	**477**	3.1	250600	93	22.0	180 ... 250	—	—	319400	360700	136500	500000
	318ML4	**515**	2.9	253900	87	22.0	180 ... 250	—	—	323000	364700	140100	500000
	318ML4	**612**	2.5	261300	76	22.0	180 ... 250	—	—	331000	373800	148300	500000
	318ML4	**647**	2.3	263400	72	22.0	180 ... 250	—	—	333700	376800	151100	500000
	318ML4	**726**	2.1	267800	65	22.0	180 ... 250	—	—	339200	383000	157000	500000
	318ML4	**768**	2.0	270000	62	22.0	180 ... 250	—	—	341900	386100	160000	500000
	318ML4	**911**	1.6	276800	54	22.0	180 ... 250	—	—	350400	395700	169400	500000
	318ML4	**1059**	1.4	261400	44	22.0	180 ... 250	—	—	358000	404300	178100	500000
1000	**318ML3**	**76.5**	13.1	211900	200	48	200 ... 250	—	—	275900	311500	84900	500000
	318ML3	**98.2**	10.2	223100	200	48	200 ... 250	—	—	297400	335700	92300	500000
	318ML3	**117**	8.6	225600	200	48	200 ... 250	—	—	299000	337600	97700	500000
	318ML3	**123**	8.1	226200	200	48	200 ... 250	—	—	299000	337600	99500	500000
	318ML3	**146**	6.8	228200	179	48	200 ... 250	—	—	299000	337600	105400	500000
	318ML3	**170**	5.9	229900	155	48	200 ... 250	—	—	299000	337600	110800	500000
	318ML4	**262**	3.8	242600	109	26.4	180 ... 250	—	—	310800	350900	128000	500000
	318ML4	**313**	3.2	249900	94	26.4	180 ... 250	—	—	318700	359900	135800	500000
	318ML4	**337**	3.0	253000	89	26.4	180 ... 250	—	—	322100	363700	139100	500000
	318ML4	**402**	2.5	260700	77	26.4	180 ... 250	—	—	330300	373000	147600	500000
	318ML4	**422**	2.4	262600	74	26.4	180 ... 250	—	—	332700	375700	150100	500000
	318ML4	**477**	2.1	267200	66	26.4	180 ... 250	—	—	338500	382200	156200	500000
	318ML4	**515**	1.9	270300	62	26.4	180 ... 250	—	—	342300	386500	160400	500000
	318ML4	**612**	1.6	277100	54	26.4	180 ... 250	—	—	350800	396100	169800	500000
	318ML4	**647**	1.5	279300	51	26.4	180 ... 250	—	—	353600	399200	173000	500000
	318ML4	**726**	1.4	284000	46	26.4	180 ... 250	—	—	359500	405900	179800	500000
	318ML4	**768**	1.3	286400	44	26.4	180 ... 250	—	—	362300	409100	183100	500000
	318ML4	**911**	1.1	293600	38	26.4	180 ... 250	—	—	371300	419300	193900	500000
	318ML4	**1059**	0.94	264700	29.6	26.4	180 ... 250	—	—	379400	428400	200000	500000
500	**318ML2**	**18.7**	26.7	182700	260	126	—	—	—	222600	251300	66900	500000
	318ML2	**23.5**	21.3	191500	260	126	—	—	—	238300	269100	72100	500000
	318ML2	**27.3**	18.3	197600	260	126	—	—	—	249300	281500	75900	500000
	318ML3	**76.5**	6.5	228700	171	80	200 ... 250	—	—	299000	337600	107000	500000
	318ML3	**98.2**	5.1	231500	135	80	200 ... 250	—	—	299000	337600	116200	500000
	318ML3	**117**	4.3	237800	117	80	200 ... 250	—	—	305600	345100	123100	500000
	318ML3	**123**	4.1	240000	112	80	200 ... 250	—	—	308000	347800	125400	500000
	318ML3	**146**	3.4	247100	97	80	200 ... 250	—	—	315700	356400	132800	500000
	318ML3	**170**	2.9	250200	84	80	200 ... 250	—	—	322500	364200	139600	500000
	318ML4	**262**	1.9	271000	61	44	180 ... 250	—	—	343200	387500	161300	500000
	318ML4	**313**	1.6	278000	53	44	180 ... 250	—	—	351900	397400	171100	500000
	318ML4	**337**	1.5	281000	49	44	180 ... 250	—	—	355600	401500	175300	500000
	318ML4	**402**	1.2	288200	42	44	180 ... 250	—	—	364700	411800	185900	500000
	318ML4	**422**	1.2	290400	41	44	180 ... 250	—	—	367300	414800	189100	500000
	318ML4	**477**	1.0	295500	37	44	180 ... 250	—	—	373700	422000	196800	500000
	318ML4	**515**	0.97	297600	34	44	180 ... 250	—	—	377900	426700	200000	500000
	318ML4	**612**	0.82	297600	28.8	44	180 ... 250	—	—	387300	437300	200000	500000
	318ML4	**647**	0.77	297600	27.2	44	180 ... 250	—	—	390400	440800	200000	500000
	318ML4	**726**	0.69	297600	24.2	44	180 ... 250	—	—	396900	448100	200000	500000
	318ML4	**768**	0.65	297600	22.9	44	180 ... 250	—	—	400100	451700	200000	500000
	318ML4	**911**	0.55	297600	19.3	44	180 ... 250	—	—	410000	462900	200000	500000
	318ML4	**1059**	0.47	264700	14.8	44	180 ... 250	—	—	418900	473000	200000	500000

B

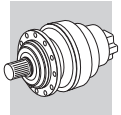

319 L	428	471190 Nm

n_1 min^{-1}		i	n_2 min^{-1}	M_{n2} Nm	P_{n1} kW	P_t kW	P (IEC)	Rn_2 [N] MC	MZ	HC/PC	HZ/PZ	FZ	$M_{2\,max}$ Nm
1500	**319L3**	**84.8**	17.7	213400	200	50	200 ... 250	—	—	306100	337000	76700	680000
	319L3	**100**	15.0	220900	200	50	200 ... 250	—	—	322000	354500	81200	680000
	319L3	**109**	13.8	230000	200	50	200 ... 250	—	—	329900	363200	83400	680000
	319L3	**126**	11.9	236500	200	50	200 ... 250	—	—	344700	379500	87600	680000
	319L3	**129**	11.6	242100	200	50	200 ... 250	—	—	347300	382400	88300	680000
	319L3	**137**	11.0	246200	200	50	200 ... 250	—	—	353200	388800	90000	680000
	319L3	**162**	9.3	251600	200	50	200 ... 250	—	—	363300	400000	95200	680000
	319L3	**188**	8.0	263000	200	50	200 ... 250	—	—	363300	400000	100100	680000
	319L3	**192**	7.8	257200	200	50	200 ... 250	—	—	363300	400000	100700	680000
	319L3	**223**	6.7	262200	200	50	200 ... 250	—	—	363300	400000	105900	680000
	319L4	**291**	5.2	308900	115	30	180 ... 250	—	—	363300	400000	115700	680000
	319L4	**347**	4.3	325700	115	30	180 ... 250	—	—	370900	408400	122700	680000
	319L4	**410**	3.7	287000	115	30	180 ... 250	—	—	379900	418300	129800	680000
	319L4	**445**	3.4	351000	115	30	180 ... 250	—	—	384300	423200	133400	680000
	319L4	**515**	2.9	298100	103	30	180 ... 250	—	—	392500	432100	140000	680000
	319L4	**528**	2.8	369500	115	30	180 ... 250	—	—	393900	433700	141200	680000
	319L4	**558**	2.7	375700	115	30	180 ... 250	—	—	397000	437100	143900	680000
	319L4	**571**	2.6	378200	115	30	180 ... 250	—	—	398300	438500	145000	680000
	319L4	**625**	2.4	307900	87	30	180 ... 250	—	—	403500	444200	149400	680000
	319L4	**678**	2.2	390100	102	30	180 ... 250	—	—	408200	449400	153500	680000
	319L4	**717**	2.1	399500	99	30	180 ... 250	—	—	411400	453000	156300	680000
	319L4	**802**	1.9	321000	71	30	180 ... 250	—	—	418100	460300	162300	680000
	319L4	**850**	1.8	403900	84	30	180 ... 250	—	—	421600	464200	165500	680000
	319L4	**912**	1.6	319400	62	30	180 ... 250	—	—	425800	468800	169400	680000
	319L4	**1007**	1.5	333400	59	30	180 ... 250	—	—	431900	475500	175100	680000
	319L4	**1195**	1.3	343000	51	30	180 ... 250	—	—	442600	487300	185400	680000
	319L4	**1389**	1.1	333700	43	30	180 ... 250	—	—	452200	497900	194900	680000
1000	**319L3**	**84.8**	11.8	241000	200	60	200 ... 250	—	—	345700	380600	87900	680000
	319L3	**100**	10.0	249300	200	60	200 ... 250	—	—	363300	400000	92900	680000
	319L3	**109**	9.2	259800	200	60	200 ... 250	—	—	363300	400000	95500	680000
	319L3	**126**	7.9	256700	200	60	200 ... 250	—	—	363300	400000	100200	680000
	319L3	**129**	7.7	273400	200	60	200 ... 250	—	—	363300	400000	101100	680000
	319L3	**137**	7.3	278100	200	60	200 ... 250	—	—	363300	400000	103000	680000
	319L3	**162**	6.2	265100	188	60	200 ... 250	—	—	363300	400000	108900	680000
	319L3	**188**	5.3	281200	171	60	200 ... 250	—	—	363300	400000	114600	680000
	319L3	**192**	5.2	271000	162	60	200 ... 250	—	—	363300	400000	115300	680000
	319L3	**223**	4.5	277400	143	60	200 ... 250	—	—	369000	406200	121300	680000
	319L4	**291**	3.4	348800	115	36	180 ... 250	—	—	383200	421900	132500	680000
	319L4	**347**	2.9	367800	115	36	180 ... 250	—	—	393000	432700	140500	680000
	319L4	**410**	2.4	307100	89	36	180 ... 250	—	—	402600	443200	148600	680000
	319L4	**445**	2.2	393200	105	36	180 ... 250	—	—	407300	448400	152700	680000
	319L4	**515**	1.9	319000	73	36	180 ... 250	—	—	415900	457900	160300	680000
	319L4	**528**	1.9	390600	87	36	180 ... 250	—	—	417400	459500	161700	680000
	319L4	**558**	1.8	413600	88	36	180 ... 250	—	—	420700	463200	164700	680000
	319L4	**571**	1.8	405900	84	36	180 ... 250	—	—	422000	464700	165900	680000
	319L4	**625**	1.6	329400	62	36	180 ... 250	—	—	427500	470700	171000	680000
	319L4	**678**	1.5	411400	72	36	180 ... 250	—	—	432500	476200	175700	680000
	319L4	**717**	1.4	437400	72	36	180 ... 250	—	—	436000	480000	179000	680000
	319L4	**802**	1.2	343400	51	36	180 ... 250	—	—	443000	487800	185800	680000
	319L4	**850**	1.2	428500	60	36	180 ... 250	—	—	446800	491900	189500	680000
	319L4	**912**	1.1	333200	43	36	180 ... 250	—	—	451200	496800	193900	680000
	319L4	**1007**	0.99	356300	42	36	180 ... 250	—	—	457600	503900	200000	680000
	319L4	**1195**	0.84	356300	35	36	180 ... 250	—	—	469000	516300	200000	680000
	319L4	**1389**	0.72	336400	28.7	36	180 ... 250	—	—	479200	527600	200000	680000
500	**319L2**	**20.7**	24.1	194500	260	140	—	—	—	278900	307100	69200	680000
	319L2	**24.5**	20.4	201300	260	140	—	—	—	293400	323000	73200	680000
	319L2	**26.0**	19.2	208200	260	140	—	—	—	298600	328700	74700	680000
	319L2	**30.8**	16.3	215500	260	140	—	—	—	314100	345800	79000	680000
	319L2	**35.8**	14.0	225400	260	140	—	—	—	328600	361800	83000	680000
	319L3	**84.8**	5.9	296700	200	100	200 ... 250	—	—	363300	400000	110700	680000

B

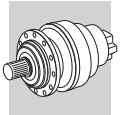

319 L — 428 — 471190 Nm

n_1 min^{-1}		i	n_2 min^{-1}	M_{n2} Nm	P_{n1} kW	P_t kW	P (IEC)	Rn_2 [N] MC	MZ	HC/PC	HZ/PZ	FZ	$M_{2\,max}$ Nm
500	**319L3**	**100**	5.0	272600	156	100	200 ... 250	—	—	363500	400200	117100	680000
	319L3	**109**	4.6	319800	169	100	200 ... 250	—	—	367700	404800	120300	680000
	319L3	**126**	4.0	283100	129	100	200 ... 250	—	—	375400	413400	126300	680000
	319L3	**129**	3.9	336700	150	100	200 ... 250	—	—	376800	414900	127400	680000
	319L3	**137**	3.7	342300	144	100	200 ... 250	—	—	379800	418200	129700	680000
	319L3	**162**	3.1	295100	105	100	200 ... 250	—	—	389100	428400	137200	680000
	319L3	**188**	2.7	284000	87	100	200 ... 250	—	—	397700	437900	144400	680000
	319L3	**192**	2.6	303700	91	100	200 ... 250	—	—	398700	439000	145300	680000
	319L3	**223**	2.2	309300	80	100	200 ... 250	—	—	407400	448500	152800	680000
	319L4	**291**	1.7	417300	85	60	180 ... 250	—	—	423100	465800	166900	680000
	319L4	**347**	1.4	434200	74	60	180 ... 250	—	—	433900	477800	177000	680000
	319L4	**410**	1.2	344700	50	60	180 ... 250	—	—	444500	489400	187300	680000
	319L4	**445**	1.1	459100	61	60	180 ... 250	—	—	449700	495100	192400	680000
	319L4	**515**	0.97	356300	41	60	180 ... 250	—	—	459100	505500	200000	680000
	319L4	**528**	0.95	406500	46	60	180 ... 250	—	—	460800	507300	200000	680000
	319L4	**558**	0.90	471200	50	60	180 ... 250	—	—	464500	511400	200000	680000
	319L4	**571**	0.88	443000	46	60	180 ... 250	—	—	466000	513000	200000	680000
	319L4	**625**	0.80	356300	34	60	180 ... 250	—	—	472000	519700	200000	680000
	319L4	**678**	0.74	433000	38	60	180 ... 250	—	—	477500	525800	200000	680000
	319L4	**717**	0.70	471200	39	60	180 ... 250	—	—	481300	530000	200000	680000
	319L4	**802**	0.62	356300	26.3	60	180 ... 250	—	—	489100	538600	200000	680000
	319L4	**850**	0.59	438800	31	60	180 ... 250	—	—	493300	543100	200000	680000
	319L4	**912**	0.55	336400	21.8	60	180 ... 250	—	—	498200	548500	200000	680000
	319L4	**1007**	0.50	356300	20.9	60	180 ... 250	—	—	505300	556300	200000	680000
	319L4	**1195**	0.42	356300	17.6	60	180 ... 250	—	—	517800	570100	200000	680000
	319L4	**1389**	0.36	336400	14.3	60	180 ... 250	—	—	529000	582500	200000	680000

321 L — 438 — 655740 Nm

n_1 min^{-1}		i	n_2 min^{-1}	M_{n2} Nm	P_{n1} kW	P_t kW	P (IEC)	Rn_2 [N] MC	MZ	HC/PC	HZ/PZ	FZ	$M_{2\,max}$ Nm
1500	**321L4**	**258**	5.8	401700	150	35	180 ... 250	—	—	513900	611700	707900	934000
	321L4	**308**	4.9	423600	150	35	180 ... 250	—	—	515900	614000	746400	934000
	321L4	**395**	3.8	456500	150	35	180 ... 250	—	—	534600	636300	804400	934000
	321L4	**469**	3.2	480500	150	35	180 ... 250	—	—	547800	652100	846800	934000
	321L4	**515**	2.9	494200	150	35	180 ... 250	—	—	555200	660900	871000	934000
	321L4	**612**	2.5	519900	150	35	180 ... 250	—	—	569000	677200	916900	934000
	321L4	**736**	2.0	545400	131	35	180 ... 250	—	—	584200	695400	969400	934000
	321L4	**796**	1.9	556600	124	35	180 ... 250	—	—	590800	703200	992400	934000
	321L4	**945**	1.6	581800	109	35	180 ... 250	—	—	605400	720700	1044700	934000
	321L4	**1122**	1.3	530200	84	35	180 ... 250	—	—	620400	738500	1099800	934000
1000	**321L3**	**75.3**	13.3	313500	250	72	—	—	—	472000	561800	552400	934000
	321L3	**98.2**	10.2	339400	250	72	—	—	—	511100	608300	598100	934000
	321L3	**118**	8.5	358800	250	72	—	—	—	513900	611700	632300	934000
	321L3	**126**	7.9	365800	250	72	—	—	—	513900	611700	644600	934000
	321L3	**152**	6.6	386700	250	72	—	—	—	513900	611700	681500	934000
	321L3	**180**	5.6	407100	250	72	—	—	—	513900	611700	717400	934000
	321L4	**258**	3.9	453700	150	42	180 ... 250	—	—	533000	634500	799500	934000
	321L4	**308**	3.2	478300	150	42	180 ... 250	—	—	546600	650700	843000	934000
	321L4	**395**	2.5	515500	150	42	180 ... 250	—	—	566500	674300	908500	934000
	321L4	**469**	2.1	539100	136	42	180 ... 250	—	—	580500	691000	956400	934000
	321L4	**515**	1.9	552400	127	42	180 ... 250	—	—	588300	700300	983600	934000
	321L4	**612**	1.6	577400	112	42	180 ... 250	—	—	602900	717600	1035500	934000
	321L4	**736**	1.4	605800	97	42	180 ... 250	—	—	619100	736900	1094700	934000
	321L4	**796**	1.3	618200	92	42	180 ... 250	—	—	626000	745200	1120700	934000
	321L4	**945**	1.1	646200	81	42	180 ... 250	—	—	641500	763600	1179800	934000
	321L4	**1122**	0.89	536400	57	42	180 ... 250	—	—	657400	782500	1200000	934000

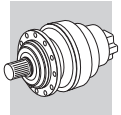

321 L — 438 — 655740 Nm

n_1 min^{-1}		i	n_2 min^{-1}	M_{n2} Nm	P_{n1} kW	P_t kW	P (IEC)	Rn_2 [N] MC	MZ	HC/PC	HZ/PZ	FZ	$M_{2\,max}$ Nm
500	**321L3**	**75.3**	6.6	385900	250	120	—	—	—	513900	611700	680100	934000
	321L3	**98.2**	5.1	417900	244	120	—	—	—	513900	611700	736400	934000
	321L3	**118**	4.2	441800	214	120	—	—	—	526300	626500	778500	934000
	321L3	**126**	4.0	450300	205	120	—	—	—	531200	632200	793600	934000
	321L3	**152**	3.3	476100	180	120	—	—	—	545400	649200	839000	934000
	321L3	**180**	2.8	501200	160	120	—	—	—	558900	665300	883200	934000
	321L4	**258**	1.9	552700	127	70	180 ... 250	—	—	588500	700500	984200	934000
	321L4	**308**	1.6	578500	111	70	180 ... 250	—	—	603500	718400	1037800	934000
	321L4	**395**	1.3	617100	92	70	180 ... 250	—	—	625400	744500	1118500	934000
	321L4	**469**	1.1	645100	81	70	180 ... 250	—	—	640900	762900	1177400	934000
	321L4	**515**	0.97	655700	75	70	180 ... 250	—	—	649600	773200	1200000	934000
	321L4	**612**	0.82	655700	63	70	180 ... 250	—	—	665700	792300	1200000	934000
	321L4	**736**	0.68	655700	53	70	180 ... 250	—	—	683500	813600	1200000	934000
	321L4	**796**	0.63	655700	49	70	180 ... 250	—	—	691200	822700	1200000	934000
	321L4	**945**	0.53	655700	41	70	180 ... 250	—	—	708300	843100	1200000	934000
	321L4	**1122**	0.45	536400	28.3	70	180 ... 250	—	—	725900	864000	1200000	934000

323 L — 448 — 890310 Nm

n_1 min^{-1}		i	n_2 min^{-1}	M_{n2} Nm	P_{n1} kW	P_t kW	P (IEC)	Rn_2 [N] MC	MZ	HC/PC	HZ/PZ	FZ	$M_{2\,max}$ Nm
1500	**323L4**	**341**	4.4	757500	200	50	200 ... 250	—	—	—	—	705300	1580000
	323L4	**390**	3.8	774100	200	50	200 ... 250	—	—	—	—	734300	1580000
	323L4	**438**	3.4	788700	200	50	200 ... 250	—	—	—	—	760100	1580000
	323L4	**500**	3.0	806000	200	50	200 ... 250	—	—	—	—	791300	1580000
	323L4	**569**	2.6	822800	200	50	200 ... 250	—	—	—	—	822300	1580000
	323L4	**628**	2.4	832800	200	50	200 ... 250	—	—	—	—	847100	1580000
	323L4	**703**	2.1	840100	200	50	200 ... 250	—	—	—	—	876200	1580000
	323L4	**758**	2.0	844900	198	50	200 ... 250	—	—	—	—	896200	1580000
	323L4	**882**	1.7	854800	172	50	200 ... 250	—	—	—	—	938000	1580000
	323L4	**1025**	1.5	864700	150	50	200 ... 250	—	—	—	—	981300	1580000
	323L4	**1101**	1.4	869400	140	50	200 ... 250	—	—	—	—	1002400	1580000
	323L4	**1279**	1.2	879500	122	50	200 ... 250	—	—	—	—	1048800	1580000
1000	**323L4**	**341**	2.9	808800	200	60	200 ... 250	—	—	—	—	796500	1580000
	323L4	**390**	2.6	826500	200	60	200 ... 250	—	—	—	—	829200	1580000
	323L4	**438**	2.3	835700	200	60	200 ... 250	—	—	—	—	858400	1580000
	323L4	**500**	2.0	844300	200	60	200 ... 250	—	—	—	—	893700	1580000
	323L4	**569**	1.8	852600	177	60	200 ... 250	—	—	—	—	928700	1580000
	323L4	**628**	1.6	859100	162	60	200 ... 250	—	—	—	—	956700	1580000
	323L4	**703**	1.4	866600	146	60	200 ... 250	—	—	—	—	989500	1580000
	323L4	**758**	1.3	871600	136	60	200 ... 250	—	—	—	—	1012100	1580000
	323L4	**882**	1.1	881800	118	60	200 ... 250	—	—	—	—	1059300	1580000
	323L4	**1025**	0.98	890300	103	60	200 ... 250	—	—	—	—	1100000	1580000
	323L4	**1101**	0.91	890300	96	60	200 ... 250	—	—	—	—	1100000	1580000
	323L4	**1279**	0.78	890300	82	60	200 ... 250	—	—	—	—	1100000	1580000
500	**323L3**	**83.3**	6.0	702600	260	180	—	—	—	—	—	642600	1580000
	323L3	**105**	4.8	747400	260	180	—	—	—	—	—	687900	1580000
	323L3	**113**	4.4	756600	260	180	—	—	—	—	—	703700	1580000
	323L3	**120**	4.2	763800	260	180	—	—	—	—	—	716200	1580000
	323L3	**142**	3.5	784900	260	180	—	—	—	—	—	753300	1580000
	323L3	**165**	3.0	804200	260	180	—	—	—	—	—	788100	1580000
	323L3	**205**	2.4	831600	232	180	—	—	—	—	—	842300	1580000
	323L4	**341**	1.5	864600	150	100	200 ... 250	—	—	—	—	980600	1580000
	323L4	**390**	1.3	873500	132	100	200 ... 250	—	—	—	—	1020900	1580000
	323L4	**438**	1.1	881300	119	100	200 ... 250	—	—	—	—	1056800	1580000
	323L4	**500**	1.0	890300	105	100	200 ... 250	—	—	—	—	1100000	1580000
	323L4	**569**	0.88	890300	93	100	200 ... 250	—	—	—	—	1100000	1580000
	323L4	**628**	0.80	890300	84	100	200 ... 250	—	—	—	—	1100000	1580000

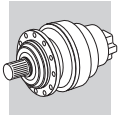

323 L — 448 — 890310 Nm

n_1 min^{-1}		i	n_2 min^{-1}	M_{n2} Nm	P_{n1} kW	P_t kW	P (IEC)	Rn_2 [N] MC	MZ	HC/PC	HZ/PZ	FZ	$M_{2\,max}$ Nm
500	**323L4**	**703**	0.71	890300	75	100	200 ... 250	—	—	—	—	1100000	1580000
	323L4	**758**	0.66	890300	70	100	200 ... 250	—	—	—	—	1100000	1580000
	323L4	**882**	0.57	890300	60	100	200 ... 250	—	—	—	—	1100000	1580000
	323L4	**1025**	0.49	890300	51	100	200 ... 250	—	—	—	—	1100000	1580000
	323L4	**1101**	0.45	890300	48	100	200 ... 250	—	—	—	—	1100000	1580000
	323L4	**1279**	0.39	890300	41	100	200 ... 250	—	—	—	—	1100000	1580000

325 L — 452 — 1286700 Nm

n_1 min^{-1}		i	n_2 min^{-1}	M_{n2} Nm	P_{n1} kW	P_t kW	P (IEC)	Rn_2 [N] MC	MZ	HC/PC	HZ/PZ	FZ	$M_{2\,max}$ Nm
1500	**325L4**	**341**	4.4	931900	200	65	200 ... 250	—	—	—	—	897700	2000000
	325L4	**390**	3.8	952300	200	65	200 ... 250	—	—	—	—	934500	2000000
	325L4	**438**	3.4	1004300	200	65	200 ... 250	—	—	—	—	967400	2000000
	325L4	**500**	3.0	1026300	200	65	200 ... 250	—	—	—	—	1007100	2000000
	325L4	**569**	2.6	1066500	200	65	200 ... 250	—	—	—	—	1046600	2000000
	325L4	**628**	2.4	1093000	200	65	200 ... 250	—	—	—	—	1078100	2000000
	325L4	**703**	2.1	1101500	200	65	200 ... 250	—	—	—	—	1115200	2000000
	325L4	**758**	2.0	1147900	200	65	200 ... 250	—	—	—	—	1140600	2000000
	325L4	**882**	1.7	1154000	200	65	200 ... 250	—	—	—	—	1193800	2000000
	325L4	**1025**	1.5	1190200	200	65	200 ... 250	—	—	—	—	1248900	2000000
	325L4	**1101**	1.4	963200	155	65	200 ... 250	—	—	—	—	1275800	2000000
	325L4	**1279**	1.2	963200	134	65	200 ... 250	—	—	—	—	1334800	2000000
1000	**325L4**	**341**	2.9	1052400	200	78	200 ... 250	—	—	—	—	1013800	2000000
	325L4	**390**	2.6	1075400	200	78	200 ... 250	—	—	—	—	1055400	2000000
	325L4	**438**	2.3	1120700	200	78	200 ... 250	—	—	—	—	1092500	2000000
	325L4	**500**	2.0	1130200	200	78	200 ... 250	—	—	—	—	1137400	2000000
	325L4	**569**	1.8	1157600	200	78	200 ... 250	—	—	—	—	1182000	2000000
	325L4	**628**	1.6	1179300	200	78	200 ... 250	—	—	—	—	1217600	2000000
	325L4	**703**	1.4	1197000	200	78	200 ... 250	—	—	—	—	1259400	2000000
	325L4	**758**	1.3	1228300	192	78	200 ... 250	—	—	—	—	1288100	2000000
	325L4	**882**	1.1	1254000	168	78	200 ... 250	—	—	—	—	1348200	2000000
	325L4	**1025**	0.98	1286700	148	78	200 ... 250	—	—	—	—	1400000	2000000
	325L4	**1101**	0.91	963200	104	78	200 ... 250	—	—	—	—	1400000	2000000
	325L4	**1279**	0.78	963200	89	78	200 ... 250	—	—	—	—	1400000	2000000
500	**325L3**	**83.3**	6.0	849100	260	230	—	—	—	—	—	817900	2000000
	325L3	**105**	4.8	908900	260	230	—	—	—	—	—	875600	2000000
	325L3	**113**	4.4	898100	260	230	—	—	—	—	—	895600	2000000
	325L3	**120**	4.2	928800	260	230	—	—	—	—	—	911500	2000000
	325L3	**142**	3.5	961400	260	230	—	—	—	—	—	958700	2000000
	325L3	**165**	3.0	1005800	260	230	—	—	—	—	—	1003000	2000000
	325L3	**205**	2.4	963200	260	230	—	—	—	—	—	1072000	2000000
	325L4	**341**	1.5	1206900	200	130	200 ... 250	—	—	—	—	1248100	2000000
	325L4	**390**	1.3	1228100	186	130	200 ... 250	—	—	—	—	1299300	2000000
	325L4	**438**	1.1	1258300	170	130	200 ... 250	—	—	—	—	1345100	2000000
	325L4	**500**	1.0	1286700	152	130	200 ... 250	—	—	—	—	1400000	2000000
	325L4	**569**	0.88	1286700	134	130	200 ... 250	—	—	—	—	1400000	2000000
	325L4	**628**	0.80	1286700	121	130	200 ... 250	—	—	—	—	1400000	2000000
	325L4	**703**	0.71	1286700	108	130	200 ... 250	—	—	—	—	1400000	2000000
	325L4	**758**	0.66	1286600	100	130	200 ... 250	—	—	—	—	1400000	2000000
	325L4	**882**	0.57	1286700	86	130	200 ... 250	—	—	—	—	1400000	2000000
	325L4	**1025**	0.49	1286700	74	130	200 ... 250	—	—	—	—	1400000	2000000
	325L4	**1101**	0.45	963200	52	130	200 ... 250	—	—	—	—	1400000	2000000
	325L4	**1279**	0.39	963200	45	130	200 ... 250	—	—	—	—	1400000	2000000

25.4 DATI TECNICI RIDUTTORI ANGOLARI 300M R

Guida alla consultazione delle tabelle.

314M R	376	80640 Nm

n_1 min^{-1}		i	n_2 min^{-1}	M_{n2} Nm	P_{n1} kW	P_t kW	P (IEC)	Rn_2 [N] MC	MZ	HC/PC	HZ/PZ	FZ	$M_{2\,max}$ Nm
1500	**314MR3B**	51.1	**29.4**	39100	130	55	180 ... 250	—	—	95500	114600	29200	115000
	314MR3B	65.5	**22.9**	50200	130	55	180 ... 250	—	—	103000	123500	31700	115000
	314MR3B	77.8	**19.3**	52500	116	55	180 ... 250	—	—	108400	130000	33600	115000
	314MR3B	82.3	**18.2**	54400	114	55	180 ... 250	—	—	110200	132200	34200	115000
	314MR3B	97.6	**15.4**	57300	101	55	180 ... 250	—	—	116000	139200	36200	115000

Valore di coppia nominale del riduttore indipendente dalla potenza meccanica installata

1	Coppia di riferimento
2	Velocità di comando riduttore
3	Grandezza riduttore in esecuzione angolare. NOTA: i suffissi (B) (C) sulla stessa grandezza indicano riduzioni angolari di dimensioni differenti: vedere le pagine dimensionali
4	Rapporto di riduzione
5	Velocità angolare all'albero lento
6	Coppia nominale all'albero lento del riduttore, basata su: - fattore di servizio f_S=1 - durata teorica di 10000 h
7	Potenza nominale applicabile al riduttore, per: - fattore di servizio f_S=1 - durata teorica di 10000 h
8	Potenza termica riduttore
9	Grandezza motore elettrico IEC installabile
10	Carico radiale applicabile all'albero lento, calcolato per: - fattore di servizio f_S=1 - durata teorica di 10000 h - velocità uscita n_2 Per forze non applicate in mezzeria riferirsi ai diagrammi riportati a seguito delle pagine dimensionali del riduttore in oggetto
11	Coppia massima
12	Pagina delle dimensioni

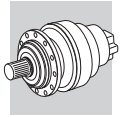

300 R

248

1250 Nm

n_1 min-1		i	n_2 min-1	M_{n2} Nm	P_{n1} kW	Pt kW	P (IEC)	Rn_2 [N] MC/PC	MZ/PZ	HC	HZ	FZ	$M_{2\,max}$ Nm
1500	**300R2**	**7.13**	210	580	13.7	12.0	71 ... 132	2360	2360	8620	10000	1350	2000
	300R2	**8.74**	172	610	11.7	12.0	71 ... 132	2520	2520	9160	10700	1440	2400
	300R2	**11.8**	127	590	8.3	12.0	71 ... 132	2790	2790	10000	11700	1590	2400
	300R2	**14.8**	102	510	5.7	12.0	71 ... 132	3000	3000	10700	12500	1710	2400
	300R2	**18.5**	81	370	3.3	12.0	71 ... 132	3230	3230	11500	13300	1850	2400
	300R3	**24.8**	60	730	5.1	12.0	71 ... 132	3570	3570	12500	14600	2040	2000
	300R3	**30.4**	49	840	4.8	12.0	71 ... 132	3820	3820	13300	15500	2180	2400
	300R3	**37.3**	40	840	3.9	12.0	71 ... 132	4090	4090	14200	16500	2330	2400
	300R3	**41.2**	36	650	2.7	12.0	71 ... 132	4220	4220	14600	17000	2410	2400
	300R3	**50.4**	29.8	850	2.9	12.0	71 ... 132	4520	4520	15500	18000	2580	2400
	300R3	**62.9**	23.8	850	2.3	12.0	71 ... 132	4870	4870	16600	19300	2780	2400
	300R3	**68.2**	22.0	650	1.6	12.0	71 ... 132	5000	5000	17000	19700	2860	2400
	300R3	**78.7**	19.1	850	1.9	12.0	71 ... 132	5240	5240	17700	20600	2990	2400
	300R3	**85.2**	17.6	650	1.3	12.0	71 ... 132	5380	5380	18100	21100	3070	2400
	300R3	**106**	14.1	650	1.1	12.0	71 ... 132	5800	5800	19400	22600	3310	2400
	300R3	**133**	11.3	550	0.71	12.0	71 ... 132	6240	6240	20700	24100	3570	2400
	300R4	**106**	14.2	860	1.4	10.0	71 ... 132	5790	5790	19400	22500	3310	2400
	300R4	**130**	11.6	860	1.2	10.0	71 ... 132	6190	6190	20600	23900	3540	2400
	300R4	**143**	10.5	650	0.81	10.0	71 ... 132	6400	6400	21200	24700	3660	2400
	300R4	**159**	9.4	870	0.97	10.0	71 ... 132	6500	6500	21500	25000	3780	2400
	300R4	**175**	8.5	880	0.89	10.0	71 ... 132	6500	6500	21500	25000	3910	2400
	300R4	**215**	7.0	910	0.75	10.0	71 ... 132	6500	6500	21500	25000	4190	2400
	300R4	**237**	6.3	650	0.49	10.0	71 ... 132	6500	6500	21500	25000	4330	2400
	300R4	**268**	5.6	930	0.62	10.0	71 ... 132	6500	6500	21500	25000	4510	2400
	300R4	**291**	5.2	950	0.58	10.0	71 ... 132	6500	6500	21500	25000	4630	2400
	300R4	**363**	4.1	980	0.48	10.0	71 ... 132	6680	6680	22100	25700	4990	2400
	300R4	**394**	3.8	680	0.31	10.0	71 ... 132	6760	6760	22400	26000	5120	2400
	300R4	**453**	3.3	1020	0.40	10.0	71 ... 132	6890	6890	22800	26500	5370	2400
	300R4	**491**	3.1	710	0.25	10.0	71 ... 132	6970	6970	23100	26800	5510	2400
	300R4	**613**	2.4	730	0.21	10.0	71 ... 132	7200	7200	23800	27700	5940	2400
	300R4	**766**	2.0	760	0.18	10.0	71 ... 132	7430	7430	24600	28600	6400	2400
1000	**300R2**	**7.13**	140	660	10.3	14.4	71 ... 132	2700	2700	9740	11300	1540	2000
	300R2	**8.74**	114	690	8.8	14.4	71 ... 132	2880	2880	10300	12000	1650	2400
	300R2	**11.8**	85	630	6.0	14.4	71 ... 132	3190	3190	11300	13200	1820	2400
	300R2	**14.8**	68	530	4.0	14.4	71 ... 132	3440	3440	12100	14100	1960	2400
	300R2	**18.5**	54	370	2.2	14.4	71 ... 132	3700	3700	12900	15100	2110	2400
	300R3	**24.8**	40	730	3.4	14.4	71 ... 132	4090	4090	14200	16500	2330	2000
	300R3	**30.4**	33	850	3.2	14.4	71 ... 132	4370	4370	15000	17500	2500	2400
	300R3	**37.3**	26.8	850	2.6	14.4	71 ... 132	4680	4680	16000	18600	2670	2400
	300R3	**41.2**	24.3	650	1.8	14.4	71 ... 132	4840	4840	16500	19200	2760	2400
	300R3	**50.4**	19.8	850	1.9	14.4	71 ... 132	5170	5170	17500	20400	2960	2400
	300R3	**62.9**	15.9	850	1.6	14.4	71 ... 132	5570	5570	18700	21800	3180	2400
	300R3	**68.2**	14.7	650	1.1	14.4	71 ... 132	5720	5720	19200	22300	3270	2400
	300R3	**78.7**	12.7	860	1.3	14.4	71 ... 132	6000	6000	20000	23300	3430	2400
	300R3	**85.2**	11.7	650	0.88	14.4	71 ... 132	6160	6160	20500	23800	3520	2400
	300R3	**106**	9.4	650	0.70	14.4	71 ... 132	6500	6500	21500	25000	3790	2400
	300R3	**133**	7.5	550	0.48	14.4	71 ... 132	6500	6500	21500	25000	4080	2400
	300R4	**106**	9.4	870	0.97	12.0	71 ... 132	6500	6500	21500	25000	3780	2400
	300R4	**130**	7.7	890	0.81	12.0	71 ... 132	6500	6500	21500	25000	4050	2400
	300R4	**143**	7.0	650	0.54	12.0	71 ... 132	6500	6500	21500	25000	4190	2400
	300R4	**159**	6.3	920	0.68	12.0	71 ... 132	6500	6500	21500	25000	4330	2400
	300R4	**175**	5.7	930	0.63	12.0	71 ... 132	6500	6500	21500	25000	4480	2400
	300R4	**215**	4.7	960	0.53	12.0	71 ... 132	6570	6570	21700	25300	4790	2400
	300R4	**237**	4.2	670	0.33	12.0	71 ... 132	6660	6660	22000	25600	4950	2400
	300R4	**268**	3.7	1000	0.44	12.0	71 ... 132	6780	6780	22400	26100	5160	2400
	300R4	**291**	3.4	1010	0.41	12.0	71 ... 132	6860	6860	22700	26400	5300	2400
	300R4	**363**	2.8	1050	0.34	12.0	71 ... 132	7080	7080	23400	27200	5710	2400
	300R4	**394**	2.5	730	0.22	12.0	71 ... 132	7160	7160	23700	27500	5860	2400
	300R4	**453**	2.2	1090	0.29	12.0	71 ... 132	7310	7310	24200	28100	6140	2400
	300R4	**491**	2.0	760	0.18	12.0	71 ... 132	7390	7390	24400	28400	6310	2400
	300R4	**613**	1.6	790	0.15	12.0	71 ... 132	7630	7630	25200	29300	6800	2400
	300R4	**766**	1.3	820	0.13	12.0	71 ... 132	7880	7880	26000	30300	7320	2400

B

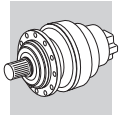

300 R — 248 — 1250 Nm

n_1 min^{-1}		i	n_2 min^{-1}	M_{n2} Nm	P_{n1} kW	Pt kW	P (IEC)	Rn_2 [N] MC/PC	MZ/PZ	HC	HZ	FZ	$M_{2\,max}$ Nm
500	**300R2**	**7.13**	70	730	5.7	24.0	71 ... 132	3400	3400	12000	13900	1940	2000
	300R2	**8.74**	57	820	5.2	24.0	71 ... 132	3630	3630	12700	14800	2080	2400
	300R2	**11.8**	42	650	3.1	24.0	71 ... 132	4020	4020	14000	16200	2300	2400
	300R2	**14.8**	34	550	2.1	24.0	71 ... 132	4330	4330	14900	17300	2470	2400
	300R2	**18.5**	27.1	370	1.1	24.0	71 ... 132	4660	4660	15900	18500	2660	2400
	300R3	**24.8**	20.1	730	1.7	24.0	71 ... 132	5150	5150	17400	20300	2940	2000
	300R3	**30.4**	16.4	850	1.6	24.0	71 ... 132	5510	5510	18500	21500	3150	2400
	300R3	**37.3**	13.4	860	1.3	24.0	71 ... 132	5890	5890	19700	22900	3370	2400
	300R3	**41.2**	12.1	650	0.91	24.0	71 ... 132	6090	6090	20300	23600	3480	2400
	300R3	**50.4**	9.9	860	0.98	24.0	71 ... 132	6500	6500	21500	25000	3720	2400
	300R3	**62.9**	7.9	890	0.81	24.0	71 ... 132	6500	6500	21500	25000	4010	2400
	300R3	**68.2**	7.3	650	0.55	24.0	71 ... 132	6500	6500	21500	25000	4120	2400
	300R3	**78.7**	6.4	920	0.67	24.0	71 ... 132	6500	6500	21500	25000	4320	2400
	300R3	**85.2**	5.9	650	0.44	24.0	71 ... 132	6500	6500	21500	25000	4430	2400
	300R3	**106**	4.7	660	0.35	24.0	71 ... 132	6560	6560	21700	25200	4780	2400
	300R3	**133**	3.8	570	0.25	24.0	71 ... 132	6770	6770	22400	26000	5140	2400
	300R4	**106**	4.7	960	0.54	20.0	71 ... 132	6550	6550	21700	25200	4770	2400
	300R4	**130**	3.9	990	0.45	20.0	71 ... 132	6750	6750	22300	25900	5100	2400
	300R4	**143**	3.5	690	0.29	20.0	71 ... 132	6840	6840	22600	26300	5270	2400
	300R4	**159**	3.1	1030	0.38	20.0	71 ... 132	6940	6940	23000	26700	5460	2400
	300R4	**175**	2.8	1050	0.35	20.0	71 ... 132	7040	7040	23300	27100	5640	2400
	300R4	**215**	2.3	1080	0.30	20.0	71 ... 132	7250	7250	24000	27900	6040	2400
	300R4	**237**	2.1	750	0.19	20.0	71 ... 132	7350	7350	24300	28300	6240	2400
	300R4	**268**	1.9	1120	0.25	20.0	71 ... 132	7480	7480	24800	28800	6500	2400
	300R4	**291**	1.7	1140	0.23	20.0	71 ... 132	7570	7570	25000	29100	6680	2400
	300R4	**363**	1.4	1180	0.19	20.0	71 ... 132	7810	7810	25800	30100	7190	2400
	300R4	**394**	1.3	820	0.12	20.0	71 ... 132	7910	7910	26100	30400	7390	2400
	300R4	**453**	1.1	1230	0.16	20.0	71 ... 132	8070	8070	26700	31000	7740	2400
	300R4	**491**	1.0	860	0.10	20.0	71 ... 132	8160	8160	27000	31400	7950	2400
	300R4	**613**	0.82	860	0.08	20.0	71 ... 132	8420	8420	27900	32400	8000	2400
	300R4	**766**	0.65	860	0.07	20.0	71 ... 132	8690	8690	28800	33400	8000	2400

301 R — 258 — 2060 Nm

n_1 min^{-1}		i	n_2 min^{-1}	M_{n2} Nm	P_{n1} kW	Pt kW	P (IEC)	Rn_2 [N] MC	MZ	HC/PC	HZ/PZ	FZ	$M_{2\,max}$ Nm
1500	**301R2**	**7.13**	210	1040	15.0	12.0	71 ... 132	2360	2360	8620	9420	1350	3400
	301R2	**8.74**	172	1090	15.0	12.0	71 ... 132	2520	2520	9160	10000	1440	3400
	301R2	**11.8**	127	1150	15.0	12.0	71 ... 132	2790	2790	10000	11000	1590	3400
	301R2	**14.8**	102	940	10.6	12.0	71 ... 132	3000	3000	10700	11700	1710	3400
	301R2	**18.5**	81	740	6.7	12.0	71 ... 132	3230	3230	11500	12500	1850	3400
	301R3	**24.8**	60	1390	9.7	12.0	71 ... 132	3570	3570	12500	13700	2040	3400
	301R3	**30.4**	49	1580	8.9	12.0	71 ... 132	3820	3820	13300	14600	2180	3400
	301R3	**37.3**	40	1600	7.4	12.0	71 ... 132	4090	4090	14200	15500	2330	3400
	301R3	**41.2**	36	1300	5.4	12.0	71 ... 132	4220	4220	14600	15900	2410	3400
	301R3	**50.4**	29.8	1630	5.6	12.0	71 ... 132	4520	4520	15500	16900	2580	3400
	301R3	**62.9**	23.8	1650	4.5	12.0	71 ... 132	4870	4870	16600	18100	2780	3400
	301R3	**68.2**	22.0	1300	3.3	12.0	71 ... 132	5000	5000	17000	18600	2860	3400
	301R3	**78.7**	19.1	1570	3.4	12.0	71 ... 132	5240	5240	17700	19400	2990	3400
	301R3	**85.2**	17.6	1300	2.6	12.0	71 ... 132	5380	5380	18100	19800	3070	3400
	301R3	**106**	14.1	1300	2.1	12.0	71 ... 132	5800	5800	19400	21200	3310	3400
	301R3	**133**	11.3	1150	1.5	12.0	71 ... 132	6240	6240	20700	22700	3570	3400
	301R4	**106**	14.2	1700	2.8	10.0	71 ... 132	5790	5790	19400	21200	3310	3400
	301R4	**130**	11.6	1720	2.3	10.0	71 ... 132	6190	6190	20600	22500	3540	3400
	301R4	**143**	10.5	1300	1.6	10.0	71 ... 132	6400	6400	21200	23200	3660	3400
	301R4	**159**	9.4	1740	1.9	10.0	71 ... 132	6500	6500	21500	23500	3780	3400

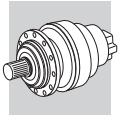

301 R

258

2060 Nm

n_1 min-1		i	n_2 min-1	M_{n2} Nm	P_{n1} kW	Pt kW	P (IEC)	Rn_2 [N] MC	MZ	HC/PC	HZ/PZ	FZ	$M_{2\,max}$ Nm
1500	**301R4**	**175**	8.5	1770	1.8	10.0	71 ... 132	6500	6500	21500	23500	3910	3400
	301R4	**215**	7.0	1820	1.5	10.0	71 ... 132	6500	6500	21500	23500	4190	3400
	301R4	**237**	6.3	1300	0.97	10.0	71 ... 132	6500	6500	21500	23500	4330	3400
	301R4	**268**	5.6	1870	1.2	10.0	71 ... 132	6500	6500	21500	23500	4510	3400
	301R4	**291**	5.2	1890	1.2	10.0	71 ... 132	6500	6500	21500	23500	4630	3400
	301R4	**363**	4.1	1960	0.96	10.0	71 ... 132	6680	6680	22100	24100	4990	3400
	301R4	**394**	3.8	1360	0.61	10.0	71 ... 132	6760	6760	22400	24400	5120	3400
	301R4	**453**	3.3	1930	0.76	10.0	71 ... 132	6890	6890	22800	24900	5370	3400
	301R4	**491**	3.1	1410	0.51	10.0	71 ... 132	6970	6970	23100	25200	5510	3400
	301R4	**613**	2.4	1470	0.42	10.0	71 ... 132	7200	7200	23800	26000	5940	3400
	301R4	**766**	2.0	1530	0.35	10.0	71 ... 132	7430	7430	24600	26900	6400	3400
1000	**301R2**	**7.13**	140	1170	15.0	14.4	71 ... 132	2700	2700	9740	10600	1540	3400
	301R2	**8.74**	114	1230	15.0	14.4	71 ... 132	2880	2880	10300	11300	1650	3400
	301R2	**11.8**	85	1250	11.8	14.4	71 ... 132	3190	3190	11300	12400	1820	3400
	301R2	**14.8**	68	1050	7.9	14.4	71 ... 132	3440	3440	12100	13200	1960	3400
	301R2	**18.5**	54	740	4.5	14.4	71 ... 132	3700	3700	12900	14200	2110	3400
	301R3	**24.8**	40	1430	6.6	14.4	71 ... 132	4090	4090	14200	15500	2330	3400
	301R3	**30.4**	33	1620	6.1	14.4	71 ... 132	4370	4370	15000	16400	2500	3400
	301R3	**37.3**	26.8	1640	5.0	14.4	71 ... 132	4680	4680	16000	17500	2670	3400
	301R3	**41.2**	24.3	1300	3.6	14.4	71 ... 132	4840	4840	16500	18000	2760	3400
	301R3	**50.4**	19.8	1660	3.8	14.4	71 ... 132	5170	5170	17500	19100	2960	3400
	301R3	**62.9**	15.9	1690	3.1	14.4	71 ... 132	5570	5570	18700	20500	3180	3400
	301R3	**68.2**	14.7	1300	2.2	14.4	71 ... 132	5720	5720	19200	21000	3270	3400
	301R3	**78.7**	12.7	1590	2.3	14.4	71 ... 132	6000	6000	20000	21900	3430	3400
	301R3	**85.2**	11.7	1300	1.8	14.4	71 ... 132	6160	6160	20500	22400	3520	3400
	301R3	**106**	9.4	1300	1.4	14.4	71 ... 132	6500	6500	21500	23500	3790	3400
	301R3	**133**	7.5	1150	0.99	14.4	71 ... 132	6500	6500	21500	23500	4080	3400
	301R4	**106**	9.4	1740	1.9	12.0	71 ... 132	6500	6500	21500	23500	3780	3400
	301R4	**130**	7.7	1790	1.6	12.0	71 ... 132	6500	6500	21500	23500	4050	3400
	301R4	**143**	7.0	1300	1.1	12.0	71 ... 132	6500	6500	21500	23500	4190	3400
	301R4	**159**	6.3	1840	1.4	12.0	71 ... 132	6500	6500	21500	23500	4330	3400
	301R4	**175**	5.7	1870	1.3	12.0	71 ... 132	6500	6500	21500	23500	4480	3400
	301R4	**215**	4.7	1920	1.1	12.0	71 ... 132	6570	6570	21700	23700	4790	3400
	301R4	**237**	4.2	1340	0.67	12.0	71 ... 132	6660	6660	22000	24100	4950	3400
	301R4	**268**	3.7	2000	0.88	12.0	71 ... 132	6780	6780	22400	24500	5160	3400
	301R4	**291**	3.4	2030	0.82	12.0	71 ... 132	6860	6860	22700	24800	5300	3400
	301R4	**363**	2.8	2100	0.69	12.0	71 ... 132	7080	7080	23400	25600	5710	3400
	301R4	**394**	2.5	1460	0.44	12.0	71 ... 132	7160	7160	23700	25900	5860	3400
	301R4	**453**	2.2	2000	0.52	12.0	71 ... 132	7310	7310	24200	26400	6140	3400
	301R4	**491**	2.0	1510	0.36	12.0	71 ... 132	7390	7390	24400	26700	6310	3400
	301R4	**613**	1.6	1580	0.30	12.0	71 ... 132	7630	7630	25200	27600	6800	3400
	301R4	**766**	1.3	1640	0.25	12.0	71 ... 132	7880	7880	26000	28500	7320	3400
500	**301R2**	**7.13**	70	1370	10.6	24.0	71 ... 132	3400	3400	12000	13100	1940	3400
	301R2	**8.74**	57	1520	9.7	24.0	71 ... 132	3630	3630	12700	13900	2080	3400
	301R2	**11.8**	42	1300	6.1	24.0	71 ... 132	4020	4020	14000	15200	2300	3400
	301R2	**14.8**	34	1150	4.3	24.0	71 ... 132	4330	4330	14900	16300	2470	3400
	301R2	**18.5**	27.1	740	2.2	24.0	71 ... 132	4660	4660	15900	17400	2660	3400
	301R3	**24.8**	20.1	1430	3.3	24.0	71 ... 132	5150	5150	17400	19000	2940	3400
	301R3	**30.4**	16.4	1680	3.2	24.0	71 ... 132	5510	5510	18500	20200	3150	3400
	301R3	**37.3**	13.4	1700	2.6	24.0	71 ... 132	5890	5890	19700	21500	3370	3400
	301R3	**41.2**	12.1	1300	1.8	24.0	71 ... 132	6090	6090	20300	22200	3480	3400
	301R3	**50.4**	9.9	1730	2.0	24.0	71 ... 132	6500	6500	21500	23500	3720	3400
	301R3	**62.9**	7.9	1760	1.6	24.0	71 ... 132	6500	6500	21500	23500	4010	3400
	301R3	**68.2**	7.3	1300	1.1	24.0	71 ... 132	6500	6500	21500	23500	4120	3400
	301R3	**78.7**	6.4	1600	1.2	24.0	71 ... 132	6500	6500	21500	23500	4320	3400
	301R3	**85.2**	5.9	1300	0.88	24.0	71 ... 132	6500	6500	21500	23500	4430	3400
	301R3	**106**	4.7	1310	0.71	24.0	71 ... 132	6560	6560	21700	23700	4780	3400
	301R3	**133**	3.8	1150	0.50	24.0	71 ... 132	6770	6770	22400	24500	5140	3400
	301R4	**106**	4.7	1920	1.1	20.0	71 ... 132	6550	6550	21700	23700	4770	3400

B

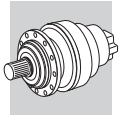

301 R — 258 — 2060 Nm

n_1 min^{-1}		i	n_2 min^{-1}	M_{n2} Nm	P_{n1} kW	Pt kW	P (IEC)	Rn_2 [N] MC	MZ	HC/PC	HZ/PZ	FZ	$M_{2\,max}$ Nm
500	**301R4**	**130**	3.9	1990	0.91	20.0	71 ... 132	6750	6750	22300	24400	5100	3400
	301R4	**143**	3.5	1380	0.57	20.0	71 ... 132	6840	6840	22600	24700	5270	3400
	301R4	**159**	3.1	2060	0.77	20.0	71 ... 132	6940	6940	23000	25100	5460	3400
	301R4	**175**	2.8	2090	0.71	20.0	71 ... 132	7040	7040	23300	25500	5640	3400
	301R4	**215**	2.3	2160	0.60	20.0	71 ... 132	7250	7250	24000	26200	6040	3400
	301R4	**237**	2.1	1510	0.37	20.0	71 ... 132	7350	7350	24300	26600	6240	3400
	301R4	**268**	1.9	2240	0.49	20.0	71 ... 132	7480	7480	24800	27100	6500	3400
	301R4	**291**	1.7	2270	0.46	20.0	71 ... 132	7570	7570	25000	27400	6680	3400
	301R4	**363**	1.4	2340	0.38	20.0	71 ... 132	7810	7810	25800	28300	7190	3400
	301R4	**394**	1.3	1650	0.25	20.0	71 ... 132	7910	7910	26100	28600	7390	3400
	301R4	**453**	1.1	2000	0.26	20.0	71 ... 132	8070	8070	26700	29200	7740	3400
	301R4	**491**	1.0	1710	0.21	20.0	71 ... 132	8160	8160	27000	29500	7950	3400
	301R4	**613**	0.82	1720	0.17	20.0	71 ... 132	8420	8420	27900	30400	8000	3400
	301R4	**766**	0.65	1720	0.13	20.0	71 ... 132	8690	8690	28800	31400	8000	3400

B

303 R — 268 — 2970 Nm

n_1 min^{-1}		i	n_2 min^{-1}	M_{n2} Nm	P_{n1} kW	Pt kW	P (IEC)	Rn_2 [N] MC	MZ	HC/PC	HZ/PZ	FZ	$M_{2\,max}$ Nm
1500	**303R2**	**9.23**	163	1680	30	18.0	71 ... 132	8290	9470	17500	20800	4400	5200
	303R2	**10.9**	138	1900	29.1	18.0	71 ... 132	8760	10000	18400	21900	4650	5200
	303R2	**13.7**	110	1970	24.1	18.0	71 ... 132	9450	10800	19700	23400	5010	5200
	303R2	**15.9**	94	1820	19.1	18.0	71 ... 132	9940	11400	20700	24500	5270	5200
	303R2	**19.2**	78	1550	13.5	18.0	71 ... 132	10600	12100	21900	25900	5620	5200
	303R2	**24.8**	61	860	5.8	18.0	71 ... 132	11500	13200	23600	28000	6110	5200
	303R3	**25.7**	58	2030	13.6	14.0	71 ... 132	11700	13300	23900	28300	6190	5200
	303R3	**31.5**	48	2110	11.5	14.0	71 ... 132	12500	14300	25300	30000	6620	5200
	303R3	**37.1**	40	2390	11.1	14.0	71 ... 132	13200	15100	26600	31600	7000	5200
	303R3	**42.6**	35	2070	8.4	14.0	71 ... 132	13800	15800	27800	32900	7320	5200
	303R3	**46.6**	32	2160	8.0	14.0	71 ... 132	14200	16300	28500	33800	7550	5200
	303R3	**50.3**	29.8	2380	8.2	14.0	71 ... 132	14600	16700	29200	34600	7740	5200
	303R3	**54.2**	27.7	1820	5.8	14.0	71 ... 132	15000	17100	29800	35400	7930	5200
	303R3	**63.1**	23.8	2170	5.9	14.0	71 ... 132	15700	18000	31200	37000	8350	5200
	303R3	**73.3**	20.5	1820	4.3	14.0	71 ... 132	16500	18900	32700	38700	8780	5200
	303R3	**78.7**	19.1	2180	4.8	14.0	71 ... 132	16900	19400	33400	39600	8990	5200
	303R3	**91.5**	16.4	1820	3.4	14.0	71 ... 132	17800	20400	34900	41400	9450	5200
	303R3	**114**	13.1	1820	2.7	14.0	71 ... 132	19200	21900	37300	44300	10200	5200
	303R4	**129**	11.6	2620	3.6	12.0	71 ... 132	20000	22800	38700	45900	10600	5200
	303R4	**148**	10.1	2310	2.8	12.0	71 ... 132	20900	23900	40400	47800	11100	5200
	303R4	**158**	9.5	2660	3.0	12.0	71 ... 132	21000	24000	40500	48000	11300	5200
	303R4	**185**	8.1	2310	2.2	12.0	71 ... 132	21000	24000	40500	48000	11900	5200
	303R4	**214**	7.0	2730	2.3	12.0	71 ... 132	21000	24000	40500	48000	12500	5200
	303R4	**231**	6.5	1830	1.4	12.0	71 ... 132	21000	24000	40500	48000	12900	5200
	303R4	**255**	5.9	1840	1.3	12.0	71 ... 132	21000	24000	40500	48000	13300	5200
	303R4	**290**	5.2	2650	1.6	12.0	71 ... 132	21000	24000	40500	48000	13900	5200
	303R4	**313**	4.8	1850	1.1	12.0	71 ... 132	21100	24100	40700	48300	14200	5200
	303R4	**336**	4.5	2270	1.2	12.0	71 ... 132	21300	24400	41200	48800	14600	5200
	303R4	**364**	4.1	2310	1.1	12.0	71 ... 132	21600	24700	41600	49300	15000	5200
	303R4	**390**	3.8	1930	0.88	12.0	71 ... 132	21800	24900	42000	49800	15300	5200
	303R4	**452**	3.3	2250	0.88	12.0	71 ... 132	22300	25400	42900	50900	16100	5200
	303R4	**528**	2.8	2030	0.68	12.0	71 ... 132	22800	26000	43900	52000	16900	5200
	303R4	**567**	2.6	2430	0.76	12.0	71 ... 132	23000	26300	44400	52600	17400	5200
	303R4	**659**	2.3	2110	0.57	12.0	71 ... 132	23500	26900	45300	53700	18200	5200
	303R4	**797**	1.9	1820	0.41	12.0	71 ... 132	24100	27600	46600	55200	19400	5200
	303R4	**824**	1.8	2200	0.47	12.0	71 ... 132	24300	27700	46800	55400	19700	5200
1000	**303R2**	**9.23**	108	1890	22.8	21.6	71 ... 132	9490	10800	19800	23500	5030	5200
	303R2	**10.9**	92	2140	21.9	21.6	71 ... 132	10000	11500	20800	24700	5320	5200
	303R2	**13.7**	73	2080	16.9	21.6	71 ... 132	10800	12400	22300	26400	5740	5200
	303R2	**15.9**	63	1820	12.7	21.6	71 ... 132	11400	13000	23300	27600	6030	5200

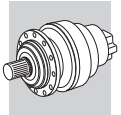

303 R

268

2970 Nm

n_1 min-1		i	n_2 min-1	M_{n2} Nm	P_{n1} kW	Pt kW	P (IEC)	Rn_2 [N] MC	MZ	HC/PC	HZ/PZ	FZ	$M_{2\,max}$ Nm
1000	**303R2**	**19.2**	52	1640	9.5	21.6	71 ... 132	12100	13900	24700	29300	6430	5200
	303R2	**24.8**	40	860	3.9	21.6	71 ... 132	13200	15100	26600	31600	7000	5200
	303R3	**25.7**	39	2160	9.6	16.8	71 ... 132	13300	15300	26900	31900	7080	5200
	303R3	**31.5**	32	2160	7.9	16.8	71 ... 132	14300	16300	28600	33900	7580	5200
	303R3	**37.1**	26.9	2460	7.6	16.8	71 ... 132	15100	17300	30100	35700	8010	5200
	303R3	**42.6**	23.5	2110	5.7	16.8	71 ... 132	15800	18100	31300	37200	8380	5200
	303R3	**46.6**	21.5	2170	5.3	16.8	71 ... 132	16300	18600	32200	38200	8640	5200
	303R3	**50.3**	19.9	2470	5.6	16.8	71 ... 132	16700	19100	32900	39000	8860	5200
	303R3	**54.2**	18.5	1820	3.9	16.8	71 ... 132	17100	19600	33700	39900	9080	5200
	303R3	**63.1**	15.9	2180	4.0	16.8	71 ... 132	18000	20600	35300	41800	9550	5200
	303R3	**73.3**	13.6	1820	2.8	16.8	71 ... 132	18900	21600	36900	43700	10000	5200
	303R3	**78.7**	12.7	2190	3.2	16.8	71 ... 132	19400	22200	37700	44700	10300	5200
	303R3	**91.5**	10.9	1820	2.3	16.8	71 ... 132	20400	23300	39400	46700	10800	5200
	303R3	**114**	8.7	1820	1.8	16.8	71 ... 132	21000	24000	40500	48000	11700	5200
	303R4	**129**	7.7	2710	2.5	14.4	71 ... 132	21000	24000	40500	48000	12100	5200
	303R4	**148**	6.7	2310	1.8	14.4	71 ... 132	21000	24000	40500	48000	12700	5200
	303R4	**158**	6.3	2760	2.1	14.4	71 ... 132	21000	24000	40500	48000	13000	5200
	303R4	**185**	5.4	2310	1.5	14.4	71 ... 132	21000	24000	40500	48000	13700	5200
	303R4	**214**	4.7	2810	1.6	14.4	71 ... 132	21200	24200	40900	48500	14400	5200
	303R4	**231**	4.3	1890	0.97	14.4	71 ... 132	21400	24500	41300	49000	14700	5200
	303R4	**255**	3.9	1920	0.89	14.4	71 ... 132	21700	24900	41900	49700	15200	5200
	303R4	**290**	3.4	2680	1.1	14.4	71 ... 132	22100	25300	42700	50600	15900	5200
	303R4	**313**	3.2	1990	0.75	14.4	71 ... 132	22400	25600	43200	51200	16300	5200
	303R4	**336**	3.0	2440	0.86	14.4	71 ... 132	22600	25800	43600	51700	16700	5200
	303R4	**364**	2.7	2480	0.81	14.4	71 ... 132	22900	26100	44100	52300	17100	5200
	303R4	**390**	2.6	2070	0.63	14.4	71 ... 132	23100	26400	44600	52800	17500	5200
	303R4	**452**	2.2	2250	0.59	14.4	71 ... 132	23600	27000	45500	53900	18400	5200
	303R4	**528**	1.9	2180	0.49	14.4	71 ... 132	24100	27600	46500	55100	19400	5200
	303R4	**567**	1.8	2600	0.54	14.4	71 ... 132	24400	27900	47000	55700	19900	5200
	303R4	**659**	1.5	2270	0.41	14.4	71 ... 132	24900	28500	48000	56900	20900	5200
	303R4	**797**	1.3	1930	0.29	14.4	71 ... 132	25600	29200	49300	58500	22300	5200
	303R4	**824**	1.2	2360	0.34	14.4	71 ... 132	25700	29400	49600	58800	22500	5200
500	**303R2**	**9.23**	54	2260	13.7	36	71 ... 132	12000	13700	24400	28900	6340	5200
	303R2	**10.9**	46	2570	13.2	36	71 ... 132	12600	14400	25600	30400	6700	5200
	303R2	**13.7**	37	2150	8.8	36	71 ... 132	13600	15600	27400	32500	7230	5200
	303R2	**15.9**	31	1820	6.4	36	71 ... 132	14300	16400	28700	34000	7600	5200
	303R2	**19.2**	26.0	1650	4.8	36	71 ... 132	15300	17500	30400	36000	8100	5200
	303R2	**24.8**	20.2	860	1.9	36	71 ... 132	16600	19000	32800	38900	8810	5200
	303R3	**25.7**	19.5	2230	5.0	28.0	71 ... 132	16800	19200	33200	39300	8920	5200
	303R3	**31.5**	15.9	2250	4.1	28.0	71 ... 132	18000	20600	35200	41800	9550	5200
	303R3	**37.1**	13.5	2590	4.0	28.0	71 ... 132	19000	21700	37000	43900	10100	5200
	303R3	**42.6**	11.7	2190	3.0	28.0	71 ... 132	19900	22700	38600	45700	10600	5200
	303R3	**46.6**	10.7	2200	2.7	28.0	71 ... 132	20500	23400	39700	47000	10900	5200
	303R3	**50.3**	9.9	2620	3.0	28.0	71 ... 132	21000	24000	40500	48000	11200	5200
	303R3	**54.2**	9.2	1820	1.9	28.0	71 ... 132	21000	24000	40500	48000	11400	5200
	303R3	**63.1**	7.9	2210	2.0	28.0	71 ... 132	21000	24000	40500	48000	12000	5200
	303R3	**73.3**	6.8	1830	1.4	28.0	71 ... 132	21000	24000	40500	48000	12700	5200
	303R3	**78.7**	6.4	2220	1.6	28.0	71 ... 132	21000	24000	40500	48000	13000	5200
	303R3	**91.5**	5.5	1840	1.2	28.0	71 ... 132	21000	24000	40500	48000	13600	5200
	303R3	**114**	4.4	1880	0.94	28.0	71 ... 132	21400	24500	41300	48900	14700	5200
	303R4	**129**	3.9	2810	1.3	24.0	71 ... 132	21800	24900	42000	49800	15300	5200
	303R4	**148**	3.4	2310	0.92	24.0	71 ... 132	22200	25400	42800	50800	16000	5200
	303R4	**158**	3.2	2810	1.0	24.0	71 ... 132	22400	25600	43200	51300	16400	5200
	303R4	**185**	2.7	2310	0.74	24.0	71 ... 132	22900	26200	44200	52400	17200	5200
	303R4	**214**	2.3	2820	0.78	24.0	71 ... 132	23400	26800	45200	53500	18100	5200
	303R4	**231**	2.2	2130	0.55	24.0	71 ... 132	23700	27000	45600	54100	18600	5200
	303R4	**255**	2.0	2170	0.50	24.0	71 ... 132	24000	27400	46300	54900	19200	5200
	303R4	**290**	1.7	2730	0.56	24.0	71 ... 132	24400	27900	47200	55900	20000	5200
	303R4	**313**	1.6	2250	0.43	24.0	71 ... 132	24700	28200	47700	56500	20500	5200
	303R4	**336**	1.5	2700	0.48	24.0	71 ... 132	25000	28500	48100	57100	21000	5200

B

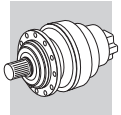

303 R — 268 — 2970 Nm

n_1 min^{-1}		i	n_2 min^{-1}	M_{n2} Nm	P_{n1} kW	Pt kW	P (IEC)	Rn_2 [N] MC	MZ	HC/PC	HZ/PZ	FZ	$M_{2\,max}$ Nm
500	**303R4**	**364**	1.4	2730	0.44	24.0	71 ... 132	25300	28900	48700	57700	21600	5200
	303R4	**390**	1.3	2340	0.35	24.0	71 ... 132	25500	29200	49200	58300	22100	5200
	303R4	**452**	1.1	2250	0.29	24.0	71 ... 132	26000	29800	50200	59500	23200	5200
	303R4	**528**	0.95	2440	0.27	24.0	71 ... 132	26600	30400	51400	60900	24000	5200
	303R4	**567**	0.88	2850	0.30	24.0	71 ... 132	26900	30700	51900	61500	24000	5200
	303R4	**659**	0.76	2440	0.22	24.0	71 ... 132	27500	31400	53000	62800	24000	5200
	303R4	**797**	0.63	2000	0.15	24.0	71 ... 132	28200	32300	54500	64600	24000	5200
	303R4	**824**	0.61	2440	0.18	24.0	71 ... 132	28400	32400	54700	64900	24000	5200

304 R — 280 — 3960 Nm

n_1 min^{-1}		i	n_2 min^{-1}	M_{n2} Nm	P_{n1} kW	Pt kW	P (IEC)	Rn_2 [N] MC	MZ	HC/PC	HZ/PZ	FZ	$M_{2\,max}$ Nm
1500	**304R2**	**9.23**	163	1680	30	18.0	71 ... 132	8290	9470	17500	20800	4400	6600
	304R2	**10.9**	138	1980	30	18.0	71 ... 132	8760	10000	18400	21900	4650	6600
	304R2	**13.7**	110	2490	30	18.0	71 ... 132	9450	10800	19700	23400	5010	6600
	304R2	**16.8**	89	2390	23.7	18.0	71 ... 132	10100	11600	21000	24900	5370	6600
	304R3	**25.7**	58	3020	15.0	14.0	71 ... 132	11700	13300	23900	28300	6190	7300
	304R3	**31.5**	48	3090	15.0	14.0	71 ... 132	12500	14300	25300	30000	6620	7300
	304R3	**37.1**	40	3440	15.0	14.0	71 ... 132	13200	15100	26600	31600	7000	7300
	304R3	**42.6**	35	3190	12.9	14.0	71 ... 132	13800	15800	27800	32900	7320	7300
	304R3	**46.6**	32	2850	10.5	14.0	71 ... 132	14200	16300	28500	33800	7550	7300
	304R3	**50.3**	29.8	3460	11.9	14.0	71 ... 132	14600	16700	29200	34600	7740	7300
	304R3	**63.1**	23.8	2850	7.8	14.0	71 ... 132	15700	18000	31200	37000	8350	7300
	304R3	**78.7**	19.1	2850	6.2	14.0	71 ... 132	16900	19400	33400	39600	8990	7300
	304R3	**97.0**	15.5	2390	4.2	14.0	71 ... 132	18200	20800	35500	42100	9630	7300
	304R3	**121**	12.4	2390	3.4	14.0	71 ... 132	19600	22400	38000	45000	10400	7300
	304R4	**89.4**	16.8	3330	6.6	12.0	71 ... 132	17700	20200	34700	41100	9370	7300
	304R4	**109**	13.7	3370	5.5	12.0	71 ... 132	18900	21600	36900	43700	10000	7300
	304R4	**129**	11.6	3530	4.8	12.0	71 ... 132	20000	22800	38700	45900	10600	7300
	304R4	**148**	10.1	3440	4.1	12.0	71 ... 132	20900	23900	40400	47800	11100	7300
	304R4	**158**	9.5	3550	4.0	12.0	71 ... 132	21000	24000	40500	48000	11300	7300
	304R4	**185**	8.1	3460	3.3	12.0	71 ... 132	21000	24000	40500	48000	11900	7300
	304R4	**214**	7.0	3620	3.0	12.0	71 ... 132	21000	24000	40500	48000	12500	7300
	304R4	**227**	6.6	3480	2.7	12.0	71 ... 132	21000	24000	40500	48000	12800	7300
	304R4	**267**	5.6	3660	2.4	12.0	71 ... 132	21000	24000	40500	48000	13500	7300
	304R4	**290**	5.2	3680	2.3	12.0	71 ... 132	21000	24000	40500	48000	13900	7300
	304R4	**307**	4.9	3500	2.0	12.0	71 ... 132	21100	24100	40600	48100	14100	7300
	304R4	**338**	4.4	2420	1.3	12.0	71 ... 132	21400	24400	41200	48800	14600	7300
	304R4	**364**	4.1	2940	1.4	12.0	71 ... 132	21600	24700	41600	49300	15000	7300
	304R4	**414**	3.6	2470	1.1	12.0	71 ... 132	22000	25100	42400	50300	15600	7300
	304R4	**452**	3.3	3690	1.4	12.0	71 ... 132	22300	25400	42900	50900	16100	7300
	304R4	**560**	2.7	2540	0.81	12.0	71 ... 132	23000	26200	44300	52500	17300	7300
	304R4	**699**	2.1	2630	0.67	12.0	71 ... 132	23700	27100	45700	54200	18600	7300
1000	**304R2**	**9.23**	108	1890	22.8	21.6	71 ... 132	9490	10800	19800	23500	5030	6600
	304R2	**10.9**	92	2240	22.9	21.6	71 ... 132	10000	11500	20800	24700	5320	6600
	304R2	**13.7**	73	2690	21.9	21.6	71 ... 132	10800	12400	22300	26400	5740	6600
	304R2	**16.8**	59	2390	15.8	21.6	71 ... 132	11600	13300	23700	28100	6150	6600
	304R3	**25.7**	39	3130	14.0	16.8	71 ... 132	13300	15300	26900	31900	7080	7300
	304R3	**31.5**	32	3180	11.6	16.8	71 ... 132	14300	16300	28600	33900	7580	7300
	304R3	**37.1**	26.9	3470	10.7	16.8	71 ... 132	15100	17300	30100	35700	8010	7300
	304R3	**42.6**	23.5	3270	8.8	16.8	71 ... 132	15800	18100	31300	37200	8380	7300
	304R3	**46.6**	21.5	2850	7.0	16.8	71 ... 132	16300	18600	32200	38200	8640	7300
	304R3	**50.3**	19.9	3490	8.0	16.8	71 ... 132	16700	19100	32900	39000	8860	7300
	304R3	**63.1**	15.9	2850	5.2	16.8	71 ... 132	18000	20600	35300	41800	9550	7300
	304R3	**78.7**	12.7	2850	4.2	16.8	71 ... 132	19400	22200	37700	44700	10300	7300
	304R3	**97.0**	10.3	2390	2.8	16.8	71 ... 132	20800	23800	40100	47600	11000	7300
	304R3	**121**	8.2	2390	2.3	16.8	71 ... 132	21000	24000	40500	48000	11900	7300

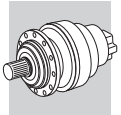

304 R — 280 — 3960 Nm

n_1 min^{-1}		i	n_2 min^{-1}	M_{n2} Nm	P_{n1} kW	Pt kW	P (IEC)	Rn_2 [N] MC	MZ	HC/PC	HZ/PZ	FZ	$M_{2\,max}$ Nm
1000	**304R4**	**89.4**	11.2	3420	4.5	14.4	71 ... 132	20200	23100	39200	46400	10700	7300
	304R4	**109**	9.1	3450	3.7	14.4	71 ... 132	21000	24000	40500	48000	11500	7300
	304R4	**129**	7.7	3590	3.3	14.4	71 ... 132	21000	24000	40500	48000	12100	7300
	304R4	**148**	6.7	3470	2.8	14.4	71 ... 132	21000	24000	40500	48000	12700	7300
	304R4	**158**	6.3	3640	2.7	14.4	71 ... 132	21000	24000	40500	48000	13000	7300
	304R4	**185**	5.4	3490	2.2	14.4	71 ... 132	21000	24000	40500	48000	13700	7300
	304R4	**214**	4.7	3700	2.0	14.4	71 ... 132	21200	24200	40900	48500	14400	7300
	304R4	**227**	4.4	3500	1.8	14.4	71 ... 132	21400	24400	41200	48900	14600	7300
	304R4	**267**	3.7	3720	1.6	14.4	71 ... 132	21900	25000	42200	50000	15500	7300
	304R4	**290**	3.4	3720	1.5	14.4	71 ... 132	22100	25300	42700	50600	15900	7300
	304R4	**307**	3.3	3510	1.4	14.4	71 ... 132	22300	25500	43000	51000	16200	7300
	304R4	**338**	3.0	2520	0.88	14.4	71 ... 132	22600	25900	43600	51700	16700	7300
	304R4	**364**	2.7	3140	1.0	14.4	71 ... 132	22900	26100	44100	52300	17100	7300
	304R4	**414**	2.4	2580	0.74	14.4	71 ... 132	23300	26600	44900	53200	17900	7300
	304R4	**452**	2.2	3740	0.98	14.4	71 ... 132	23600	27000	45500	53900	18400	7300
	304R4	**560**	1.8	2720	0.57	14.4	71 ... 132	24300	27800	46900	55600	19800	7300
	304R4	**699**	1.4	2830	0.48	14.4	71 ... 132	25100	28700	48400	57400	21300	7300
500	**304R2**	**9.23**	54	2330	14.1	36	71 ... 132	12000	13700	24400	28900	6340	6600
	304R2	**10.9**	46	2720	13.9	36	71 ... 132	12600	14400	25600	30400	6700	6600
	304R2	**13.7**	37	2850	11.6	36	71 ... 132	13600	15600	27400	32500	7230	6600
	304R2	**16.8**	29.7	2390	7.9	36	71 ... 132	14600	16700	29200	34600	7750	6600
	304R3	**25.7**	19.5	3290	7.3	28.0	71 ... 132	16800	19200	33200	39300	8920	7300
	304R3	**31.5**	15.9	3330	6.1	28.0	71 ... 132	18000	20600	35200	41800	9550	7300
	304R3	**37.1**	13.5	3520	5.4	28.0	71 ... 132	19000	21700	37000	43900	10100	7300
	304R3	**42.6**	11.7	3410	4.6	28.0	71 ... 132	19900	22700	38600	45700	10600	7300
	304R3	**46.6**	10.7	2850	3.5	28.0	71 ... 132	20500	23400	39700	47000	10900	7300
	304R3	**50.3**	9.9	3540	4.0	28.0	71 ... 132	21000	24000	40500	48000	11200	7300
	304R3	**63.1**	7.9	2850	2.6	28.0	71 ... 132	21000	24000	40500	48000	12000	7300
	304R3	**78.7**	6.4	2850	2.1	28.0	71 ... 132	21000	24000	40500	48000	13000	7300
	304R3	**97.0**	5.2	2390	1.4	28.0	71 ... 132	21000	24000	40500	48000	13900	7300
	304R3	**121**	4.1	2440	1.2	28.0	71 ... 132	21600	24700	41600	49300	15000	7300
	304R4	**89.4**	5.6	3490	2.3	24.0	71 ... 132	21000	24000	40500	48000	13500	7300
	304R4	**109**	4.6	3500	1.9	24.0	71 ... 132	21300	24300	41000	48600	14500	7300
	304R4	**129**	3.9	3710	1.7	24.0	71 ... 132	21800	24900	42000	49800	15300	7300
	304R4	**148**	3.4	3510	1.4	24.0	71 ... 132	22200	25400	42800	50800	16000	7300
	304R4	**158**	3.2	3730	1.4	24.0	71 ... 132	22400	25600	43200	51300	16400	7300
	304R4	**185**	2.7	3520	1.1	24.0	71 ... 132	22900	26200	44200	52400	17200	7300
	304R4	**214**	2.3	3770	1.0	24.0	71 ... 132	23400	26800	45200	53500	18100	7300
	304R4	**227**	2.2	3550	0.93	24.0	71 ... 132	23600	27000	45500	53900	18400	7300
	304R4	**267**	1.9	3820	0.84	24.0	71 ... 132	24200	27600	46600	55200	19500	7300
	304R4	**290**	1.7	3830	0.78	24.0	71 ... 132	24400	27900	47200	55900	20000	7300
	304R4	**307**	1.6	3610	0.70	24.0	71 ... 132	24600	28200	47500	56300	20400	7300
	304R4	**338**	1.5	2810	0.49	24.0	71 ... 132	25000	28600	48200	57100	21100	7300
	304R4	**364**	1.4	3540	0.58	24.0	71 ... 132	25300	28900	48700	57700	21600	7300
	304R4	**414**	1.2	2910	0.42	24.0	71 ... 132	25700	29400	49600	58800	22500	7300
	304R4	**452**	1.1	3930	0.51	24.0	71 ... 132	26000	29800	50200	59500	23200	7300
	304R4	**560**	0.89	3010	0.32	24.0	71 ... 132	26900	30700	51800	61400	24000	7300
	304R4	**699**	0.71	3010	0.25	24.0	71 ... 132	27700	31700	53500	63400	24000	7300

305 R — 292 — 5600 Nm

n_1 min^{-1}		i	n_2 min^{-1}	M_{n2} Nm	P_{n1} kW	Pt kW	P (IEC)	Rn_2 [N] MC	MZ	HC/PC	HZ/PZ	FZ	$M_{2\,max}$ Nm
1500	**305R2**	**9.23**	163	1680	30	18.0	71 ... 132	8290	9470	17500	20800	4400	7700
	305R2	**10.9**	138	1980	30	18.0	71 ... 132	8760	10000	18400	21900	4650	7700
	305R2	**13.7**	110	2490	30	18.0	71 ... 132	9450	10800	19700	23400	5010	7700
	305R2	**15.9**	94	2890	30	18.0	71 ... 132	9940	11400	20700	24500	5270	7700
	305R2	**19.2**	78	2860	24.9	18.0	71 ... 132	10600	12100	21900	25900	5620	7700

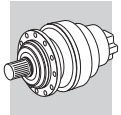

305 R

292

5600 Nm

n_1 min^{-1}		i	n_2 min^{-1}	M_{n2} Nm	P_{n1} kW	Pt kW	P (IEC)	Rn_2 [N] MC	MZ	HC/PC	HZ/PZ	FZ	$M_{2\,max}$ Nm
1500	**305R3**	**25.7**	58	3630	15.0	14.0	71 ... 132	11700	13300	23900	28300	6190	8800
	305R3	**31.5**	48	3770	15.0	14.0	71 ... 132	12500	14300	25300	30000	6620	8800
	305R3	**37.1**	40	4340	15.0	14.0	71 ... 132	13200	15100	26600	31600	7000	8800
	305R3	**42.6**	35	3790	15.0	14.0	71 ... 132	13800	15800	27800	32900	7320	8800
	305R3	**46.6**	32	4310	15.0	14.0	71 ... 132	14200	16300	28500	33800	7550	8800
	305R3	**50.3**	29.8	4410	15.0	14.0	71 ... 132	14600	16700	29200	34600	7740	8800
	305R3	**54.2**	27.7	3570	11.3	14.0	71 ... 132	15000	17100	29800	35400	7930	8800
	305R3	**63.1**	23.8	4330	11.8	14.0	71 ... 132	15700	18000	31200	37000	8350	8800
	305R3	**73.3**	20.5	3580	8.4	14.0	71 ... 132	16500	18900	32700	38700	8780	8800
	305R3	**78.7**	19.1	4350	9.5	14.0	71 ... 132	16900	19400	33400	39600	8990	8800
	305R3	**91.5**	16.4	3580	6.7	14.0	71 ... 132	17800	20400	34900	41400	9450	8800
	305R3	**114**	13.1	3580	5.4	14.0	71 ... 132	19200	21900	37300	44300	10200	8800
	305R4	**129**	11.6	5200	7.1	12.0	71 ... 132	20000	22800	38700	45900	10600	8800
	305R4	**148**	10.1	4480	5.4	12.0	71 ... 132	20900	23900	40400	47800	11100	8800
	305R4	**158**	9.5	5310	6.0	12.0	71 ... 132	21000	24000	40500	48000	11300	8800
	305R4	**185**	8.1	4490	4.3	12.0	71 ... 132	21000	24000	40500	48000	11900	8800
	305R4	**214**	7.0	5390	4.5	12.0	71 ... 132	21000	24000	40500	48000	12500	8800
	305R4	**231**	6.5	3600	2.8	12.0	71 ... 132	21000	24000	40500	48000	12900	8800
	305R4	**255**	5.9	3600	2.5	12.0	71 ... 132	21000	24000	40500	48000	13300	8800
	305R4	**290**	5.2	5300	3.2	12.0	71 ... 132	21000	24000	40500	48000	13900	8800
	305R4	**313**	4.8	3620	2.1	12.0	71 ... 132	21100	24100	40700	48300	14200	8800
	305R4	**336**	4.5	4560	2.4	12.0	71 ... 132	21300	24400	41200	48800	14600	8800
	305R4	**364**	4.1	4620	2.3	12.0	71 ... 132	21600	24700	41600	49300	15000	8800
	305R4	**390**	3.8	3750	1.7	12.0	71 ... 132	21800	24900	42000	49800	15300	8800
	305R4	**452**	3.3	4750	1.9	12.0	71 ... 132	22300	25400	42900	50900	16100	8800
	305R4	**528**	2.8	3920	1.3	12.0	71 ... 132	22800	26000	43900	52000	16900	8800
	305R4	**567**	2.6	4860	1.5	12.0	71 ... 132	23000	26300	44400	52600	17400	8800
	305R4	**659**	2.3	4070	1.1	12.0	71 ... 132	23500	26900	45300	53700	18200	8800
	305R4	**797**	1.9	3450	0.77	12.0	71 ... 132	24100	27600	46600	55200	19400	8800
	305R4	**824**	1.8	4230	0.91	12.0	71 ... 132	24300	27700	46800	55400	19700	8800
1000	**305R2**	**9.23**	108	1890	22.8	21.6	71 ... 132	9490	10800	19800	23500	5030	7700
	305R2	**10.9**	92	2240	22.9	21.6	71 ... 132	10000	11500	20800	24700	5320	7700
	305R2	**13.7**	73	2810	22.9	21.6	71 ... 132	10800	12400	22300	26400	5740	7700
	305R2	**15.9**	63	3270	22.9	21.6	71 ... 132	11400	13000	23300	27600	6030	7700
	305R2	**19.2**	52	2990	17.3	21.6	71 ... 132	12100	13900	24700	29300	6430	7700
	305R3	**25.7**	39	3900	15.0	16.8	71 ... 132	13300	15300	26900	31900	7080	8800
	305R3	**31.5**	32	3950	14.4	16.8	71 ... 132	14300	16300	28600	33900	7580	8800
	305R3	**37.1**	26.9	4600	14.2	16.8	71 ... 132	15100	17300	30100	35700	8010	8800
	305R3	**42.6**	23.5	3990	10.7	16.8	71 ... 132	15800	18100	31300	37200	8380	8800
	305R3	**46.6**	21.5	4340	10.7	16.8	71 ... 132	16300	18600	32200	38200	8640	8800
	305R3	**50.3**	19.9	4700	10.7	16.8	71 ... 132	16700	19100	32900	39000	8860	8800
	305R3	**54.2**	18.5	3580	7.6	16.8	71 ... 132	17100	19600	33700	39900	9080	8800
	305R3	**63.1**	15.9	4370	7.9	16.8	71 ... 132	18000	20600	35300	41800	9550	8800
	305R3	**73.3**	13.6	3590	5.6	16.8	71 ... 132	18900	21600	36900	43700	10000	8800
	305R3	**78.7**	12.7	4380	6.4	16.8	71 ... 132	19400	22200	37700	44700	10300	8800
	305R3	**91.5**	10.9	3600	4.5	16.8	71 ... 132	20400	23300	39400	46700	10800	8800
	305R3	**114**	8.7	3600	3.6	16.8	71 ... 132	21000	24000	40500	48000	11700	8800
	305R4	**129**	7.7	5370	4.9	14.4	71 ... 132	21000	24000	40500	48000	12100	8800
	305R4	**148**	6.7	4490	3.6	14.4	71 ... 132	21000	24000	40500	48000	12700	8800
	305R4	**158**	6.3	5420	4.0	14.4	71 ... 132	21000	24000	40500	48000	13000	8800
	305R4	**185**	5.4	4490	2.9	14.4	71 ... 132	21000	24000	40500	48000	13700	8800
	305R4	**214**	4.7	5480	3.0	14.4	71 ... 132	21200	24200	40900	48500	14400	8800
	305R4	**231**	4.3	3680	1.9	14.4	71 ... 132	21400	24500	41300	49000	14700	8800
	305R4	**255**	3.9	3740	1.7	14.4	71 ... 132	21700	24900	41900	49700	15200	8800
	305R4	**290**	3.4	5350	2.2	14.4	71 ... 132	22100	25300	42700	50600	15900	8800
	305R4	**313**	3.2	3850	1.5	14.4	71 ... 132	22400	25600	43200	51200	16300	8800
	305R4	**336**	3.0	4890	1.7	14.4	71 ... 132	22600	25800	43600	51700	16700	8800
	305R4	**364**	2.7	4960	1.6	14.4	71 ... 132	22900	26100	44100	52300	17100	8800
	305R4	**390**	2.6	3980	1.2	14.4	71 ... 132	23100	26400	44600	52800	17500	8800
	305R4	**452**	2.2	4750	1.2	14.4	71 ... 132	23600	27000	45500	53900	18400	8800
	305R4	**528**	1.9	4200	0.94	14.4	71 ... 132	24100	27600	46500	55100	19400	8800

B

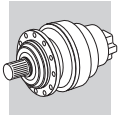

305 R — 292 — 5600 Nm

n_1 min^{-1}		i	n_2 min^{-1}	M_{n2} Nm	P_{n1} kW	Pt kW	P (IEC)	Rn_2 [N] MC	MZ	HC/PC	HZ/PZ	FZ	$M_{2\,max}$ Nm
1000	**305R4**	**567**	1.8	5160	1.1	14.4	71 ... 132	24400	27900	47000	55700	19900	8800
	305R4	**659**	1.5	4360	0.78	14.4	71 ... 132	24900	28500	48000	56900	20900	8800
	305R4	**797**	1.3	3670	0.54	14.4	71 ... 132	25600	29200	49300	58500	22300	8800
	305R4	**824**	1.2	4530	0.65	14.4	71 ... 132	25700	29400	49600	58800	22500	8800
500	**305R2**	**9.23**	54	2330	14.1	36	71 ... 132	12000	13700	24400	28900	6340	7700
	305R2	**10.9**	46	2750	14.0	36	71 ... 132	12600	14400	25600	30400	6700	7700
	305R2	**13.7**	37	3340	13.6	36	71 ... 132	13600	15600	27400	32500	7230	7700
	305R2	**15.9**	31	3530	12.4	36	71 ... 132	14300	16400	28700	34000	7600	7700
	305R2	**19.2**	26	3040	8.8	36	71 ... 132	15300	17500	30400	36000	8100	7700
	305R3	**25.7**	19.5	4190	9.4	28.0	71 ... 132	16800	19200	33200	39300	8920	8800
	305R3	**31.5**	15.9	4260	7.8	28.0	71 ... 132	18000	20600	35200	41800	9550	8800
	305R3	**37.1**	13.5	5080	7.8	28.0	71 ... 132	19000	21700	37000	43900	10100	8800
	305R3	**42.6**	11.7	4340	5.9	28.0	71 ... 132	19900	22700	38600	45700	10600	8800
	305R3	**46.6**	10.7	4390	5.4	28.0	71 ... 132	20500	23400	39700	47000	10900	8800
	305R3	**50.3**	9.9	5230	6.0	28.0	71 ... 132	21000	24000	40500	48000	11200	8800
	305R3	**54.2**	9.2	3600	3.8	28.0	71 ... 132	21000	24000	40500	48000	11400	8800
	305R3	**63.1**	7.9	4420	4.0	28.0	71 ... 132	21000	24000	40500	48000	12000	8800
	305R3	**73.3**	6.8	3600	2.8	28.0	71 ... 132	21000	24000	40500	48000	12700	8800
	305R3	**78.7**	6.4	4450	3.2	28.0	71 ... 132	21000	24000	40500	48000	13000	8800
	305R3	**91.5**	5.5	3600	2.3	28.0	71 ... 132	21000	24000	40500	48000	13600	8800
	305R3	**114**	4.4	3670	1.8	28.0	71 ... 132	21400	24500	41300	48900	14700	8800
	305R4	**129**	3.9	5480	2.5	24.0	71 ... 132	21800	24900	42000	49800	15300	8800
	305R4	**148**	3.4	4490	1.8	24.0	71 ... 132	22200	25400	42800	50800	16000	8800
	305R4	**158**	3.2	5490	2.1	24.0	71 ... 132	22400	25600	43200	51300	16400	8800
	305R4	**185**	2.7	4490	1.4	24.0	71 ... 132	22900	26200	44200	52400	17200	8800
	305R4	**214**	2.3	5520	1.5	24.0	71 ... 132	23400	26800	45200	53500	18100	8800
	305R4	**231**	2.2	4100	1.1	24.0	71 ... 132	23700	27000	45600	54100	18600	8800
	305R4	**255**	2.0	4170	0.97	24.0	71 ... 132	24000	27400	46300	54900	19200	8800
	305R4	**290**	1.7	5450	1.1	24.0	71 ... 132	24400	27900	47200	55900	20000	8800
	305R4	**313**	1.6	4320	0.82	24.0	71 ... 132	24700	28200	47700	56500	20500	8800
	305R4	**336**	1.5	5350	0.94	24.0	71 ... 132	25000	28500	48100	57100	21000	8800
	305R4	**364**	1.4	5400	0.88	24.0	71 ... 132	25300	28900	48700	57700	21600	8800
	305R4	**390**	1.3	4490	0.68	24.0	71 ... 132	25500	29200	49200	58300	22100	8800
	305R4	**452**	1.1	4750	0.62	24.0	71 ... 132	26000	29800	50200	59500	23200	8800
	305R4	**528**	0.95	4690	0.53	24.0	71 ... 132	26600	30400	51400	60900	24000	8800
	305R4	**567**	0.88	5600	0.58	24.0	71 ... 132	26900	30700	51900	61500	24000	8800
	305R4	**659**	0.76	4690	0.42	24.0	71 ... 132	27500	31400	53000	62800	24000	8800
	305R4	**797**	0.63	3800	0.28	24.0	71 ... 132	28200	32300	54500	64600	24000	8800
	305R4	**824**	0.61	4690	0.34	24.0	71 ... 132	28400	32400	54700	64900	24000	8800

306 R — 304 — 7300 Nm

n_1 min^{-1}		i	n_2 min^{-1}	M_{n2} Nm	P_{n1} kW	Pt kW	P (IEC)	Rn_2 [N] MC	MZ	HC/PC	HZ/PZ	FZ	$M_{2\,max}$ Nm
1500	**306R2**	**9.23**	163	1680	30	18.0	71 ... 160	9870	11200	24700	28500	6410	12000
	306R2	**10.9**	138	1980	30	18.0	71 ... 160	10400	11900	26000	30000	6780	12000
	306R2	**13.7**	110	2490	30	18.0	71 ... 160	11200	12800	27800	32100	7310	12000
	306R2	**15.9**	94	2890	30	18.0	71 ... 160	11800	13500	29100	33600	7690	12000
	306R2	**19.2**	78	3490	30	18.0	71 ... 160	12600	14400	30800	35500	8190	12000
	306R3	**33.2**	45	5810	30	14.0	71 ... 160	15100	17200	36300	41900	9830	14900
	306R3	**39.2**	38	6550	28.8	14.0	71 ... 160	16000	18200	38100	44000	10400	14900
	306R3	**46.3**	32	7510	27.9	14.0	71 ... 160	16900	19300	40100	46200	11000	14900
	306R3	**58.1**	25.8	7580	22.5	14.0	71 ... 160	18200	20800	42900	49500	11800	14900
	306R3	**67.5**	22.2	7090	18.1	14.0	71 ... 160	19200	21800	44900	51800	12500	14900
	306R3	**72.9**	20.6	7420	17.5	14.0	71 ... 160	19700	22400	45900	53000	12800	14900
	306R3	**84.7**	17.7	7530	15.3	14.0	71 ... 160	20700	23600	48000	55400	13400	14900
	306R3	**98.5**	15.2	6490	11.3	14.0	71 ... 160	21700	24800	50200	58000	14100	14900
	306R3	**119**	12.6	6490	9.4	14.0	71 ... 160	23200	26400	53200	61400	15000	14900

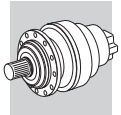

306 R	304	7300 Nm

n_1 min^{-1}		i	n_2 min^{-1}	M_{n2} Nm	P_{n1} kW	Pt kW	P (IEC)	Rn_2 [N] MC	MZ	HC/PC	HZ/PZ	FZ	$M_{2\,max}$ Nm
1500	**306R3**	**144**	10.4	5490	6.6	14.0	71 ... 160	24700	28100	56300	65000	16000	14900
	306R4	**158**	9.5	9620	10.8	12.0	71 ... 160	25000	28500	57000	65800	16500	14900
	306R4	**168**	8.9	7560	8.0	12.0	71 ... 160	25000	28500	57000	65800	16900	14900
	306R4	**181**	8.3	9450	9.3	12.0	71 ... 160	25000	28500	57000	65800	17300	14900
	306R4	**214**	7.0	9730	8.1	12.0	71 ... 160	25000	28500	57000	65800	18300	14900
	306R4	**230**	6.5	7590	5.8	12.0	71 ... 160	25000	28500	57000	65800	18700	14900
	306R4	**249**	6.0	8200	5.9	12.0	71 ... 160	25000	28500	57000	65800	19200	14900
	306R4	**289**	5.2	8280	5.1	12.0	71 ... 160	25000	28500	57000	65800	20200	14900
	306R4	**312**	4.8	7590	4.3	12.0	71 ... 160	25100	28700	57300	66200	20700	14900
	306R4	**389**	3.9	7590	3.5	12.0	71 ... 160	25900	29600	59200	68300	22300	14900
	306R4	**420**	3.6	8790	3.7	12.0	71 ... 160	26200	29900	59800	69000	22900	14900
	306R4	**455**	3.3	7020	2.7	12.0	71 ... 160	26500	30200	60500	69800	23500	14900
	306R4	**488**	3.1	9020	3.3	12.0	71 ... 160	26800	30600	61100	70500	24100	14900
	306R4	**550**	2.7	7260	2.3	12.0	71 ... 160	27300	31100	62200	71800	25100	14900
	306R4	**590**	2.5	8480	2.5	12.0	71 ... 160	27500	31400	62800	72500	25600	14900
	306R4	**665**	2.3	6010	1.6	12.0	71 ... 160	28000	31900	63900	73700	26700	14900
	306R4	**830**	1.8	6270	1.3	12.0	71 ... 160	28900	33000	65900	76100	28700	14900
1000													
	306R2	**9.23**	108	1890	22.8	21.6	71 ... 160	11300	12900	27900	32200	7340	12000
	306R2	**10.9**	92	2240	22.9	21.6	71 ... 160	11900	13600	29300	33800	7760	12000
	306R2	**13.7**	73	2810	22.9	21.6	71 ... 160	12900	14700	31400	36200	8370	12000
	306R2	**15.9**	63	3270	22.9	21.6	71 ... 160	13500	15400	32800	37900	8800	12000
	306R2	**19.2**	52	3940	22.8	21.6	71 ... 160	14400	16400	34800	40100	9380	12000
	306R3	**33.2**	30	6330	21.9	16.8	71 ... 160	17300	19700	41000	47300	11300	14900
	306R3	**39.2**	25.5	7280	21.3	16.8	71 ... 160	18300	20900	43000	49700	11900	14900
	306R3	**46.3**	21.6	8170	20.3	16.8	71 ... 160	19300	22000	45200	52200	12600	14900
	306R3	**58.1**	17.2	8200	16.2	16.8	71 ... 160	20900	23800	48400	55900	13600	14900
	306R3	**67.5**	14.8	7340	12.5	16.8	71 ... 160	21900	25000	50700	58500	14300	14900
	306R3	**72.9**	13.7	7710	12.1	16.8	71 ... 160	22500	25600	51800	59800	14600	14900
	306R3	**84.7**	11.8	7820	10.6	16.8	71 ... 160	23700	27000	54200	62600	15400	14900
	306R3	**98.5**	10.2	6500	7.6	16.8	71 ... 160	24900	28400	56700	65500	16200	14900
	306R3	**119**	8.4	6510	6.3	16.8	71 ... 160	25000	28500	57000	65800	17200	14900
	306R3	**144**	6.9	5500	4.4	16.8	71 ... 160	25000	28500	57000	65800	18400	14900
	306R4	**158**	6.3	9760	7.3	14.4	71 ... 160	25000	28500	57000	65800	18900	14900
	306R4	**168**	6.0	7660	5.4	14.4	71 ... 160	25000	28500	57000	65800	19300	14900
	306R4	**181**	5.5	9450	6.2	14.4	71 ... 160	25000	28500	57000	65800	19800	14900
	306R4	**214**	4.7	9850	5.5	14.4	71 ... 160	25200	28800	57500	66400	20900	14900
	306R4	**230**	4.3	7590	3.9	14.4	71 ... 160	25500	29100	58200	67100	21500	14900
	306R4	**249**	4.0	8620	4.1	14.4	71 ... 160	25800	29400	58800	67900	22000	14900
	306R4	**289**	3.5	8840	3.6	14.4	71 ... 160	26300	30000	60100	69400	23100	14900
	306R4	**312**	3.2	7590	2.9	14.4	71 ... 160	26600	30400	60700	70100	23700	14900
	306R4	**389**	2.6	7590	2.3	14.4	71 ... 160	27500	31300	62700	72400	25500	14900
	306R4	**420**	2.4	9390	2.6	14.4	71 ... 160	27800	31700	63400	73200	26200	14900
	306R4	**455**	2.2	7530	2.0	14.4	71 ... 160	28100	32000	64100	74000	26900	14900
	306R4	**488**	2.0	9390	2.3	14.4	71 ... 160	28400	32400	64700	74700	27600	14900
	306R4	**550**	1.8	7740	1.7	14.4	71 ... 160	28900	32900	65900	76000	28700	14900
	306R4	**590**	1.7	8910	1.8	14.4	71 ... 160	29200	33300	66500	76800	29400	14900
	306R4	**665**	1.5	6490	1.2	14.4	71 ... 160	29700	33800	67700	78100	30600	14900
	306R4	**830**	1.2	6760	0.96	14.4	71 ... 160	30600	34900	69900	80600	32900	14900
500													
	306R2	**9.23**	54	2330	14.1	36	71 ... 160	14200	16200	34300	39600	9250	12000
	306R2	**10.9**	46	2750	14.0	36	71 ... 160	15000	17100	36100	41700	9770	12000
	306R2	**13.7**	37	3460	14.1	36	71 ... 160	16200	18500	38600	44600	10500	12000
	306R2	**15.9**	31	4020	14.1	36	71 ... 160	17100	19400	40400	46600	11100	12000
	306R2	**19.2**	26	4510	13.1	36	71 ... 160	18200	20700	42800	49400	11800	12000
	306R3	**33.2**	15.1	7350	12.7	28.0	71 ... 160	21800	24900	50400	58200	14200	14900
	306R3	**39.2**	12.8	8730	12.8	28.0	71 ... 160	23100	26300	53000	61200	15000	14900
	306R3	**46.3**	10.8	9450	11.7	28.0	71 ... 160	24400	27800	55700	64300	15800	14900
	306R3	**58.1**	8.6	9100	9.0	28.0	71 ... 160	25000	28500	57000	65800	17100	14900
	306R3	**67.5**	7.4	7590	6.4	28.0	71 ... 160	25000	28500	57000	65800	18000	14900
	306R3	**72.9**	6.9	8140	6.4	28.0	71 ... 160	25000	28500	57000	65800	18400	14900

B

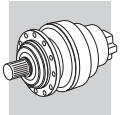

306 R — 304 — 7300 Nm

n_1 min^{-1}		i	n_2 min^{-1}	M_{n2} Nm	P_{n1} kW	Pt kW	P (IEC)	Rn_2 [N] MC	MZ	HC/PC	HZ/PZ	FZ	$M_{2\,max}$ Nm
500	**306R3**	**84.7**	5.9	8210	5.6	28.0	71 ... 160	25000	28500	57000	65800	19400	14900
	306R3	**98.5**	5.1	6530	3.8	28.0	71 ... 160	25000	28500	57000	65800	20400	14900
	306R3	**119**	4.2	6730	3.2	28.0	71 ... 160	25600	29200	58400	67500	21700	14900
	306R3	**144**	3.5	5710	2.3	28.0	71 ... 160	26300	30000	60100	69300	23100	14900
	306R4	**158**	3.2	9850	3.7	24.0	71 ... 160	26700	30400	60800	70200	23800	14900
	306R4	**168**	3.0	7700	2.7	24.0	71 ... 160	26900	30700	61400	70800	24300	14900
	306R4	**181**	2.8	9450	3.1	24.0	71 ... 160	27200	31000	62000	71600	24900	14900
	306R4	**214**	2.3	9890	2.7	24.0	71 ... 160	27900	31800	63500	73300	26400	14900
	306R4	**230**	2.2	7640	2.0	24.0	71 ... 160	28200	32100	64200	74100	27000	14900
	306R4	**249**	2.0	9520	2.3	24.0	71 ... 160	28500	32500	64900	74900	27700	14900
	306R4	**289**	1.7	9430	1.9	24.0	71 ... 160	29100	33200	66300	76600	29200	14900
	306R4	**312**	1.6	7730	1.5	24.0	71 ... 160	29400	33500	67000	77400	29900	14900
	306R4	**389**	1.3	8240	1.3	24.0	71 ... 160	30400	34600	69200	79900	32200	14900
	306R4	**420**	1.2	9940	1.4	24.0	71 ... 160	30700	35000	70000	80800	33000	14900
	306R4	**455**	1.1	8490	1.1	24.0	71 ... 160	31000	35400	70800	81700	33900	14900
	306R4	**488**	1.0	9530	1.2	24.0	71 ... 160	31400	35700	71500	82500	34700	14900
	306R4	**550**	0.91	8500	0.91	24.0	71 ... 160	31900	36400	72700	83900	35000	14900
	306R4	**590**	0.85	9500	0.95	24.0	71 ... 160	32200	36700	73500	84800	35000	14900
	306R4	**665**	0.75	7000	0.62	24.0	71 ... 160	32800	37400	74700	86300	35000	14900
	306R4	**830**	0.60	7000	0.50	24.0	71 ... 160	33800	38600	77100	89000	35000	14900

307 R — 316 — 14000 Nm

n_1 min^{-1}		i	n_2 min^{-1}	M_{n2} Nm	P_{n1} kW	Pt kW	P (IEC)	Rn_2 [N] MC	MZ	HC/PC	HZ/PZ	FZ	$M_{2\,max}$ Nm
1500	**307R2**	**13.0**	116	5110	66	35	132 ... 200	13300	16600	32400	42600	9230	18600
	307R2	**15.5**	97	6090	66	35	132 ... 200	14100	17600	34100	44900	9790	21000
	307R2	**19.8**	76	7820	66	35	132 ... 200	15300	19100	36800	48400	10600	21000
	307R2	**23.5**	64	7970	57	35	132 ... 200	16200	20200	38700	50900	11300	21000
	307R3	**31.6**	47	5570	30	22.0	71 ... 160	17900	22300	42300	55700	12400	18600
	307R3	**37.7**	40	6650	30	22.0	71 ... 160	18900	23700	44600	58700	13200	21000
	307R3	**44.6**	34	7860	30	22.0	71 ... 160	20000	25000	46900	61700	13900	21000
	307R3	**55.9**	26.8	9860	30	22.0	71 ... 160	21600	27000	50200	66000	15000	21000
	307R3	**65.0**	23.1	11000	29.1	22.0	71 ... 160	22700	28400	52500	69100	15800	21000
	307R3	**71.8**	20.9	10100	24.2	22.0	71 ... 160	23500	29300	54100	71200	16300	21000
	307R3	**78.6**	19.1	11100	24.3	22.0	71 ... 160	24200	30200	55600	73200	16800	21000
	307R3	**83.4**	18.0	10200	21.1	22.0	71 ... 160	24700	30800	56600	74500	17200	21000
	307R3	**99.0**	15.2	8580	14.9	22.0	71 ... 160	26100	32600	59600	78400	18200	21000
	307R3	**120**	12.5	8630	12.4	22.0	71 ... 160	27800	34800	63100	83000	19400	21000
	307R4	**152**	9.9	13500	15.0	15.0	71 ... 160	30000	37500	67500	88800	21000	21000
	307R4	**165**	9.1	10900	11.7	15.0	71 ... 160	30000	37500	67500	88800	21600	21000
	307R4	**191**	7.9	14000	13.0	15.0	71 ... 160	30000	37500	67500	88800	22600	21000
	307R4	**206**	7.3	14100	12.2	15.0	71 ... 160	30000	37500	67500	88800	23200	21000
	307R4	**232**	6.5	11100	8.5	15.0	71 ... 160	30000	37500	67500	88800	24200	21000
	307R4	**258**	5.8	14600	10.0	15.0	71 ... 160	30000	37500	67500	88800	25000	21000
	307R4	**284**	5.3	11300	7.0	15.0	71 ... 160	30000	37500	67500	88800	25900	21000
	307R4	**300**	5.0	14000	8.3	15.0	71 ... 160	30000	37500	67500	88800	26300	21000
	307R4	**331**	4.5	11500	6.2	15.0	71 ... 160	30400	38000	68500	90100	27200	21000
	307R4	**363**	4.1	12300	6.0	15.0	71 ... 160	30800	38500	69400	91200	28000	21000
	307R4	**413**	3.6	11900	5.1	15.0	71 ... 160	31400	39300	70700	93000	29300	21000
	307R4	**453**	3.3	13400	5.3	15.0	71 ... 160	31800	39800	71600	94200	30200	21000
	307R4	**490**	3.1	9330	3.4	15.0	71 ... 160	32200	40200	72400	95300	31000	21000
	307R4	**581**	2.6	12600	3.9	15.0	71 ... 160	33000	41200	74200	97600	32800	21000
	307R4	**690**	2.2	9800	2.5	15.0	71 ... 160	33800	42200	76000	100000	34700	21000
1000	**307R2**	**13.0**	77	5770	50	42	132 ... 200	15200	19000	36600	48100	10600	18600
	307R2	**15.5**	65	6880	50	42	132 ... 200	16100	20100	38500	50700	11200	21000
	307R2	**19.8**	50	8830	50	42	132 ... 200	17500	21900	41500	54700	12200	21000
	307R2	**23.5**	42	8290	39	42	132 ... 200	18500	23200	43700	57500	12900	21000

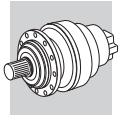

307 R

316

14000 Nm

n_1 min-1		i	n_2 min-1	M_{n2} Nm	P_{n1} kW	Pt kW	P (IEC)	Rn_2 [N] MC	MZ	HC/PC	HZ/PZ	FZ	$M_{2\,max}$ Nm
1000	**307R3**	**31.6**	32	6180	22.4	26.4	71 ... 160	20400	25600	47800	62900	14200	18600
	307R3	**37.7**	26.5	7510	22.8	26.4	71 ... 160	21700	27100	50400	66300	15100	21000
	307R3	**44.6**	22.4	8870	22.9	26.4	71 ... 160	22900	28600	53000	69700	16000	21000
	307R3	**55.9**	17.9	11100	22.9	26.4	71 ... 160	24700	30900	56700	74600	17200	21000
	307R3	**65.0**	15.4	12200	21.4	26.4	71 ... 160	26000	32500	59300	78000	18100	21000
	307R3	**71.8**	13.9	10500	16.7	26.4	71 ... 160	26900	33600	61100	80400	18700	21000
	307R3	**78.6**	12.7	11800	17.3	26.4	71 ... 160	27700	34600	62800	82600	19300	21000
	307R3	**83.4**	12.0	10600	14.6	26.4	71 ... 160	28200	35300	63900	84100	19700	21000
	307R3	**99.0**	10.1	8700	10.1	26.4	71 ... 160	29900	37400	67300	88500	20800	21000
	307R3	**120**	8.4	8700	8.3	26.4	71 ... 160	30000	37500	67500	88800	22200	21000
	307R4	**152**	6.6	14300	11.2	18.0	71 ... 160	30000	37500	67500	88800	24000	21000
	307R4	**165**	6.1	11200	8.0	18.0	71 ... 160	30000	37500	67500	88800	24700	21000
	307R4	**191**	5.2	14800	9.2	18.0	71 ... 160	30000	37500	67500	88800	25900	21000
	307R4	**206**	4.9	14900	8.6	18.0	71 ... 160	30100	37600	67800	89200	26600	21000
	307R4	**232**	4.3	11600	5.9	18.0	71 ... 160	30600	38300	69000	90700	27700	21000
	307R4	**258**	3.9	14900	6.8	18.0	71 ... 160	31100	38900	70000	92100	28600	21000
	307R4	**284**	3.5	12000	5.0	18.0	71 ... 160	31500	39400	71000	93400	29600	21000
	307R4	**300**	3.3	14000	5.5	18.0	71 ... 160	31800	39700	71500	94100	30100	21000
	307R4	**331**	3.0	12300	4.4	18.0	71 ... 160	32200	40300	72500	95400	31100	21000
	307R4	**363**	2.8	12300	4.0	18.0	71 ... 160	32700	40800	73500	96700	32100	21000
	307R4	**413**	2.4	12800	3.7	18.0	71 ... 160	33300	41600	74900	98500	33500	21000
	307R4	**453**	2.2	14000	3.6	18.0	71 ... 160	33700	42100	75900	99800	34600	21000
	307R4	**490**	2.0	9900	2.4	18.0	71 ... 160	34100	42600	76700	100900	35500	21000
	307R4	**581**	1.7	13300	2.7	18.0	71 ... 160	34900	43700	78600	103400	37600	21000
	307R4	**690**	1.4	10400	1.8	18.0	71 ... 160	35800	44800	80600	106000	39800	21000
500	**307R2**	**13.0**	39	6780	29.1	70	132 ... 200	19100	23900	45000	59200	13300	18600
	307R2	**15.5**	32	7950	28.6	70	132 ... 200	20300	25400	47500	62400	14100	21000
	307R2	**19.8**	25.2	9630	27.0	70	132 ... 200	22000	27600	51100	67300	15300	21000
	307R2	**23.5**	21.2	8480	20.1	70	132 ... 200	23300	29200	53800	70800	16200	21000
	307R3	**31.6**	15.8	7380	13.4	44	71 ... 160	25800	32200	58800	77400	17900	18600
	307R3	**37.7**	13.2	9250	14.1	44	71 ... 160	27300	34100	62000	81600	19000	21000
	307R3	**44.6**	11.2	10900	14.1	44	71 ... 160	28900	36100	65200	85800	20100	21000
	307R3	**55.9**	8.9	13500	13.9	44	71 ... 160	30000	37500	67500	88800	21700	21000
	307R3	**65.0**	7.7	13700	12.1	44	71 ... 160	30000	37500	67500	88800	22800	21000
	307R3	**71.8**	7.0	11100	8.8	44	71 ... 160	30000	37500	67500	88800	23600	21000
	307R3	**78.6**	6.4	12300	9.0	44	71 ... 160	30000	37500	67500	88800	24300	21000
	307R3	**83.4**	6.0	11200	7.7	44	71 ... 160	30000	37500	67500	88800	24800	21000
	307R3	**99.0**	5.1	8700	5.0	44	71 ... 160	30000	37500	67500	88800	26200	21000
	307R3	**120**	4.2	8930	4.3	44	71 ... 160	30800	38500	69300	91100	27900	21000
	307R4	**152**	3.3	14900	5.8	30	71 ... 160	31800	39800	71700	94300	30300	21000
	307R4	**165**	3.0	12300	4.4	30	71 ... 160	32200	40300	72500	95400	31100	21000
	307R4	**191**	2.6	14900	4.6	30	71 ... 160	32900	41100	74000	97400	32600	21000
	307R4	**206**	2.4	14900	4.3	30	71 ... 160	33300	41600	74800	98400	33500	21000
	307R4	**232**	2.2	13000	3.3	30	71 ... 160	33800	42300	76100	100200	34800	21000
	307R4	**258**	1.9	15100	3.5	30	71 ... 160	34400	42900	77300	101700	36100	21000
	307R4	**284**	1.8	13500	2.8	30	71 ... 160	34800	43500	78400	103100	37300	21000
	307R4	**300**	1.7	14400	2.8	30	71 ... 160	35100	43900	79000	103900	38000	21000
	307R4	**331**	1.5	13800	2.5	30	71 ... 160	35600	44500	80100	105400	39200	21000
	307R4	**363**	1.4	12300	2.0	30	71 ... 160	36100	45100	81100	106800	40400	21000
	307R4	**413**	1.2	14400	2.1	30	71 ... 160	36700	45900	82700	108800	42200	21000
	307R4	**453**	1.1	14900	1.9	30	71 ... 160	37200	46500	83800	110200	43500	21000
	307R4	**490**	1.0	11000	1.3	30	71 ... 160	37700	47100	84700	111400	44700	21000
	307R4	**581**	0.86	14300	1.5	30	71 ... 160	38600	48200	86800	114200	45000	21000
	307R4	**690**	0.72	11000	0.94	30	71 ... 160	39500	49400	88900	117000	45000	21000

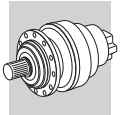

309 R

328

16460 Nm

n_1 min-1		i	n_2 min-1	M_{n2} Nm	P_{n1} kW	Pt kW	P (IEC)	Rn_2 [N] MC	MZ	HC/PC	HZ/PZ	FZ	$M_{2\,max}$ Nm
1500	**309R2**	**13.0**	116	5110	66	35	132 ... 200	—	—	33100	42600	7390	27400
	309R2	**15.5**	97	6090	66	35	132 ... 200	—	—	34900	44900	7830	27400
	309R2	**19.8**	76	7820	66	35	132 ... 200	—	—	37600	48400	8510	27400
	309R2	**23.5**	64	9280	66	35	132 ... 200	—	—	39600	50900	9010	27400
	309R3	**31.6**	47	5580	30	22.0	71 ... 160	—	—	43300	55700	9950	27900
	309R3	**37.7**	40	6650	30	22.0	71 ... 160	—	—	45600	58700	10500	29000
	309R3	**44.6**	34	7860	30	22.0	71 ... 160	—	—	47900	61700	11100	29000
	309R3	**55.9**	26.8	9860	30	22.0	71 ... 160	—	—	51300	66000	12000	29000
	309R3	**65.0**	23.1	11200	29.6	22.0	71 ... 160	—	—	53700	69100	12600	29000
	309R3	**71.8**	20.9	12700	30	22.0	71 ... 160	—	—	55300	71200	13100	29000
	309R3	**83.4**	18.0	14000	28.8	22.0	71 ... 160	—	—	57900	74500	13700	29000
	309R3	**99.0**	15.2	12800	22.2	22.0	71 ... 160	—	—	60900	78400	14500	29000
	309R3	**120**	12.5	12900	18.6	22.0	71 ... 160	—	—	64500	83000	15500	29000
	309R4	**152**	9.9	18600	15.0	15.0	71 ... 160	—	—	69000	88800	16800	29000
	309R4	**165**	9.1	16300	15.0	15.0	71 ... 160	—	—	69000	88800	17300	29000
	309R4	**191**	7.9	17300	15.0	15.0	71 ... 160	—	—	69000	88800	18100	29000
	309R4	**206**	7.3	19800	15.0	15.0	71 ... 160	—	—	69000	88800	18600	29000
	309R4	**232**	6.5	16700	12.7	15.0	71 ... 160	—	—	69000	88800	19300	29000
	309R4	**258**	5.8	17400	12.0	15.0	71 ... 160	—	—	69000	88800	20000	29000
	309R4	**284**	5.3	16900	10.5	15.0	71 ... 160	—	—	69000	88800	20700	29000
	309R4	**331**	4.5	17200	9.2	15.0	71 ... 160	—	—	70000	90100	21800	29000
	309R4	**374**	4.0	14300	6.8	15.0	71 ... 160	—	—	71200	91700	22700	29000
	309R4	**413**	3.6	17900	7.7	15.0	71 ... 160	—	—	72200	93000	23400	29000
	309R4	**457**	3.3	13800	5.4	15.0	71 ... 160	—	—	73300	94300	24200	29000
	309R4	**490**	3.1	14000	5.1	15.0	71 ... 160	—	—	74000	95300	24800	29000
	309R4	**581**	2.6	15800	4.8	15.0	71 ... 160	—	—	75800	97600	26200	29000
	309R4	**690**	2.2	14800	3.8	15.0	71 ... 160	—	—	77700	100000	27800	29000
1000	**309R2**	**13.0**	77	5770	50	42	132 ... 200	—	—	37400	48100	8450	27400
	309R2	**15.5**	65	6880	50	42	132 ... 200	—	—	39400	50700	8970	27400
	309R2	**19.8**	50	8830	50	42	132 ... 200	—	—	42500	54700	9740	27400
	309R2	**23.5**	42	10200	48	42	132 ... 200	—	—	44700	57500	10300	27400
	309R3	**31.6**	32	6300	22.9	26.4	71 ... 160	—	—	48900	62900	11400	27900
	309R3	**37.7**	26.5	7510	22.8	26.4	71 ... 160	—	—	51500	66300	12100	29000
	309R3	**44.6**	22.4	8870	22.9	26.4	71 ... 160	—	—	54100	69700	12800	29000
	309R3	**55.9**	17.9	11100	22.9	26.4	71 ... 160	—	—	58000	74600	13800	29000
	309R3	**65.0**	15.4	12500	22.0	26.4	71 ... 160	—	—	60600	78000	14500	29000
	309R3	**71.8**	13.9	14300	22.9	26.4	71 ... 160	—	—	62500	80400	15000	29000
	309R3	**83.4**	12.0	15500	21.3	26.4	71 ... 160	—	—	65300	84100	15700	29000
	309R3	**99.0**	10.1	13000	15.1	26.4	71 ... 160	—	—	68800	88500	16700	29000
	309R3	**120**	8.4	13000	12.5	26.4	71 ... 160	—	—	69000	88800	17700	29000
	309R4	**152**	6.6	20200	15.0	18.0	71 ... 160	—	—	69000	88800	19200	29000
	309R4	**165**	6.1	16700	12.0	18.0	71 ... 160	—	—	69000	88800	19800	29000
	309R4	**191**	5.2	17500	10.8	18.0	71 ... 160	—	—	69000	88800	20700	29000
	309R4	**206**	4.9	21300	12.2	18.0	71 ... 160	—	—	69300	89200	21200	29000
	309R4	**232**	4.3	17200	8.8	18.0	71 ... 160	—	—	70500	90700	22100	29000
	309R4	**258**	3.9	17500	8.0	18.0	71 ... 160	—	—	71600	92100	22900	29000
	309R4	**284**	3.5	17500	7.3	18.0	71 ... 160	—	—	72600	93400	23700	29000
	309R4	**331**	3.0	18500	6.6	18.0	71 ... 160	—	—	74200	95400	24900	29000
	309R4	**374**	2.7	14300	4.5	18.0	71 ... 160	—	—	75500	97100	25900	29000
	309R4	**413**	2.4	19200	5.5	18.0	71 ... 160	—	—	76500	98500	26800	29000
	309R4	**457**	2.2	14800	3.8	18.0	71 ... 160	—	—	77600	99900	27700	29000
	309R4	**490**	2.0	14900	3.6	18.0	71 ... 160	—	—	78400	100900	28400	29000
	309R4	**581**	1.7	15800	3.2	18.0	71 ... 160	—	—	80400	103400	30000	29000
	309R4	**690**	1.4	15900	2.7	18.0	71 ... 160	—	—	82300	106000	31800	29000
500	**309R2**	**13.0**	39	6780	29.1	70	132 ... 200	—	—	46000	59200	10700	27400
	309R2	**15.5**	32	7950	28.6	70	132 ... 200	—	—	48500	62400	11300	27400
	309R2	**19.8**	25.2	10200	28.5	70	132 ... 200	—	—	52300	67300	12300	27400
	309R2	**23.5**	21.2	11200	26.4	70	132 ... 200	—	—	55000	70800	13000	27400
	309R3	**31.6**	15.8	7760	14.1	44	71 ... 160	—	—	60100	77400	14300	27900

B

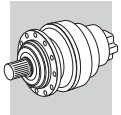

309 R — 328 — 16460 Nm

n_1 min^{-1}		i	n_2 min^{-1}	M_{n2} Nm	P_{n1} kW	Pt kW	P (IEC)	Rn_2 [N] MC	MZ	HC/PC	HZ/PZ	FZ	$M_{2\,max}$ Nm
500	**309R3**	**37.7**	13.2	9250	14.1	44	71 ... 160	—	—	63400	81600	15200	29000
	309R3	**44.6**	11.2	10900	14.1	44	71 ... 160	—	—	66700	85800	16100	29000
	309R3	**55.9**	8.9	13700	14.1	44	71 ... 160	—	—	69000	88800	17300	29000
	309R3	**65.0**	7.7	14100	12.5	44	71 ... 160	—	—	69000	88800	18200	29000
	309R3	**71.8**	7.0	16400	13.1	44	71 ... 160	—	—	69000	88800	18800	29000
	309R3	**83.4**	6.0	16700	11.5	44	71 ... 160	—	—	69000	88800	19800	29000
	309R3	**99.0**	5.1	13000	7.5	44	71 ... 160	—	—	69000	88800	21000	29000
	309R3	**120**	4.2	13400	6.4	44	71 ... 160	—	—	70800	91100	22400	29000
	309R4	**152**	3.3	21300	8.3	30	71 ... 160	—	—	73200	94300	24200	29000
	309R4	**165**	3.0	18400	6.6	30	71 ... 160	—	—	74100	95400	24900	29000
	309R4	**191**	2.6	17500	5.4	30	71 ... 160	—	—	75700	97400	26100	29000
	309R4	**206**	2.4	21300	6.1	30	71 ... 160	—	—	76500	98400	26800	29000
	309R4	**232**	2.2	18100	4.6	30	71 ... 160	—	—	77800	100200	27900	29000
	309R4	**258**	1.9	17800	4.1	30	71 ... 160	—	—	79000	101700	28900	29000
	309R4	**284**	1.8	18200	3.8	30	71 ... 160	—	—	80100	103100	29800	29000
	309R4	**331**	1.5	20600	3.7	30	71 ... 160	—	—	81900	105400	31400	29000
	309R4	**374**	1.3	14600	2.3	30	71 ... 160	—	—	83300	107200	32700	29000
	309R4	**413**	1.2	21300	3.1	30	71 ... 160	—	—	84500	108800	33800	29000
	309R4	**457**	1.1	16700	2.2	30	71 ... 160	—	—	85700	110300	34900	29000
	309R4	**490**	1.0	16900	2.0	30	71 ... 160	—	—	86600	111400	35800	29000
	309R4	**581**	0.86	15800	1.6	30	71 ... 160	—	—	88700	114200	36000	29000
	309R4	**690**	0.72	17000	1.5	30	71 ... 160	—	—	90900	117000	36000	29000

310M R — 340 — 33640 Nm

n_1 min^{-1}		i	n_2 min^{-1}	M_{n2} Nm	P_{n1} kW	Pt kW	P (IEC)	Rn_2 [N] MC	MZ	HC/PC	HZ/PZ	FZ	$M_{2\,max}$ Nm
1500	**310MR2B**	**12.0**	125	11900	130	55	160 ... 225	—	—	36600	46400	13000	47600
	310MR2B	**15.4**	97	15200	130	55	160 ... 225	—	—	39400	50000	14100	47600
	310MR2B	**18.3**	82	17000	130	55	160 ... 225	—	—	41500	52600	15000	47600
	310MR2C	**16.6**	90	15000	130	55	160 ... 250	—	—	40300	51100	14500	47600
	310MR2C	**21.3**	70	18700	130	55	160 ... 250	—	—	43500	55100	15800	47600
	310MR2C	**25.3**	59	17500	115	55	160 ... 250	—	—	45800	58000	16700	47600
	310MR3	**37.7**	40	6480	29.6	22.0	71 ... 160	—	—	51600	65400	19000	47600
	310MR3	**44.6**	34	7650	29.5	22.0	71 ... 160	—	—	54200	68700	20100	47600
	310MR3	**55.9**	26.8	9600	29.5	22.0	71 ... 160	—	—	58000	73600	21700	47600
	310MR3	**65.0**	23.1	11200	29.5	22.0	71 ... 160	—	—	60700	77000	22800	47600
	310MR3	**71.8**	20.9	12300	29.5	22.0	71 ... 160	—	—	62500	79300	23600	47600
	310MR3	**78.6**	19.1	13500	29.6	22.0	71 ... 160	—	—	64300	81500	24300	47600
	310MR3	**83.4**	18.0	14300	29.6	22.0	71 ... 160	—	—	65400	82900	24800	47600
	310MR3	**99.0**	15.2	16000	27.9	22.0	71 ... 160	—	—	68900	87300	26300	47600
	310MR3	**120**	12.5	17100	24.6	22.0	71 ... 160	—	—	72900	92400	28000	47600
	310MR4	**136**	11.0	22600	29.5	15.0	71 ... 160	—	—	75700	96000	29200	47600
	310MR4	**160**	9.4	26100	28.8	15.0	71 ... 160	—	—	78000	98900	30900	47600
	310MR4	**189**	7.9	27400	25.7	15.0	71 ... 160	—	—	78000	98900	32600	47600
	310MR4	**206**	7.3	22100	19.1	15.0	71 ... 160	—	—	78000	98900	33500	47600
	310MR4	**238**	6.3	28400	21.2	15.0	71 ... 160	—	—	78000	98900	35200	47600
	310MR4	**258**	5.8	22500	15.4	15.0	71 ... 160	—	—	78000	98900	36200	47600
	310MR4	**276**	5.4	27900	17.9	15.0	71 ... 160	—	—	78000	98900	37000	47600
	310MR4	**305**	4.9	22800	13.2	15.0	71 ... 160	—	—	78200	99100	38200	47600
	310MR4	**347**	4.3	29600	15.2	15.0	71 ... 160	—	—	79600	101000	39900	47600
	310MR4	**383**	3.9	23700	11.0	15.0	71 ... 160	—	—	80800	102400	41200	47600
	310MR4	**454**	3.3	19400	7.6	15.0	71 ... 160	—	—	82800	104900	43600	47600
	310MR4	**517**	2.9	25000	8.6	15.0	71 ... 160	—	—	84300	106900	45600	47600
	310MR4	**590**	2.5	19300	5.8	15.0	71 ... 160	—	—	85900	108900	47600	47600
	310MR4	**639**	2.3	20600	5.7	15.0	71 ... 160	—	—	86900	110200	48900	47600
	310MR4	**757**	2.0	24800	5.8	15.0	71 ... 160	—	—	89000	112900	51700	47600
	310MR4	**898**	1.7	21900	4.3	15.0	71 ... 160	—	—	91200	115700	54800	47600

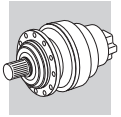

310M R

340

33640 Nm

n_1 min^{-1}		i	n_2 min^{-1}	M_{n2} Nm	P_{n1} kW	Pt kW	P (IEC)	Rn_2 [N] MC	MZ	HC/PC	HZ/PZ	FZ	$M_{2\,max}$ Nm
1000	**310MR2B**	**12.0**	83	13400	124	66	160 ... 225	—	—	41300	52400	14900	47600
	310MR2B	**15.4**	65	17200	124	66	160 ... 225	—	—	44500	56400	16200	47600
	310MR2B	**18.3**	55	17700	107	66	160 ... 225	—	—	46900	59400	17100	47600
	310MR2C	**16.6**	60	16900	113	66	160 ... 250	—	—	45500	57700	16600	47600
	310MR2C	**21.3**	47	20700	108	66	160 ... 250	—	—	49100	62200	18000	47600
	310MR2C	**25.3**	39	17800	78	66	160 ... 250	—	—	51700	65500	19100	47600
	310MR3	**37.7**	26.5	7320	22.2	26.4	71 ... 160	—	—	58200	73800	21800	47600
	310MR3	**44.6**	22.4	8640	22.2	26.4	71 ... 160	—	—	61200	77600	23000	47600
	310MR3	**55.9**	17.9	10800	22.2	26.4	71 ... 160	—	—	65500	83100	24900	47600
	310MR3	**65.0**	15.4	12600	22.2	26.4	71 ... 160	—	—	68500	86900	26100	47600
	310MR3	**71.8**	13.9	13900	22.2	26.4	71 ... 160	—	—	70600	89500	27000	47600
	310MR3	**78.6**	12.7	15200	22.3	26.4	71 ... 160	—	—	72600	92000	27800	47600
	310MR3	**83.4**	12.0	16200	22.2	26.4	71 ... 160	—	—	73900	93700	28400	47600
	310MR3	**99.0**	10.1	17800	20.6	26.4	71 ... 160	—	—	77800	98600	30100	47600
	310MR3	**120**	8.4	17900	17.1	26.4	71 ... 160	—	—	78000	98900	32000	47600
	310MR4	**136**	7.4	25600	22.2	18.0	71 ... 160	—	—	78000	98900	33400	47600
	310MR4	**160**	6.2	28200	20.8	18.0	71 ... 160	—	—	78000	98900	35300	47600
	310MR4	**189**	5.3	29100	18.2	18.0	71 ... 160	—	—	78000	98900	37300	47600
	310MR4	**206**	4.9	22800	13.1	18.0	71 ... 160	—	—	78300	99300	38400	47600
	310MR4	**238**	4.2	30000	14.9	18.0	71 ... 160	—	—	79900	101400	40300	47600
	310MR4	**258**	3.9	23700	10.9	18.0	71 ... 160	—	—	80900	102600	41400	47600
	310MR4	**276**	3.6	28100	12.0	18.0	71 ... 160	—	—	81700	103600	42300	47600
	310MR4	**305**	3.3	24400	9.5	18.0	71 ... 160	—	—	82800	105000	43800	47600
	310MR4	**347**	2.9	30400	10.4	18.0	71 ... 160	—	—	84400	107000	45700	47600
	310MR4	**383**	2.6	25400	7.9	18.0	71 ... 160	—	—	85600	108500	47200	47600
	310MR4	**454**	2.2	20800	5.4	18.0	71 ... 160	—	—	87700	111200	50000	47600
	310MR4	**517**	1.9	26800	6.1	18.0	71 ... 160	—	—	89300	113300	52200	47600
	310MR4	**590**	1.7	19400	3.9	18.0	71 ... 160	—	—	91000	115400	54500	47600
	310MR4	**639**	1.6	22100	4.1	18.0	71 ... 160	—	—	92100	116700	56000	47600
	310MR4	**757**	1.3	24800	3.9	18.0	71 ... 160	—	—	94300	119600	59200	47600
	310MR4	**898**	1.1	23500	3.1	18.0	71 ... 160	—	—	96700	122600	62700	47600
500	**310MR2B**	**12.0**	42	16400	76	110	160 ... 225	—	—	50900	64500	18800	47600
	310MR2B	**15.4**	32	19400	70	110	160 ... 225	—	—	54800	69500	20400	47600
	310MR2B	**18.3**	27.3	17800	54	110	160 ... 225	—	—	57700	73200	21600	47600
	310MR2C	**16.6**	30	20200	68	110	160 ... 250	—	—	56100	71100	20900	47600
	310MR2C	**21.3**	23.4	21200	55	110	160 ... 250	—	—	60400	76600	22700	47600
	310MR2C	**25.3**	19.7	17800	39	110	160 ... 250	—	—	63600	80700	24100	47600
	310MR3	**37.7**	13.2	9010	13.7	44	71 ... 160	—	—	71700	90900	27500	47600
	310MR3	**44.6**	11.2	10600	13.7	44	71 ... 160	—	—	75300	95500	29000	47600
	310MR3	**55.9**	8.9	13300	13.7	44	71 ... 160	—	—	78000	98900	31300	47600
	310MR3	**65.0**	7.7	15500	13.7	44	71 ... 160	—	—	78000	98900	32900	47600
	310MR3	**71.8**	7.0	17100	13.7	44	71 ... 160	—	—	78000	98900	34000	47600
	310MR3	**78.6**	6.4	18300	13.3	44	71 ... 160	—	—	78000	98900	35100	47600
	310MR3	**83.4**	6.0	19900	13.7	44	71 ... 160	—	—	78000	98900	35800	47600
	310MR3	**99.0**	5.1	18000	10.4	44	71 ... 160	—	—	78000	98900	37900	47600
	310MR3	**120**	4.2	18600	8.9	44	71 ... 160	—	—	80000	101500	40400	47600
	310MR4	**136**	3.7	29600	12.9	30	71 ... 160	—	—	81500	103300	42100	47600
	310MR4	**160**	3.1	31100	11.5	30	71 ... 160	—	—	83400	105800	44500	47600
	310MR4	**189**	2.6	31700	9.9	30	71 ... 160	—	—	85400	108300	47000	47600
	310MR4	**206**	2.4	25800	7.4	30	71 ... 160	—	—	86500	109600	48400	47600
	310MR4	**238**	2.1	32200	8.0	30	71 ... 160	—	—	88300	111900	50700	47600
	310MR4	**258**	1.9	26800	6.1	30	71 ... 160	—	—	89300	113300	52200	47600
	310MR4	**276**	1.8	28100	6.0	30	71 ... 160	—	—	90200	114300	53300	47600
	310MR4	**305**	1.6	27600	5.4	30	71 ... 160	—	—	91500	116000	55100	47600
	310MR4	**347**	1.4	32100	5.5	30	71 ... 160	—	—	93200	118100	57500	47600
	310MR4	**383**	1.3	28700	4.4	30	71 ... 160	—	—	94500	119800	59500	47600
	310MR4	**454**	1.1	23500	3.1	30	71 ... 160	—	—	96800	122800	62900	47600
	310MR4	**517**	0.97	30100	3.4	30	71 ... 160	—	—	98600	125100	65000	47600
	310MR4	**590**	0.85	19500	2.0	30	71 ... 160	—	—	100500	127400	65000	47600
	310MR4	**639**	0.78	23900	2.2	30	71 ... 160	—	—	101700	128900	65000	47600
	310MR4	**757**	0.66	24800	1.9	30	71 ... 160	—	—	104100	132100	65000	47600
	310MR4	**898**	0.56	23900	1.6	30	71 ... 160	—	—	106700	135300	65000	47600

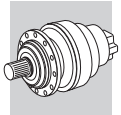

311M R

352

49210 Nm

n_1 min^{-1}		i	n_2 min^{-1}	M_{n2} Nm	P_{n1} kW	Pt kW	P (IEC)	Rn_2 [N] MC	MZ	HC/PC	HZ/PZ	FZ	$M_{2\,max}$ Nm
1500	**311MR2B**	**12.0**	125	11900	150	75	180 ... 250	—	—	46000	58600	13000	58300
	311MR2B	**15.4**	97	15200	150	75	180 ... 250	—	—	49500	63200	14100	58300
	311MR2B	**18.3**	82	18100	150	75	180 ... 250	—	—	52100	66500	15000	58300
	311MR2C	**16.6**	90	15000	150	90	180 ... 250	—	—	50700	64600	14500	58300
	311MR2C	**21.3**	70	19200	150	90	180 ... 250	—	—	54600	69600	15800	58300
	311MR2C	**25.3**	59	22800	150	90	180 ... 250	—	—	57500	73300	16700	58300
	311MR3	**53.0**	28.3	20300	66	40	132 ... 200	—	—	71700	91500	21300	58300
	311MR3	**63.2**	23.7	24200	66	40	132 ... 200	—	—	75600	96500	22600	58300
	311MR3	**68.0**	22.1	26000	66	40	132 ... 200	—	—	77300	98600	23200	58300
	311MR3	**81.1**	18.5	29800	63	40	132 ... 200	—	—	81500	100000	24600	58300
	311MR3	**96.3**	15.6	29600	53	40	132 ... 200	—	—	85800	100000	26000	58300
	311MR3	**104**	14.4	33100	55	40	132 ... 200	—	—	87800	100000	26700	58300
	311MR3	**124**	12.1	34200	48	40	132 ... 200	—	—	92500	100000	28300	58300
	311MR3	**147**	10.2	27200	32	40	132 ... 200	—	—	97300	100000	29900	58300
	311MR4	**154**	9.7	25700	29.5	22.0	71 ... 160	—	—	98000	100000	30500	58300
	311MR4	**182**	8.2	30400	29.5	22.0	71 ... 160	—	—	98000	100000	32200	58300
	311MR4	**198**	7.6	32800	29.3	22.0	71 ... 160	—	—	98000	100000	33100	58300
	311MR4	**229**	6.6	38100	29.6	22.0	71 ... 160	—	—	98000	100000	34700	58300
	311MR4	**266**	5.6	43900	29.3	22.0	71 ... 160	—	—	98000	100000	36500	58300
	311MR4	**294**	5.1	36600	22.1	22.0	71 ... 160	—	—	98000	100000	37700	58300
	311MR4	**341**	4.4	37500	19.5	22.0	71 ... 160	—	—	99800	101900	39700	58300
	311MR4	**413**	3.6	38800	16.7	22.0	71 ... 160	—	—	102600	104700	42300	58300
	311MR4	**438**	3.4	39200	15.9	22.0	71 ... 160	—	—	103400	105600	43100	58300
	311MR4	**490**	3.1	32000	11.6	22.0	71 ... 160	—	—	105100	107300	44800	58300
	311MR4	**520**	2.9	40200	13.7	22.0	71 ... 160	—	—	106000	108200	45700	58300
	311MR4	**629**	2.4	41200	11.6	22.0	71 ... 160	—	—	108900	111100	48600	58300
	311MR4	**746**	2.0	32300	7.7	22.0	71 ... 160	—	—	111600	113900	51500	58300
1000	**311MR2B**	**12.0**	83	13400	124	90	180 ... 250	—	—	51900	66200	14900	58300
	311MR2B	**15.4**	65	17200	124	90	180 ... 250	—	—	55900	71300	16200	58300
	311MR2B	**18.3**	55	20400	124	90	180 ... 250	—	—	58900	75100	17100	58300
	311MR2C	**16.6**	60	16900	113	108	180 ... 250	—	—	57200	73000	16600	58300
	311MR2C	**21.3**	47	21700	113	108	180 ... 250	—	—	61700	78700	18000	58300
	311MR2C	**25.3**	39	24400	107	108	180 ... 250	—	—	64900	82800	19100	58300
	311MR3	**53.0**	18.9	22900	50	48	132 ... 200	—	—	81000	100000	24400	58300
	311MR3	**63.2**	15.8	27300	50	48	132 ... 200	—	—	85400	100000	25900	58300
	311MR3	**68.0**	14.7	29400	50	48	132 ... 200	—	—	87300	100000	26500	58300
	311MR3	**81.1**	12.3	33200	47	48	132 ... 200	—	—	92000	100000	28100	58300
	311MR3	**96.3**	10.4	31800	38	48	132 ... 200	—	—	96900	100000	29800	58300
	311MR3	**104**	9.6	35100	39	48	132 ... 200	—	—	98000	100000	30600	58300
	311MR3	**124**	8.1	35500	33	48	132 ... 200	—	—	98000	100000	32400	58300
	311MR3	**147**	6.8	27300	21.4	48	132 ... 200	—	—	98000	100000	34300	58300
	311MR4	**154**	6.5	29000	22.2	26.4	71 ... 160	—	—	98000	100000	34900	58300
	311MR4	**182**	5.5	34300	22.2	26.4	71 ... 160	—	—	98000	100000	36900	58300
	311MR4	**198**	5.0	36600	21.8	26.4	71 ... 160	—	—	98000	100000	37900	58300
	311MR4	**229**	4.4	42300	21.9	26.4	71 ... 160	—	—	99900	101900	39800	58300
	311MR4	**266**	3.8	45900	20.4	26.4	71 ... 160	—	—	102100	104200	41800	58300
	311MR4	**294**	3.4	39200	15.8	26.4	71 ... 160	—	—	103500	105600	43200	58300
	311MR4	**341**	2.9	40300	14.0	26.4	71 ... 160	—	—	105800	107900	45400	58300
	311MR4	**413**	2.4	41600	11.9	26.4	71 ... 160	—	—	108700	110900	48400	58300
	311MR4	**438**	2.3	42000	11.3	26.4	71 ... 160	—	—	109600	111800	49400	58300
	311MR4	**490**	2.0	32300	7.8	26.4	71 ... 160	—	—	111400	113700	51200	58300
	311MR4	**520**	1.9	41200	9.4	26.4	71 ... 160	—	—	112300	114600	52300	58300
	311MR4	**629**	1.6	41200	7.8	26.4	71 ... 160	—	—	115400	117800	55700	58300
	311MR4	**746**	1.3	34600	5.5	26.4	71 ... 160	—	—	118300	120700	59000	58300
500	**311MR2B**	**12.0**	42	16400	76	150	180 ... 250	—	—	63900	81500	18800	58300
	311MR2B	**15.4**	32	21200	76	150	180 ... 250	—	—	68900	87800	20400	58300
	311MR2B	**18.3**	27.3	23100	70	150	180 ... 250	—	—	72500	92500	21600	58300
	311MR2C	**16.6**	30	20800	70	180	180 ... 250	—	—	70400	89900	20900	58300
	311MR2C	**21.3**	23.4	26700	70	180	180 ... 250	—	—	75900	96800	22700	58300
	311MR2C	**25.3**	19.7	25800	57	180	180 ... 250	—	—	79900	100000	24100	58300

B

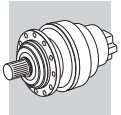

311M R

352

49210 Nm

n_1 min^{-1}		i	n_2 min^{-1}	M_{n2} Nm	P_{n1} kW	Pt kW	P (IEC)	Rn_2 [N] MC	MZ	HC/PC	HZ/PZ	FZ	$M_{2\,max}$ Nm
500	**311MR3**	**53.0**	9.4	28100	30	80	132 ... 200	—	—	98000	100000	30800	58300
	311MR3	**63.2**	7.9	33600	31	80	132 ... 200	—	—	98000	100000	32600	58300
	311MR3	**68.0**	7.4	34600	29.2	80	132 ... 200	—	—	98000	100000	33400	58300
	311MR3	**81.1**	6.2	36200	25.6	80	132 ... 200	—	—	98000	100000	35500	58300
	311MR3	**96.3**	5.2	32000	19.1	80	132 ... 200	—	—	98000	100000	37500	58300
	311MR3	**104**	4.8	36900	20.4	80	132 ... 200	—	—	98600	100600	38500	58300
	311MR3	**124**	4.0	38000	17.6	80	132 ... 200	—	—	101000	103100	40800	58300
	311MR3	**147**	3.4	29400	11.5	80	132 ... 200	—	—	103500	105600	43200	58300
	311MR4	**154**	3.2	35800	13.7	44	71 ... 160	—	—	104300	106400	43900	58300
	311MR4	**182**	2.7	42200	13.7	44	71 ... 160	—	—	106800	109000	46400	58300
	311MR4	**198**	2.5	41300	12.3	44	71 ... 160	—	—	108100	110300	47700	58300
	311MR4	**229**	2.2	47000	12.1	44	71 ... 160	—	—	110300	112500	50100	58300
	311MR4	**266**	1.9	47400	10.5	44	71 ... 160	—	—	112700	115000	52700	58300
	311MR4	**294**	1.7	44000	8.9	44	71 ... 160	—	—	114300	116600	54400	58300
	311MR4	**341**	1.5	45000	7.8	44	71 ... 160	—	—	116800	119200	57200	58300
	311MR4	**413**	1.2	46400	6.6	44	71 ... 160	—	—	120000	122400	61000	58300
	311MR4	**438**	1.1	46800	6.3	44	71 ... 160	—	—	121000	123500	62200	58300
	311MR4	**490**	1.0	33500	4.0	44	71 ... 160	—	—	123000	125500	64600	58300
	311MR4	**520**	0.96	41300	4.7	44	71 ... 160	—	—	124000	126500	65000	58300
	311MR4	**629**	0.80	41300	3.9	44	71 ... 160	—	—	127400	130000	65000	58300
	311MR4	**746**	0.67	36500	2.9	44	71 ... 160	—	—	130600	133300	65000	58300

313M R

364

60940 Nm

n_1 min^{-1}		i	n_2 min^{-1}	M_{n2} Nm	P_{n1} kW	Pt kW	P (IEC)	Rn_2 [N] MC	MZ	HC/PC	HZ/PZ	FZ	$M_{2\,max}$ Nm
1500	**313MR2B**	**12.2**	123	12000	150	75	180 ... 250	—	—	66800	78300	16100	86300
	313MR2B	**15.9**	95	15700	150	75	180 ... 250	—	—	72400	84800	17600	86300
	313MR2B	**19.1**	79	18800	150	75	180 ... 250	—	—	76500	89700	18700	86300
	313MR2C	**16.8**	89	15200	150	90	180 ... 250	—	—	73700	86400	17900	105000
	313MR2C	**22.0**	68	19800	150	90	180 ... 250	—	—	79800	93500	19600	105000
	313MR2C	**26.4**	57	23800	150	90	180 ... 250	—	—	84400	98800	20800	105000
	313MR3	**53.7**	28.0	20500	66	40	132 ... 200	—	—	104300	122200	26400	105000
	313MR3	**64.0**	23.4	24500	66	40	132 ... 200	—	—	110000	128900	28000	105000
	313MR3	**69.9**	21.4	26700	66	40	132 ... 200	—	—	112900	132400	28800	105000
	313MR3	**82.2**	18.3	31400	66	40	132 ... 200	—	—	118500	138900	30400	105000
	313MR3	**97.5**	15.4	37300	66	40	132 ... 200	—	—	124800	146200	32200	105000
	313MR3	**107**	14.0	38200	61	40	132 ... 200	—	—	128400	150400	33200	105000
	313MR3	**127**	11.8	40300	55	40	132 ... 200	—	—	135100	158300	35100	105000
	313MR3	**153**	9.8	30200	34	40	132 ... 200	—	—	142000	166400	37400	105000
	313MR4	**185**	8.1	30700	29.6	22	71 ... 160	—	—	142000	166400	39800	105000
	313MR4	**201**	7.5	33400	29.6	22	71 ... 160	—	—	142000	166400	40900	105000
	313MR4	**237**	6.3	39500	29.6	22	71 ... 160	—	—	142000	166400	43200	105000
	313MR4	**281**	5.3	46800	29.6	22	71 ... 160	—	—	142000	166400	45800	105000
	313MR4	**309**	4.9	43400	24.9	22	71 ... 160	—	—	142600	167100	47200	105000
	313MR4	**346**	4.3	55700	28.6	22	71 ... 160	—	—	144900	169800	49000	105000
	313MR4	**387**	3.9	45100	20.7	22	71 ... 160	—	—	147300	172600	50900	105000
	313MR4	**450**	3.3	46300	18.2	22	71 ... 160	—	—	150500	176300	53600	105000
	313MR4	**496**	3.0	48600	17.4	22	71 ... 160	—	—	152600	178800	55300	105000
	313MR4	**535**	2.8	47700	15.8	22	71 ... 160	—	—	154200	180700	56700	105000
	313MR4	**647**	2.3	49300	13.5	22	71 ... 160	—	—	158500	185700	60400	105000
	313MR4	**778**	1.9	35800	8.1	22	71 ... 160	—	—	162700	190700	64300	105000
1000	**313MR2B**	**12.2**	82	13600	124	90	180 ... 250	—	—	75500	88500	18400	86300
	313MR2B	**15.9**	63	17700	124	90	180 ... 250	—	—	81700	95800	20100	86300
	313MR2B	**19.1**	52	21300	124	90	180 ... 250	—	—	86400	101300	21400	86300
	313MR2C	**16.8**	59	17100	113	108	180 ... 250	—	—	83200	97500	20500	105000
	313MR2C	**22.0**	46	22300	113	108	180 ... 250	—	—	90100	105600	22400	105000
	313MR2C	**26.4**	38	25600	108	108	180 ... 250	—	—	95300	111600	23800	105000

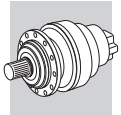

313M R — 364 — 60940 Nm

n_1 min^{-1}		i	n_2 min^{-1}	M_{n2} Nm	P_{n1} kW	Pt kW	P (IEC)	Rn_2 [N] MC	MZ	HC/PC	HZ/PZ	FZ	$M_{2\,max}$ Nm
1000	**313MR3**	**53.7**	18.6	23200	50	48	132 ... 200	—	—	117800	138100	30200	105000
	313MR3	**64.0**	15.6	27700	50	48	132 ... 200	—	—	124200	145600	32000	105000
	313MR3	**69.9**	14.3	30200	50	48	132 ... 200	—	—	127600	149500	33000	105000
	313MR3	**82.2**	12.2	35500	50	48	132 ... 200	—	—	133900	156900	34800	105000
	313MR3	**97.5**	10.3	42100	50	48	132 ... 200	—	—	140900	165100	36800	105000
	313MR3	**107**	9.3	41600	45	48	132 ... 200	—	—	142000	166400	38000	105000
	313MR3	**127**	7.9	42000	38	48	132 ... 200	—	—	142000	166400	40200	105000
	313MR3	**153**	6.5	30200	22.7	48	132 ... 200	—	—	142000	166400	42800	105000
	313MR4	**185**	5.4	34700	22.2	26.4	71 ... 160	—	—	142000	166400	45500	105000
	313MR4	**201**	5.0	37700	22.2	26.4	71 ... 160	—	—	142100	166500	46800	105000
	313MR4	**237**	4.2	44600	22.2	26.4	71 ... 160	—	—	145500	170500	49500	105000
	313MR4	**281**	3.6	48200	20.3	26.4	71 ... 160	—	—	149100	174700	52400	105000
	313MR4	**309**	3.2	46500	17.8	26.4	71 ... 160	—	—	151100	177000	54100	105000
	313MR4	**346**	2.9	57100	19.6	26.4	71 ... 160	—	—	153500	179900	56100	105000
	313MR4	**387**	2.6	48400	14.8	26.4	71 ... 160	—	—	156100	182900	58300	105000
	313MR4	**450**	2.2	49700	13.1	26.4	71 ... 160	—	—	159500	186900	61300	105000
	313MR4	**496**	2.0	49100	11.7	26.4	71 ... 160	—	—	161700	189500	63300	105000
	313MR4	**535**	1.9	51200	11.3	26.4	71 ... 160	—	—	163400	191500	64900	105000
	313MR4	**647**	1.5	53000	9.7	26.4	71 ... 160	—	—	167900	196800	69200	105000
	313MR4	**778**	1.3	38400	5.8	26.4	71 ... 160	—	—	172400	202100	73600	105000
500	**313MR2B**	**12.2**	41	16600	76	150	180 ... 250	—	—	92900	108900	23200	86300
	313MR2B	**15.9**	32	21800	76	150	180 ... 250	—	—	100600	117900	25300	86300
	313MR2B	**19.1**	26.2	24700	72	150	180 ... 250	—	—	106400	124700	26900	86300
	313MR2C	**16.8**	29.7	21100	70	180	180 ... 250	—	—	102500	120100	25800	105000
	313MR2C	**22.0**	22.8	27500	70	180	180 ... 250	—	—	110900	130000	28200	105000
	313MR2C	**26.4**	18.9	27900	59	180	180 ... 250	—	—	117300	137400	30000	105000
	313MR3	**53.7**	9.3	28500	30	80	132 ... 200	—	—	142000	166400	38000	105000
	313MR3	**64.0**	7.8	34100	31	80	132 ... 200	—	—	142000	166400	40300	105000
	313MR3	**69.9**	7.1	37200	31	80	132 ... 200	—	—	142000	166400	41500	105000
	313MR3	**82.2**	6.1	43700	31	80	132 ... 200	—	—	142000	166400	43800	105000
	313MR3	**97.5**	5.1	48400	28.5	80	132 ... 200	—	—	142000	166400	46400	105000
	313MR3	**107**	4.7	43700	23.4	80	132 ... 200	—	—	143400	168000	47900	105000
	313MR3	**127**	3.9	45000	20.3	80	132 ... 200	—	—	147000	172200	50700	105000
	313MR3	**153**	3.3	32600	12.2	80	132 ... 200	—	—	150900	176800	53900	105000
	313MR4	**185**	2.7	42700	13.7	44	71 ... 160	—	—	155000	181600	57400	105000
	313MR4	**201**	2.5	46500	13.7	44	71 ... 160	—	—	156900	183800	59000	105000
	313MR4	**237**	2.1	53700	13.4	44	71 ... 160	—	—	160600	188200	62400	105000
	313MR4	**281**	1.8	49400	10.4	44	71 ... 160	—	—	164600	192900	66000	105000
	313MR4	**309**	1.6	52500	10.1	44	71 ... 160	—	—	166800	195500	68100	105000
	313MR4	**346**	1.4	59600	10.2	44	71 ... 160	—	—	169500	198600	70700	105000
	313MR4	**387**	1.3	54600	8.3	44	71 ... 160	—	—	172300	201900	73500	105000
	313MR4	**450**	1.1	56100	7.4	44	71 ... 160	—	—	176100	206300	77300	105000
	313MR4	**496**	1.0	50800	6.1	44	71 ... 160	—	—	178500	209200	79800	105000
	313MR4	**535**	0.94	57100	6.3	44	71 ... 160	—	—	180400	211400	80000	105000
	313MR4	**647**	0.77	57100	5.2	44	71 ... 160	—	—	185400	217300	80000	105000
	313MR4	**778**	0.64	40100	3.0	44	71 ... 160	—	—	190400	223100	80000	105000

314M R — 376 — 80640 Nm

n_1 min^{-1}		i	n_2 min^{-1}	M_{n2} Nm	P_{n1} kW	Pt kW	P (IEC)	Rn_2 [N] MC	MZ	HC/PC	HZ/PZ	FZ	$M_{2\,max}$ Nm
1500	**314MR3B**	**51.1**	29.4	39100	130	55	180 ... 250	—	—	95500	114600	29200	115000
	314MR3B	**65.5**	22.9	50200	130	55	180 ... 250	—	—	103000	123500	31700	115000
	314MR3B	**77.8**	19.3	52500	116	55	180 ... 250	—	—	108400	130000	33600	115000
	314MR3B	**82.3**	18.2	54400	114	55	180 ... 250	—	—	110200	132200	34200	115000
	314MR3B	**97.6**	15.4	57300	101	55	180 ... 250	—	—	116000	139200	36200	115000
	314MR3B	**113**	13.2	47400	72	55	180 ... 250	—	—	121400	145600	38100	115000
	314MR3C	**70.7**	21.2	49400	120	55	180 ... 250	—	—	105300	126300	32500	115000

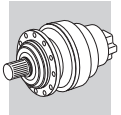

314M R	376	80640 Nm

n_1 min^{-1}		i	n_2 min^{-1}	M_{n2} Nm	P_{n1} kW	Pt kW	P (IEC)	Rn_2 [N] MC	MZ	HC/PC	HZ/PZ	FZ	$M_{2\,max}$ Nm
1500	**314MR3C**	**90.7**	16.5	61300	116	55	180 ... 250	—	—	113500	136100	35300	115000
	314MR3C	**108**	13.9	55800	89	55	180 ... 250	—	—	119500	143300	37400	115000
	314MR3C	**114**	13.2	58300	88	55	180 ... 250	—	—	121500	145700	38100	115000
	314MR3C	**135**	11.1	59100	75	55	180 ... 250	—	—	127900	153400	40300	115000
	314MR3C	**157**	9.5	47400	52	55	180 ... 250	—	—	132000	158300	42400	115000
	314MR4	**160**	9.4	26700	29.5	22.0	71 ... 160	—	—	132000	158300	42700	115000
	314MR4	**189**	7.9	31500	29.5	22.0	71 ... 160	—	—	132000	158300	45100	115000
	314MR4	**238**	6.3	39600	29.5	22.0	71 ... 160	—	—	132000	158300	48700	115000
	314MR4	**276**	5.4	46000	29.6	22.0	71 ... 160	—	—	132000	158300	51200	115000
	314MR4	**354**	4.2	59000	29.5	22.0	71 ... 160	—	—	135200	162100	55600	115000
	314MR4	**421**	3.6	68500	28.9	22.0	71 ... 160	—	—	138500	166100	58900	115000
	314MR4	**445**	3.4	59300	23.6	22.0	71 ... 160	—	—	139600	167500	60000	115000
	314MR4	**528**	2.8	65900	22.2	22.0	71 ... 160	—	—	143100	171600	63500	115000
	314MR4	**614**	2.4	54200	15.7	22.0	71 ... 160	—	—	146200	175300	66800	115000
1000	**314MR3B**	**51.1**	19.6	44200	99	66	180 ... 250	—	—	107900	129400	33400	115000
	314MR3B	**65.5**	15.3	56700	99	66	180 ... 250	—	—	116300	139500	36300	115000
	314MR3B	**77.8**	12.9	56700	84	66	180 ... 250	—	—	122400	146800	38400	115000
	314MR3B	**82.3**	12.2	57900	81	66	180 ... 250	—	—	124500	149300	39100	115000
	314MR3B	**97.6**	10.2	59600	70	66	180 ... 250	—	—	131000	157200	41400	115000
	314MR3B	**113**	8.8	47500	48	66	180 ... 250	—	—	132000	158300	43600	115000
	314MR3C	**70.7**	14.1	55800	90	66	180 ... 250	—	—	119000	142700	37200	115000
	314MR3C	**90.7**	11.0	69100	87	66	180 ... 250	—	—	128200	153800	40400	115000
	314MR3C	**108**	9.3	59500	63	66	180 ... 250	—	—	132000	158300	42800	115000
	314MR3C	**114**	8.8	60200	61	66	180 ... 250	—	—	132000	158300	43600	115000
	314MR3C	**135**	7.4	60800	52	66	180 ... 250	—	—	132000	158300	46200	115000
	314MR3C	**157**	6.4	47800	35	66	180 ... 250	—	—	132000	158300	48600	115000
	314MR4	**160**	6.2	30200	22.2	26.4	71 ... 160	—	—	132000	158300	48900	115000
	314MR4	**189**	5.3	35600	22.2	26.4	71 ... 160	—	—	132000	158300	51700	115000
	314MR4	**238**	4.2	44700	22.2	26.4	71 ... 160	—	—	135300	162200	55700	115000
	314MR4	**276**	3.6	52000	22.2	26.4	71 ... 160	—	—	138200	165800	58600	115000
	314MR4	**354**	2.8	66700	22.2	26.4	71 ... 160	—	—	143200	171800	63700	115000
	314MR4	**421**	2.4	74500	21.0	26.4	71 ... 160	—	—	146800	176000	67400	115000
	314MR4	**445**	2.2	65800	17.5	26.4	71 ... 160	—	—	148000	177500	68700	115000
	314MR4	**528**	1.9	69200	15.5	26.4	71 ... 160	—	—	151600	181800	72700	115000
	314MR4	**614**	1.6	58200	11.2	26.4	71 ... 160	—	—	154900	185800	76500	115000
500	**314MR3B**	**51.1**	9.8	54400	61	110	180 ... 250	—	—	132000	158300	42100	115000
	314MR3B	**65.5**	7.6	67400	59	110	180 ... 250	—	—	132000	158300	45700	115000
	314MR3B	**77.8**	6.4	59500	44	110	180 ... 250	—	—	132000	158300	48400	115000
	314MR3B	**82.3**	6.1	61600	43	110	180 ... 250	—	—	132000	158300	49300	115000
	314MR3B	**97.6**	5.1	62200	37	110	180 ... 250	—	—	132000	158300	52200	115000
	314MR3B	**113**	4.4	49000	24.8	110	180 ... 250	—	—	134400	161200	54900	115000
	314MR3C	**70.7**	7.1	68400	56	110	180 ... 250	—	—	132000	158300	46900	115000
	314MR3C	**90.7**	5.5	72200	46	110	180 ... 250	—	—	132000	158300	51000	115000
	314MR3C	**108**	4.6	59500	32	110	180 ... 250	—	—	133400	160000	53900	115000
	314MR3C	**114**	4.4	63200	32	110	180 ... 250	—	—	134500	161300	55000	115000
	314MR3C	**135**	3.7	64500	27.4	110	180 ... 250	—	—	137800	165300	58200	115000
	314MR3C	**157**	3.2	51800	18.9	110	180 ... 250	—	—	140800	168900	61200	115000
	314MR4	**160**	3.1	37100	13.7	44	71 ... 160	—	—	141200	169400	61600	115000
	314MR4	**189**	2.6	43800	13.7	44	71 ... 160	—	—	144600	173400	65100	115000
	314MR4	**238**	2.1	55000	13.7	44	71 ... 160	—	—	149400	179100	70200	115000
	314MR4	**276**	1.8	64000	13.7	44	71 ... 160	—	—	152600	183000	73800	115000
	314MR4	**354**	1.4	82100	13.7	44	71 ... 160	—	—	158200	189700	80300	115000
	314MR4	**421**	1.2	76700	10.8	44	71 ... 160	—	—	162100	194400	85000	115000
	314MR4	**445**	1.1	72200	9.6	44	71 ... 160	—	—	163400	195900	86600	115000
	314MR4	**528**	0.95	73300	8.2	44	71 ... 160	—	—	167400	200800	90000	115000
	314MR4	**614**	0.81	63300	6.1	44	71 ... 160	—	—	171100	205100	90000	115000

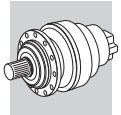

315M R

388

100800 Nm

n_1 min^{-1}		i	n_2 min^{-1}	M_{n2} Nm	P_{n1} kW	Pt kW	P (IEC)	Rn_2 [N] MC	MZ	HC/PC	HZ/PZ	FZ	$M_{2\,max}$ Nm
1500	**315MR3B**	**51.1**	29.4	48900	150	75	180 ... 250	—	—	95500	114600	29200	135000
	315MR3B	**65.5**	22.9	62700	150	75	180 ... 250	—	—	103000	123500	31700	135000
	315MR3B	**77.8**	19.3	73600	150	75	180 ... 250	—	—	108400	130000	33600	135000
	315MR3B	**82.3**	18.2	68000	142	75	180 ... 250	—	—	110200	132200	34200	135000
	315MR3B	**97.6**	15.4	72000	127	75	180 ... 250	—	—	116000	139200	36200	135000
	315MR3B	**113**	13.2	59200	90	75	180 ... 250	—	—	121400	145600	38100	135000
	315MR3C	**70.7**	21.2	61700	150	90	180 ... 250	—	—	105300	126300	32500	135000
	315MR3C	**90.7**	16.5	77300	147	90	180 ... 250	—	—	113500	136100	35300	135000
	315MR3C	**108**	13.9	83100	133	90	180 ... 250	—	—	119500	143300	37400	135000
	315MR3C	**114**	13.2	72900	110	90	180 ... 250	—	—	121500	145700	38100	135000
	315MR3C	**135**	11.1	74000	94	90	180 ... 250	—	—	127900	153400	40300	135000
	315MR3C	**157**	9.5	59300	65	90	180 ... 250	—	—	132000	158300	42400	135000
	315MR4	**225**	6.7	83600	66	40	132 ... 200	—	—	132000	158300	47800	135000
	315MR4	**269**	5.6	92800	61	40	132 ... 200	—	—	132000	158300	50700	135000
	315MR4	**345**	4.3	94600	49	40	132 ... 200	—	—	134700	161500	55100	135000
	315MR4	**409**	3.7	94600	41	40	132 ... 200	—	—	138000	165500	58400	135000
	315MR4	**525**	2.9	94600	32	40	132 ... 200	—	—	143000	171500	63400	135000
	315MR4	**623**	2.4	94900	27.0	40	132 ... 200	—	—	146500	175700	67200	135000
	315MR4	**659**	2.3	85100	22.9	40	132 ... 200	—	—	147700	177100	68400	135000
	315MR4	**782**	1.9	86400	19.6	40	132 ... 200	—	—	151400	181500	72400	135000
	315MR4	**909**	1.6	72500	14.2	40	132 ... 200	—	—	154700	185500	76200	135000
1000	**315MR3B**	**51.1**	19.6	55200	124	90	180 ... 250	—	—	107900	129400	33400	135000
	315MR3B	**65.5**	15.3	70900	124	90	180 ... 250	—	—	116300	139500	36300	135000
	315MR3B	**77.8**	12.9	82700	122	90	180 ... 250	—	—	122400	146800	38400	135000
	315MR3B	**82.3**	12.2	72400	101	90	180 ... 250	—	—	124500	149300	39100	135000
	315MR3B	**97.6**	10.2	74500	88	90	180 ... 250	—	—	131000	157200	41400	135000
	315MR3B	**113**	8.8	59400	60	90	180 ... 250	—	—	132000	158300	43600	135000
	315MR3C	**70.7**	14.1	69700	113	108	180 ... 250	—	—	119000	142700	37200	135000
	315MR3C	**90.7**	11.0	86500	109	108	180 ... 250	—	—	128200	153800	40400	135000
	315MR3C	**108**	9.3	89500	95	108	180 ... 250	—	—	132000	158300	42800	135000
	315MR3C	**114**	8.8	75200	76	108	180 ... 250	—	—	132000	158300	43600	135000
	315MR3C	**135**	7.4	76000	65	108	180 ... 250	—	—	132000	158300	46200	135000
	315MR3C	**157**	6.4	59700	44	108	180 ... 250	—	—	132000	158300	48600	135000
	315MR4	**225**	4.4	91700	48	48	132 ... 200	—	—	134300	161000	54800	135000
	315MR4	**269**	3.7	94600	42	48	132 ... 200	—	—	137700	165100	58100	135000
	315MR4	**345**	2.9	94600	32	48	132 ... 200	—	—	142700	171100	63100	135000
	315MR4	**409**	2.4	94800	27.4	48	132 ... 200	—	—	146200	175300	66800	135000
	315MR4	**525**	1.9	96400	21.7	48	132 ... 200	—	—	151500	181700	72600	135000
	315MR4	**623**	1.6	97600	18.5	48	132 ... 200	—	—	155300	186200	76900	135000
	315MR4	**659**	1.5	88300	15.8	48	132 ... 200	—	—	156500	187700	78300	135000
	315MR4	**782**	1.3	89600	13.6	48	132 ... 200	—	—	160400	192400	82900	135000
	315MR4	**909**	1.1	77800	10.1	48	132 ... 200	—	—	163900	196500	87200	135000
500	**315MR3B**	**51.1**	9.8	68000	76	150	180 ... 250	—	—	132000	158300	42100	135000
	315MR3B	**65.5**	7.6	85700	75	150	180 ... 250	—	—	132000	158300	45700	135000
	315MR3B	**77.8**	6.4	92500	68	150	180 ... 250	—	—	132000	158300	48400	135000
	315MR3B	**82.3**	6.1	77000	54	150	180 ... 250	—	—	132000	158300	49300	135000
	315MR3B	**97.6**	5.1	77800	46	150	180 ... 250	—	—	132000	158300	52200	135000
	315MR3B	**113**	4.4	61200	31	150	180 ... 250	—	—	134400	161200	54900	135000
	315MR3C	**70.7**	7.1	85600	69	180	180 ... 250	—	—	132000	158300	46900	135000
	315MR3C	**90.7**	5.5	93800	59	180	180 ... 250	—	—	132000	158300	51000	135000
	315MR3C	**108**	4.6	94600	50	180	180 ... 250	—	—	133400	160000	53900	135000
	315MR3C	**114**	4.4	79100	40	180	180 ... 250	—	—	134500	161300	55000	135000
	315MR3C	**135**	3.7	80600	34	180	180 ... 250	—	—	137800	165300	58200	135000
	315MR3C	**157**	3.2	64800	23.7	180	180 ... 250	—	—	140800	168900	61200	135000
	315MR4	**225**	2.2	95400	25.1	80	132 ... 200	—	—	148200	177800	69000	135000
	315MR4	**269**	1.9	96600	21.3	80	132 ... 200	—	—	152000	182300	73200	135000
	315MR4	**345**	1.4	98200	16.8	80	132 ... 200	—	—	157500	188900	79500	135000
	315MR4	**409**	1.2	99400	14.4	80	132 ... 200	—	—	161400	193600	84200	135000

B

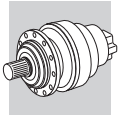

315M R

388

100800 Nm

n_1 min^{-1}		i	n_2 min^{-1}	M_{n2} Nm	P_{n1} kW	Pt kW	P (IEC)	Rn_2 [N] MC	MZ	HC/PC	HZ/PZ	FZ	$M_{2\,max}$ Nm
	315MR4	**525**	0.95	100800	11.4	80	132 ... 200	—	—	167300	200600	90000	135000
	315MR4	**623**	0.80	100800	9.6	80	132 ... 200	—	—	171400	205600	90000	135000
	315MR4	**659**	0.76	91600	8.2	80	132 ... 200	—	—	172800	207200	90000	135000
	315MR4	**782**	0.64	91600	6.9	80	132 ... 200	—	—	177100	212400	90000	135000
	315MR4	**909**	0.55	79100	5.1	80	132 ... 200	—	—	180900	217000	90000	135000

316M R

400

134390 Nm

n_1 min^{-1}		i	n_2 min^{-1}	M_{n2} Nm	P_{n1} kW	Pt kW	P (IEC)	Rn_2 [N] MC	MZ	HC/PC	HZ/PZ	FZ	$M_{2\,max}$ Nm
1500	**316MR3B**	**51.1**	29.4	48900	150	75	180 ... 250	—	—	146200	164000	48600	192000
	316MR3B	**64.1**	23.4	61400	150	75	180 ... 250	—	—	156500	175600	52400	192000
	316MR3B	**65.5**	22.9	62700	150	75	180 ... 250	—	—	157600	176800	52800	192000
	316MR3B	**77.8**	19.3	74500	150	75	180 ... 250	—	—	165900	186100	55900	192000
	316MR3B	**82.3**	18.2	78700	150	75	180 ... 250	—	—	168700	189200	57000	192000
	316MR3B	**97.6**	15.4	89000	150	75	180 ... 250	—	—	177600	199200	60300	192000
	316MR3C	**70.7**	21.2	61700	150	90	180 ... 250	—	—	161200	180800	54200	192000
	316MR3C	**88.7**	16.9	77500	150	90	180 ... 250	—	—	172600	193600	58400	192000
	316MR3C	**90.7**	16.5	79200	150	90	180 ... 250	—	—	173700	194900	58900	192000
	316MR3C	**108**	13.9	94000	150	90	180 ... 250	—	—	182900	205200	62300	192000
	316MR3C	**114**	13.2	92900	140	90	180 ... 250	—	—	186000	208600	63500	192000
	316MR3C	**135**	11.1	97700	124	90	180 ... 250	—	—	195800	219600	67200	192000
	316MR4	**225**	6.7	83600	66	45	132 ... 200	—	—	202000	226600	79700	192000
	316MR4	**269**	5.6	99700	66	45	132 ... 200	—	—	202000	226600	84600	192000
	316MR4	**289**	5.2	107200	66	45	132 ... 200	—	—	202000	226600	86600	192000
	316MR4	**337**	4.4	101400	53	45	132 ... 200	—	—	205400	230400	91200	192000
	316MR4	**363**	4.1	102600	50	45	132 ... 200	—	—	207500	232800	93400	192000
	316MR4	**430**	3.5	105500	43	45	132 ... 200	—	—	212700	238600	98900	192000
	316MR4	**443**	3.4	125100	50	45	132 ... 200	—	—	213500	239500	99900	192000
	316MR4	**525**	2.9	125700	42	45	132 ... 200	—	—	218800	245500	105700	192000
	316MR4	**623**	2.4	113800	32	45	132 ... 200	—	—	224200	251600	111900	192000
	316MR4	**659**	2.3	112400	30	45	132 ... 200	—	—	226000	253600	114000	192000
	316MR4	**782**	1.9	114300	25.9	45	132 ... 200	—	—	231600	259800	120700	192000
1000	**316MR3B**	**51.1**	19.6	55200	124	90	180 ... 250	—	—	165100	185200	55700	192000
	316MR3B	**64.1**	15.6	69300	124	90	180 ... 250	—	—	176800	198300	60000	192000
	316MR3B	**65.5**	15.3	70900	124	90	180 ... 250	—	—	178000	199600	60500	192000
	316MR3B	**77.8**	12.9	84100	124	90	180 ... 250	—	—	187300	210200	64000	192000
	316MR3B	**82.3**	12.2	88900	124	90	180 ... 250	—	—	190500	213700	65200	192000
	316MR3B	**97.6**	10.2	98900	116	90	180 ... 250	—	—	200500	225000	69100	192000
	316MR3C	**70.7**	14.1	69700	113	108	180 ... 250	—	—	182000	204200	62000	192000
	316MR3C	**88.7**	11.3	87500	113	108	180 ... 250	—	—	194900	218600	66900	192000
	316MR3C	**90.7**	11.0	89500	113	108	180 ... 250	—	—	196200	220100	67400	192000
	316MR3C	**108**	9.3	104900	112	108	180 ... 250	—	—	202000	226600	71400	192000
	316MR3C	**114**	8.8	99500	100	108	180 ... 250	—	—	202000	226600	72700	192000
	316MR3C	**135**	7.4	99500	84	108	180 ... 250	—	—	202000	226600	77000	192000
	316MR4	**225**	4.4	94400	50	54	132 ... 200	—	—	205500	230500	91300	192000
	316MR4	**269**	3.7	112300	49	54	132 ... 200	—	—	210700	236400	96800	192000
	316MR4	**289**	3.5	117500	48	54	132 ... 200	—	—	212900	238800	99200	192000
	316MR4	**337**	3.0	108300	38	54	132 ... 200	—	—	217600	244200	104400	192000
	316MR4	**363**	2.8	109600	36	54	132 ... 200	—	—	219900	246700	107000	192000
	316MR4	**430**	2.3	112100	31	54	132 ... 200	—	—	225400	252800	113300	192000
	316MR4	**443**	2.3	127000	34	54	132 ... 200	—	—	226300	253800	114300	192000
	316MR4	**525**	1.9	128600	29.0	54	132 ... 200	—	—	231900	260100	121000	192000
	316MR4	**623**	1.6	115800	22.0	54	132 ... 200	—	—	237600	266600	128100	192000
	316MR4	**659**	1.5	117100	21.0	54	132 ... 200	—	—	239500	268700	130500	192000
	316MR4	**782**	1.3	119200	18.0	54	132 ... 200	—	—	245500	275300	138200	192000
	316MR3B	**51.1**	9.8	68000	76	150	180 ... 250	—	—	202000	226600	70100	192000
	316MR3B	**64.1**	7.8	85300	76	150	180 ... 250	—	—	202000	226600	75600	192000

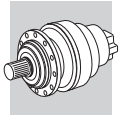

316M R — 400 — 134390 Nm

n_1 min^{-1}		i	n_2 min^{-1}	M_{n2} Nm	P_{n1} kW	Pt kW	P (IEC)	Rn_2 [N] MC	MZ	HC/PC	HZ/PZ	FZ	$M_{2\,max}$ Nm
500	**316MR3B**	**65.5**	7.6	87200	76	150	180 ... 250	—	—	202000	226600	76200	192000
	316MR3B	**77.8**	6.4	103500	76	150	180 ... 250	—	—	202000	226600	80700	192000
	316MR3B	**82.3**	6.1	98000	68	150	180 ... 250	—	—	202000	226600	82200	192000
	316MR3B	**97.6**	5.1	99500	58	150	180 ... 250	—	—	202000	226600	87000	192000
	316MR3C	**70.7**	7.1	85800	70	180	180 ... 250	—	—	202000	226600	78100	192000
	316MR3C	**88.7**	5.6	97900	63	180	180 ... 250	—	—	202000	226600	84300	192000
	316MR3C	**90.7**	5.5	110200	70	180	180 ... 250	—	—	202000	226600	84900	192000
	316MR3C	**108**	4.6	113600	61	180	180 ... 250	—	—	204100	229000	89900	192000
	316MR3C	**114**	4.4	101600	51	180	180 ... 250	—	—	205800	230800	91600	192000
	316MR3C	**135**	3.7	104500	44	180	180 ... 250	—	—	210900	236600	97000	192000
	316MR4	**225**	2.2	114300	30	90	132 ... 200	—	—	226800	254500	115000	192000
	316MR4	**269**	1.9	128800	28.3	90	132 ... 200	—	—	232600	261000	122000	192000
	316MR4	**289**	1.7	129400	26.5	90	132 ... 200	—	—	235100	263700	124900	192000
	316MR4	**337**	1.5	117400	20.6	90	132 ... 200	—	—	240300	269600	131500	192000
	316MR4	**363**	1.4	118300	19.3	90	132 ... 200	—	—	242800	272400	134800	192000
	316MR4	**430**	1.2	120300	16.5	90	132 ... 200	—	—	248800	279100	142700	192000
	316MR4	**443**	1.1	133300	17.8	90	132 ... 200	—	—	249800	280200	144000	192000
	316MR4	**525**	0.95	134400	15.1	90	132 ... 200	—	—	256000	287200	150000	192000
	316MR4	**623**	0.80	118100	11.2	90	132 ... 200	—	—	262400	294300	150000	192000
	316MR4	**659**	0.76	122200	11.0	90	132 ... 200	—	—	264400	296700	150000	192000
	316MR4	**782**	0.64	122200	9.2	90	132 ... 200	—	—	271000	304000	150000	192000

317M R — 410 — 207490 Nm

n_1 min^{-1}		i	n_2 min^{-1}	M_{n2} Nm	P_{n1} kW	Pt kW	P (IEC)	Rn_2 [N] MC	MZ	HC/PC	HZ/PZ	FZ	$M_{2\,max}$ Nm
1500	**317MR3B**	**49.8**	30	47700	150	90	180 ... 250	—	—	225800	239800	48200	393000
	317MR3B	**64.9**	23.1	62100	150	90	180 ... 250	—	—	244400	259700	52700	393000
	317MR3B	**78.1**	19.2	74800	150	90	180 ... 250	—	—	258400	274500	56000	393000
	317MR3B	**83.3**	18.0	79700	150	90	180 ... 250	—	—	263400	279900	57200	393000
	317MR3B	**100**	15.0	96000	150	90	180 ... 250	—	—	278500	295900	60900	393000
	317MR3B	**119**	12.6	106600	150	90	180 ... 250	—	—	293200	311500	64400	393000
	317MR3C	**68.9**	21.8	60200	150	100	180 ... 250	—	—	248900	264400	53700	393000
	317MR3C	**89.8**	16.7	78400	150	100	180 ... 250	—	—	269500	286300	58700	393000
	317MR3C	**108**	13.9	94400	150	100	180 ... 250	—	—	284900	302700	62400	393000
	317MR3C	**115**	13.0	100600	150	100	180 ... 250	—	—	290400	308600	63800	393000
	317MR3C	**139**	10.8	121200	150	100	180 ... 250	—	—	307100	326200	67800	393000
	317MR3C	**165**	9.1	113100	118	100	180 ... 250	—	—	314300	333900	71800	393000
	317MR4	**220**	6.8	81500	66	50	132 ... 200	—	—	314300	333900	79000	393000
	317MR4	**262**	5.7	97200	66	50	132 ... 200	—	—	314300	333900	83800	393000
	317MR4	**336**	4.5	124700	66	50	132 ... 200	—	—	319400	339400	91100	393000
	317MR4	**399**	3.8	148000	66	50	132 ... 200	—	—	327400	347800	96500	393000
	317MR4	**438**	3.4	156700	63	50	132 ... 200	—	—	331800	352500	99500	393000
	317MR4	**520**	2.9	166200	57	50	132 ... 200	—	—	340000	361200	105400	393000
	317MR4	**626**	2.4	121500	34	50	132 ... 200	—	—	349100	370900	112100	393000
	317MR4	**677**	2.2	156000	41	50	132 ... 200	—	—	353000	375100	115000	393000
	317MR4	**803**	1.9	155900	34	50	132 ... 200	—	—	361800	384300	121800	393000
	317MR4	**953**	1.6	139100	25.9	50	132 ... 200	—	—	370700	393900	129000	393000
1000	**317MR3B**	**49.8**	20.1	53800	124	108	180 ... 250	—	—	255000	270900	55200	393000
	317MR3B	**64.9**	15.4	70200	124	108	180 ... 250	—	—	276100	293300	60300	393000
	317MR3B	**78.1**	12.8	84400	124	108	180 ... 250	—	—	291800	310000	64100	393000
	317MR3B	**83.3**	12.0	90000	124	108	180 ... 250	—	—	297500	316100	65500	393000
	317MR3B	**100**	10.0	108400	124	108	180 ... 250	—	—	314300	333900	69700	393000
	317MR3B	**119**	8.4	113300	109	108	180 ... 250	—	—	314300	333900	73800	393000
	317MR3C	**68.9**	14.5	67900	113	120	180 ... 250	—	—	281100	298600	61500	393000
	317MR3C	**89.8**	11.1	88600	113	120	180 ... 250	—	—	304400	323300	67200	393000
	317MR3C	**108**	9.2	106000	112	120	180 ... 250	—	—	314300	333900	71500	393000

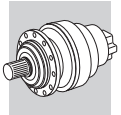

317M R — 410 — 207490 Nm

n_1 min^{-1}		i	n_2 min^{-1}	M_{n2} Nm	P_{n1} kW	Pt kW	P (IEC)	Rn_2 [N] MC	MZ	HC/PC	HZ/PZ	FZ	$M_{2\,max}$ Nm
1000	**317MR3C**	**115**	8.7	113700	113	120	180 ... 250	—	—	314300	333900	73000	393000
	317MR3C	**139**	7.2	135200	112	120	180 ... 250	—	—	314300	333900	77700	393000
	317MR3C	**165**	6.1	113800	79	120	180 ... 250	—	—	314300	333900	82200	393000
	317MR4	**220**	4.6	92000	50	60	132 ... 200	—	—	318500	338400	90500	393000
	317MR4	**262**	3.8	109800	50	60	132 ... 200	—	—	326600	347000	96000	393000
	317MR4	**336**	3.0	140900	50	60	132 ... 200	—	—	338500	359600	104300	393000
	317MR4	**399**	2.5	167200	50	60	132 ... 200	—	—	346900	368500	110400	393000
	317MR4	**438**	2.3	168200	45	60	132 ... 200	—	—	351600	373500	113900	393000
	317MR4	**520**	1.9	170500	39	60	132 ... 200	—	—	360300	382700	120600	393000
	317MR4	**626**	1.6	123500	23.3	60	132 ... 200	—	—	369900	393000	128300	393000
	317MR4	**677**	1.5	156000	27.3	60	132 ... 200	—	—	374100	397400	131700	393000
	317MR4	**803**	1.2	155900	23.0	60	132 ... 200	—	—	383400	407300	139400	393000
	317MR4	**953**	1.0	149000	18.5	60	132 ... 200	—	—	392900	417400	147600	393000
500	**317MR3B**	**49.8**	10.0	66300	76	180	180 ... 250	—	—	313900	333500	69500	393000
	317MR3B	**64.9**	7.7	86400	76	180	180 ... 250	—	—	314300	333900	75900	393000
	317MR3B	**78.1**	6.4	104000	76	180	180 ... 250	—	—	314300	333900	80800	393000
	317MR3B	**83.3**	6.0	110800	76	180	180 ... 250	—	—	314300	333900	82500	393000
	317MR3B	**100**	5.0	133400	76	180	180 ... 250	—	—	314400	334000	87800	393000
	317MR3B	**119**	4.2	117600	57	180	180 ... 250	—	—	322200	342300	92900	393000
	317MR3C	**68.9**	7.3	83600	70	200	180 ... 250	—	—	314300	333900	77500	393000
	317MR3C	**89.8**	5.6	109000	70	200	180 ... 250	—	—	314300	333900	84600	393000
	317MR3C	**108**	4.6	121300	64	200	180 ... 250	—	—	317800	337700	90000	393000
	317MR3C	**115**	4.3	139900	70	200	180 ... 250	—	—	320800	340800	92000	393000
	317MR3C	**139**	3.6	152200	63	200	180 ... 250	—	—	329400	349900	97800	393000
	317MR3C	**165**	3.0	124300	43	200	180 ... 250	—	—	337500	358600	103600	393000
	317MR4	**220**	2.3	112800	30	100	132 ... 200	—	—	351700	373600	114000	393000
	317MR4	**262**	1.9	135100	31	100	132 ... 200	—	—	360600	383100	120900	393000
	317MR4	**336**	1.5	173400	31	100	132 ... 200	—	—	373700	397000	131400	393000
	317MR4	**399**	1.3	186800	27.7	100	132 ... 200	—	—	383000	406900	139100	393000
	317MR4	**438**	1.1	177900	24.0	100	132 ... 200	—	—	388200	412400	143500	393000
	317MR4	**520**	0.96	179800	20.5	100	132 ... 200	—	—	397800	422600	150000	393000
	317MR4	**626**	0.80	125800	11.9	100	132 ... 200	—	—	408400	433900	150000	393000
	317MR4	**677**	0.74	156000	13.6	100	132 ... 200	—	—	413000	438800	150000	393000
	317MR4	**803**	0.62	155900	11.5	100	132 ... 200	—	—	423300	449700	150000	393000
	317MR4	**953**	0.52	150300	9.3	100	132 ... 200	—	—	433700	460800	150000	393000

318M R — 420 — 297550 Nm

n_1 min^{-1}		i	n_2 min^{-1}	M_{n2} Nm	P_{n1} kW	Pt kW	P (IEC)	Rn_2 [N] MC	MZ	HC/PC	HZ/PZ	FZ	$M_{2\,max}$ Nm
1500	**318MR4B**	**225**	6.7	208700	150	90	180 ... 250	—	—	299000	337600	106200	500000
	318MR4B	**288**	5.2	231100	142	90	180 ... 250	—	—	299000	337600	115400	500000
	318MR4B	**342**	4.4	237000	123	90	180 ... 250	—	—	304700	344000	122200	500000
	318MR4B	**362**	4.1	239200	117	90	180 ... 250	—	—	307100	346800	124500	500000
	318MR4B	**430**	3.5	246200	102	90	180 ... 250	—	—	314700	355400	131800	500000
	318MR4B	**499**	3.0	249400	89	90	180 ... 250	—	—	321600	363100	138600	500000
	318MR4C	**311**	4.8	233200	133	110	180 ... 250	—	—	300600	339400	118400	500000
	318MR4C	**399**	3.8	243200	108	110	180 ... 250	—	—	311500	351700	128700	500000
	318MR4C	**474**	3.2	250300	94	110	180 ... 250	—	—	319200	360400	136200	500000
	318MR4C	**501**	3.0	252700	89	110	180 ... 250	—	—	321700	363300	138800	500000
	318MR4C	**595**	2.5	260100	78	110	180 ... 250	—	—	329700	372300	146900	500000
	318MR4C	**691**	2.2	257500	66	110	180 ... 250	—	—	336900	380400	154500	500000
1000	**318MR4B**	**225**	4.5	232800	123	108	180 ... 250	—	—	304000	343300	121600	500000
	318MR4B	**288**	3.5	246500	101	108	180 ... 250	—	—	315000	355700	132100	500000
	318MR4B	**342**	2.9	253800	88	108	180 ... 250	—	—	322900	364500	139900	500000
	318MR4B	**362**	2.8	256200	84	108	180 ... 250	—	—	325400	367400	142500	500000
	318MR4B	**430**	2.3	263200	72	108	180 ... 250	—	—	333500	376500	150900	500000

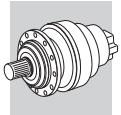

318M R

420

297550 Nm

n_1 min^{-1}		i	n_2 min^{-1}	M_{n2} Nm	P_{n1} kW	Pt kW	P (IEC)	Rn_2 [N] MC	MZ	HC/PC	HZ/PZ	FZ	$M_{2\,max}$ Nm
1000	**318MR4B**	**499**	2.0	258200	61	108	180 ... 250	—	—	340700	384700	158700	500000
	318MR4C	**311**	3.2	249700	95	132	180 ... 250	—	—	318500	359600	135500	500000
	318MR4C	**399**	2.5	260500	77	132	180 ... 250	—	—	330000	372600	147300	500000
	318MR4C	**474**	2.1	267000	67	132	180 ... 250	—	—	338200	381900	155900	500000
	318MR4C	**501**	2.0	269200	64	132	180 ... 250	—	—	340900	384900	158800	500000
	318MR4C	**595**	1.7	276000	55	132	180 ... 250	—	—	349400	394500	168200	500000
	318MR4C	**691**	1.4	261200	45	132	180 ... 250	—	—	357000	403000	176800	500000
500	**318MR4B**	**225**	2.2	265000	70	180	180 ... 250	—	—	335700	379000	153200	500000
	318MR4B	**288**	1.7	274700	56	180	180 ... 250	—	—	347800	392700	166500	500000
	318MR4B	**342**	1.5	281600	49	180	180 ... 250	—	—	356500	402500	176300	500000
	318MR4B	**362**	1.4	283900	46	180	180 ... 250	—	—	359300	405700	179600	500000
	318MR4B	**430**	1.2	291100	40	180	180 ... 250	—	—	368200	415700	190100	500000
	318MR4B	**499**	1.0	264700	31	180	180 ... 250	—	—	376200	424800	199900	500000
	318MR4C	**311**	1.6	277800	53	220	180 ... 250	—	—	351600	397000	170700	500000
	318MR4C	**399**	1.3	288000	43	220	180 ... 250	—	—	364400	411400	185500	500000
	318MR4C	**474**	1.1	295200	37	220	180 ... 250	—	—	373400	421600	196400	500000
	318MR4C	**501**	1.0	297600	35	220	180 ... 250	—	—	376400	425000	200000	500000
	318MR4C	**595**	0.84	297600	29.6	220	180 ... 250	—	—	385700	435500	200000	500000
	318MR4C	**691**	0.72	264700	22.6	220	180 ... 250	—	—	394100	445000	200000	500000

319 R

430

471190 Nm

n_1 min^{-1}		i	n_2 min^{-1}	M_{n2} Nm	P_{n1} kW	Pt kW	P (IEC)	Rn_2 [N] MC	MZ	HC/PC	HZ/PZ	FZ	$M_{2\,max}$ Nm
1500	**319R4B**	**249**	6.0	231200	150	95	180 ... 250	—	—	363300	400000	109900	680000
	319R4B	**320**	4.7	296700	150	95	180 ... 250	—	—	366600	403600	119400	680000
	319R4B	**379**	4.0	334500	150	95	180 ... 250	—	—	375700	413600	126500	680000
	319R4B	**401**	3.7	340200	150	95	180 ... 250	—	—	378700	416900	128800	680000
	319R4B	**475**	3.2	294100	110	95	180 ... 250	—	—	387900	427100	136300	680000
	319R4B	**563**	2.7	302600	95	95	180 ... 250	—	—	397500	437700	144300	680000
	319R4B	**655**	2.3	308600	84	95	180 ... 250	—	—	406100	447200	151700	680000
	319R4C	**345**	4.4	291900	150	115	180 ... 250	—	—	370600	408000	122500	680000
	319R4C	**442**	3.4	350400	141	115	180 ... 250	—	—	384000	422800	133100	680000
	319R4C	**525**	2.9	368800	125	115	180 ... 250	—	—	393500	433300	140900	680000
	319R4C	**555**	2.7	375000	120	115	180 ... 250	—	—	396700	436800	143600	680000
	319R4C	**657**	2.3	310500	84	115	180 ... 250	—	—	406300	447400	151900	680000
	319R4C	**780**	1.9	319500	73	115	180 ... 250	—	—	416400	458500	160800	680000
	319R4C	**906**	1.7	319200	62	115	180 ... 250	—	—	425500	468400	169100	680000
1000	**319R4B**	**249**	4.0	261100	124	114	180 ... 250	—	—	374800	412700	125800	680000
	319R4B	**320**	3.1	335100	124	114	180 ... 250	—	—	388400	427700	136700	680000
	319R4B	**379**	2.6	377800	118	114	180 ... 250	—	—	398100	438300	144800	680000
	319R4B	**401**	2.5	384100	113	114	180 ... 250	—	—	401300	441800	147500	680000
	319R4B	**475**	2.1	314600	78	114	180 ... 250	—	—	411000	452500	156000	680000
	319R4B	**563**	1.8	323800	68	114	180 ... 250	—	—	421200	463800	165200	680000
	319R4B	**655**	1.5	321900	58	114	180 ... 250	—	—	430400	473800	173700	680000
	319R4C	**345**	2.9	329600	113	138	180 ... 250	—	—	392700	432300	140200	680000
	319R4C	**442**	2.3	392600	105	138	180 ... 250	—	—	406900	448000	152400	680000
	319R4C	**525**	1.9	400600	90	138	180 ... 250	—	—	417000	459100	161300	680000
	319R4C	**555**	1.8	413100	88	138	180 ... 250	—	—	420300	462800	164400	680000
	319R4C	**657**	1.5	332200	60	138	180 ... 250	—	—	430600	474100	173900	680000
	319R4C	**780**	1.3	341800	52	138	180 ... 250	—	—	441200	485800	184100	680000
	319R4C	**906**	1.1	333000	43	138	180 ... 250	—	—	450800	496400	193600	680000
500	**319R4B**	**249**	2.0	321400	76	190	180 ... 250	—	—	413900	455700	158500	680000
	319R4B	**320**	1.6	412200	76	190	180 ... 250	—	—	428900	472200	172300	680000
	319R4B	**379**	1.3	424300	66	190	180 ... 250	—	—	439500	483900	182400	680000
	319R4B	**401**	1.2	448500	66	190	180 ... 250	—	—	443000	487800	185800	680000
	319R4B	**475**	1.1	353200	44	190	180 ... 250	—	—	453800	499700	196500	680000
	319R4B	**563**	0.89	356300	37	190	180 ... 250	—	—	465000	512000	200000	680000
	319R4B	**655**	0.76	336400	30	190	180 ... 250	—	—	475200	523200	200000	680000

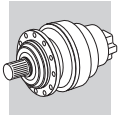

319 R — 430 — 471190 Nm

n_1 min^{-1}		i	n_2 min^{-1}	M_{n2} Nm	P_{n1} kW	Pt kW	P (IEC)	Rn_2 [N] MC	MZ	HC/PC	HZ/PZ	FZ	$M_{2\,max}$ Nm
500	**319R4C**	**345**	1.5	405900	70	230	180 ... 250	—	—	433600	477300	176700	680000
	319R4C	**442**	1.1	458400	61	230	180 ... 250	—	—	449300	494700	192000	680000
	319R4C	**525**	0.95	443000	50	230	180 ... 250	—	—	460400	506900	200000	680000
	319R4C	**555**	0.90	471200	50	230	180 ... 250	—	—	464100	511000	200000	680000
	319R4C	**657**	0.76	356300	32	230	180 ... 250	—	—	475400	523400	200000	680000
	319R4C	**780**	0.64	356300	27.0	230	180 ... 250	—	—	487200	536400	200000	680000
	319R4C	**906**	0.55	336400	22.0	230	180 ... 250	—	—	497800	548000	200000	680000

B

321 R — 440 — 655200 Nm

n_1 min^{-1}		i	n_2 min^{-1}	M_{n2} Nm	P_{n1} kW	Pt kW	P (IEC)	Rn_2 [N] MC	MZ	HC/PC	HZ/PZ	FZ	$M_{2\,max}$ Nm
1500	**321R4B**	**221**	6.8	205600	150	105	180 ... 250	—	—	513900	611700	675800	934000
	321R4B	**288**	5.2	265300	150	105	180 ... 250	—	—	513900	611700	731700	934000
	321R4B	**347**	4.3	320600	150	105	180 ... 250	—	—	524700	624600	773600	934000
	321R4B	**370**	4.1	341300	150	105	180 ... 250	—	—	529600	630300	788600	934000
	321R4B	**446**	3.4	409600	150	105	180 ... 250	—	—	543800	647300	833700	934000
	321R4B	**529**	2.8	484700	150	105	180 ... 250	—	—	557200	663300	877700	934000
	321R4C	**306**	4.9	249000	144	125	180 ... 250	—	—	515400	613500	745100	934000
	321R4C	**399**	3.8	324600	144	125	180 ... 250	—	—	535300	637200	806700	934000
	321R4C	**481**	3.1	390700	144	125	180 ... 250	—	—	549700	654300	852900	934000
	321R4C	**512**	2.9	416600	144	125	180 ... 250	—	—	554700	660300	869400	934000
	321R4C	**617**	2.4	501400	144	125	180 ... 250	—	—	569600	678000	919200	934000
	321R4C	**732**	2.0	521400	126	125	180 ... 250	—	—	583700	694800	967600	934000
1000	**321R4B**	**221**	4.5	233700	125	126	180 ... 250	—	—	521400	620600	763200	934000
	321R4B	**288**	3.5	304200	125	126	180 ... 250	—	—	541500	644500	826400	934000
	321R4B	**347**	2.9	361600	123	126	180 ... 250	—	—	556000	661800	873700	934000
	321R4B	**370**	2.7	391600	125	126	180 ... 250	—	—	561100	667900	890600	934000
	321R4B	**446**	2.2	460100	122	126	180 ... 250	—	—	576200	685900	941500	934000
	321R4B	**529**	1.9	513000	115	126	180 ... 250	—	—	590500	702800	991200	934000
	321R4C	**306**	3.3	281200	109	150	180 ... 250	—	—	546200	650100	841500	934000
	321R4C	**399**	2.5	366600	109	150	180 ... 250	—	—	567200	675200	911100	934000
	321R4C	**481**	2.1	441300	109	150	180 ... 250	—	—	582500	693300	963200	934000
	321R4C	**512**	2.0	470500	109	150	180 ... 250	—	—	587800	699700	981900	934000
	321R4C	**617**	1.6	566500	109	150	180 ... 250	—	—	603600	718500	1038100	934000
	321R4C	**732**	1.4	529800	86	150	180 ... 250	—	—	618600	736300	1092800	934000
500	**321R4B**	**221**	2.3	290300	78	210	180 ... 250	—	—	575600	685200	939600	934000
	321R4B	**288**	1.7	379500	78	210	180 ... 250	—	—	597900	711600	1017400	934000
	321R4B	**347**	1.4	450300	77	210	180 ... 250	—	—	613900	730700	1075600	934000
	321R4B	**370**	1.4	483100	77	210	180 ... 250	—	—	619500	737400	1096500	934000
	321R4B	**446**	1.1	567200	75	210	180 ... 250	—	—	636200	757200	1159200	934000
	321R4B	**529**	0.95	536400	60	210	180 ... 250	—	—	651900	776000	1200000	934000
	321R4C	**306**	1.6	346300	67	250	180 ... 250	—	—	603000	717800	1036000	934000
	321R4C	**399**	1.3	451600	67	250	180 ... 250	—	—	626300	745500	1121700	934000
	321R4C	**481**	1.0	543700	67	250	180 ... 250	—	—	643100	765500	1185800	934000
	321R4C	**512**	0.98	575400	66	250	180 ... 250	—	—	649000	772500	1200000	934000
	321R4C	**617**	0.81	655200	63	250	180 ... 250	—	—	666400	793300	1200000	934000
	321R4C	**732**	0.68	536400	43	250	180 ... 250	—	—	682900	812900	1200000	934000

25.5 DATI TECNICI RIDUTTORI COMBINATI VITE-PLANETARI - 3/V_M

Guida alla consultazione delle tabelle.

1

3/V 10M L4 | **33640 Nm**

n_1 min^{-1}		i	n_2 min^{-1}	M_{n2} Nm	P_{n1} kW	Pt kW	P (IEC)					Rn_2 [N] MC/PC	MZ/PZ	HC	HZ	FZ	
							B5	B5 / B14									
1500	**3/V 10M L4**	1617	**0.93**	28100	3.5	—	71	80	90	100	112	—	—	99200	125800	65000	343
	3/V 10M L4	1855	**0.81**	27100	3.0	—	71	80	90	100	112	—	—	101200	128300	65000	343
	3/V 10M L4	2016	**0.74**	29400	3.0	—	71	80	90	100	112	—	—	102400	129800	65000	343
	3/V 10M L4	2156	**0.70**	28100	2.7	—	71	80	90	100	112	—	—	103400	131100	65000	343
	3/V 10M L4	2455	**0.61**	27200	2.2	—	71	80	90	100	112	—	—	105300	133500	65000	343

2 3 4 5 6 7 8 9 10 11

1	Coppia di riferimento
2	Velocità di comando riduttore
3	Grandezza riduttore in esecuzione combinata vite + epicicloidale
4	Rapporto di riduzione
5	Velocità angolare all'albero lento
6	Coppia nominale all'albero lento del riduttore, basata su: - fattore di servizio f_S=1 - durata teorica di 10000 h
7	Potenza nominale all'albero veloce del riduttore, basata su: - fattore di servizio f_S=1 - durata teorica di 10000 h
8	Potenza termica riduttore
9	Grandezza motore elettrico IEC installabile. - Le predisposizioni contrassegnate con * sono dotate di una linguetta ribassata.
10	Carico radiale applicabile all'albero lento, calcolato per: - fattore di servizio f_S=1 - durata teorica di 10000 h - velocità uscita n_2 Per forze non applicate in mezzeria riferirsi ai diagrammi riportati a seguito delle pagine dimensionali del riduttore in oggetto
11	Pagina delle dimensioni

B

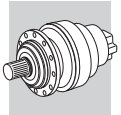

3/V 00 L3

1250 Nm

n_1 min^{-1}		i	n_2 min^{-1}	M_{n2} Nm	P_{n1} kW	Pt kW	P (IEC) B5 / B14			Rn_2 [N] MC/PC	MZ/PZ	HC	HZ	FZ	
1500	3/V 00 L3	415	3.6	1000	0.57	—	63	71	80	6810	6810	22500	26200	5210	250
	3/V 00 L3	436	3.4	730	0.42	—	63	71	—	6860	6860	22700	26400	5300	250
	3/V 00 L3	509	2.9	1040	0.48	—	63	71	80	7010	7010	23200	27000	5580	250
	3/V 00 L3	562	2.7	720	0.30	—	63	71	80	7110	7110	23500	27300	5770	250
	3/V 00 L3	654	2.3	1090	0.41	—	63	71	—	7270	7270	24000	27900	6070	250
	3/V 00 L3	689	2.2	1100	0.37	—	63	71	80	7320	7320	24200	28200	6170	250
	3/V 00 L3	818	1.8	1110	0.36	—	63	71	—	7500	7500	24800	28900	6540	250
	3/V 00 L3	903	1.7	790	0.23	—	63	71	—	7610	7610	25200	29300	6760	250
	3/V 00 L3	997	1.5	800	0.18	—	63	71	80	7720	7720	25500	29700	6980	250
	3/V 00 L3	1107	1.4	1190	0.28	—	63	71	—	7830	7830	25900	30100	7230	250
	3/V 00 L3	1198	1.3	830	0.17	—	63	71	—	7920	7920	26200	30500	7420	250
	3/V 00 L3	1381	1.1	1230	0.24	—	63	71	—	8080	8080	26700	31100	7780	250
	3/V 00 L3	1495	1.0	860	0.14	—	63	71	—	8180	8180	27000	31400	7990	250
	3/V 00 L3	1869	0.80	860	0.12	—	63	71	—	8440	8440	27900	32500	8000	250
	3/V 00 L3	2337	0.64	860	0.10	—	63	71	—	8710	8710	28800	33500	8000	250

B

3/V 01 L3

2460 Nm

n_1 min^{-1}		i	n_2 min^{-1}	M_{n2} Nm	P_{n1} kW	Pt kW	P (IEC) B5 / B14			Rn_2 [N] MC/PC	MZ/PZ	HC	HZ	FZ	
1500	3/V 01 L3	430	3.5	1880	0.90	—	63	71	80	6840	6840	22600	24700	5270	260
	3/V 01 L3	443	3.4	1370	0.66	—	63	71	80	6870	6870	22700	24800	5330	260
	3/V 01 L3	509	2.9	1270	0.58	—	63	71	80	7010	7010	23200	25300	5580	260
	3/V 01 L3	562	2.7	1400	0.58	—	63	71	80	7110	7110	23500	25700	5770	260
	3/V 01 L3	654	2.3	1180	0.45	—	63	71	—	7270	7270	24000	26300	6070	260
	3/V 01 L3	689	2.2	1710	0.58	—	63	71	80	7320	7320	24200	26500	6170	260
	3/V 01 L3	799	1.9	1540	0.43	—	63	71	80	7480	7480	24700	27000	6480	260
	3/V 01 L3	903	1.7	1230	0.36	—	63	71	—	7610	7610	25200	27500	6760	260
	3/V 01 L3	997	1.5	1600	0.36	—	63	71	80	7720	7720	25500	27900	6980	260
	3/V 01 L3	1105	1.4	1990	0.45	—	63	71	—	7830	7830	25900	28300	7230	260
	3/V 01 L3	1198	1.3	1650	0.34	—	63	71	—	7920	7920	26200	28600	7420	260
	3/V 01 L3	1381	1.1	1880	0.36	—	63	71	—	8080	8080	26700	29200	7780	260
	3/V 01 L3	1495	1.0	1720	0.29	—	63	71	—	8180	8180	27000	29600	7990	260
	3/V 01 L3	1869	0.80	1720	0.24	—	63	71	—	8440	8440	27900	30500	8000	260
	3/V 01 L3	2337	0.64	1720	0.20	—	63	71	—	8710	8710	28800	31500	8000	260

3/V 03 L3

2970 Nm

n_1 min^{-1}		i	n_2 min^{-1}	M_{n2} Nm	P_{n1} kW	Pt kW	P (IEC) B5 / B14			Rn_2 [N] MC/PC	MZ/PZ	HC	HZ	FZ	
1500	3/V 03 L3	395	3.8	2210	1.2	—	71	80	90	21800	25000	42100	49900	15400	270
	3/V 03 L3	460	3.3	2310	1.1	—	71	80	90	22300	25500	43100	51000	16200	270
	3/V 03 L3	502	3.0	2020	0.83	—	71	80	90	22600	25800	43600	51700	16700	270
	3/V 03 L3	544	2.8	2730	1.1	—	71	80	90	22900	26100	44100	52300	17100	270
	3/V 03 L3	623	2.4	2220	0.80	—	71	80	90	23300	26600	45000	53300	17900	270
	3/V 03 L3	736	2.0	2720	0.83	—	71	80	90	23900	27300	46000	54600	18900	270
	3/V 03 L3	793	1.9	2180	0.62	—	71	80	90	24100	27600	46500	55100	19400	270
	3/V 03 L3	923	1.6	2670	0.65	—	71	80	90	24700	28200	47600	56400	20400	270
	3/V 03 L3	1023	1.5	2710	0.66	—	71	80	—	25000	28600	48300	57200	21100	270
	3/V 03 L3	1189	1.3	2340	0.49	—	71	80	—	25600	29200	49300	58400	22200	270
	3/V 03 L3	1385	1.1	2820	0.51	—	71	80	—	26100	29900	50400	59700	23400	270
	3/V 03 L3	1610	0.93	2440	0.38	—	71	80	—	26700	30500	51500	61000	24000	270
	3/V 03 L3	1728	0.87	2850	0.41	—	71	80	—	27000	30800	52000	61600	24000	270
	3/V 03 L3	2009	0.75	2440	0.30	—	71	80	—	27600	31500	53100	63000	24000	270
	3/V 03 L3	2511	0.60	2300	0.23	—	71	80	—	28400	32500	54900	65000	24000	270

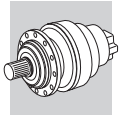

3/V 04 L3

3960 Nm

n_1 min^{-1}		i	n_2 min^{-1}	M_{n2} Nm	P_{n1} kW	Pt kW	P (IEC) B5	B5 / B14				Rn_2 [N] MC/PC	MZ/PZ	HC	HZ	FZ	
1500	3/V 04 L3	384	3.9	3510	1.9	—	71	80	90	100	112	21800	24900	41900	49700	15200	282
	3/V 04 L3	453	3.3	3730	1.7	—	71	80	90	100	112	22300	25500	43000	50900	16100	282
	3/V 04 L3	501	3.0	3010	1.4	—	71	80	90	100	112	22600	25800	43600	51700	16700	282
	3/V 04 L3	568	2.6	3160	1.2	—	71	80	90	100	112	23000	26300	44400	52600	17400	282
	3/V 04 L3	623	2.4	3530	1.2	—	71	80	90	100	112	23300	26600	45000	53300	17900	282
	3/V 04 L3	710	2.1	2640	0.73	—	71	80	90	100	112	23700	27100	45800	54300	18700	282
	3/V 04 L3	769	1.9	3330	0.90	—	71	80	90	100	112	24000	27500	46300	54900	19200	282
	3/V 04 L3	887	1.7	2740	0.61	—	71	80	90	100	112	24500	28000	47300	56000	20100	282
	3/V 04 L3	981	1.5	3860	0.91	—	71	80	90	100	112	24900	28400	48000	56900	20800	282
	3/V 04 L3	1152	1.3	3570	0.67	—	71	80	90	100	112	25500	29100	49100	58200	22000	282
	3/V 04 L3	1231	1.2	3610	0.68	—	71	80	90	100	112	25700	29400	49500	58700	22500	282
	3/V 04 L3	1419	1.1	2970	0.45	—	71	80	90	100	112	26200	30000	50600	59900	23600	282
	3/V 04 L3	1536	0.98	3740	0.56	—	71	80	90	100	112	26500	30300	51100	60600	24000	282
	3/V 04 L3	1774	0.85	3000	0.37	—	71	80	90	100	112	27100	30900	52200	61900	24000	282
	3/V 04 L3	1893	0.79	3000	0.37	—	71	80	90	100	112	27300	31200	52700	62400	24000	282
	3/V 04 L3	2366	0.63	3000	0.29	—	71	80	90	100	112	28200	32200	54400	64500	24000	282

B

3/V 05 L3

5800 Nm

n_1 min^{-1}		i	n_2 min^{-1}	M_{n2} Nm	P_{n1} kW	Pt kW	P (IEC) B5	B5 / B14				Rn_2 [N] MC/PC	MZ/PZ	HC	HZ	FZ	
1500	3/V 05 L3	396	3.8	3760	1.9	—	71	80	90	100	112	21900	25000	42100	50000	15400	294
	3/V 05 L3	462	3.3	4820	2.0	—	71	80	90	100	112	22300	25500	43100	51000	16200	294
	3/V 05 L3	529	2.8	3920	1.5	—	71	80	90	100	112	22800	26000	43900	52000	17000	294
	3/V 05 L3	576	2.6	4870	1.7	—	71	80	90	100	112	23100	26300	44500	52700	17400	294
	3/V 05 L3	623	2.4	4460	1.6	—	71	80	90	100	112	23300	26600	45000	53300	17900	294
	3/V 05 L3	715	2.1	4120	1.2	—	71	80	90	100	112	23800	27200	45900	54300	18800	294
	3/V 05 L3	793	1.9	4200	1.1	—	71	80	90	100	112	24100	27600	46500	55100	19400	294
	3/V 05 L3	894	1.7	4290	1.0	—	71	80	90	100	112	24500	28100	47300	56100	20200	294
	3/V 05 L3	1057	1.4	4410	0.97	—	71	80	90	100	112	25100	28700	48500	57500	21400	294
	3/V 05 L3	1116	1.3	4460	0.83	—	71	80	90	100	112	25300	29000	48900	57900	21700	294
	3/V 05 L3	1231	1.2	5470	1.0	—	71	80	90	100	112	25700	29400	49500	58700	22500	294
	3/V 05 L3	1431	1.0	4650	0.75	—	71	80	90	100	112	26300	30000	50600	60000	23600	294
	3/V 05 L3	1674	0.90	4430	0.57	—	71	80	90	100	112	26800	30700	51800	61400	24000	294
	3/V 05 L3	1786	0.84	4690	0.61	—	71	80	90	100	112	27100	31000	52300	61900	24000	294
	3/V 05 L3	2232	0.67	4430	0.46	—	71	80	90	100	112	28000	32000	53900	63900	24000	294

3/V 06 L3

10840 Nm

n_1 min^{-1}		i	n_2 min^{-1}	M_{n2} Nm	P_{n1} kW	Pt kW	P (IEC) B5	B5 / B14				Rn_2 [N] MC/PC	MZ/PZ	HC	HZ	FZ	
1500	3/V 06 L3	395	3.8	7590	3.8	—	71	80	90	100	112	26000	29600	59300	68400	22400	306
	3/V 06 L3	427	3.5	8820	4.1	—	71	80	90	100	112	26300	30000	59900	69200	23000	306
	3/V 06 L3	527	2.8	7590	2.9	—	71	80	90	100	112	27100	30900	61800	71300	24700	306
	3/V 06 L3	569	2.6	8560	3.0	—	71	80	90	100	112	27400	31200	62500	72100	25300	306
	3/V 06 L3	661	2.3	9370	2.8	—	71	80	90	100	112	28000	31900	63800	73700	26600	306
	3/V 06 L3	698	2.2	7540	2.1	—	71	80	90	100	112	28200	32200	64300	74200	27100	306
	3/V 06 L3	791	1.9	7680	2.1	—	71	80	90	100	112	28700	32700	65500	75600	28300	306
	3/V 06 L3	930	1.6	7890	1.7	—	71	80	90	100	112	29400	33500	67000	77300	29800	306
	3/V 06 L3	992	1.5	9450	2.1	—	71	80	90	100	112	29700	33800	67600	78100	30500	306
	3/V 06 L3	1153	1.3	8250	1.6	—	71	80	90	100	112	30300	34500	69100	79800	32100	306
	3/V 06 L3	1212	1.2	7820	1.5	—	71	80	90	100	112	30500	34800	69600	80300	32600	306
	3/V 06 L3	1395	1.1	8400	1.3	—	71	80	90	100	112	31100	35500	71000	82000	34200	306
	3/V 06 L3	1768	0.85	8630	1.1	—	71	80	90	100	112	32200	36700	73400	84800	35000	306
	3/V 06 L3	2139	0.70	8500	0.91	—	71	80	90	100	112	33100	37700	75500	87100	35000	306
	3/V 06 L3	2588	0.58	7000	0.62	—	71	80	90	100	112	34000	38800	77500	89500	35000	306

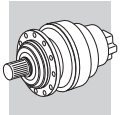

3/V 07 L3

15680 Nm

n_1 min^{-1}		i	n_2 min^{-1}	M_{n2} Nm	P_{n1} kW	Pt kW	P (IEC) B5 / B14				B5	Rn_2 [N] MC/PC	MZ/PZ	HC	HZ	FZ	
1500	3/V 07 L3	386	3.9	9020	4.5	—	80	90	100	112	132	31100	38900	70000	92100	28600	318
	3/V 07 L3	460	3.3	12300	5.3	—	80	90	100	112	132	31900	39900	71800	94400	30400	318
	3/V 07 L3	507	3.0	13600	5.3	—	80	90	100	112	132	32300	40400	72800	95700	31400	318
	3/V 07 L3	655	2.3	14400	4.8	—	80	90	100	112	132	33500	41900	75500	99300	34100	318
	3/V 07 L3	761	2.0	14200	4.0	—	80	90	100	112	132	34300	42800	77100	101400	35900	318
	3/V 07 L3	773	1.9	9970	2.6	—	80	90	100	112	132	34300	42900	77300	101600	36100	318
	3/V 07 L3	920	1.6	12300	2.9	—	80	90	100	112	132	35200	44000	79200	104200	38200	318
	3/V 07 L3	1015	1.5	14400	3.1	—	80	90	100	112	132	35700	44600	80300	105700	39500	318
	3/V 07 L3	1159	1.3	10600	2.0	—	80	90	100	112	132	36400	45500	81900	107700	41300	318
	3/V 07 L3	1288	1.2	14500	2.5	—	80	90	100	112	132	36900	46200	83100	109300	42800	318
	3/V 07 L3	1411	1.1	12300	2.0	—	80	90	100	112	132	37400	46800	84200	110800	44100	318
	3/V 07 L3	1545	0.97	11000	1.6	—	80	90	100	112	132	37900	47400	85300	112200	45000	318
	3/V 07 L3	1964	0.76	12300	1.5	—	80	90	100	112	132	39200	49000	88300	116100	45000	318
	3/V 07 L3	2150	0.70	11000	1.2	—	80	90	100	112	132	39700	49700	89400	117600	45000	318
	3/V 07 L3	2472	0.61	11000	1.1	—	80	90	100	112	132	40500	50700	91200	120000	45000	318

B

3/V 09 L3

23240 Nm

n_1 min^{-1}		i	n_2 min^{-1}	M_{n2} Nm	P_{n1} kW	Pt kW	P (IEC) B5				Rn_2 [N] MC/PC	MZ/PZ	HC	HZ	FZ	
1500	3/V 09 L3	370	4.1	13000	7.3	—	100	112	132	—	—	—	71100	91500	22600	330
	3/V 09 L3	442	3.4	17700	8.4	—	100	112	132	—	—	—	72900	93800	24000	330
	3/V 09 L3	507	3.0	14300	5.6	—	—	—	132	160	—	—	74400	95700	25100	330
	3/V 09 L3	655	2.3	17600	5.6	—	100	112	132	—	—	—	77100	99300	27300	330
	3/V 09 L3	761	2.0	14400	3.9	—	100	112	132	—	—	—	78800	101400	28700	330
	3/V 09 L3	800	1.9	21400	5.8	—	100	112	132	—	—	—	79400	102200	29200	330
	3/V 09 L3	840	1.8	20100	5.0	—	100	112	132	—	—	—	79900	102900	29700	330
	3/V 09 L3	1004	1.5	18100	3.9	—	100	112	132	—	—	—	82000	105500	31500	330
	3/V 09 L3	1159	1.3	16200	2.9	—	100	112	132	—	—	—	83700	107700	33000	330
	3/V 09 L3	1288	1.2	21500	3.6	—	100	112	132	—	—	—	85000	109300	34200	330
	3/V 09 L3	1497	1.0	18300	2.6	—	100	112	132	—	—	—	86800	111700	36000	330
	3/V 09 L3	1623	0.92	14700	2.1	—	100	112	—	—	—	—	87800	113000	36000	330
	3/V 09 L3	1792	0.84	22000	2.8	—	100	112	—	—	—	—	89100	114600	36000	330
	3/V 09 L3	2150	0.70	17000	1.7	—	100	112	132	—	—	—	91400	117600	36000	330
	3/V 09 L3	2472	0.61	17000	1.6	—	100	112	—	—	—	—	93300	120000	36000	330

3/V 10M L3

33640 Nm

n_1 min^{-1}		i	n_2 min^{-1}	M_{n2} Nm	P_{n1} kW	Pt kW	P (IEC) B5				Rn_2 [N] MC/PC	MZ/PZ	HC	HZ	FZ	
1500	3/V 10M L3	436	3.4	26700	12.2	—	—	—	132	160 (*)	—	—	82300	104300	43100	342
	3/V 10M L3	507	3.0	24900	9.7	—	—	—	132	160 (*)	—	—	84100	106600	45300	342
	3/V 10M L3	560	2.7	25300	9.0	—	—	—	132	160 (*)	—	—	85300	108100	46800	342
	3/V 10M L3	614	2.4	19300	6.3	—	—	—	132	160 (*)	—	—	86400	109500	48300	342
	3/V 10M L3	701	2.1	20900	5.7	—	—	—	132	160 (*)	—	—	88100	111600	50400	342
	3/V 10M L3	773	1.9	21300	5.5	—	—	—	132	160 (*)	—	—	89300	113200	52100	342
	3/V 10M L3	920	1.6	19400	4.4	—	100	112	132	—	—	—	91500	116100	55200	342
	3/V 10M L3	1004	1.5	31800	6.9	—	100	112	132	—	—	—	92700	117500	56900	342
	3/V 10M L3	1120	1.3	28600	5.5	—	100	112	132	—	—	—	94200	119400	59000	342
	3/V 10M L3	1227	1.2	19400	3.4	—	100	112	132	—	—	—	95400	120900	60800	342
	3/V 10M L3	1411	1.1	19500	3.0	—	100	112	132	—	—	—	97300	123400	63700	342

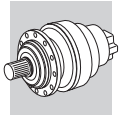

3/V 10M L4 — 33640 Nm

n_1 min^{-1}		i	n_2 min^{-1}	M_{n2} Nm	P_{n1} kW	Pt kW	P (IEC) B5	B5 / B14				Rn_2 [N] MC/PC	MZ/PZ	HC	HZ	FZ	
1500	3/V 10M L4	1617	0.93	28100	3.5	—	71	80	90	100	112	—	—	99200	125800	65000	343
	3/V 10M L4	1855	0.81	27100	3.0	—	71	80	90	100	112	—	—	101200	128300	65000	343
	3/V 10M L4	2016	0.74	29400	3.0	—	71	80	90	100	112	—	—	102400	129800	65000	343
	3/V 10M L4	2156	0.70	28100	2.7	—	71	80	90	100	112	—	—	103400	131100	65000	343
	3/V 10M L4	2455	0.61	27200	2.2	—	71	80	90	100	112	—	—	105300	133500	65000	343
	3/V 10M L4	2987	0.50	30100	2.1	—	71	80	90	100	112	—	—	108300	137300	65000	343
	3/V 10M L4	3273	0.46	27200	1.7	—	71	80	90	100	112	—	—	109700	139100	65000	343
	3/V 10M L4	3570	0.42	30100	1.9	—	71	80	90	100	112	—	—	111100	140900	65000	343
	3/V 10M L4	4036	0.37	30100	1.5	—	71	80	90	100	112	—	—	113100	143400	65000	343
	3/V 10M L4	4637	0.32	30100	1.5	—	71	80	90	100	112	—	—	115300	146200	65000	343
	3/V 10M L4	4959	0.30	28100	1.3	—	71	80	90	100	112	—	—	116400	147600	65000	343

B

3/V 11M L3 — 49210 Nm

n_1 min^{-1}		i	n_2 min^{-1}	M_{n2} Nm	P_{n1} kW	Pt kW	P (IEC) B5					Rn_2 [N] MC/PC	MZ/PZ	HC	HZ	FZ	
1500	3/V 11M L3	430	3.5	39100	17.9	—	—	—	—	160	180 (*)	—	—	107800	134200	42800	354
	3/V 11M L3	510	2.9	32000	12.3	—	—	—	—	160	180 (*)	—	—	113400	141300	45400	354
	3/V 11M L3	551	2.7	40800	14.5	—	—	—	—	160	180 (*)	—	—	116100	144600	46600	354
	3/V 11M L3	644	2.3	40000	12.5	—	—	—	132	160	—	—	—	121700	151600	49000	354
	3/V 11M L3	720	2.1	41400	12.3	—	—	—	132	160	—	—	—	125800	156700	50900	354
	3/V 11M L3	827	1.8	43500	10.6	—	—	—	132	160	—	—	—	131100	163400	53300	354
	3/V 11M L3	900	1.7	41400	10.1	—	100	112	132	—	—	—	—	134500	167600	54800	354
	3/V 11M L3	1004	1.5	35700	8.0	—	100	112	132	—	—	—	—	139000	173200	56900	354
	3/V 11M L3	1103	1.4	45600	8.8	—	—	—	132	160	—	—	—	143000	178100	58700	354
	3/V 11M L3	1274	1.2	33200	5.7	—	100	112	132	—	—	—	—	149300	186000	61600	354
	3/V 11M L3	1378	1.1	47200	7.5	—	100	112	132	—	—	—	—	152900	190400	63200	354
	3/V 11M L3	1636	0.92	41300	5.5	—	100	112	132	—	—	—	—	157000	195000	65000	354
	3/V 11M L3	1963	0.76	41300	4.7	—	100	112	132	—	—	—	—	157000	195000	65000	354
	3/V 11M L3	2329	0.64	36500	3.5	—	100	112	132	—	—	—	—	157000	195000	65000	354

3/V 11M L4 — 49210 Nm

n_1 min^{-1}		i	n_2 min^{-1}	M_{n2} Nm	P_{n1} kW	Pt kW	P (IEC) B5 / B14				B5	Rn_2 [N] MC/PC	MZ/PZ	HC	HZ	FZ	
1500	3/V 11M L4	2663	0.56	47800	3.7	—	80	90	100	112	132	—	—	133900	136600	65000	355
	3/V 11M L4	3063	0.49	47800	3.2	—	80	90	100	112	132	—	—	136600	139400	65000	355
	3/V 11M L4	3222	0.47	47800	3.0	—	80	90	100	112	132	—	—	137600	140400	65000	355
	3/V 11M L4	3557	0.42	42300	2.8	—	80	90	100	112	132	—	—	139500	142400	65000	355
	3/V 11M L4	4106	0.37	48900	2.8	—	80	90	100	112	132	—	—	142400	145300	65000	355
	3/V 11M L4	4410	0.34	47800	2.4	—	80	90	100	112	132	—	—	143900	146800	65000	355
	3/V 11M L4	5326	0.28	47800	2.0	—	80	90	100	112	132	—	—	147800	150800	65000	355

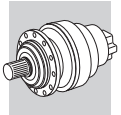

3/V 13M L3

60940 Nm

n_1 min^{-1}		i	n_2 min^{-1}	M_{n2} Nm	P_{n1} kW	Pt kW	P (IEC) B5					Rn_2 [N] MC/PC	MZ/PZ	HC	HZ	FZ	
1500	3/V 13M L3	370	4.1	39500	21	—	—	—	—	160	180 (*)	—	—	146300	171500	50200	366
	3/V 13M L3	425	3.5	45900	20	—	—	—	—	160	180 (*)	—	—	149300	174900	52600	366
	3/V 13M L3	516	2.9	48600	18.5	—	—	—	—	160	180 (*)	—	—	153500	179800	56100	366
	3/V 13M L3	567	2.6	48200	16.7	—	—	—	—	160	180 (*)	—	—	155500	182200	57800	366
	3/V 13M L3	673	2.2	49700	14.5	—	—	—	—	160	180 (*)	—	—	159400	186800	61200	366
	3/V 13M L3	741	2.0	45800	13.2	—	—	—	132	160	—	—	—	161600	189300	63200	366
	3/V 13M L3	810	1.9	36000	8.7	—	—	—	—	160	180 (*)	—	—	163600	191800	65100	366
	3/V 13M L3	870	1.7	53800	13.2	—	—	—	132	160	—	—	—	165300	193700	66700	366
	3/V 13M L3	1009	1.5	53300	10.6	—	—	—	132	160	—	—	—	168900	197900	70100	366
	3/V 13M L3	1088	1.4	51200	10.3	—	100	112	132	—	—	—	—	170700	200000	71900	366
	3/V 13M L3	1291	1.2	50400	8.6	—	100	112	132	—	—	—	—	174900	205000	76100	366
	3/V 13M L3	1418	1.1	56600	8.8	—	100	112	132	—	—	—	—	177300	207700	78500	366
	3/V 13M L3	1620	0.93	40100	5.3	—	—	—	132	160	—	—	—	180700	211700	80000	366
	3/V 13M L3	1682	0.89	57100	7.5	—	100	112	132	—	—	—	—	181700	212900	80000	366
	3/V 13M L3	2019	0.74	57100	6.4	—	100	112	132	—	—	—	—	186500	218500	80000	366
	3/V 13M L3	2430	0.62	40100	3.7	—	100	112	132	—	—	—	—	191500	224400	80000	366

B

3/V 13M L4

60940 Nm

n_1 min^{-1}		i	n_2 min^{-1}	M_{n2} Nm	P_{n1} kW	Pt kW	P (IEC) B5 / B14				B5	Rn_2 [N] MC/PC	MZ/PZ	HC	HZ	FZ	
1500	3/V 13M L4	2773	0.54	59100	4.8	—	80	90	100	112	132	—	—	192000	228600	80000	367
	3/V 13M L4	3263	0.46	54100	3.4	—	80	90	100	112	132	—	—	192000	231000	80000	367
	3/V 13M L4	3515	0.43	57100	3.3	—	80	90	100	112	132	—	—	192000	231000	80000	367
	3/V 13M L4	4046	0.37	60900	3.4	—	80	90	100	112	132	—	—	192000	231000	80000	367
	3/V 13M L4	4536	0.33	57100	2.8	—	80	90	100	112	132	—	—	192000	231000	80000	367
	3/V 13M L4	5046	0.30	50800	2.3	—	80	90	100	112	132	—	—	192000	231000	80000	367

3/V 14M L3

80640 Nm

n_1 min^{-1}		i	n_2 min^{-1}	M_{n2} Nm	P_{n1} kW	Pt kW	P (IEC) B5					Rn_2 [N] MC/PC	MZ/PZ	HC	HZ	FZ	
1500	3/V 14M L3	397	3.8	46100	22	—	—	—	—	160	180 (*)	—	—	137400	164800	57800	378
	3/V 14M L3	446	3.4	47700	21	—	—	—	—	160	180 (*)	—	—	139700	167500	60100	378
	3/V 14M L3	498	3.0	57800	22	—	—	—	—	160	180 (*)	—	—	141900	170200	62300	378
	3/V 14M L3	579	2.6	53700	17.6	—	—	—	—	160	180 (*)	—	—	145000	173900	65500	378
	3/V 14M L3	665	2.3	68100	20	—	—	—	—	160	180 (*)	—	—	147900	177300	68600	378
	3/V 14M L3	695	2.2	43000	13.2	—	—	—	132	160	—	—	—	148800	178500	69700	378
	3/V 14M L3	794	1.9	49300	12.5	—	—	—	132	160	—	—	—	151700	181900	72800	378
	3/V 14M L3	893	1.7	55200	13.2	—	—	—	132	160	—	—	—	154200	185000	75700	378
	3/V 14M L3	997	1.5	61900	12.5	—	—	—	132	160	—	—	—	156700	187900	78500	378
	3/V 14M L3	1116	1.3	52500	10.3	—	100	112	132	—	—	—	—	159200	191000	81500	378
	3/V 14M L3	1324	1.1	61500	10.2	—	100	112	132	—	—	—	—	163200	195700	86300	378
	3/V 14M L3	1339	1.1	47700	8.0	—	100	112	132	—	—	—	—	163400	196000	86700	378
	3/V 14M L3	1589	0.94	56600	8.0	—	100	112	132	—	—	—	—	167500	200900	90000	378
	3/V 14M L3	1662	0.90	73300	9.7	—	100	112	132	—	—	—	—	168600	202200	90000	378
	3/V 14M L3	1994	0.75	71000	8.0	—	100	112	132	—	—	—	—	173000	207500	90000	378
	3/V 14M L3	2318	0.65	63300	6.2	—	100	112	132	—	—	—	—	176800	212000	90000	378

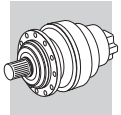

3/V 14M L4 — 80640 Nm

n_1 min^{-1}		i	n_2 min^{-1}	M_{n2} Nm	P_{n1} kW	Pt kW	P (IEC) - B5				Rn_2 [N] MC/PC	MZ/PZ	HC	HZ	FZ	
1500	3/V 14M L4	2504	0.60	80600	7.2	—	100	112	132	—	—	—	178700	214300	90000	379
	3/V 14M L4	2782	0.54	80600	6.2	—	100	112	132	—	—	—	181400	217600	90000	379
	3/V 14M L4	3182	0.47	78000	5.1	—	100	112	132	—	—	—	185000	221800	90000	379
	3/V 14M L4	3472	0.43	73300	4.3	—	—	—	132	160	—	—	187300	224600	90000	379
	3/V 14M L4	3993	0.38	73300	3.8	—	100	112	132	—	—	—	191100	229100	90000	379
	3/V 14M L4	4312	0.35	80600	4.2	—	100	112	132	—	—	—	193200	231700	90000	379
	3/V 14M L4	4959	0.30	80600	3.6	—	100	112	132	—	—	—	197100	236300	90000	379

B

3/V 15M L3 — 100800 Nm

n_1 min^{-1}		i	n_2 min^{-1}	M_{n2} Nm	P_{n1} kW	Pt kW	P (IEC) - B5					Rn_2 [N] MC/PC	MZ/PZ	HC	HZ	FZ	
1500	3/V 15M L3	386	3.9	62600	30	—	132	160	180	200	225	—	—	136900	164100	57300	390
	3/V 15M L3	446	3.4	65100	29	—	132	160	180	200	225	—	—	139700	167500	60100	390
	3/V 15M L3	498	3.0	82600	31	—	132	160	180	200	225	—	—	141900	170200	62300	390
	3/V 15M L3	560	2.7	81700	29	—	132	160	180	200	225	—	—	144300	173100	64800	390
	3/V 15M L3	665	2.3	85200	25	—	132	160	180	200	225	—	—	147900	177300	68600	390
	3/V 15M L3	840	1.8	80400	19.2	—	132	160	180	200	225	—	—	152900	183400	74200	390
	3/V 15M L3	997	1.5	88300	17.8	—	132	160	180	200	225	—	—	156700	187900	78500	390
	3/V 15M L3	1120	1.3	89200	17.1	—	132	160	180	200	225	—	—	159300	191100	81600	390
	3/V 15M L3	1329	1.1	90600	14.6	—	132	160	180	200	225	—	—	163300	195800	86400	390
	3/V 15M L3	1400	1.1	86900	13.6	—	132	160	180	200	225	—	—	164500	197300	88000	390
	3/V 15M L3	1662	0.90	91600	12.1	—	132	160	180	200	225	—	—	168600	202200	90000	390
	3/V 15M L3	1994	0.75	91600	10.5	—	132	160	180	200	225	—	—	173000	207500	90000	390
	3/V 15M L3	2318	0.65	79100	7.8	—	132	160	180	200	225	—	—	176800	212000	90000	390

3/V 15M L4 — 100800 Nm

n_1 min^{-1}		i	n_2 min^{-1}	M_{n2} Nm	P_{n1} kW	Pt kW	P (IEC) - B5				Rn_2 [N] MC/PC	MZ/PZ	HC	HZ	FZ	
1500	3/V 15M L4	2780	0.54	100800	7.4	—	—	—	132	160 (*)	—	—	181400	217600	90000	391
	3/V 15M L4	3300	0.45	100800	6.3	—	—	—	132	160 (*)	—	—	185900	223000	90000	391
	3/V 15M L4	3489	0.43	91600	5.4	—	—	—	132	160 (*)	—	—	187400	224800	90000	391
	3/V 15M L4	4171	0.36	100800	5.2	—	100	112	132	—	—	—	192300	230600	90000	391
	3/V 15M L4	4950	0.30	100800	4.4	—	100	112	132	—	—	—	197000	236300	90000	391
	3/V 15M L4	5234	0.29	91600	3.8	—	100	112	132	—	—	—	198600	238200	90000	391

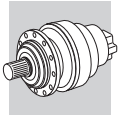

3/V 16M L3 — 134390 Nm

n_1 min^{-1}		i	n_2 min^{-1}	M_{n2} Nm	P_{n1} kW	Pt kW	P (IEC) B5					Rn_2 [N] MC/PC	MZ/PZ	HC	HZ	FZ	
1500	3/V 16M L3	397	3.8	99700	48	—	132	160	180	200	225	—	—	210300	235900	96300	402
	3/V 16M L3	446	3.4	93400	41	—	132	160	180	200	225	—	—	213800	239800	100100	402
	3/V 16M L3	530	2.8	110900	41	—	132	160	180	200	225	—	—	219100	245800	106000	402
	3/V 16M L3	669	2.2	84000	25	—	132	160	180	200	225	—	—	226500	254100	114600	402
	3/V 16M L3	794	1.9	99700	25	—	132	160	180	200	225	—	—	232200	260400	121400	402
	3/V 16M L3	893	1.7	100800	24	—	132	160	180	200	225	—	—	236000	264800	126200	402
	3/V 16M L3	1059	1.4	116400	23	—	132	160	180	200	225	—	—	241900	271300	133600	402
	3/V 16M L3	1324	1.1	112100	18.6	—	132	160	180	200	225	—	—	249700	280100	143900	402
	3/V 16M L3	1589	0.94	112100	15.5	—	132	160	180	200	225	—	—	256300	287500	150000	402

B

3/V 16M L4 — 134390 Nm

n_1 min^{-1}		i	n_2 min^{-1}	M_{n2} Nm	P_{n1} kW	Pt kW	P (IEC) B5					Rn_2 [N] MC/PC	MZ/PZ	HC	HZ	FZ	
1500	3/V 16M L4	1785	0.84	105900	12.2	—	—	—	132	160 (*)		—	—	260600	292400	150000	403
	3/V 16M L4	1920	0.78	113900	12.2	—	—	—	132	160 (*)		—	—	263300	295400	150000	403
	3/V 16M L4	2343	0.64	134400	11.8	—	—	—	132	160 (*)		—	—	270900	303900	150000	403
	3/V 16M L4	2678	0.56	111600	9.0	—	100	112	132	—		—	—	276200	309800	150000	403
	3/V 16M L4	2880	0.52	120000	9.0	—	100	112	132	—		—	—	279000	313000	150000	403
	3/V 16M L4	3514	0.43	134400	8.2	—	100	112	132	—		—	—	287100	322100	150000	403
	3/V 16M L4	4171	0.36	134400	6.9	—	100	112	132	—		—	—	294200	330000	150000	403
	3/V 16M L4	4950	0.30	118100	5.1	—	100	112	132	—		—	—	301500	338200	150000	403

3/V 17M L3 — 207490 Nm

n_1 min^{-1}		i	n_2 min^{-1}	M_{n2} Nm	P_{n1} kW	Pt kW	P (IEC) B5					Rn_2 [N] MC/PC	MZ/PZ	HC	HZ	FZ	
1500	3/V 17M L3	405	3.7	120100	55	—	132	160	180	200	225	—	—	328100	348500	96900	412
	3/V 17M L3	425	3.5	106700	48	—	132	160	180	200	225	—	—	330400	351000	98500	412
	3/V 17M L3	512	2.9	128400	48	—	132	160	180	200	225	—	—	339200	360400	104800	412
	3/V 17M L3	567	2.6	118700	41	—	132	160	180	200	225	—	—	344200	365700	108500	412
	3/V 17M L3	608	2.5	128800	40	—	132	160	180	200	225	—	—	347600	369300	111000	412
	3/V 17M L3	683	2.2	142900	41	—	132	160	180	200	225	—	—	353500	375500	115400	412
	3/V 17M L3	810	1.9	135200	32	—	132	160	180	200	225	—	—	362200	384800	122100	412
	3/V 17M L3	851	1.8	106700	25	—	132	160	180	200	225	—	—	364700	387500	124200	412
	3/V 17M L3	1024	1.5	128400	25	—	132	160	180	200	225	—	—	374500	397900	132100	412
	3/V 17M L3	1134	1.3	128000	24	—	132	160	180	200	225	—	—	380100	403800	136600	412
	3/V 17M L3	1215	1.2	144900	24	—	132	160	180	200	225	—	—	383800	407800	139800	412
	3/V 17M L3	1365	1.1	154100	24	—	132	160	180	200	225	—	—	390300	414600	145400	412

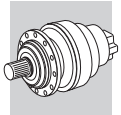

3/V 17M L4 — 207490 Nm

n_1 min^{-1}		i	n_2 min^{-1}	M_{n2} Nm	P_{n1} kW	Pt kW	P (IEC) B5					Rn_2 [N] MC/PC	MZ/PZ	HC	HZ	FZ	
1500	3/V 17M L4	1780	0.84	184300	21	—	—	—	—	160	180 (*)	—	—	405300	430600	150000	413
	3/V 17M L4	2065	0.73	179800	17.0	—	—	—	—	160	180 (*)	—	—	414000	439800	150000	413
	3/V 17M L4	2485	0.60	125800	9.9	—	—	—	—	160	180 (*)	—	—	425100	451600	150000	413
	3/V 17M L4	2773	0.54	166400	13.2	—	—	—	132	160	—	—	—	431800	458800	150000	413
	3/V 17M L4	3168	0.47	190800	12.5	—	—	—	132	160	—	—	—	440100	467600	150000	413
	3/V 17M L4	3583	0.42	156000	8.8	—	—	—	—	160	180 (*)	—	—	442000	470000	150000	413
	3/V 17M L4	4129	0.36	179800	9.0	—	—	—	132	160	—	—	—	442000	470000	150000	413
	3/V 17M L4	4449	0.34	203000	10.3	—	100	112	132	—	—	—	—	442000	470000	150000	413
	3/V 17M L4	4970	0.30	125800	5.2	—	—	—	132	160	—	—	—	442000	470000	150000	413

B

3/V 18M L4 — 297550 Nm

n_1 min^{-1}		i	n_2 min^{-1}	M_{n2} Nm	P_{n1} kW	Pt kW	P (IEC) B5					Rn_2 [N] MC/PC	MZ/PZ	HC	HZ	FZ	
1500	3/V 18M L4	765	2.0	185000	47	—	132	160	180	200	225	—	—	341800	385900	159800	422
	3/V 18M L4	982	1.5	237400	47	—	132	160	180	200	225	—	—	354200	399900	173600	422
	3/V 18M L4	1165	1.3	281800	47	—	132	160	180	200	225	—	—	363000	409800	183800	422
	3/V 18M L4	1232	1.2	289200	45	—	132	160	180	200	225	—	—	365900	413100	187300	422
	3/V 18M L4	1473	1.0	255400	34	—	132	160	180	200	225	—	—	375300	423800	198800	422
	3/V 18M L4	1748	0.86	297600	33	—	132	160	180	200	225	—	—	384600	434200	200000	422
	3/V 18M L4	1848	0.81	297600	31	—	132	160	180	200	225	—	—	387700	437700	200000	422
	3/V 18M L4	2295	0.65	212900	19.2	—	132	160	180	200	225	—	—	399900	451500	200000	422
	3/V 18M L4	2464	0.61	297600	24	—	132	160	180	200	225	—	—	403900	456100	200000	422
	3/V 18M L4	2945	0.51	273300	19.2	—	132	160	180	200	225	—	—	414400	467900	200000	422
	3/V 18M L4	3495	0.43	297600	17.7	—	132	160	180	200	225	—	—	424600	479400	200000	422
	3/V 18M L4	3696	0.41	297600	16.7	—	132	160	180	200	225	—	—	428000	483300	200000	422
	3/V 18M L4	4386	0.34	297600	14.1	—	132	160	180	200	225	—	—	438600	495300	200000	422
	3/V 18M L4	5099	0.29	264700	10.8	—	132	160	180	200	225	—	—	448200	506000	200000	422

3/V 19 L4 — 471190 Nm

n_1 min^{-1}		i	n_2 min^{-1}	M_{n2} Nm	P_{n1} kW	Pt kW	P (IEC) B5					Rn_2 [N] MC/PC	MZ/PZ	HC	HZ	FZ	
1500	3/V 19 L4	2582	0.58	365200	29	—	132	160	180	200	225	—	—	494100	544000	200000	432
	3/V 19 L4	3231	0.46	356300	22	—	132	160	180	200	225	—	—	510200	561700	200000	432
	3/V 19 L4	4095	0.37	380000	19.2	—	132	160	180	200	225	—	—	527700	581100	200000	432
	3/V 19 L4	4457	0.34	336400	15.3	—	132	160	180	200	225	—	—	534200	588100	200000	432
	3/V 19 L4	5164	0.29	412400	17.6	—	132	160	180	200	225	—	—	545500	600600	200000	432

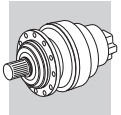

3/V 21 L4

655740 Nm

n_1 min^{-1}		i	n_2 min^{-1}	M_{n2} Nm	P_{n1} kW	Pt kW	P (IEC)					Rn_2 [N] MC/PC	MZ/PZ	HC	HZ	FZ	
							B5									V	
1500	**3/V 21 L4**	**1062**	1.4	443000	79	—	132	160	180	200	225	—	—	615600	732700	1081800	442
	3/V 21 L4	**1260**	1.2	425500	65	—	132	160	180	200	225	—	—	630800	750900	1138800	442
	3/V 21 L4	**1517**	0.99	512200	65	—	132	160	180	200	225	—	—	647800	771000	1200000	442
	3/V 21 L4	**1800**	0.83	536400	57	—	132	160	180	200	225	—	—	663800	790100	1200000	442
	3/V 21 L4	**1890**	0.79	460000	48	—	132	160	180	200	225	—	—	668500	795700	1200000	442
	3/V 21 L4	**2275**	0.66	553700	48	—	132	160	180	200	225	—	—	686400	817000	1200000	442
	3/V 21 L4	**2520**	0.60	511700	41	—	132	160	180	200	225	—	—	696500	829000	1200000	442
	3/V 21 L4	**2700**	0.56	536400	39	—	132	160	180	200	225	—	—	703400	837300	1200000	442
	3/V 21 L4	**3600**	0.42	536400	30	—	132	160	180	200	225	—	—	732900	872400	1200000	442
	3/V 21 L4	**3780**	0.40	460000	25	—	132	160	180	200	225	—	—	738000	878500	1200000	442
	3/V 21 L4	**4550**	0.33	553700	25	—	132	160	180	200	225	—	—	757800	902100	1200000	442
	3/V 21 L4	**5040**	0.30	552000	24	—	132	160	180	200	225	—	—	769000	915300	1200000	442

B

25.6 DATI TECNICI RIDUTTORI COMBINATI - 3/A

Guida alla consultazione delle tabelle.

1

3/A 00 L2 | **1250 Nm**

n_1 min^{-1}		i	n_2 min^{-1}	M_{n2} Nm	P_{n1} kW	P_t kW	P (IEC)									Rn_2 [N] MC/PC	MZ/PZ	HC	HZ	FZ	
1500	**3/A 00 L2**	19.1	**78**	470	4.3	—	63	71	80	90	100	112	—	—	—	3270	3270	11600	13500	1870	251
	3/A 00 L2	23.4	**64**	580	4.3	—	63	71	80	90	100	112	—	—	—	3500	3500	12300	14300	2000	251
	3/A 00 L2	31.7	**47**	650	3.5	—	63	71	80	90	100	112	—	—	—	3870	3870	13500	15700	2210	251
	3/A 00 L2	39.6	**38**	550	2.4	—	63	71	80	90	100	112	—	—	—	4170	4170	14400	16800	2380	251
	3/A 00 L2	41.5	**36**	650	2.7	—	63	71	80	90	100	112	—	—	—	4240	4240	14600	17000	2420	251

2 3 4 5 6 7 8 9 10 11

1	Coppia di riferimento
2	Velocità di comando riduttore
3	Grandezza riduttore in esecuzione combinata planetario-ortogonale
4	Rapporto di riduzione
5	Velocità angolare all'albero lento
6	Coppia nominale all'albero lento del riduttore, basata su: - fattore di servizio f_S=1 - durata teorica di 10000 h
7	Potenza nominale all'albero veloce del riduttore, basata su: - fattore di servizio f_S=1 - durata teorica di 10000 h
8	Potenza termica riduttore
9	Grandezza motore elettrico IEC installabile
10	Carico radiale applicabile all'albero lento, calcolato per: - fattore di servizio f_S=1 - durata teorica 10000 h - velocità uscita n_2 Per forze non applicate in mezzeria riferirsi ai diagrammi riportati a seguito delle pagine dimensionali del riduttore in oggetto
11	Pagina delle dimensioni

B

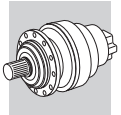

3/A 00 L2 — 1250 Nm

n_1 min^{-1}		i	n_2 min^{-1}	M_{n2} Nm	P_{n1} kW	Pt kW	P (IEC)									Rn_2 [N] MC/PC	MZ/PZ	HC	HZ	FZ	
1500	**3/A 00 L2**	**19.1**	78	470	4.3	—	63	71	80	90	100	112	—	—	—	3270	3270	11600	13500	1870	251
	3/A 00 L2	**23.4**	64	580	4.3	—	63	71	80	90	100	112	—	—	—	3500	3500	12300	14300	2000	251
	3/A 00 L2	**31.7**	47	650	3.5	—	63	71	80	90	100	112	—	—	—	3870	3870	13500	15700	2210	251
	3/A 00 L2	**39.6**	38	550	2.4	—	63	71	80	90	100	112	—	—	—	4170	4170	14400	16800	2380	251
	3/A 00 L2	**41.5**	36	650	2.7	—	63	71	80	90	100	112	—	—	—	4240	4240	14600	17000	2420	251
	3/A 00 L2	**51.8**	28.9	550	1.8	—	63	71	80	90	100	112	—	—	—	4560	4560	15600	18200	2610	251
	3/A 00 L2	**61.2**	24.5	650	1.8	—	63	71	80	90	100	112	—	—	—	4820	4820	16400	19100	2750	251
	3/A 00 L2	**71.0**	21.1	650	1.6	—	63	71	80	90	100	112	—	—	—	5060	5060	17200	20000	2890	251
	3/A 00 L2	**80.2**	18.7	650	1.4	—	63	71	80	90	100	112	—	—	—	5280	5280	17800	20700	3010	251
	3/A 00 L2	**88.6**	16.9	550	1.1	—	63	71	80	90	100	112	—	—	—	5450	5450	18400	21300	3120	251
	3/A 00 L2	**100**	15.0	550	0.95	—	63	71	80	90	100	112	—	—	—	5680	5680	19000	22100	3240	251
	3/A 00 L2	**107**	14.0	650	1.0	—	63	71	80	90	100	112	—	—	—	5810	5810	19400	22600	3320	251
	3/A 00 L2	**134**	11.2	550	0.71	—	63	71	80	90	100	112	—	—	—	6260	6260	20800	24200	3580	251
	3/A 00 L2	**171**	8.8	550	0.55	—	63	71	80	90	100	112	—	—	—	6500	6500	21500	25000	3880	251
	3/A 00 L2	**203**	7.4	650	0.55	—	63	71	80	90	100	112	—	—	—	6500	6500	21500	25000	4100	251
	3/A 00 L2	**219**	6.9	620	0.49	—	63	71	80	90	100	112	—	—	—	6500	6500	21500	25000	4210	251
	3/A 00 L2	**253**	5.9	550	0.37	—	63	71	80	90	100	112	—	—	—	6500	6500	21500	25000	4420	251
	3/A 00 L2	**296**	5.1	650	0.38	—	63	71	80	90	100	112	—	—	—	6500	6500	21500	25000	4660	251
	3/A 00 L2	**319**	4.7	440	0.24	—	63	71	—	—	—	—	—	—	—	6560	6560	21700	25200	4770	251
	3/A 00 L2	**369**	4.1	560	0.26	—	63	71	80	90	100	112	—	—	—	6700	6700	22100	25800	5010	251
	3/A 00 L2	**391**	3.8	540	0.24	—	63	71	—	—	—	—	—	—	—	6750	6750	22300	26000	5110	251
	3/A 00 L2	**441**	3.4	690	0.27	—	63	71	—	—	—	—	—	—	—	6870	6870	22700	26400	5320	251
	3/A 00 L2	**550**	2.7	590	0.19	—	63	71	—	—	—	—	—	—	—	7090	7090	23400	27300	5730	251
	3/A 00 L2	**660**	2.3	610	0.16	—	63	71	—	—	—	—	—	—	—	7270	7270	24100	28000	6080	251

B

3/A 01 L2 — 2460 Nm

n_1 min^{-1}		i	n_2 min^{-1}	M_{n2} Nm	P_{n1} kW	Pt kW	P (IEC)									Rn_2 [N] MC/PC	MZ/PZ	HC	HZ	FZ	
1500	**3/A 01 L2**	**18.8**	80	710	6.5	—	—	—	80	90	100	112	—	—	—	3250	3250	11500	12600	1860	261
	3/A 01 L2	**23.0**	65	870	6.5	—	—	—	80	90	100	112	—	—	—	3480	3480	12300	13400	1990	261
	3/A 01 L2	**31.2**	48	1180	6.5	—	—	—	80	90	100	112	—	—	—	3850	3850	13400	14700	2200	261
	3/A 01 L2	**35.8**	42	760	3.7	—	—	—	80	90	100	112	—	—	—	4030	4030	14000	15300	2300	261
	3/A 01 L2	**40.1**	37	870	3.7	—	63	71	80	90	100	112	—	—	—	4190	4190	14500	15800	2390	261
	3/A 01 L2	**43.9**	34	930	3.7	—	—	—	80	90	100	112	—	—	—	4320	4320	14900	16300	2470	261
	3/A 01 L2	**49.1**	31	830	2.9	—	63	71	80	90	100	112	—	—	—	4480	4480	15400	16800	2560	261
	3/A 01 L2	**54.2**	27.7	1180	3.7	—	63	71	80	90	100	112	—	—	—	4630	4630	15800	17300	2650	261
	3/A 01 L2	**59.4**	25.2	1260	3.7	—	—	—	80	90	100	112	—	—	—	4770	4770	16300	17800	2730	261
	3/A 01 L2	**74.2**	20.2	1150	2.7	—	—	—	80	90	100	112	—	—	—	5140	5140	17400	19000	2940	261
	3/A 01 L2	**81.3**	18.4	1300	2.8	—	63	71	80	90	100	112	—	—	—	5300	5300	17900	19600	3030	261
	3/A 01 L2	**102**	14.8	1150	2.0	—	63	71	80	90	100	112	—	—	—	5710	5710	19100	20900	3260	261
	3/A 01 L2	**133**	11.3	1300	1.7	—	63	71	80	90	100	112	—	—	—	6250	6250	20800	22700	3570	261
	3/A 01 L2	**166**	9.0	1150	1.2	—	63	71	80	90	100	112	—	—	—	6500	6500	21500	23500	3840	261
	3/A 01 L2	**184**	8.1	1030	0.97	—	63	71	80	90	100	112	—	—	—	6500	6500	21500	23500	3980	261
	3/A 01 L2	**204**	7.3	1300	1.1	—	63	71	80	90	100	112	—	—	—	6500	6500	21500	23500	4120	261
	3/A 01 L2	**220**	6.8	830	0.65	—	63	71	80	90	100	112	—	—	—	6500	6500	21500	23500	4220	261
	3/A 01 L2	**255**	5.9	1150	0.78	—	63	71	80	90	100	112	—	—	—	6500	6500	21500	23500	4430	261
	3/A 01 L2	**269**	5.6	1010	0.65	—	63	71	80	90	100	112	—	—	—	6500	6500	21500	23500	4510	261
	3/A 01 L2	**311**	4.8	1150	0.64	—	63	71	80	90	100	112	—	—	—	6530	6530	21600	23600	4740	261
	3/A 01 L2	**364**	4.1	1340	0.64	—	63	71	80	90	100	112	—	—	—	6680	6680	22100	24200	4990	261
	3/A 01 L2	**393**	3.8	830	0.36	—	63	71	—	—	—	—	—	—	—	6760	6760	22300	24400	5120	261
	3/A 01 L2	**454**	3.3	1150	0.44	—	63	71	80	90	100	112	—	—	—	6900	6900	22800	24900	5370	261
	3/A 01 L2	**533**	2.8	1120	0.36	—	63	71	—	—	—	—	—	—	—	7060	7060	23300	25500	5660	261
	3/A 01 L2	**665**	2.3	1150	0.30	—	63	71	—	—	—	—	—	—	—	7280	7280	24100	26300	6100	261

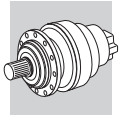

3/A 03 L2 — 2970 Nm

n_1 min^{-1}		i	n_2 min^{-1}	M_{n2} Nm	P_{n1} kW	Pt kW	P (IEC)									Rn_2 [N] MC/PC	MZ/PZ	HC	HZ	FZ	
1500	3/A 03 L2	19.4	77	1050	9.3	—	—	—	80	90	100	112	—	—	—	10600	12100	21900	26000	5640	271
	3/A 03 L2	23.0	65	1240	9.3	—	—	—	80	90	100	112	—	—	—	11200	12800	23100	27300	5960	271
	3/A 03 L2	28.8	52	1550	9.3	—	—	—	80	90	100	112	—	—	—	12100	13800	24700	29300	6430	271
	3/A 03 L2	33.5	45	1800	9.3	—	—	—	80	90	100	112	—	—	—	12700	14600	25800	30600	6760	271
	3/A 03 L2	40.5	37	1650	7.0	—	—	—	80	90	100	112	—	—	—	13600	15500	27300	32400	7200	271
	3/A 03 L2	43.4	35	1800	7.2	—	—	—	80	90	100	112	—	—	—	13900	15900	27900	33100	7370	271
	3/A 03 L2	52.5	28.6	1650	5.4	—	—	—	80	90	100	112	—	—	—	14800	16900	29600	35000	7850	271
	3/A 03 L2	52.5	28.6	1650	5.4	—	—	—	80	90	100	112	—	—	—	14800	16900	29600	35000	7850	271
	3/A 03 L2	62.9	23.8	1550	4.2	—	63	71	80	90	100	112	—	—	—	15700	18000	31200	37000	8340	271
	3/A 03 L2	73.2	20.5	1800	4.2	—	63	71	80	90	100	112	—	—	—	16500	18900	32700	38700	8770	271
	3/A 03 L2	88.5	16.9	1650	3.2	—	63	71	80	90	100	112	—	—	—	17600	20100	34600	41000	9340	271
	3/A 03 L2	96.9	15.5	1690	3.0	—	63	71	80	90	100	112	—	—	—	18200	20700	35500	42100	9630	271
	3/A 03 L2	182	8.3	1830	1.7	—	63	71	80	90	100	112	—	—	—	21000	24000	40500	48000	11900	271
	3/A 03 L2	220	6.8	1650	1.3	—	63	71	80	90	100	112	—	—	—	21000	24000	40500	48000	12700	271
	3/A 03 L2	269	5.6	1840	1.2	—	63	71	80	90	100	112	—	—	—	21000	24000	40500	48000	13500	271
	3/A 03 L2	269	5.6	1840	1.2	—	63	71	80	90	100	112	—	—	—	21000	24000	40500	48000	13500	271
	3/A 03 L2	326	4.6	1660	0.88	—	63	71	80	90	100	112	—	—	—	21200	24300	41000	48600	14400	271
	3/A 03 L2	352	4.3	2020	0.99	—	63	71	80	90	100	112	—	—	—	21500	24600	41400	49100	14800	271
	3/A 03 L2	409	3.7	1940	0.82	—	63	71	80	90	100	112	—	—	—	22000	25100	42300	50200	15600	271
	3/A 03 L2	495	3.0	1720	0.60	—	63	71	80	90	100	112	—	—	—	22600	25800	43500	51600	16600	271
	3/A 03 L2	574	2.6	1740	0.52	—	63	71	80	90	100	112	—	—	—	23000	26300	44400	52700	17400	271
	3/A 03 L2	605	2.5	1800	0.51	—	63	71	80	90	100	112	—	—	—	23200	26500	44800	53100	17700	271
	3/A 03 L2	731	2.1	1800	0.42	—	63	71	80	90	100	112	—	—	—	23900	27300	46000	54500	18900	271

B

3/A 04 L2 — 3960 Nm

n_1 min^{-1}		i	n_2 min^{-1}	M_{n2} Nm	P_{n1} kW	Pt kW	P (IEC)									Rn_2 [N] MC/PC	MZ/PZ	HC	HZ	FZ	
1500	3/A 04 L2	18.7	80	1920	17.7	—	—	—	80	90	100	112	132	—	—	10500	12000	21700	25700	5570	283
	3/A 04 L2	22.1	68	2270	17.7	—	—	—	80	90	100	112	132	—	—	11100	12700	22800	27000	5880	283
	3/A 04 L2	25.6	59	1920	12.9	—	—	—	80	90	100	112	132	—	—	11600	13300	23800	28200	6180	283
	3/A 04 L2	27.7	54	2830	17.6	—	—	—	80	90	100	112	132	—	—	12000	13700	24400	28900	6350	283
	3/A 04 L2	30.2	50	2270	12.9	—	—	—	80	90	100	112	132	—	—	12300	14100	25000	29700	6530	283
	3/A 04 L2	35.3	43	2270	11.1	—	—	—	80	90	100	112	132	—	—	13000	14800	26200	31100	6880	283
	3/A 04 L2	39.1	38	2270	10.0	—	—	—	80	90	100	112	132	—	—	13400	15300	27100	32100	7120	283
	3/A 04 L2	44.3	34	2850	11.1	—	—	—	80	90	100	112	132	—	—	14000	16000	28100	33300	7420	283
	3/A 04 L2	49.7	30	2270	7.9	—	63	71	80	90	100	112	132	—	—	14500	16600	29100	34500	7710	283
	3/A 04 L2	54.5	27.5	2390	7.5	—	—	—	80	90	100	112	132	—	—	15000	17100	29900	35400	7950	283
	3/A 04 L2	62.4	24.0	2850	7.9	—	63	71	80	90	100	112	132	—	—	15700	17900	31100	36900	8320	283
	3/A 04 L2	68.4	21.9	2510	6.3	—	—	—	80	90	100	112	132	—	—	16200	18500	32000	37900	8580	283
	3/A 04 L2	81.7	18.4	2370	5.0	—	63	71	80	90	100	112	132	—	—	17200	19600	33800	40000	9100	283
	3/A 04 L2	90.7	16.5	2390	4.5	—	—	—	80	90	100	112	132	—	—	17800	20300	34800	41300	9420	283
	3/A 04 L2	102	14.7	2550	4.3	—	63	71	80	90	100	112	132	—	—	18500	21100	36100	42700	9790	283
	3/A 04 L2	117	12.8	2390	3.5	—	—	—	80	90	100	112	132	—	—	19300	22100	37600	44500	10300	283
	3/A 04 L2	129	11.6	2720	3.6	—	63	71	80	90	100	112	132	—	—	20000	22800	38700	45900	10600	283
	3/A 04 L2	149	10.1	2390	2.8	—	63	71	80	90	100	112	132	—	—	21000	24000	40400	47900	11100	283
	3/A 04 L2	162	9.2	2900	3.1	—	63	71	80	90	100	112	132	—	—	21000	24000	40500	48000	11400	283
	3/A 04 L2	174	8.6	2970	2.9	—	63	71	80	90	100	112	—	—	—	21000	24000	40500	48000	11700	283
	3/A 04 L2	205	7.3	3500	2.9	—	63	71	80	90	100	112	—	—	—	21000	24000	40500	48000	12400	283
	3/A 04 L2	226	6.6	3500	2.7	—	63	71	80	90	100	112	—	—	—	21000	24000	40500	48000	12800	283
	3/A 04 L2	250	6.0	3500	2.4	—	63	71	80	90	100	112	—	—	—	21000	24000	40500	48000	13200	283
	3/A 04 L2	283	5.3	2850	1.7	—	63	71	80	90	100	112	—	—	—	21000	24000	40500	48000	13800	283
	3/A 04 L2	317	4.7	2400	1.3	—	63	71	80	90	100	112	—	—	—	21200	24200	40800	48400	14300	283
	3/A 04 L2	349	4.3	2430	1.2	—	63	71	80	90	100	112	—	—	—	21500	24500	41400	49000	14800	283
	3/A 04 L2	386	3.9	2450	1.1	—	63	71	80	90	100	112	—	—	—	21800	24900	42000	49800	15300	283
	3/A 04 L2	469	3.2	2500	0.92	—	63	71	80	90	100	112	—	—	—	22400	25600	43200	51200	16300	283
	3/A 04 L2	520	2.9	2520	0.84	—	63	71	80	90	100	112	—	—	—	22700	26000	43800	51900	16900	283

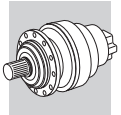

3/A 05 L2 — 5800 Nm

n_1 min^{-1}		i	n_2 min^{-1}	M_{n2} Nm	P_{n1} kW	Pt kW	P (IEC)								Rn_2 [N] MC/PC	MZ/PZ	HC	HZ	FZ	
1500	3/A 05L2	18.7	80	1920	17.7	—	—	—	80	90	100	112	132	—	—	10500	12000	21700	25700	5570	295
	3/A 05L2	22.1	68	2270	17.7	—	—	—	80	90	100	112	132	—	—	11100	12700	22800	27000	5880	295
	3/A 05L2	27.7	54	2850	17.7	—	—	—	80	90	100	112	132	—	—	12000	13700	24400	28900	6350	295
	3/A 05L2	32.2	47	3310	17.7	—	—	—	80	90	100	112	132	—	—	12600	14400	25500	30300	6670	295
	3/A 05L2	39.0	38	3020	13.3	—	—	—	80	90	100	112	132	—	—	13400	15300	27000	32000	7110	295
	3/A 05L2	44.0	34	3310	12.9	—	—	—	80	90	100	112	132	—	—	14000	15900	28000	33200	7400	295
	3/A 05L2	53.3	28.2	3040	9.8	—	—	—	80	90	100	112	132	—	—	14900	17000	29700	35200	7890	295
	3/A 05L2	57.0	26.3	3310	10.0	—	—	—	80	90	100	112	132	—	—	15200	17400	30300	35900	8070	295
	3/A 05L2	62.6	24.0	3220	8.9	—	—	—	80	90	100	112	132	—	—	15700	17900	31200	36900	8330	295
	3/A 05L2	72.5	20.7	3310	7.9	—	63	71	80	90	100	112	132	—	—	16500	18800	32600	38600	8740	295
	3/A 05L2	75.8	19.8	3060	7.0	—	—	—	80	90	100	112	132	—	—	16700	19100	33000	39100	8870	295
	3/A 05L2	85.6	17.5	3520	7.1	—	—	—	80	90	100	112	132	—	—	17400	19900	34200	40600	9240	295
	3/A 05L2	104	14.5	3080	5.1	—	—	—	80	90	100	112	132	—	—	18600	21200	36200	42900	9840	295
	3/A 05L2	121	12.4	3520	5.0	—	63	71	80	90	100	112	132	—	—	19600	22300	38000	45000	10400	295
	3/A 05L2	141	10.7	3600	4.4	—	63	71	80	90	100	112	132	—	—	20600	23500	39700	47100	10900	295
	3/A 05L2	162	9.2	2900	3.1	—	63	71	80	90	100	112	132	—	—	21000	24000	40500	48000	11400	295
	3/A 05L2	175	8.5	3600	3.5	—	63	71	80	90	100	112	132	—	—	21000	24000	40500	48000	11700	295
	3/A 05L2	212	7.1	3100	2.5	—	63	71	80	90	100	112	132	—	—	21000	24000	40500	48000	12500	295
	3/A 05L2	212	7.1	3100	2.5	—	63	71	80	90	100	112	132	—	—	21000	24000	40500	48000	12500	295
	3/A 05L2	241	6.2	4290	3.1	—	63	71	80	90	100	112	132	—	—	21000	24000	40500	48000	13000	295
	3/A 05L2	280	5.4	3600	2.2	—	63	71	80	90	100	112	132	—	—	21000	24000	40500	48000	13700	295
	3/A 05L2	329	4.6	3650	1.9	—	63	71	80	90	100	112	—	—	—	21300	24300	41000	48600	14500	295
	3/A 05L2	398	3.8	3180	1.4	—	63	71	80	90	100	112	—	—	—	21900	25000	42200	50000	15400	295
	3/A 05L2	422	3.6	4400	1.8	—	63	71	80	90	100	112	—	—	—	22100	25200	42500	50400	15700	295
	3/A 05L2	491	3.1	3880	1.4	—	63	71	80	90	100	112	—	—	—	22500	25800	43500	51500	16500	295
	3/A 05L2	594	2.5	3300	0.96	—	63	71	80	90	100	112	—	—	—	23200	26500	44700	52900	17600	295

3/A 06 L2 — 10840 Nm

n_1 min^{-1}		i	n_2 min^{-1}	M_{n2} Nm	P_{n1} kW	Pt kW	P (IEC)									Rn_2 [N] MC/PC	MZ/PZ	HC	HZ	FZ	
1500	3/A 06L2	27.7	54	3320	21	—	—	—	80	90	100	112	132	160	180	14200	16200	34300	39600	9250	307
	3/A 06L2	32.7	46	3920	21	—	—	—	80	90	100	112	132	160	180	15000	17200	36100	41700	9780	307
	3/A 06L2	34.9	43	3490	17.2	—	—	—	80	90	100	112	132	160	180	15400	17500	36800	42500	9990	307
	3/A 06L2	41.1	37	4910	21	—	—	—	80	90	100	112	132	160	180	16200	18500	38600	44600	10500	307
	3/A 06L2	47.2	32	3840	14.0	—	—	—	80	90	100	112	132	160	180	17000	19400	40300	46500	11000	307
	3/A 06L2	51.7	29.0	5170	17.2	—	—	—	80	90	100	112	132	160	180	17500	20000	41400	47800	11400	307
	3/A 06L2	55.7	26.9	4530	14.0	—	—	—	80	90	100	112	132	160	180	18000	20500	42300	48900	11700	307
	3/A 06L2	60.1	24.9	6010	17.2	—	—	—	80	90	100	112	132	160	180	18400	21000	43300	50000	12000	307
	3/A 06L2	69.9	21.5	5690	14.0	—	—	—	80	90	100	112	132	160	180	19400	22100	45300	52300	12600	307
	3/A 06L2	81.2	18.5	6480	13.8	—	—	—	80	90	100	112	132	160	180	20400	23200	47400	54700	13200	307
	3/A 06L2	88.5	16.9	6210	12.1	—	—	—	80	90	100	112	132	160	180	21000	23900	48700	56200	13600	307
	3/A 06L2	98.3	15.3	5380	9.4	—	—	—	80	90	100	112	132	160	180	21700	24800	50200	58000	14100	307
	3/A 06L2	112	13.4	6180	9.8	—	—	—	80	90	100	112	132	160	180	22700	25900	52200	60300	14700	307
	3/A 06L2	125	12.0	5440	7.5	—	—	—	80	90	100	112	132	160	180	23500	26800	53900	62200	15300	307
	3/A 06L2	141	10.7	7760	9.8	—	—	—	80	90	100	112	132	160	180	24500	27900	55900	64600	15900	307
	3/A 06L2	164	9.2	6500	7.1	—	—	—	80	90	100	112	132	160	180	25000	28500	57000	65800	16700	307
	3/A 06L2	190	7.9	7760	7.3	—	—	—	80	90	100	112	132	160	180	25000	28500	57000	65800	17600	307
	3/A 06L2	198	7.6	5500	4.9	—	—	—	80	90	100	112	132	160	180	25000	28500	57000	65800	17800	307
	3/A 06L2	221	6.8	6520	5.3	—	—	—	80	90	100	112	132	160	180	25000	28500	57000	65800	18500	307
	3/A 06L2	267	5.6	5500	3.7	—	—	—	80	90	100	112	132	160	180	25000	28500	57000	65800	19700	307
	3/A 06L2	276	5.4	7760	5.0	—	63	71	80	90	100	112	132	160	180	25000	28500	57000	65800	19900	307
	3/A 06L2	321	4.7	6610	3.7	—	63	71	80	90	100	112	132	160	180	25200	28800	57500	66400	20900	307
	3/A 06L2	388	3.9	5640	2.6	—	63	71	80	90	100	112	132	160	180	25900	29600	59100	68300	22300	307
	3/A 06L2	380	3.9	6180	2.9	—	63	71	80	90	100	112	132	160	180	25900	29500	59000	68100	22200	307
	3/A 06L2	435	3.5	7760	3.2	—	63	71	80	90	100	112	132	160	180	26400	30100	60100	69400	23200	307
	3/A 06L2	505	3.0	7150	2.5	—	63	71	80	90	100	112	132	160	180	26900	30700	61400	70900	24400	307
	3/A 06L2	555	2.7	7270	2.3	—	63	71	80	90	100	112	132	160	180	27300	31100	62200	71800	25100	307
	3/A 06L2	611	2.5	5920	1.7	—	63	71	80	90	100	112	132	160	180	27700	31600	63100	72800	25900	307
	3/A 06L2	671	2.2	6020	1.6	—	63	71	80	90	100	112	132	160	180	28000	32000	64000	73800	26800	307

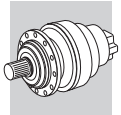

3/A 07 L2

15680 Nm

n_1 min^{-1}		i	n_2 min^{-1}	M_{n2} Nm	P_{n1} kW	Pt kW	P (IEC)									Rn_2 [N] MC/PC	MZ/PZ	HC	HZ	FZ	
1500	**3/A 07L2**	**27.1**	55	6650	42	—	—	—	—	—	—	—	132	160	180	17000	21200	40400	53100	11800	319
	3/A 07L2	**32.3**	46	7940	42	—	—	—	—	—	—	—	132	160	180	18000	22500	42600	56000	12500	319
	3/A 07L2	**41.5**	36	9620	40	—	—	—	—	—	—	—	132	160	180	19500	24400	45900	60400	13600	319
	3/A 07L2	**49.2**	30	8380	29	—	—	—	—	—	—	—	132	160	180	20700	25900	48300	63600	14400	319
	3/A 07L2	**57.3**	26.2	6650	20	—	—	—	80	90	100	112	132	160	180	21800	27200	50600	66500	15200	319
	3/A 07L2	**68.3**	22.0	7940	20	—	—	—	80	90	100	112	132	160	180	23100	28900	53300	70100	16100	319
	3/A 07L2	**87.7**	17.1	10200	20	—	—	—	80	90	100	112	132	160	180	25100	31400	57500	75600	17500	319
	3/A 07L2	**109**	13.8	8860	14.5	—	—	—	80	90	100	112	132	160	180	26900	33700	61300	80600	18800	319
	3/A 07L2	**130**	11.6	11100	15.2	—	—	—	80	90	100	112	132	160	180	28600	35700	64600	85000	19900	319
	3/A 07L2	**140**	10.7	11100	14.1	—	—	—	80	90	100	112	132	160	180	29300	36700	66200	87000	20400	319
	3/A 07L2	**155**	9.7	9000	10.3	—	—	—	80	90	100	112	132	160	180	30000	37500	67500	88800	21100	319
	3/A 07L2	**180**	8.3	10900	10.8	—	—	—	80	90	100	112	132	160	180	30000	37500	67500	88800	22200	319
	3/A 07L2	**198**	7.6	8700	7.8	—	—	—	80	90	100	112	132	160	180	30000	37500	67500	88800	22900	319
	3/A 07L2	**223**	6.7	9000	7.2	—	63	71	80	90	100	112	132	160	180	30000	37500	67500	88800	23800	319
	3/A 07L2	**241**	6.2	9000	6.6	—	63	71	80	90	100	112	132	160	180	30000	37500	67500	88800	24500	319
	3/A 07L2	**282**	5.3	8700	5.5	—	—	—	80	90	100	112	132	160	180	30000	37500	67500	88800	25800	319
	3/A 07L2	**341**	4.4	11500	6.0	—	63	71	80	90	100	112	132	160	180	30600	38200	68800	90400	27500	319
	3/A 07L2	**405**	3.7	9080	4.0	—	63	71	80	90	100	112	132	160	180	31300	39100	70500	92700	29100	319
	3/A 07L2	**439**	3.4	9180	3.7	—	63	71	80	90	100	112	132	160	180	31700	39600	71300	93800	29900	319

B

25.7 DATI TECNICI RIDUTTORI IN LINEA 300M L

Guida alla consultazione delle tabelle.

313M L	362	60940 Nm

	i	M_{n2} [Nm]						P_1	P_t	n_1	n_{1max}	M_b		M_{2max}
	1:	$n_2 \cdot h$ 10000	$n_2 \cdot h$ 25000	$n_2 \cdot h$ 50000	$n_2 \cdot h$ 100000	$n_2 \cdot h$ 500000	$n_2 \cdot h$ 1000000	[kW]	[kW]	[min^{-1}]	[min^{-1}]	[Nm]		[Nm]
L2	18.5	57130	48690	43150	41430	41090	33380	150	30	1500	2000	—	—	105000
	21.8	60940	57660	55630	50400	33620	27300	150	30	1500	2000	3200	6L	105000
	25.8	50810	48640	48640	48640	33200	26970	150	30	1500	2000	2100	6G	105000
	28.4	57130	48690	43150	41430	40470	32870	150	30	1500	2000	3200	6L	105000

1	Coppia di riferimento	7	Velocità angolare in entrata
2	Numero stadi (riduttori in esecuzione lineare)	8	Massima velocità angolare in entrata
3	Rapporto di riduzione	9	Coppia nominale del freno (freno idraulico)
4	Coppia nominale all'albero lento del riduttore, basata su: - fattore di servizio f_S=1 - $n_2 \cdot h$ indicato	10	Freno idraulico negativo a dischi multipli
		11	Coppia massima in uscita riduttore
5	Potenza massima trasmissibile all'albero veloce	12	Pagina delle dimensioni
6	Potenza termica riduttore		

C

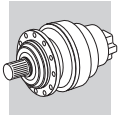

300 L | 246 | 1250 Nm

	i	M_{n2} [Nm]						P_1	P_t	n_1	n_{1max}	M_b		M_{2max}
	1:	$n_2 \cdot h$ 10000	$n_2 \cdot h$ 25000	$n_2 \cdot h$ 50000	$n_2 \cdot h$ 100000	$n_2 \cdot h$ 500000	$n_2 \cdot h$ 1000000	[kW]	[kW]	[min-1]	[min-1]	[Nm]		[Nm]
L1	3.48	760	730	730	730	730	730	20	7.5	2000	4000	260	4F	2000
	4.26	1250	1070	950	860	840	720	20	7.5	2000	4000	330	4H	2400
	5.77	860	730	650	650	650	630	20	7.5	2000	4000	260	4F	2400
	7.20	700	600	550	550	550	510	16.5	7.5	2000	4000	160	4D	2400
	9.00	460	390	370	370	370	370	8.9	7.5	2000	4000	160	4D	2400
L2	12.1	760	730	730	730	730	730	11.9	7.5	2000	4000	100	4B	2000
	14.8	1250	1070	950	860	840	720	12.6	7.5	2000	4000	100	4B	2000
	18.2	1250	1070	950	860	840	720	10.4	7.5	2000	4000	100	4B	2400
	20.1	860	730	650	650	650	630	7.2	7.5	2000	4000	100	4B	2000
	24.6	1250	1070	950	860	840	720	7.8	7.5	2000	4000	100	4B	2400
	30.7	1250	1070	950	860	840	720	6.4	7.5	2000	4000	50	4A	2400
	33.3	860	730	650	650	650	630	4.3	7.5	2000	4000	50	4A	2400
	38.4	1250	1070	950	860	840	720	5.2	7.5	2000	4000	50	4A	2400
	41.5	860	730	650	650	650	630	3.5	7.5	2000	4000	50	4A	2400
	51.9	860	730	650	650	650	630	2.9	7.5	2000	4000	50	4A	2400
	64.8	700	600	550	550	550	510	2.0	7.5	2000	4000	50	4A	2400
L3	51.6	1250	1070	950	860	840	720	4.2	7.5	2000	4000	50	4A	2000
	63.2	1250	1070	950	860	840	720	3.5	7.5	2000	4000	50	4A	2400
	69.9	860	730	650	650	650	630	2.4	7.5	2000	4000	50	4A	2000
	77.5	1250	1070	950	860	840	720	3.0	7.5	2000	4000	50	4A	2400
	85.6	1250	1070	950	860	840	720	2.7	7.5	2000	4000	50	4A	2400
	105	1250	1070	950	860	840	720	2.2	7.5	2000	4000	50	4A	2400
	116	860	730	650	650	650	630	1.6	7.5	2000	4000	50	4A	2400
	131	1250	1070	950	860	840	720	1.8	7.5	2000	4000	50	4A	2400
	142	1250	1070	950	860	840	720	1.6	7.5	2000	4000	50	4A	2400
	177	1250	1070	950	860	840	720	1.3	7.5	2000	4000	50	4A	2400
	192	860	730	650	650	650	630	1.0	7.5	2000	4000	50	4A	2400
	221	1250	1070	950	860	840	720	1.0	7.5	2000	4000	50	4A	2400
	240	860	730	650	650	650	630	0.82	7.5	2000	4000	50	4A	2400
	299	860	730	650	650	650	630	0.66	7.5	2000	4000	50	4A	2400
	374	860	730	650	650	650	630	0.53	7.5	2000	4000	50	4A	2400
L4	330	1250	1070	950	860	840	720	0.72	6	2000	4000	50	4A	2400
	403	860	730	650	650	650	630	0.50	6	2000	4000	50	4A	2400
	447	1250	1070	950	860	840	720	0.53	6	2000	4000	50	4A	2400
	494	1250	1070	950	860	840	720	0.48	6	2000	4000	50	4A	2400
	558	1250	1070	950	860	840	720	0.42	6	2000	4000	50	4A	2400
	616	1250	1070	950	860	840	720	0.38	6	2000	4000	50	4A	2400
	755	1250	1070	950	860	840	720	0.31	6	2000	4000	50	4A	2400
	819	1250	1070	950	860	840	720	0.29	6	2000	4000	50	4A	2400
	942	1250	1070	950	860	840	720	0.25	6	2000	4000	50	4A	2400
	1022	1250	1070	950	860	840	720	0.23	6	2000	4000	50	4A	2400
	1108	860	730	650	650	650	630	0.18	6	2000	4000	50	4A	2400
	1275	1250	1070	950	860	840	720	0.19	6	2000	4000	50	4A	2400
	1383	860	730	650	650	650	630	0.15	6	2000	4000	50	4A	2400
	1591	1250	1070	950	860	840	720	0.15	6	2000	4000	50	4A	2400
	1725	860	730	650	650	650	630	0.12	6	2000	4000	50	4A	2400
	2153	860	730	650	650	650	630	0.09	6	2000	4000	50	4A	2400
	2692	1000	1000	890	850	760	630	0.09	6	2000	4000	50	4A	2400

301 L | 256 | 2460 Nm

	i	M_{n2} [Nm]						P_1	P_t	n_1	n_{1max}	M_b		M_{2max}
	1:	$n_2 \cdot h$ 10000	$n_2 \cdot h$ 25000	$n_2 \cdot h$ 50000	$n_2 \cdot h$ 100000	$n_2 \cdot h$ 500000	$n_2 \cdot h$ 1000000	[kW]	[kW]	[min-1]	[min-1]	[Nm]		[Nm]
L1	3.48	1490	1430	1430	1430	1430	1300	30	7.5	2000	4000	440	4L	3400
	4.26	2460	2140	1890	1730	1580	1280	30	7.5	2000	4000	440	4L	3400
	5.77	1720	1460	1300	1300	1300	1240	30	7.5	2000	4000	400	4K	3400
	7.20	1150	1150	1150	1150	1150	940	30	7.5	2000	4000	260	4F	3400

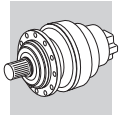

301 L

256

2460 Nm

	i	M_{n2} [Nm]						P_1	P_t	n_1	n_{1max}	M_b		M_{2max}
		$n_2 \cdot h$	$n_2 \cdot h$	$n_2 \cdot h$	$n_2 \cdot h$	$n_2 \cdot h$	$n_2 \cdot h$							
	1:	10000	25000	50000	100000	500000	1000000	[kW]	[kW]	[min-1]	[min-1]	[Nm]		[Nm]
L1	9.00	920	780	730	730	730	730	15.8	7.5	2000	4000	260	4F	3400
L2	12.1	1490	1430	1430	1430	1430	1300	23.9	7.5	2000	4000	160	4D	3400
	14.8	2460	2140	1890	1730	1580	1280	25.0	7.5	2000	4000	160	4D	3400
	18.2	2460	2140	1890	1730	1580	1280	20.7	7.5	2000	4000	160	4D	3400
	20.1	1720	1460	1300	1300	1300	1240	14.4	7.5	2000	4000	160	4D	3400
	24.6	2460	2140	1890	1730	1580	1280	15.6	7.5	2000	4000	160	4D	3400
	30.7	2000	2000	1830	1730	1580	1280	12.6	7.5	2000	4000	100	4B	3400
	33.3	1720	1460	1300	1300	1300	1240	8.7	7.5	2000	4000	100	4B	3400
	38.4	1600	1570	1570	1570	1530	1280	10.1	7.5	2000	4000	100	4B	3400
	41.5	1720	1460	1300	1300	1300	1240	7.0	7.5	2000	4000	100	4B	3400
	51.9	1720	1460	1300	1300	1300	1240	5.9	7.5	2000	4000	50	4A	3400
	64.8	1150	1150	1150	1150	1150	940	4.0	7.5	2000	4000	50	4A	3400
L3	51.6	2460	2140	1890	1730	1580	1280	8.3	7.5	2000	4000	50	4A	3400
	63.2	2460	2140	1890	1730	1580	1280	7.0	7.5	2000	4000	50	4A	3400
	69.9	1720	1460	1300	1300	1300	1240	4.7	7.5	2000	4000	50	4A	3400
	77.5	2460	2140	1890	1730	1580	1280	5.9	7.5	2000	4000	50	4A	3400
	85.6	2460	2140	1890	1730	1580	1280	5.4	7.5	2000	4000	50	4A	3400
	105	2460	2140	1890	1730	1580	1280	4.4	7.5	2000	4000	50	4A	3400
	116	1720	1460	1300	1300	1300	1240	3.1	7.5	2000	4000	50	4A	3400
	131	2460	2140	1890	1730	1580	1280	3.5	7.5	2000	4000	50	4A	3400
	142	2460	2140	1890	1730	1580	1280	3.2	7.5	2000	4000	50	4A	3400
	177	2460	2140	1890	1730	1580	1280	2.6	7.5	2000	4000	50	4A	3400
	192	1720	1460	1300	1300	1300	1240	2.0	7.5	2000	4000	50	4A	3400
	221	2000	2000	1830	1730	1580	1280	2.1	7.5	2000	4000	50	4A	3400
	240	1720	1460	1300	1300	1300	1240	1.6	7.5	2000	4000	50	4A	3400
	299	1720	1460	1300	1300	1300	1240	1.3	7.5	2000	4000	50	4A	3400
	374	1720	1460	1300	1300	1300	1240	1.0	7.5	2000	4000	50	4A	3400
L4	330	2460	2140	1890	1730	1580	1280	1.4	6	2000	4000	50	4A	3400
	403	1720	1460	1300	1300	1300	1240	1.00	6	2000	4000	50	4A	3400
	447	2460	2140	1890	1730	1580	1280	1.06	6	2000	4000	50	4A	3400
	494	2460	2140	1890	1730	1580	1280	0.96	6	2000	4000	50	4A	3400
	558	2460	2140	1890	1730	1580	1280	0.85	6	2000	4000	50	4A	3400
	616	2460	2140	1890	1730	1580	1280	0.77	6	2000	4000	50	4A	3400
	755	2460	2140	1890	1730	1580	1280	0.63	6	2000	4000	50	4A	3400
	819	2460	2140	1890	1730	1580	1280	0.58	6	2000	4000	50	4A	3400
	942	2460	2140	1890	1730	1580	1280	0.50	6	2000	4000	50	4A	3400
	1022	2460	2140	1890	1730	1580	1280	0.46	6	2000	4000	50	4A	3400
	1108	1720	1460	1300	1300	1300	1240	0.36	6	2000	4000	50	4A	3400
	1275	2460	2140	1890	1730	1580	1280	0.37	6	2000	4000	50	4A	3400
	1383	1720	1460	1300	1300	1300	1240	0.29	6	2000	4000	50	4A	3400
	1591	2000	2000	1830	1730	1580	1280	0.30	6	2000	4000	50	4A	3400
	1725	1720	1460	1300	1300	1300	1240	0.23	6	2000	4000	50	4A	3400
	2153	1720	1460	1300	1300	1300	1240	0.19	6	2000	4000	50	4A	3400
	2692	1720	1460	1300	1300	1300	1240	0.15	6	2000	4000	50	4A	3400

303 L

266

2970 Nm

	i	M_{n2} [Nm]						P_1	P_t	n_1	n_{1max}	M_b		M_{2max}
		$n_2 \cdot h$	$n_2 \cdot h$	$n_2 \cdot h$	$n_2 \cdot h$	$n_2 \cdot h$	$n_2 \cdot h$							
	1:	10000	25000	50000	100000	500000	1000000	[kW]	[kW]	[min-1]	[min-1]	[Nm]		[Nm]
L1	3.60	2410	2310	2310	2310	2310	2120	40	11	1800	3800	800	5G	5200
	4.25	2970	2810	2810	2650	2570	2090	40	11	1800	3800	800	5G	5200
	5.33	2850	2520	2230	2200	2140	2030	40	11	1800	3800	630	5E	5200
	6.20	2440	2080	1840	1820	1820	1820	40	11	1800	3800	500	5C	5200
	7.50	2000	1750	1650	1650	1650	1500	40	11	1800	3800	400	5B	5200
	9.67	1050	900	860	860	860	860	17.3	11	1800	3800	400	5B	5200
L2	12.5	2410	2310	2310	2310	2130	1730	20	9	2000	4000	260	4F	5200

C

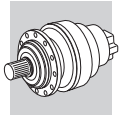

303 L — 266 — 2970 Nm

	i	M_{n2} [Nm]						P_1	P_t	n_1	n_{1max}	M_b		M_{2max}
		$n_2 \cdot h$	$n_2 \cdot h$	$n_2 \cdot h$	$n_2 \cdot h$	$n_2 \cdot h$	$n_2 \cdot h$							
	1:	10000	25000	50000	100000	500000	1000000	[kW]	[kW]	[min-1]	[min-1]	[Nm]		[Nm]
L2	15.3	2410	2310	2310	2310	2100	1700	20	9	2000	4000	260	4F	5200
	18.1	2970	2810	2810	2650	2350	1910	20	9	2000	4000	260	4F	5200
	20.8	2410	2210	2210	2210	2030	1650	20	9	2000	4000	160	4D	5200
	22.7	2850	2520	2230	2200	2140	2030	20	9	2000	4000	160	4D	5200
	24.5	2770	2700	2650	2620	2280	1850	20	9	2000	4000	160	4D	5200
	26.4	2440	2080	1840	1820	1820	1820	15.2	9	2000	4000	160	4D	5200
	30.8	2850	2520	2230	2200	2140	2030	15.9	9	2000	4000	160	4D	5200
	35.8	2440	2080	1840	1820	1820	1820	11.2	9	2000	4000	100	4B	5200
	38.4	2850	2450	2230	2200	2140	2030	12.8	9	2000	4000	100	4B	5200
	44.6	2440	2080	1840	1820	1820	1820	9.2	9	2000	4000	100	4B	5200
	55.8	2300	2080	1840	1820	1820	1820	7.6	9	2000	4000	100	4B	5200
L3	53.4	2410	2310	2310	2310	2100	1700	9.3	7.5	2000	4000	100	4B	5200
	63.1	2970	2810	2810	2650	2390	1940	9.8	7.5	2000	4000	100	4B	5200
	72.3	2410	2310	2310	2310	2130	1730	7.0	7.5	2000	4000	50	4A	5200
	77.2	2970	2810	2810	2650	2350	1910	8.2	7.5	2000	4000	50	4A	5200
	90.2	2410	2310	2310	2310	2130	1730	5.6	7.5	2000	4000	50	4A	5200
	105	2970	2810	2810	2650	2350	1910	6.2	7.5	2000	4000	50	4A	5200
	113	2440	2080	1840	1820	1820	1820	4.4	7.5	2000	4000	50	4A	5200
	124	2440	2080	1840	1820	1820	1820	4.0	7.5	2000	4000	50	4A	5200
	141	2770	2700	2650	2620	2280	1850	4.4	7.5	2000	4000	50	4A	5200
	152	2440	2080	1840	1820	1820	1820	3.4	7.5	2000	4000	50	4A	5200
	164	2850	2520	2230	2200	2140	2030	3.9	7.5	2000	4000	50	4A	5200
	178	2850	2520	2230	2200	2140	2030	3.6	7.5	2000	4000	50	4A	5200
	190	2440	2080	1840	1820	1820	1820	2.8	7.5	2000	4000	50	4A	5200
	220	2250	2200	2250	2250	1830	1800	2.3	7.5	2000	4000	50	4A	5200
	258	2440	2080	1840	1820	1820	1820	2.0	7.5	2000	4000	50	4A	5200
	276	2850	2450	2230	2200	2140	2030	2.4	7.5	2000	4000	50	4A	5200
	321	2440	2080	1840	1820	1820	1820	1.6	7.5	2000	4000	50	4A	5200
	389	2000	1750	1650	1650	1650	1500	1.2	7.5	2000	4000	50	4A	5200
	402	2440	2080	1840	1820	1820	1820	1.3	7.5	2000	4000	50	4A	5200
L4	413	2850	2520	2230	2200	2140	2030	1.6	6	2000	4000	50	4A	5200
	446	2970	2810	2810	2650	2350	1910	1.5	6	2000	4000	50	4A	5200
	492	2770	2700	2650	2620	2280	1850	1.3	6	2000	4000	50	4A	5200
	556	2970	2810	2810	2650	2350	1910	1.2	6	2000	4000	50	4A	5200
	649	2410	2310	2310	2310	2130	1730	0.84	6	2000	4000	50	4A	5200
	718	2440	2080	1840	1820	1820	1820	0.76	6	2000	4000	50	4A	5200
	816	2770	2700	2650	2620	2280	1850	0.80	6	2000	4000	50	4A	5200
	896	2440	2080	1840	1820	1820	1820	0.61	6	2000	4000	50	4A	5200
	1018	2770	2700	2650	2620	2280	1850	0.64	6	2000	4000	50	4A	5200
	1098	2440	2080	1840	1820	1820	1820	0.50	6	2000	4000	50	4A	5200
	1278	2850	2520	2230	2200	2140	2030	0.53	6	2000	4000	50	4A	5200
	1370	2440	2080	1840	1820	1820	1820	0.40	6	2000	4000	50	4A	5200
	1586	2250	2250	2250	2250	1830	1800	0.34	6	2000	4000	50	4A	5200
	1854	2440	2080	1840	1820	1820	1820	0.29	6	2000	4000	50	4A	5200
	1991	2850	2450	2230	2200	2140	2030	0.34	6	2000	4000	50	4A	5200
	2243	2000	1750	1650	1650	1650	1500	0.21	6	2000	4000	50	4A	5200
	2799	2000	1750	1650	1650	1650	1500	0.17	6	2000	4000	50	4A	5200

304 L — 278 — 3960 Nm

	i	M_{n2} [Nm]						P_1	P_t	n_1	n_{1max}	M_b		M_{2max}
		$n_2 \cdot h$	$n_2 \cdot h$	$n_2 \cdot h$	$n_2 \cdot h$	$n_2 \cdot h$	$n_2 \cdot h$							
	1:	10000	25000	50000	100000	500000	1000000	[kW]	[kW]	[min-1]	[min-1]	[Nm]		[Nm]
L1	3.60	3710	3520	3500	3440	3120	2830	50	12	1800	3800	800	5G	7300
	4.25	3960	3750	3690	3540	3430	2780	50	12	1800	3800	800	5G	7300
	5.33	3740	3190	2850	2850	2850	2710	50	12	1800	3800	630	5E	7300
	6.57	3000	2560	2390	2390	2390	2390	50	12	1800	3800	500	5C	7300
L2	12.5	3710	3520	3500	3440	3120	2830	30	9	2000	4000	260	4F	7300

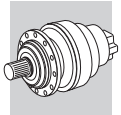

304 L — 278 — 3960 Nm

	i	M_{n2} [Nm]						P_1	P_t	n_1	n_{1max}	M_b		M_{2max}
		$n_2 \cdot h$	$n_2 \cdot h$	$n_2 \cdot h$	$n_2 \cdot h$	$n_2 \cdot h$	$n_2 \cdot h$							
	1:	10000	25000	50000	100000	500000	1000000	[kW]	[kW]	[min-1]	[min-1]	[Nm]		[Nm]
L2	15.3	3710	3520	3500	3440	3120	2830	30	9	2000	4000	260	4F	7300
	18.1	3960	3750	3690	3540	3430	2780	30	9	2000	4000	260	4F	7300
	20.8	3710	3520	3500	3440	3120	2830	30	9	2000	4000	160	4D	7300
	22.7	3740	3190	2850	2850	2850	2710	28	9	2000	4000	160	4D	7300
	24.5	3960	3750	3690	3540	3430	2780	30	9	2000	4000	160	4D	7300
	30.8	3740	3190	2850	2850	2850	2710	20	9	2000	4000	160	4D	7300
	38.4	3740	3190	2850	2850	2850	2710	16.2	9	2000	4000	160	4D	7300
	47.3	3000	2560	2390	2390	2390	2390	10.9	9	2000	4000	100	4B	7300
	59.1	3000	2560	2390	2390	2390	2390	8.9	9	2000	4000	100	4B	7300
L3	43.6	3710	3520	3500	3440	3120	2830	18.4	7.5	2000	4000	50	4A	7300
	53.4	3710	3520	3500	3440	3120	2830	15.1	7.5	2000	4000	50	4A	7300
	63.1	3960	3750	3690	3540	3430	2780	13.4	7.5	2000	4000	50	4A	7300
	72.3	3710	3520	3500	3440	3120	2830	11.2	7.5	2000	4000	50	4A	7300
	77.2	3960	3750	3690	3540	3430	2780	11.0	7.5	2000	4000	50	4A	7300
	90.2	3710	3520	3500	3440	3080	2830	9.0	7.5	2000	4000	50	4A	7300
	105	3960	3750	3690	3540	3430	2780	8.4	7.5	2000	4000	50	4A	7300
	111	3710	3520	3500	3440	3120	2830	7.5	7.5	2000	4000	50	4A	7300
	130	3960	3750	3690	3540	3430	2780	6.8	7.5	2000	4000	50	4A	7300
	141	3960	3750	3690	3540	3430	2780	6.3	7.5	2000	4000	50	4A	7300
	150	3710	3520	3500	3440	3120	2830	5.6	7.5	2000	4000	50	4A	7300
	165	3000	2560	2390	2390	2390	2390	3.8	7.5	2000	4000	50	4A	7300
	178	3740	3190	2850	2850	2850	2710	4.5	7.5	2000	4000	50	4A	7300
	202	3000	2560	2390	2390	2390	2390	3.1	7.5	2000	4000	50	4A	7300
	220	3960	3710	3660	3540	3430	2780	4.1	7.5	2000	4000	50	4A	7300
	273	3000	2560	2390	2390	2390	2390	2.3	7.5	2000	4000	50	4A	7300
	341	3000	2560	2390	2390	2390	2390	1.8	7.5	2000	4000	50	4A	7300
	426	3000	2560	2390	2390	2390	2390	1.5	7.5	2000	4000	50	4A	7300
L4	413	3740	3190	2850	2850	2850	2710	2.0	6	2000	4000	50	4A	7300
	446	3960	3750	3690	3540	3430	2780	2.1	6	2000	4000	50	4A	7300
	492	3960	3750	3690	3540	3430	2780	1.9	6	2000	4000	50	4A	7300
	556	3960	3750	3690	3540	3430	2780	1.7	6	2000	4000	50	4A	7300
	649	3710	3520	3500	3440	3120	2830	1.4	6	2000	4000	50	4A	7300
	702	3000	2560	2390	2390	2390	2390	0.93	6	2000	4000	50	4A	7300
	816	3960	3750	3690	3540	3430	2780	1.1	6	2000	4000	50	4A	7300
	1018	3960	3750	3690	3540	3430	2780	0.92	6	2000	4000	50	4A	7300
	1164	3000	2560	2390	2390	2390	2390	0.56	6	2000	4000	50	4A	7300
	1271	3960	3750	3690	3540	3430	2780	0.74	6	2000	4000	50	4A	7300
	1344	3710	3520	3500	3440	3080	2830	0.65	6	2000	4000	50	4A	7300
	1586	3960	3710	3660	3540	3430	2780	0.59	6	2000	4000	50	4A	7300
	1815	3000	2560	2390	2390	2390	2390	0.36	6	2000	4000	50	4A	7300
	1991	3740	3190	2850	2850	2850	2710	0.42	6	2000	4000	50	4A	7300
	2269	3000	2560	2390	2390	2390	2390	0.29	6	2000	4000	50	4A	7300
	2453	3000	2560	2390	2390	2390	2390	0.27	6	2000	4000	50	4A	7300

305 L — 290 — 5800 Nm

	i	M_{n2} [Nm]						P_1	P_t	n_1	n_{1max}	M_b		M_{2max}
		$n_2 \cdot h$	$n_2 \cdot h$	$n_2 \cdot h$	$n_2 \cdot h$	$n_2 \cdot h$	$n_2 \cdot h$							
	1:	10000	25000	50000	100000	500000	1000000	[kW]	[kW]	[min-1]	[min-1]	[Nm]		[Nm]
L1	3.60	4700	4490	4490	4490	4480	3640	60	13	1800	3800	1000	5K	8800
	4.25	5800	5500	5480	5300	4410	3580	60	13	1800	3800	1000	5K	8800
	5.33	5600	5040	4470	4400	4280	3490	60	13	1800	3800	1000	5K	8800
	6.20	4690	4000	3600	3600	3550	3460	60	13	1800	3800	800	5G	8800
	7.50	3800	3300	3100	3100	3000	2790	60	13	1800	3800	630	5E	8800
L2	12.5	4700	4490	4490	4490	3800	3090	30	9	2000	4000	400	4K	8800
	15.3	4700	4490	4490	4490	3750	3040	30	9	2000	4000	330	4H	8800
	18.1	5800	5500	5480	5300	4210	3420	30	9	2000	4000	400	4K	8800
	20.8	4700	4450	4430	4430	3630	2950	30	9	2000	4000	260	4F	8800

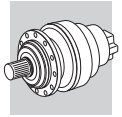

305 L — 290 — 5800 Nm

	i	M_{n2} [Nm]						P_1	P_t	n_1	n_{1max}	M_b		M_{2max}
		$n_2 \cdot h$	$n_2 \cdot h$	$n_2 \cdot h$	$n_2 \cdot h$	$n_2 \cdot h$	$n_2 \cdot h$							
	1:	10000	25000	50000	100000	500000	1000000	[kW]	[kW]	[min-1]	[min-1]	[Nm]		[Nm]
L2	22.7	5600	5040	4470	4400	4280	3490	30	9	2000	4000	330	4H	8800
	24.5	5530	5400	5300	5230	4070	3310	30	9	2000	4000	330	4H	8800
	26.4	4690	4000	3600	3600	3550	3460	30	9	2000	4000	260	4F	8800
	30.8	5600	5040	4470	4400	4280	3490	30	9	2000	4000	260	4F	8800
	35.8	4690	4000	3600	3600	3550	3460	22.4	9	2000	4000	160	4D	8800
	38.4	5600	4900	4470	4400	4280	3490	25.5	9	2000	4000	160	4D	8800
	44.6	4690	4000	3600	3600	3550	3460	18.3	9	2000	4000	160	4D	8800
	55.8	4430	4000	3600	3600	3500	3460	15.2	9	2000	4000	160	4D	8800
L3	53.4	4700	4490	4490	4490	3750	3040	18.8	7.5	2000	4000	100	4B	8800
	63.1	5800	5480	5480	5300	4270	3470	19.4	7.5	2000	4000	160	4D	8800
	72.3	4700	4490	4490	4490	3800	3090	14.1	7.5	2000	4000	100	4B	8800
	77.2	5800	5500	5480	5300	4210	3420	16.3	7.5	2000	4000	100	4B	8800
	90.2	4700	4490	4490	4490	3800	3090	11.4	7.5	2000	4000	100	4B	8800
	105	5800	5500	5480	5300	4210	3420	12.3	7.5	2000	4000	100	4B	8800
	113	4690	4000	3600	3600	3550	3460	8.7	7.5	2000	4000	100	4B	8800
	124	4690	4000	3600	3600	3550	3460	8.0	7.5	2000	4000	50	4A	8800
	141	5530	5350	5300	5230	4070	3310	8.9	7.5	2000	4000	100	4B	8800
	152	4690	4000	3600	3600	3550	3460	6.7	7.5	2000	4000	50	4A	8800
	164	5600	5040	4470	4400	4280	3490	7.7	7.5	2000	4000	50	4A	8800
	178	5600	5040	4470	4400	4280	3490	7.2	7.5	2000	4000	50	4A	8800
	190	4690	4000	3600	3600	3550	3460	5.5	7.5	2000	4000	50	4A	8800
	220	4750	4750	4750	4750	3660	3210	4.9	7.5	2000	4000	50	4A	8800
	258	4690	4000	3600	3600	3550	3460	4.1	7.5	2000	4000	50	4A	8800
	276	5600	4900	4470	4400	4280	3490	4.6	7.5	2000	4000	50	4A	8800
	321	4690	4000	3600	3600	3550	3460	3.3	7.5	2000	4000	50	4A	8800
	389	3800	3300	3100	3100	3000	2790	2.2	7.5	2000	4000	50	4A	8800
	402	4690	4000	3600	3600	3550	3460	2.6	6	2000	4000	50	4A	8800
L4	413	5600	5040	4470	4400	4280	3490	3.2	6	2000	4000	50	4A	8800
	446	5800	5500	5480	5300	4210	3420	3.1	6	2000	4000	50	4A	8800
	492	5530	5350	5300	5230	4070	3310	2.6	6	2000	4000	50	4A	8800
	556	5800	5500	5480	5300	4210	3420	2.5	6	2000	4000	50	4A	8800
	649	4700	4490	4490	4490	3800	3090	1.7	6	2000	4000	50	4A	8800
	718	4690	4000	3600	3600	3550	3460	1.5	6	2000	4000	50	4A	8800
	816	5530	5350	5300	5230	4070	3310	1.6	6	2000	4000	50	4A	8800
	896	4690	4000	3600	3600	3550	3460	1.2	6	2000	4000	50	4A	8800
	1018	5530	5350	5300	5230	4070	3310	1.3	6	2000	4000	50	4A	8800
	1098	4690	4000	3600	3600	3550	3460	0.99	6	2000	4000	50	4A	8800
	1278	5600	5040	4470	4400	4280	3490	1.0	6	2000	4000	50	4A	8800
	1370	4690	4000	3600	3600	3550	3460	0.79	6	2000	4000	50	4A	8800
	1586	4750	4750	4750	4750	3660	3210	0.71	6	2000	4000	50	4A	8800
	1854	4690	4000	3600	3600	3550	3460	0.59	6	2000	4000	50	4A	8800
	1991	5600	4900	4470	4400	4280	3490	0.67	6	2000	4000	50	4A	8800
	2243	3800	3300	3100	3100	3000	2790	0.40	6	2000	4000	50	4A	8800
	2799	3800	3300	3100	3100	3000	2790	0.32	6	2000	4000	50	4A	8800

306 L — 302 — 10840 Nm

	i	M_{n2} [Nm]						P_1	P_t	n_1	n_{1max}	M_b		M_{2max}
		$n_2 \cdot h$	$n_2 \cdot h$	$n_2 \cdot h$	$n_2 \cdot h$	$n_2 \cdot h$	$n_2 \cdot h$							
	1:	10000	25000	50000	100000	500000	1000000	[kW]	[kW]	[min-1]	[min-1]	[Nm]		[Nm]
L1	3.60	10840	10380	10380	10380	7100	5770	75	18	1600	3000	2600	6K	14900
	4.25	10420	9850	9850	9600	6990	5680	75	18	1600	3000	2600	6K	14900
	5.33	10080	9350	8300	7950	6810	5530	75	18	1600	3000	2100	6G	14900
	6.20	8630	7370	6530	6500	6460	5480	75	18	1600	3000	1500	6E	14900
	7.50	7000	5900	5500	5500	5040	5040	75	18	1600	3000	1100	6C	14900
L2	13.0	8020	8020	8020	8020	6210	5040	40	13	1800	3800	800	5G	14900
	15.3	9770	9340	9340	9300	6110	4960	40	13	1800	3800	800	5G	14900
	18.1	10420	9850	9850	9600	6860	5570	40	13	1800	3800	630	5E	14900

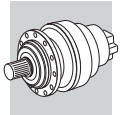

306 L

302

10840 Nm

	i	M_{n2} [Nm]						P_1	P_t	n_1	n_{1max}	M_b		M_{2max}
		$n_2 \cdot h$	$n_2 \cdot h$	$n_2 \cdot h$	$n_2 \cdot h$	$n_2 \cdot h$	$n_2 \cdot h$							
	1:	10000	25000	50000	100000	500000	1000000	[kW]	[kW]	[min-1]	[min-1]	[Nm]		[Nm]
L2	22.7	9560	9100	9100	9100	6680	5430	40	13	1800	3800	500	5C	14900
	26.4	7890	7590	7590	7590	6620	5380	40	13	1800	3800	400	5B	14900
	28.4	10080	9350	8300	7950	6810	5530	40	13	1800	3800	400	5B	14900
	33.1	9540	9350	8300	7950	6810	5530	40	13	1800	3800	400	5B	14900
	38.4	8630	7370	6530	6500	6460	5480	34	13	1800	3800	400	5B	14900
	46.5	8500	7370	6530	6500	6460	5480	29	13	1800	3800	400	5B	14900
	56.3	7000	5900	5500	5500	5040	5040	21	13	1800	3800	400	5B	14900
	72.5	6400	5900	5500	5500	5040	5040	16.3	13	1800	3800	400	5B	14900
L3	53.2	9770	9340	9340	9300	6110	4960	20	7.5	2000	4000	260	4F	14900
	65.2	9770	9340	9340	9300	6110	4960	20	7.5	2000	4000	160	4D	14900
	77.0	10420	9850	9850	9600	6860	5570	20	7.5	2000	4000	160	4D	14900
	81.9	8320	7700	7700	7530	5950	4830	20	7.5	2000	4000	160	4D	14900
	88.3	9450	9450	9450	9450	6970	5660	20	7.5	2000	4000	160	4D	14900
	104	10420	9850	9850	9600	6860	5570	20	7.5	2000	4000	160	4D	14900
	112	7890	7590	7590	7590	6620	5380	15.2	7.5	2000	4000	160	4D	14900
	121	10080	9350	8300	7950	6810	5530	17.2	7.5	2000	4000	100	4B	14900
	141	9540	9350	8300	7950	6810	5530	14.8	7.5	2000	4000	100	4B	14900
	152	7890	7590	7590	7590	6620	5380	11.3	7.5	2000	4000	100	4B	14900
	190	8630	7370	6530	6500	6460	5480	10.2	7.5	2000	4000	100	4B	14900
	205	10080	9350	8300	7950	6810	5530	10.6	7.5	2000	4000	100	4B	14900
	222	8630	7370	6530	6500	6460	5480	8.8	7.5	2000	4000	50	4A	14900
	238	9540	9350	8300	7950	6810	5530	9.0	7.5	2000	4000	50	4A	14900
	268	7000	5900	5500	5500	5040	5040	6.0	7.5	2000	4000	50	4A	14900
	288	7000	5900	5500	5500	5040	5040	5.6	7.5	2000	4000	50	4A	14900
	325	7000	5900	5500	5500	5040	5040	4.9	7.5	2000	4000	50	4A	14900
	405	7000	5900	5500	5500	5040	5040	4.0	7.5	2000	4000	50	4A	14900
L4	391	8630	7370	6530	6500	6460	5480	5.1	6	2000	4000	50	4A	14900
	444	10420	9850	9850	9600	6860	5570	5.3	6	2000	4000	50	4A	14900
	509	9450	9450	9450	9450	6970	5660	4.1	6	2000	4000	50	4A	14900
	589	10080	9350	8300	7950	6810	5530	3.8	6	2000	4000	50	4A	14900
	636	9450	9450	9450	9450	6970	5660	3.3	6	2000	4000	50	4A	14900
	700	10080	9350	8300	7950	6810	5530	3.2	6	2000	4000	50	4A	14900
	809	7890	7590	7590	7590	6620	5380	2.2	6	2000	4000	50	4A	14900
	877	7890	7590	7590	7590	6620	5380	2.0	6	2000	4000	50	4A	14900
	1015	9540	9350	8300	7950	6810	5530	2.2	6	2000	4000	50	4A	14900
	1095	7890	7590	7590	7590	6620	5380	1.6	6	2000	4000	50	4A	14900
	1279	8630	7370	6530	6500	6460	5480	1.6	6	2000	4000	50	4A	14900
	1475	10080	9350	8300	7950	6810	5530	1.5	6	2000	4000	50	4A	14900
	1597	8630	7370	6530	6500	6460	5480	1.3	6	2000	4000	50	4A	14900
	1843	10080	9350	8300	7950	6810	5530	1.2	6	2000	4000	50	4A	14900
	2074	7000	5900	5500	5500	5040	5040	0.80	6	2000	4000	50	4A	14900
	2337	7000	5900	5500	5500	5040	5040	0.71	6	2000	4000	50	4A	14900
	2916	7000	5900	5500	5500	5040	5040	0.57	6	2000	4000	50	4A	14900

307 L

314

15680 Nm

	i	M_{n2} [Nm]						P_1	P_t	n_1	n_{1max}	M_b		M_{2max}
		$n_2 \cdot h$	$n_2 \cdot h$	$n_2 \cdot h$	$n_2 \cdot h$	$n_2 \cdot h$	$n_2 \cdot h$							
	1:	10000	25000	50000	100000	500000	1000000	[kW]	[kW]	[min-1]	[min-1]	[Nm]		[Nm]
L1	3.43	9000	9000	9000	9000	8300	7960	115	22	1500	2500	3200	6L	18600
	4.09	15680	14890	14890	13510	9560	7770	115	22	1500	2500	3200	6L	21000
	5.25	14840	12700	11300	10790	9340	7590	115	22	1500	2500	3200	6L	21000
	6.23	11000	9600	8700	8700	8240	7490	115	22	1500	2500	2100	6G	21000
L2	12.3	9000	9000	9000	9000	8300	7960	60	18	1800	3800	1000	5K	18600
	14.7	15680	14890	14890	13510	9560	7770	60	18	1800	3800	800	5G	21000
	17.4	15680	14890	14890	13510	9560	7770	60	18	1800	3800	1000	5K	21000
	21.8	15680	14890	14890	13510	9560	7770	60	18	1800	3800	800	5G	21000
	25.4	14670	14010	14010	13510	9560	7770	60	18	1800	3800	630	5E	21000

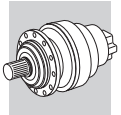

307 L — 314 — 15680 Nm

	i	M_{n2} [Nm]						P_1	P_t	n_1	n_{1max}	M_b		M_{2max}
		$n_2 \cdot h$	$n_2 \cdot h$	$n_2 \cdot h$	$n_2 \cdot h$	$n_2 \cdot h$	$n_2 \cdot h$							
	1:	10000	25000	50000	100000	500000	1000000	[kW]	[kW]	[min-1]	[min-1]	[Nm]		[Nm]
L2	28.0	14840	12700	11300	10790	9340	7590	60	18	1800	3800	500	5C	21000
	30.7	12300	12300	12300	12300	9560	7770	60	18	1800	3800	500	5C	21000
	32.6	14840	12700	11300	10790	9340	7590	60	18	1800	3800	500	5C	21000
	38.6	11000	9600	8700	8700	8240	7490	46	18	1800	3800	400	5B	21000
	46.7	11000	9600	8700	8700	8240	7490	39	18	1800	3800	400	5B	21000
L3	51.3	15680	14890	14890	13510	9560	7770	30	11	2000	4000	330	4H	21000
	60.5	15680	14890	14890	13510	9560	7770	30	11	2000	4000	330	4H	21000
	74.1	15680	14890	14890	13510	9560	7770	30	11	2000	4000	260	4F	21000
	80.6	14840	12700	11300	10790	9340	7590	30	11	2000	4000	260	4F	21000
	93.0	15680	14890	14890	13510	9560	7770	30	11	2000	4000	260	4F	21000
	100	15680	14890	14890	13510	9560	7770	30	11	2000	4000	260	4F	21000
	113	14840	12700	11300	10790	9340	7590	26	11	2000	4000	160	4D	21000
	126	15680	14890	14890	13510	9560	7770	26	11	2000	4000	160	4D	21000
	139	14840	12700	11300	10790	9340	7590	22	11	2000	4000	160	4D	21000
	146	15000	14010	14010	13510	9560	7770	23	11	2000	4000	160	4D	21000
	162	14840	12700	11300	10790	9340	7590	19.4	11	2000	4000	100	4B	21000
	177	12300	12300	12300	12300	9560	7770	15.9	11	2000	4000	100	4B	21000
	202	14840	12700	11300	10790	9340	7590	15.9	11	2000	4000	100	4B	21000
	221	15000	13800	12900	12500	9560	7770	15.6	11	2000	4000	100	4B	21000
	239	11000	9600	8700	8700	8240	7490	10.5	11	2000	4000	50	4A	21000
	284	14330	12700	11300	10790	9340	7590	11.3	11	2000	4000	50	4A	21000
	336	11000	9600	8700	8700	8240	7490	7.5	11	2000	4000	50	4A	21000
L4	349	15680	14890	14890	13510	9560	7770	10.2	7.5	2000	4000	50	4A	21000
	406	14840	12700	11300	10790	9340	7590	8.2	7.5	2000	4000	50	4A	21000
	465	14840	12700	11300	10790	9340	7590	7.1	7.5	2000	4000	50	4A	21000
	509	15000	14010	14010	13510	9560	7770	7.0	7.5	2000	4000	50	4A	21000
	579	15680	14890	14890	13510	9560	7770	6.1	7.5	2000	4000	50	4A	21000
	654	14840	12700	11300	10790	9340	7590	5.1	7.5	2000	4000	50	4A	21000
	722	15680	14890	14890	13510	9560	7770	4.9	7.5	2000	4000	50	4A	21000
	801	14840	12700	11300	10790	9340	7590	4.1	7.5	2000	4000	50	4A	21000
	906	15680	14890	14890	13510	9560	7770	3.9	7.5	2000	4000	50	4A	21000
	999	14840	12700	11300	10790	9340	7590	3.3	7.5	2000	4000	50	4A	21000
	1157	14840	12700	11300	10790	9340	7590	2.9	7.5	2000	4000	50	4A	21000
	1274	12300	12300	12300	12300	9560	7770	2.3	7.5	2000	4000	50	4A	21000
	1408	15680	14890	14890	13510	9560	7770	2.5	7.5	2000	4000	50	4A	21000
	1591	15000	13800	12900	12500	9560	7770	2.2	7.5	2000	4000	50	4A	21000
	1767	15680	14890	14890	13510	9560	7770	2.0	7.5	2000	4000	50	4A	21000
	2041	14330	12700	11300	10790	9340	7590	1.6	7.5	2000	4000	50	4A	21000
	2423	11000	9600	8700	8700	8240	7490	1.1	7.5	2000	4000	50	4A	21000

309 L — 326 — 23240 Nm

	i	M_{n2} [Nm]						P_1	P_t	n_1	n_{1max}	M_b		M_{2max}
		$n_2 \cdot h$	$n_2 \cdot h$	$n_2 \cdot h$	$n_2 \cdot h$	$n_2 \cdot h$	$n_2 \cdot h$							
	1:	10000	25000	50000	100000	500000	1000000	[kW]	[kW]	[min-1]	[min-1]	[Nm]		[Nm]
L1	3.43	13000	13000	13000	13000	12310	10920	150	25	1500	2000	3200	6L	27900
	4.09	23240	22070	22070	20260	13120	10660	150	25	1500	2000	3200	6L	29000
	5.25	21980	19060	16940	16190	12810	10410	150	25	1500	2000	3200	6L	29000
	6.23	17000	14400	13000	13000	12370	10280	150	25	1500	2000	3200	6L	29000
L2	12.3	13000	13000	13000	13000	10290	8360	60	18	1800	3800	1000	5K	27900
	14.7	17730	17730	17730	17730	11650	9460	60	18	1800	3800	1000	5K	29000
	17.4	21620	21260	21260	18580	11460	9310	60	18	1800	3800	1000	5K	29000
	21.8	18510	17500	17500	17140	11160	9070	60	18	1800	3800	1000	5K	29000
	25.4	14670	14300	14300	14300	11060	8990	60	18	1800	3800	800	5G	29000
	28.0	21980	19060	16940	16190	12810	10410	60	18	1800	3800	800	5G	29000
	32.6	18300	18100	16940	16190	12810	10410	60	18	1800	3800	630	5E	29000
	38.6	17000	14400	13000	13000	12370	10280	60	18	1800	3800	500	5C	29000
	46.7	17000	14400	13000	13000	12370	10280	58	18	1800	3800	400	5B	29000

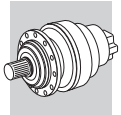

309 L

326

23240 Nm

	i	M_{n2} [Nm]						P_1	P_t	n_1	n_{1max}	M_b		M_{2max}
		$n_2 \cdot h$	$n_2 \cdot h$	$n_2 \cdot h$	$n_2 \cdot h$	$n_2 \cdot h$	$n_2 \cdot h$							
	1:	10000	25000	50000	100000	500000	1000000	[kW]	[kW]	[min-1]	[min-1]	[Nm]		[Nm]
L3	51.3	17730	17730	17730	17730	11650	9460	30	11	2000	4000	400	4K	29000
	60.5	21620	21260	21260	18580	11460	9310	30	11	2000	4000	400	4K	29000
	74.1	21620	21260	21260	18580	11460	9310	30	11	2000	4000	260	4F	29000
	80.6	21980	19060	16940	16190	12810	10410	30	11	2000	4000	260	4F	29000
	93.0	18510	17500	17500	17140	11160	9070	30	11	2000	4000	260	4F	29000
	100	21620	21260	21260	18580	11460	9310	30	11	2000	4000	260	4F	29000
	113	18300	18100	16940	16190	12810	10410	30	11	2000	4000	260	4F	29000
	126	18510	17500	17500	17140	11160	9070	30	11	2000	4000	260	4F	29000
	139	18300	18100	16940	16190	12810	10410	30	11	2000	4000	160	4D	29000
	162	21980	19060	16940	16190	12810	10410	29	11	2000	4000	160	4D	29000
	183	14670	14300	14300	14300	11060	8990	18.2	11	2000	4000	100	4B	29000
	202	21980	19060	16940	16190	12810	10410	23.9	11	2000	4000	100	4B	29000
	223	17000	14400	13000	13000	12370	10280	17.5	11	2000	4000	100	4B	29000
	239	17000	14400	13000	13000	12370	10280	16.3	11	2000	4000	100	4B	29000
	284	15800	15800	15800	15000	12810	10410	12.8	11	2000	4000	100	4B	29000
	336	17000	14400	13000	13000	12370	10280	11.6	11	2000	4000	100	4B	29000
L4	349	21620	21260	21260	18580	11460	9310	14.4	7.5	2000	4000	100	4B	29000
	406	21980	19060	16940	16190	12810	10410	12.3	7.5	2000	4000	50	4A	29000
	465	21980	19060	16940	16190	12810	10410	10.7	7.5	2000	4000	50	4A	29000
	509	14670	14300	14300	14300	11060	8990	6.7	7.5	2000	4000	50	4A	29000
	579	21620	21260	21260	18580	11460	9310	8.7	7.5	2000	4000	50	4A	29000
	654	18300	18100	16940	16190	12810	10410	6.6	7.5	2000	4000	50	4A	29000
	722	21620	21260	21260	18580	11460	9310	7.0	7.5	2000	4000	50	4A	29000
	801	18300	18100	16940	16190	12810	10410	5.4	7.5	2000	4000	50	4A	29000
	906	18510	17500	17500	17140	11160	9070	4.7	7.5	2000	4000	50	4A	29000
	999	18300	18100	16940	16190	12810	10410	4.3	7.5	2000	4000	50	4A	29000
	1149	17000	14400	13000	13000	12370	10280	3.5	7.5	2000	4000	50	4A	29000
	1286	17000	14400	13000	13000	12370	10280	3.1	7.5	2000	4000	50	4A	29000
	1380	17000	14400	13000	13000	12370	10280	2.9	7.5	2000	4000	50	4A	29000
	1605	17000	14400	13000	13000	12370	10280	2.5	7.5	2000	4000	50	4A	29000
	1723	17000	14400	13000	13000	12370	10280	2.3	7.5	2000	4000	50	4A	29000
	2003	17000	14400	13000	13000	12370	10280	1.9	7.5	2000	4000	50	4A	29000
	2423	17000	14400	13000	13000	12370	10280	1.7	7.5	2000	4000	50	4A	29000

310M L

338

33640 Nm

	i	M_{n2} [Nm]						P_1	P_t	n_1	n_{1max}	M_b		M_{2max}
		$n_2 \cdot h$	$n_2 \cdot h$	$n_2 \cdot h$	$n_2 \cdot h$	$n_2 \cdot h$	$n_2 \cdot h$							
	1:	10000	25000	50000	100000	500000	1000000	[kW]	[kW]	[min-1]	[min-1]	[Nm]		[Nm]
L1	4.09	33640	31900	29360	26490	21190	17220	175	35	1750	1800	—	—	47600
	5.25	30110	25640	22700	21660	20710	16820	175	35	1750	1800	—	—	47600
	6.23	23930	20350	18000	17810	17810	16620	175	35	1750	1800	—	—	47600
L2	14.7	33640	31900	29360	26490	18470	15000	75	22	1750	3000	2600	6K	47600
	17.4	33640	31900	29360	26490	18180	14770	75	22	1750	3000	2100	6G	47600
	21.8	33170	30650	29360	26490	17700	14380	75	22	1750	3000	2100	6G	47600
	25.4	26060	24860	24860	24860	17540	14250	75	22	1750	3000	1500	6E	47600
	28.0	30110	25640	22700	21660	20710	16820	75	22	1750	3000	1500	6E	47600
	30.7	19480	19330	19330	19330	17120	13900	75	22	1750	3000	1050	6C	47600
	32.6	30110	25640	22700	21660	20710	16820	75	22	1750	3000	1050	6C	47600
	38.6	23930	20350	18000	17810	17810	16620	75	22	1750	3000	850	6B	47600
	46.7	23930	20350	18000	17810	17810	16620	75	22	1750	3000	850	6B	47600
L3	53.0	30730	30730	29360	26160	16140	13110	40	18.0	1800	3800	630	5E	47600
	62.6	33640	31900	29360	25750	15890	12910	40	18.0	1800	3800	630	5E	47600
	73.9	33640	31900	29360	26490	17850	14500	40	18.0	1800	3800	500	5C	47600
	80.3	30110	25640	22700	21660	18920	15370	40	18.0	1800	3800	400	5B	47600
	92.7	33640	31900	29350	26250	17380	14110	40	18.0	1800	3800	400	5B	47600
	101	30110	25640	22700	21660	18420	14960	40	18.0	1800	3800	400	5B	47600
	108	28060	28060	28060	26500	17220	13990	40	18.0	1800	3800	400	5B	47600

C

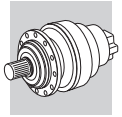

310M L

338

33640 Nm

	i	M_{n2} [Nm]						P_1	P_t	n_1	n_{1max}	M_b		M_{2max}
		$n_2 \cdot h$	$n_2 \cdot h$	$n_2 \cdot h$	$n_2 \cdot h$	$n_2 \cdot h$	$n_2 \cdot h$							
	1:	10000	25000	50000	100000	500000	1000000	[kW]	[kW]	[min-1]	[min-1]	[Nm]		[Nm]
L3	119	30110	25640	22700	21660	20710	16820	40	18.0	1800	3800	400	5B	47600
	135	33170	30640	29350	26500	17700	14380	40	18.0	1800	3800	400	5B	47600
	149	30110	25640	22700	21660	20710	16820	40	18.0	1800	3800	400	5B	47600
	164	27150	27150	27150	26490	17700	14380	34	18.0	1800	3800	400	5B	47600
	177	23930	20350	18000	17810	17810	16620	28	18.0	1800	3800	400	5B	47600
	202	30110	25640	22700	21660	20710	16820	31	18.0	1800	3800	400	5B	47600
	230	19480	19330	19330	19330	17120	13900	17.5	18.0	1800	3800	400	5B	47600
	249	23930	20350	18000	17810	17810	16620	20	18.0	1800	3800	400	5B	47600
	295	24820	24820	22700	21660	20380	16550	17.4	18.0	1800	3800	400	5B	47600
	350	23930	20350	18000	17810	17810	16620	14.1	18.0	1800	3800	400	5B	47600
L4	392	23930	20350	18000	17810	17810	16620	14.5	11.0	2000	4000	100	4B	47600
	453	28950	28950	28950	25070	15470	12570	15.1	11.0	2000	4000	100	4B	47600
	507	30110	25640	22700	21660	20710	16820	14.0	11.0	2000	4000	100	4B	47600
	590	30110	25640	22700	21660	20510	16600	12.1	11.0	2000	4000	100	4B	47600
	637	30110	25640	22700	21660	20710	16820	11.2	11.0	2000	4000	100	4B	47600
	726	30110	25640	22700	21660	18420	14960	9.8	11.0	2000	4000	50	4A	47600
	798	30110	25640	22700	21660	20510	16660	8.9	11.0	2000	4000	50	4A	47600
	974	33170	30640	29350	26500	17700	14380	8.1	11.0	2000	4000	50	4A	47600
	1002	30110	25640	22700	21660	20710	16820	7.1	11.0	2000	4000	50	4A	47600
	1164	30110	25640	22700	21660	20710	16820	6.1	11.0	2000	4000	50	4A	47600
	1259	24820	24820	22700	21660	20380	16550	4.7	11.0	2000	4000	50	4A	47600
	1438	23930	20350	18000	17810	17810	16620	3.9	11.0	2000	4000	50	4A	47600
	1672	23930	20350	18000	17810	17810	16620	3.4	11.0	2000	4000	50	4A	47600
	1794	23930	20350	18000	17810	17810	16620	3.2	11.0	2000	4000	50	4A	47600
	2022	23930	20350	18000	17810	17810	16620	2.8	11.0	2000	4000	50	4A	47600
	2523	23930	20350	18000	17810	17810	16620	2.2	11.0	2000	4000	50	4A	47600

C

311M L

350

49210 Nm

	i	M_{n2} [Nm]						P_1	P_t	n_1	n_{1max}	M_b		M_{2max}
		$n_2 \cdot h$	$n_2 \cdot h$	$n_2 \cdot h$	$n_2 \cdot h$	$n_2 \cdot h$	$n_2 \cdot h$							
	1:	10000	25000	50000	100000	500000	1000000	[kW]	[kW]	[min-1]	[min-1]	[Nm]		[Nm]
L1	4.09	49210	46590	45450	41050	30210	24540	200	35	1500	1800	—	—	58300
	5.25	47810	41400	36690	35010	29500	23960	200	35	1500	1800	—	—	58300
	6.23	36470	31040	27480	27190	27190	23670	200	35	1500	1800	—	—	58300
L2	14.0	32420	32420	32420	32420	25490	20710	115	26	1500	2500	3200	6L	58300
	16.7	49210	46590	45450	40310	24870	20200	115	26	1500	2500	3200	6L	58300
	18.0	41500	41400	36690	35010	29500	23960	115	26	1500	2500	2600	6K	58300
	21.5	47810	41400	36690	35010	23030	18700	115	26	1500	2500	2600	6K	58300
	25.5	33520	32020	32020	32020	23990	19490	115	26	1500	2500	1500	6E	58300
	27.6	47810	41400	36690	35010	28930	23490	115	26	1500	2500	2100	6G	58300
	32.7	41250	41170	36690	35010	28570	23200	115	26	1500	2500	1500	6E	58300
	38.8	36470	31040	27480	27190	27190	23670	115	26	1500	2500	1500	6E	58300
L3	50.5	32420	32420	32420	32420	25490	20710	60	18.0	1800	3800	800	5G	58300
	60.2	49210	46590	45450	40310	24870	20200	60	18.0	1800	3800	1000	5K	58300
	71.1	49210	46590	45450	40310	24870	20200	60	18.0	1800	3800	800	5G	58300
	77.3	47810	41400	36690	35010	29500	23960	60	18.0	1800	3800	800	5G	58300
	89.3	49210	46590	45450	40310	24870	20200	60	18.0	1800	3800	800	5G	58300
	104	49210	46590	45450	40310	24870	20200	60	18.0	1800	3800	800	5G	58300
	115	47810	41400	36690	35010	29500	23960	60	18.0	1800	3800	500	5C	58300
	133	47810	41400	36690	35010	29500	23960	60	18.0	1800	3800	400	5B	58300
	147	47810	41400	36690	35010	28930	23490	60	18.0	1800	3800	400	5B	58300
	161	47810	41400	36690	35010	29500	23960	60	18.0	1800	3800	400	5B	58300
	171	47810	41400	36690	35010	28930	23490	58	18.0	1800	3800	400	5B	58300
	191	33520	32020	32020	32020	23990	19490	36	18.0	1800	3800	400	5B	58300
	203	41250	41170	36690	35010	28570	23200	42	18.0	1800	3800	400	5B	58300
	245	41250	41170	36690	35010	28570	23200	35	18.0	1800	3800	400	5B	58300
	291	36470	31040	27480	27190	27190	23670	26	18.0	1800	3800	400	5B	58300

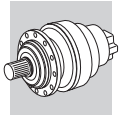

311M L — 350 — 49210 Nm

	i	M_{n2} [Nm]						P_1	P_t	n_1	n_{1max}	M_b		M_{2max}
	1:	$n_2 \cdot h$ 10000	$n_2 \cdot h$ 25000	$n_2 \cdot h$ 50000	$n_2 \cdot h$ 100000	$n_2 \cdot h$ 500000	$n_2 \cdot h$ 1000000	[kW]	[kW]	[min-1]	[min-1]	[Nm]		[Nm]
L3	291	34000	29500	27000	27000	18600	15100	24	11.0	1800	3800	400	5B	58300
									11.0					
L4	348	49210	46590	45450	39750	24530	19920	30	11.0	2000	4000	160	4D	58300
	410	49210	46590	45450	40310	24870	20200	28	11.0	2000	4000	160	4D	58300
	512	49210	46590	45450	40310	24870	20200	23	11.0	2000	4000	100	4B	58300
	568	47810	41400	36690	35010	29500	23960	19.9	11.0	2000	4000	100	4B	58300
	627	47810	41400	36690	35010	28930	23490	18.0	11.0	2000	4000	100	4B	58300
	825	47810	41400	36690	35010	29500	23960	13.7	11.0	2000	4000	100	4B	58300
	986	47810	41400	36690	35010	28930	23490	11.5	11.0	2000	4000	50	4A	58300
	1058	47810	41400	36690	35010	28930	23490	10.7	11.0	2000	4000	50	4A	58300
	1230	47810	41400	36690	35010	28930	23490	9.2	11.0	2000	4000	50	4A	58300
	1415	41250	41170	36690	35010	28570	23200	6.9	11.0	2000	4000	50	4A	58300
	1680	36470	31040	27480	27190	27190	23670	5.1	11.0	2000	4000	50	4A	58300
	1766	41250	41170	36690	35010	28570	23200	5.5	11.0	2000	4000	50	4A	58300
	2096	36470	31040	27480	27480	27480	23670	4.1	11.0	2000	4000	50	4A	58300
	1766	43000	39550	35220	32000	19700	16000	5.8	11.0	2000	4000	50	4A	58300
	2096	34000	29500	27000	27000	18600	15100	3.8	11.0	2000	4000	50	4A	58300

313M L — 362 — 60940 Nm

	i	M_{n2} [Nm]						P_1	P_t	n_1	n_{1max}	M_b		M_{2max}
	1:	$n_2 \cdot h$ 10000	$n_2 \cdot h$ 25000	$n_2 \cdot h$ 50000	$n_2 \cdot h$ 100000	$n_2 \cdot h$ 500000	$n_2 \cdot h$ 1000000	[kW]	[kW]	[min-1]	[min-1]	[Nm]		[Nm]
L1	4.14	60940	57660	55630	50400	42150	34240	250	45	1000	1300	—	—	105000
	5.40	57130	48690	43150	41430	41090	33380	250	45	1000	1300	—	—	105000
	6.50	40100	34160	30260	30200	30200	30200	250	45	1000	1300	—	—	105000
L2	14.2	48640	48640	48640	48640	35280	28650	150	30	1500	2000	—	—	105000
	16.9	60940	57660	55630	50400	34420	27960	150	30	1500	2000	—	—	105000
	18.5	57130	48690	43150	41430	41090	33380	150	30	1500	2000	—	—	105000
	21.8	60940	57660	55630	50400	33620	27300	150	30	1500	2000	3200	6L	105000
	25.8	50810	48640	48640	48640	33200	26970	150	30	1500	2000	2100	6G	105000
	28.4	57130	48690	43150	41430	40470	32870	150	30	1500	2000	3200	6L	105000
	33.6	57130	48690	43150	41430	39970	32460	150	30	1500	2000	2100	6G	105000
	40.5	40100	34160	30260	30200	30200	30200	133	30	1500	2000	1500	6E	105000
L3	51.1	48640	48640	48640	43750	27000	21930	60	18.0	1800	3800	—	—	105000
	61.0	60940	57660	55630	49510	30550	24820	60	18.0	1800	3800	—	—	105000
	72.0	60940	57660	55630	48740	30080	24430	60	18.0	1800	3800	1000	5K	105000
	78.3	60940	57660	55630	50400	33620	27300	60	18.0	1800	3800	1000	5K	105000
	92.4	60940	57660	55630	50400	33620	27300	60	18.0	1800	3800	800	5G	105000
	110	50810	48640	48640	48640	33200	26970	60	18.0	1800	3800	800	5G	105000
	120	57130	48690	43150	41430	40470	32870	60	18.0	1800	3800	500	5C	105000
	135	60940	57660	55630	50400	33620	27300	60	18.0	1800	3800	500	5C	105000
	143	57130	48690	43150	41430	39970	32460	60	18.0	1800	3800	500	5C	105000
	151	57130	48690	43150	41430	40470	32870	60	18.0	1800	3800	500	5C	105000
	163	54140	54140	54140	50400	33620	27300	60	18.0	1800	3800	400	5B	105000
	176	57130	48690	43150	41430	40470	32870	60	18.0	1800	3800	400	5B	105000
	182	40100	34160	30260	30200	30200	30200	46	18.0	1800	3800	400	5B	105000
	194	50810	48640	48640	48640	33200	26970	54	18.0	1800	3800	400	5B	105000
	209	57130	48690	43150	41430	39970	32460	57	18.0	1800	3800	400	5B	105000
	252	57130	48690	43150	41430	39970	32460	47	18.0	1800	3800	400	5B	105000
	304	40100	34160	30260	30200	30200	30200	27	18.0	1800	3800	400	5B	105000
									11.0					
L4	394	60940	57660	55630	50400	33620	27300	30	11.0	2000	4000	260	4F	105000
	452	60940	57660	55630	47760	29470	23940	30	11.0	2000	4000	160	4D	105000
	514	57130	48690	43150	41430	40470	32870	26	11.0	2000	4000	160	4D	105000
	564	54240	54240	54240	46390	28620	23250	23	11.0	2000	4000	160	4D	105000
	633	50810	48640	48640	48640	33200	26970	19.0	11.0	2000	4000	100	4B	105000
	695	57130	48690	43150	41430	39840	32360	19.4	11.0	2000	4000	100	4B	105000
	790	50810	48640	48640	48640	33200	26970	15.2	11.0	2000	4000	100	4B	105000

C

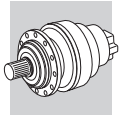

313M L

362

60940 Nm

	i	M_{n2} [Nm]						P_1	P_t	n_1	n_{1max}	M_b		M_{2max}
		$n_2 \cdot h$	$n_2 \cdot h$	$n_2 \cdot h$	$n_2 \cdot h$	$n_2 \cdot h$	$n_2 \cdot h$							
	1:	10000	25000	50000	100000	500000	1000000	[kW]	[kW]	[min-1]	[min-1]	[Nm]		[Nm]
L4	889	57130	48690	43150	41430	39970	32460	15.2	11.0	2000	4000	100	4B	105000
	1014	57130	48690	43150	41430	40470	32870	13.3	11.0	2000	4000	100	4B	105000
	1117	50810	48640	48640	48640	33200	26970	10.8	11.0	2000	4000	50	4A	105000
	1266	57130	48690	43150	41430	40470	32870	10.7	11.0	2000	4000	50	4A	105000
	1394	50810	48640	48640	48640	33200	26970	8.6	11.0	2000	4000	50	4A	105000
	1502	57130	48690	43150	41430	39970	32460	9.0	11.0	2000	4000	50	4A	105000
	1817	57130	48690	43150	41430	39970	32460	7.4	11.0	2000	4000	50	4A	105000
	2187	40100	34160	30260	30200	30200	30200	4.3	11.0	2000	4000	50	4A	105000
	2187	49000	42400	39000	39000	27700	22500	5.3	11.0	2000	4000	50	4A	105000

314M L

374

80640 Nm

	i	M_{n2} [Nm]						P_1	P_t	n_1	n_{1max}	M_b		M_{2max}
		$n_2 \cdot h$	$n_2 \cdot h$	$n_2 \cdot h$	$n_2 \cdot h$	$n_2 \cdot h$	$n_2 \cdot h$							
	1:	10000	25000	50000	100000	500000	1000000	[kW]	[kW]	[min-1]	[min-1]	[Nm]		[Nm]
L1	4.25	80640	75688	75688	71136	53888	43776	260	55	500	900	—	—	115000
	5.33	73304	67496	62304	59712	52048	42280	260	55	500	900	—	—	115000
	6.20	63256	54024	47944	47400	47400	41792	260	55	500	900	—	—	115000
L2	17.4	80640	75688	75688	71136	45288	36784	175	40	1500	1800	—	—	115000
	22.3	78024	72424	72424	71136	44248	35936	175	40	1500	1800	—	—	115000
	26.5	61848	59488	59488	59488	43712	35504	175	40	1500	1800	—	—	115000
	28.0	73304	67496	62304	59712	51864	42128	175	40	1500	1800	—	—	115000
	33.2	73304	67496	62304	59712	51240	41616	175	40	1500	1800	—	—	115000
	38.6	63256	54024	47944	47400	47400	41792	175	40	1500	1800	2100	6G	115000
L3	62.6	80640	75688	75688	63944	39456	32048	75	25	1600	3000	1500	6E	115000
	73.9	80640	75688	75688	62952	38840	31552	75	25	1600	3000	1500	6E	115000
	92.7	80640	75688	75464	61296	37824	30720	75	25	1600	3000	1500	6E	115000
	108	80640	75688	74784	60744	37480	30448	75	25	1600	3000	1500	6E	115000
	138	78024	72424	72424	71136	44248	35936	75	25	1600	3000	1500	6E	115000
	164	61848	59488	59488	59488	43712	35504	69	25	1600	3000	1050	6C	115000
	174	73304	67496	62304	59712	51864	42128	75	25	1600	3000	1050	6C	115000
	206	73304	67496	62304	59712	51240	41616	65	25	1600	3000	850	6B	115000
	240	63256	54024	47944	47400	47400	41792	48	25	1600	3000	850	6B	115000
L4	314	80640	75688	75688	61800	38128	30976	40	15.0	1800	3800	400	5B	115000
	394	80640	75696	74080	60176	37128	30160	40	15.0	1800	3800	400	5B	115000
	458	80640	75688	73416	59632	36800	29888	37	15.0	1800	3800	400	5B	115000
	495	80640	75688	75464	61296	37824	30720	35	15.0	1800	3800	400	5B	115000
	575	73304	67496	62304	59712	43136	35040	27	15.0	1800	3800	400	5B	115000
	588	78024	72424	72424	71136	44248	35936	28	15.0	1800	3800	400	5B	115000
	668	80640	75688	74784	60744	37480	30448	26	15.0	1800	3800	400	5B	115000
	738	78024	72424	72424	71136	44248	35936	23	15.0	1800	3800	400	5B	115000
	858	78024	72424	72424	71136	44248	35936	19	15.0	1800	3800	400	5B	115000
	926	73304	67496	62304	59712	51864	42128	16.9	15.0	1800	3800	400	5B	115000
	1038	78024	72424	72424	71136	44248	35936	16.0	15.0	1800	3800	400	5B	115000
	1099	73304	67496	62304	59712	51240	41616	14.2	15.0	1800	3800	400	5B	115000
	1277	73304	67496	62304	59712	51240	41616	12.2	15.0	1800	3800	400	5B	115000
	1485	63256	54024	47944	47400	47400	41792	9.1	15.0	1800	3800	400	5B	115000
	1796	63256	54024	47944	47400	47400	41792	7.5	15.0	1800	3800	400	5B	115000

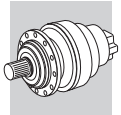

315M L

386

100800 Nm

	i	M_{n2} [Nm]						P_1	P_t	n_1	n_{1max}	M_b		M_{2max}
		$n_2 \cdot h$	$n_2 \cdot h$	$n_2 \cdot h$	$n_2 \cdot h$	$n_2 \cdot h$	$n_2 \cdot h$							
	1:	10000	25000	50000	100000	500000	1000000	[kW]	[kW]	[min-1]	[min-1]	[Nm]		[Nm]
L1	4.25	100800	94610	94610	88920	67360	54720	260	60	500	900	—	—	135000
	5.33	91630	84370	77880	74640	65060	52850	260	60	500	900	—	—	135000
	6.20	79070	67530	59930	59250	59250	52240	260	60	500	900	—	—	135000
L2	17.4	100800	94610	94610	88920	67360	54720	200	42	1500	1800	—	—	135000
	22.3	100800	94610	94610	88920	67360	54720	200	42	1500	1800	—	—	135000
	26.5	100800	94610	94610	88920	67360	54720	200	42	1500	1800	—	—	135000
	28.0	91630	84370	77880	74640	65060	52850	200	42	1500	1800	—	—	135000
	33.2	91630	84370	77880	74640	65060	52850	200	42	1500	1800	—	—	135000
	38.6	79070	67530	59930	59250	59250	52240	200	42	1500	1800	—	—	135000
L3	59.6	100800	94610	94610	88920	67360	54720	115	30	1500	2500	2600	6K	135000
	71.1	100800	94610	94610	88920	66430	53960	115	30	1500	2500	2100	6G	135000
	91.3	100800	94610	94610	88920	64880	52700	115	30	1500	2500	1500	6E	135000
	108	100800	94610	94610	88920	64070	52040	115	30	1500	2500	1100	6C	135000
	139	100800	94610	94610	88920	67360	54720	115	30	1500	2500	850	6B	135000
	165	100800	94610	94610	88920	67360	54720	105	30	1500	2500	850	6B	135000
	174	91630	84370	77880	74640	65060	52850	90	30	1500	2500	850	6B	135000
	207	91630	84370	77880	74640	65060	52850	76	30	1500	2500	850	6B	135000
	241	79070	67530	59930	59250	59250	52240	57	30	1500	2500	850	6B	135000
L4	302	100800	94610	94610	88920	66430	53960	60	18.0	1800	3800	400	5B	135000
	370	100800	94610	94610	88920	67360	54720	58	18.0	1800	3800	400	5B	135000
	441	100800	94610	94610	88920	66430	53960	49	18.0	1800	3800	400	5B	135000
	487	100800	94610	94610	88920	64880	52700	44	18.0	1800	3800	400	5B	135000
	533	100800	94610	94610	88920	66430	53960	40	18.0	1800	3800	400	5B	135000
	591	100800	94610	94610	88920	67360	54720	36	18.0	1800	3800	400	5B	135000
	672	100800	94610	94610	88920	64070	52040	32	18.0	1800	3800	400	5B	135000
	741	100800	94610	94610	88920	67360	54720	29	18.0	1800	3800	400	5B	135000
	862	100800	94610	94610	88920	67360	54720	25	18.0	1800	3800	400	5B	135000
	930	91630	84370	77880	74640	65060	52850	21	18.0	1800	3800	400	5B	135000
	1043	100800	94610	94610	88920	67360	54720	21	18.0	1800	3800	400	5B	135000
	1104	91630	84370	77880	74640	65060	52850	17.7	18.0	1800	3800	400	5B	135000
	1284	91630	84370	77880	74640	65060	52850	15.2	18.0	1800	3800	400	5B	135000
	1492	79070	67530	59930	59250	59250	52240	11.3	18.0	1800	3800	400	5B	135000
	1805	79070	67530	59930	59250	59250	52240	9.3	18.0	1800	3800	400	5B	135000

316M L

398

134390 Nm

	i	M_{n2} [Nm]						P_1	P_t	n_1	n_{1max}	M_b		M_{2max}
		$n_2 \cdot h$	$n_2 \cdot h$	$n_2 \cdot h$	$n_2 \cdot h$	$n_2 \cdot h$	$n_2 \cdot h$							
	1:	10000	25000	50000	100000	500000	1000000	[kW]	[kW]	[min-1]	[min-1]	[Nm]		[Nm]
L1	4.25	134390	126150	123700	118560	89820	72960	280	68	350	500	—	—	192000
	5.33	122190	111300	99520	99520	86750	70460	280	68	350	500	—	—	192000
L2	17.4	134390	126150	123700	118560	80680	65530	200	50	1500	1800	—	—	192000
	21.8	122190	111300	99520	99520	86750	70460	200	50	1500	1800	—	—	192000
	22.3	134390	126150	123700	118560	78790	64000	200	50	1500	1800	—	—	192000
	26.5	118110	113640	113640	113640	77820	63210	200	50	1500	1800	—	—	192000
	28.0	122190	111300	99520	99520	86750	70460	200	50	1500	1800	—	—	192000
	33.2	122190	111300	99520	99520	86750	70460	200	50	1500	1800	—	—	192000
L3	59.6	129890	126150	123700	110340	68080	55300	115	35	1500	2500	3200	6L	192000
	71.1	134390	126150	123700	107660	66430	53960	115	35	1500	2500	2600	6K	192000
	76.5	134390	126150	123700	118560	78790	64000	115	35	1500	2500	2100	6G	192000
	89.3	122190	111300	99520	99520	77870	63250	115	35	1500	2500	2100	6G	192000
	96.0	122190	111300	99520	99520	86750	70460	115	35	1500	2500	1500	6E	192000
	114	122190	111300	99520	99520	86750	70460	115	35	1500	2500	1500	6E	192000
	117	134390	126150	123700	118560	77250	62750	115	35	1500	2500	1500	6E	192000
	139	134390	126150	123700	118560	76300	61980	115	35	1500	2500	1500	6E	192000
	165	118110	113640	113640	113640	77820	63210	115	35	1500	2500	1100	6C	192000
L3	174	122190	111300	99520	99520	86750	70460	115	35	1500	2500	1100	6C	192000
	207	122190	111300	99520	99520	86750	70460	102	35	1500	2500	1100	6C	192000

C

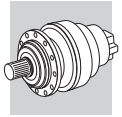

316M L

398

134390 Nm

	i	M_{n2} [Nm]						P_1	P_t	n_1	n_{1max}	M_b		M_{2max}
		$n_2 \cdot h$	$n_2 \cdot h$	$n_2 \cdot h$	$n_2 \cdot h$	$n_2 \cdot h$	$n_2 \cdot h$							
	1:	10000	25000	50000	100000	500000	1000000	[kW]	[kW]	[min-1]	[min-1]	[Nm]		[Nm]
L4	215	129890	126150	123700	110340	68080	55300	60	18.0	1800	3800	800	5G	192000
	253	129890	126150	123700	110340	68080	55300	60	18.0	1800	3800	800	5G	192000
	275	134390	126150	123700	118560	78790	64000	60	18.0	1800	3800	630	5E	192000
	318	129890	126150	123700	110340	68080	55300	60	18.0	1800	3800	630	5E	192000
	346	122190	111300	99520	99520	86750	70460	60	18.0	1800	3800	500	5C	192000
	399	122190	111300	99520	99520	79810	64830	60	18.0	1800	3800	400	5B	192000
	447	129890	126150	123700	107360	66240	53810	60	18.0	1800	3800	400	5B	192000
	500	134390	126150	123700	118560	76300	61980	57	18.0	1800	3800	400	5B	192000
	563	118110	113640	113640	113640	77820	63210	45	18.0	1800	3800	400	5B	192000
	628	122190	111300	99520	99520	86750	70460	41	18.0	1800	3800	400	5B	192000
	706	122190	111300	99520	99520	86750	70460	37	18.0	1800	3800	400	5B	192000
	784	122190	111300	99520	99520	86750	70460	33	18.0	1800	3800	400	5B	192000
	880	118110	113640	113640	113640	77820	63210	29	18.0	1800	3800	400	5B	192000
	1020	122190	111300	99520	99520	75110	61010	26	18.0	1800	3800	400	5B	192000
	1104	122190	111300	99520	99520	86750	70460	24	18.0	1800	3800	400	5B	192000
	1237	118110	113640	113640	113640	77820	63210	20	18.0	1800	3800	400	5B	192000
	1308	122190	111300	99520	99520	86750	70460	19.9	18.0	1800	3800	400	5B	192000
	1553	122190	111300	99520	99520	86750	70460	16.8	18.0	1800	3800	400	5B	192000

C

317M L

408

207490 Nm

	i	M_{n2} [Nm]						P_1	P_t	n_1	n_{1max}	M_b		M_{2max}
		$n_2 \cdot h$	$n_2 \cdot h$	$n_2 \cdot h$	$n_2 \cdot h$	$n_2 \cdot h$	$n_2 \cdot h$							
	1:	10000	25000	50000	100000	500000	1000000	[kW]	[kW]	[min-1]	[min-1]	[Nm]		[Nm]
L1	4.09	207490	196240	189230	171410	121500	98690	300	85	200	300	—	—	393000
	5.25	195640	167510	148950	142330	118660	96380	300	85	200	300	—	—	393000
	6.23	150260	128480	114130	112960	112960	95190	300	85	200	300	—	—	393000
L2	16.9	207490	196240	189230	171410	109610	89030	250	55	1000	1300	—	—	393000
	22.1	179820	166930	166930	166930	106860	86800	250	55	1000	1300	—	—	393000
	26.6	125790	121300	121300	121300	103860	84360	250	55	1000	1300	—	—	393000
	28.4	195640	167510	148950	142330	118660	96380	250	55	1000	1300	—	—	393000
	34.1	155950	155950	148950	142330	118660	96380	250	55	1000	1300	—	—	393000
	40.5	150260	128480	114130	112960	112960	95190	250	55	1000	1300	—	—	393000
L3	58.1	187760	187760	183040	148670	91740	74510	150	35	1500	2000	—	—	393000
	69.3	207490	196240	178590	145060	89510	72700	150	35	1500	2000	—	—	393000
	89.0	207490	196240	174410	141670	87410	71000	150	35	1500	2000	2600	6K	393000
	106	193690	193690	172260	139920	86340	70130	150	35	1500	2000	2100	6G	393000
	116	179820	166930	166930	166930	105230	85470	150	35	1500	2000	2100	6G	393000
	138	179820	166930	166930	166930	103930	84420	150	35	1500	2000	1500	6E	393000
	166	125790	121300	121300	121300	103860	84360	131	35	1500	2000	1100	6C	393000
	179	155950	155950	148950	142330	118660	96380	150	35	1500	2000	1100	6C	393000
	213	155950	155950	148950	142330	118660	96380	126	35	1500	2000	850	6B	393000
	252	150260	128480	114130	112960	112960	95190	102	35	1500	2000	850	6B	393000
L4	378	207500	196240	174410	141670	87410	71000	60	18.0	1800	3800	800	5G	393000
	449	193690	193690	172260	139920	86340	70130	60	18.0	1800	3800	500	5C	393000
	493	179820	166930	166930	166930	105230	85470	60	18.0	1800	3800	400	5B	393000
	552	207490	196240	174410	141670	87410	71000	60	18.0	1800	3800	400	5B	393000
	619	179820	166930	166930	166930	105230	85470	60	18.0	1800	3800	400	5B	393000
	719	179820	166930	166930	166930	105230	85470	53	18.0	1800	3800	400	5B	393000
	792	193690	193690	172260	139920	86340	70130	52	18.0	1800	3800	400	5B	393000
	904	155950	155950	148950	142330	118660	96380	37	18.0	1800	3800	400	5B	393000
	1032	179820	166930	166930	166930	103930	84420	37	18.0	1800	3800	400	5B	393000
	1134	155950	155950	148950	142330	118660	96380	29	18.0	1800	3800	400	5B	393000
	1318	155950	155950	148950	142330	118660	96380	25	18.0	1800	3800	400	5B	393000
	1595	155950	155950	148950	142330	118660	96380	21	18.0	1800	3800	400	5B	393000
	1893	150260	128480	114130	112960	112960	95190	16.9	18.0	1800	3800	400	5B	393000

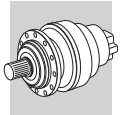

318M L

418

297550 Nm

	i	M_{n2} [Nm]						P_1	P_t	n_1	n_{1max}	M_b		M_{2max}
		$n_2 \cdot h$	$n_2 \cdot h$	$n_2 \cdot h$	$n_2 \cdot h$	$n_2 \cdot h$	$n_2 \cdot h$							
	1:	10000	25000	50000	100000	500000	1000000	[kW]	[kW]	[min-1]	[min-1]	[Nm]		[Nm]
L1	4.40	297550	260520	231720	223900	160590	130440	340	95	200	300	—	—	500000
L2	18.7	297550	260520	231720	223900	160590	130440	260	63	500	900	—	—	500000
	23.5	297550	260520	231720	223900	160590	130440	260	63	500	900	—	—	500000
	27.3	264700	256140	231720	223900	160590	130440	260	63	500	900	—	—	500000
L3	76.5	297550	260520	231720	223900	160590	130440	200	40	1500	1800	—	—	500000
	98.2	297550	260520	231720	223900	160590	130440	200	40	1500	1800	—	—	500000
	117	297550	260520	231720	223900	160590	130440	200	40	1500	1800	3200	6L	500000
	123	297550	260520	231720	223900	160590	130440	200	40	1500	1800	3200	6L	500000
	146	297550	260520	231720	223900	160590	130440	200	40	1500	1800	2600	6K	500000
	170	264700	256140	231720	223900	160590	130440	200	40	1500	1800	2100	6G	500000
L4	262	297550	260520	231720	223900	160590	130440	115	22	1500	2500	1500	6E	500000
	313	297550	260520	231720	223900	160590	130440	115	22	1500	2500	1100	6C	500000
	337	297550	260520	231720	223900	160590	130440	115	22	1500	2500	1100	6C	500000
	402	297550	260520	231720	223900	160590	130440	115	22	1500	2500	850	6B	500000
	422	297550	260520	231720	223900	160590	130440	115	22	1500	2500	850	6B	500000
	477	297550	260520	231720	223900	160590	130440	111	22	1500	2500	850	6B	500000
	515	297550	260520	231720	223900	160590	130440	102	22	1500	2500	850	6B	500000
	612	297550	260520	231720	223900	160590	130440	86	22	1500	2500	850	6B	500000
	647	297550	260520	231720	223900	160590	130440	82	22	1500	2500	850	6B	500000
	726	297550	260520	231720	223900	160590	130440	73	22	1500	2500	850	6B	500000
	768	297550	260520	231720	223900	160590	130440	69	22	1500	2500	850	6B	500000
	911	297550	260520	231720	223900	160590	130440	58	22	1500	2500	850	6B	500000
	1059	264700	256140	231720	223900	160590	130440	44	22	1500	2500	850	6B	500000

C

319 L

428

471190 Nm

	i	M_{n2} [Nm]						P_1	P_t	n_1	n_{1max}	M_b		M_{2max}
		$n_2 \cdot h$	$n_2 \cdot h$	$n_2 \cdot h$	$n_2 \cdot h$	$n_2 \cdot h$	$n_2 \cdot h$							
	1:	10000	25000	50000	100000	500000	1000000	[kW]	[kW]	[min-1]	[min-1]	[Nm]		[Nm]
L1	4.88	471190	383900	311830	253280	156280	126940	380	115	200	300	—	—	680000
	5.77	356270	305830	272430	249240	153790	124910	380	115	200	300	—	—	680000
L2	20.7	471190	383900	311830	253280	156280	126940	260	70	500	900	—	—	680000
	24.5	356270	305830	272430	249240	153790	124910	260	70	500	900	—	—	680000
	26.0	471190	383900	311830	253280	156280	126940	260	70	500	900	—	—	680000
	30.8	356270	305830	272430	249240	153790	124910	260	70	500	900	—	—	680000
	35.8	336430	305830	272430	249240	153790	124910	260	70	500	900	—	—	680000
L3	84.8	471190	383900	311830	253280	156280	126940	200	50	1500	1800	—	—	680000
	100	356270	305830	272430	249240	153790	124910	200	50	1500	1800	—	—	680000
	109	471190	383900	311830	253280	156280	126940	200	50	1500	1800	—	—	680000
	126	356270	305830	272430	249240	153790	124910	200	50	1500	1800	3200	6L	680000
	129	443030	383900	311830	253280	156280	126940	200	50	1500	1800	—	—	680000
	137	471190	383900	311830	253280	156280	126940	200	50	1500	1800	—	—	680000
	162	356270	305830	272430	249240	153790	124910	200	50	1500	1800	2600	6K	680000
	188	288420	284000	283990	253280	156280	126940	200	50	1500	1800	2100	6G	680000
	192	356270	305830	272430	249240	153790	124910	200	50	1500	1800	2100	6G	680000
	223	336430	305830	272430	249240	153790	124910	200	50	1500	1800	2100	6G	680000
L4	291	471190	383900	311830	253280	156280	126940	115	30	1500	2500	2100	6G	680000
	347	471190	383900	311830	253280	156280	126940	115	30	1500	2500	2100	6G	680000
	410	356270	305830	272430	249240	153790	124910	115	30	1500	2500	1100	6C	680000
	445	471190	383900	311830	253280	156280	126940	115	30	1500	2500	2100	6G	680000
	515	356270	305830	272430	249240	153790	124910	115	30	1500	2500	850	6B	680000
	528	406490	383900	311830	253280	156280	126940	115	30	1500	2500	850	6B	680000
	558	471190	383900	311830	253280	156280	126940	115	30	1500	2500	850	6B	680000
	571	443030	383900	311830	253280	156280	126940	115	30	1500	2500	850	6B	680000
	625	356270	305830	272430	249240	153790	124910	101	30	1500	2500	850	6B	680000
	678	433020	383900	311830	253280	156280	126940	113	30	1500	2500	850	6B	680000

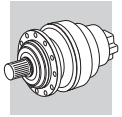

319 L — 428 — 471190 Nm

	i	M_{n2} [Nm]						P_1	P_t	n_1	n_{1max}	M_b		M_{2max}
		$n_2 \cdot h$	$n_2 \cdot h$	$n_2 \cdot h$	$n_2 \cdot h$	$n_2 \cdot h$	$n_2 \cdot h$							
	1:	10000	25000	50000	100000	500000	1000000	[kW]	[kW]	[min-1]	[min-1]	[Nm]		[Nm]
L4	717	471190	383900	311830	253280	156280	126940	115	30	1500	2500	850	6B	680000
	802	356270	305830	272430	249240	153790	124910	79	30	1500	2500	850	6B	680000
	850	438750	383900	311830	253280	156280	126940	92	30	1500	2500	850	6B	680000
	912	336430	305830	272430	249240	153790	124910	65	30	1500	2500	850	6B	680000
	1007	356270	305830	272430	249240	153790	124910	63	30	1500	2500	850	6B	680000
	1195	356270	305830	272430	249240	153790	124910	53	30	1500	2500	850	6B	680000
	1389	336430	305830	272430	249240	153790	124910	43	30	1500	2500	850	6B	680000

321 L — 438 — 655740 Nm

	i	M_{n2} [Nm]						P_1	P_t	n_1	n_{1max}	M_b		M_{2max}
		$n_2 \cdot h$	$n_2 \cdot h$	$n_2 \cdot h$	$n_2 \cdot h$	$n_2 \cdot h$	$n_2 \cdot h$							
	1:	10000	25000	50000	100000	500000	1000000	[kW]	[kW]	[min-1]	[min-1]	[Nm]		[Nm]
L1	4.44	655740	517290	420170	341290	210580	171050	540	115	200	300	—	—	934000
L2	18.2	655740	517290	420170	341290	210580	171050	300	95	200	300	—	—	934000
	23.3	655740	517290	420170	341290	210580	172000	300	95	200	300	—	—	934000
	27.7	536350	517290	420170	341290	210580	171050	300	95	200	300	—	—	934000
L3	75.3	655740	517290	420170	341290	210580	171050	250	60	1000	1200	—	—	934000
	98.2	655740	517290	420170	341290	210580	171050	250	60	1000	1200	—	—	934000
	118	655740	517290	420170	341290	210580	171050	250	60	1000	1200	—	—	934000
	126	655740	517290	420170	341290	210580	172000	250	60	1000	1200	—	—	934000
	152	655740	517290	420170	341290	210580	172000	250	60	1000	1200	—	—	934000
	180	536350	517290	420170	341290	210580	171050	250	60	1000	1200	—	—	934000
L4	258	655740	517290	420170	341290	210580	171050	150	35	1500	2000	2100	6G	934000
	308	655740	517290	420170	341290	210580	171050	150	35	1500	2000	2100	6G	934000
	395	655740	517290	420170	341290	210580	171050	150	35	1500	2000	2100	6G	934000
	469	655740	517290	420170	341290	210580	171050	150	35	1500	2000	1500	6E	934000
	515	655740	517290	420170	341290	210580	171050	150	35	1500	2000	1500	6E	934000
	612	655740	517290	420170	341290	210580	171050	150	35	1500	2000	1100	6C	934000
	736	655740	517290	420170	341290	210580	171050	130	35	1500	2000	850	6B	934000
	796	655740	517290	420170	341290	210580	172000	120	35	1500	2000	850	6B	934000
	945	655740	517290	420170	341290	210580	172000	101	35	1500	2000	850	6B	934000
	1122	536350	517290	420170	341290	210580	171050	79	35	1500	2000	850	6B	934000

323 L — 448 — 890310 Nm

	i	M_{n2} [Nm]						P_1	P_t	n_1	n_{1max}	M_b		M_{2max}
		$n_2 \cdot h$	$n_2 \cdot h$	$n_2 \cdot h$	$n_2 \cdot h$	$n_2 \cdot h$	$n_2 \cdot h$							
	1:	10000	25000	50000	100000	500000	1000000	[kW]	[kW]	[min-1]	[min-1]	[Nm]		[Nm]
L1	4.60	890310	829940	742050	602740	371910	302080	850	150	150	250	—	—	1580000
L2	19.6	890310	829940	742050	602740	371910	302080	380	130	200	300	—	—	1580000
	22.4	890310	829940	742050	602740	371910	302080	380	130	200	300	—	—	1580000
	26.5	890310	829940	742050	602740	371910	302080	380	130	200	300	—	—	1580000
	33.1	890310	829940	742050	602740	371910	302080	380	130	200	300	—	—	1580000
L3	83.3	890310	829940	742050	602740	371910	302080	260	90	500	800	—	—	1580000
	105	890310	829940	742050	602740	371910	302080	260	90	500	800	—	—	1580000
	113	890310	829940	742050	602740	371910	302080	260	90	500	800	—	—	1580000
	120	890310	829940	742050	602740	371910	302080	260	90	500	800	—	—	1580000
	142	890310	829940	742050	602740	371910	302080	260	90	500	800	—	—	1580000
	165	890310	829940	742050	602740	371910	302080	260	90	500	800	—	—	1580000
	205	890310	829940	742050	602740	371910	302080	210	90	500	800	—	—	1580000
L4	341	890310	829940	742050	602740	371910	302080	200	50	1500	1800	3200	6L	1580000
	390	890310	829940	742050	602740	371910	302080	200	50	1500	1800	3200	6L	1580000

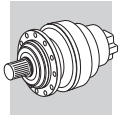

323 L

448

890310 Nm

	i	M_{n2} [Nm]						P_1	P_t	n_1	n_{1max}	M_b		M_{2max}
		$n_2 \cdot h$	$n_2 \cdot h$	$n_2 \cdot h$	$n_2 \cdot h$	$n_2 \cdot h$	$n_2 \cdot h$							
	1:	10000	25000	50000	100000	500000	1000000	[kW]	[kW]	[min-1]	[min-1]	[Nm]		[Nm]
L4	438	890310	829940	742050	602740	371910	302080	200	50	1500	1800	3200	6L	1580000
	500	890310	829940	742050	602740	371910	302080	200	50	1500	1800	3200	6L	1580000
	569	890310	829940	742050	602740	371910	302080	200	50	1500	1800	2600	6K	1580000
	628	890310	829940	742050	602740	371910	302080	200	50	1500	1800	2600	6K	1580000
	703	890310	829940	742050	602740	371910	302080	197	50	1500	1800	2600	6K	1580000
	758	890310	829940	742050	602740	371910	302080	182	50	1500	1800	2600	6K	1580000
	882	890310	829940	742050	602740	371910	302080	157	50	1500	1800	2600	6K	1580000
	1025	890310	829940	742050	602740	371910	302080	135	50	1500	1800	2600	6K	1580000
	1101	890310	829940	742050	602740	371910	302080	126	50	1500	1800	2600	6K	1580000
	1280	890310	829940	742050	602740	371910	302080	108	50	1500	1800	2600	6K	1580000

325 L

452

1286700 Nm

	i	M_{n2} [Nm]						P_1	P_t	n_1	n_{1max}	M_b		M_{2max}
		$n_2 \cdot h$	$n_2 \cdot h$	$n_2 \cdot h$	$n_2 \cdot h$	$n_2 \cdot h$	$n_2 \cdot h$							
	1:	10000	25000	50000	100000	500000	1000000	[kW]	[kW]	[min-1]	[min-1]	[Nm]		[Nm]
L1	4.60	1286700	1166950	947860	769900	475050	385860	1050	190	120	250	—	—	2000000
L2	19.6	1286600	1104050	896760	729000	449450	365060	380	160	200	300	—	—	2000000
	22.4	1286700	1083740	880270	715000	441180	358350	380	160	200	300	—	—	2000000
	26.5	1286700	1066430	866210	703580	434130	352630	380	160	200	300	—	—	2000000
	33.1	963170	963170	845000	686160	423380	343890	380	160	200	300	—	—	2000000
L3	83.3	1286600	1104050	896760	728400	449450	365060	260	115	500	800	—	—	2000000
	105	1286600	1104050	896760	728400	449450	365060	260	115	500	800	—	—	2000000
	113	1286700	1066430	866210	703580	434130	352630	260	115	500	800	—	—	2000000
	120	1286700	1083740	880270	715000	441180	358350	260	115	500	800	—	—	2000000
	142	1286700	1066430	866210	703580	434130	352630	260	115	500	800	—	—	2000000
	165	1286700	1066430	866210	703580	434130	352630	260	115	500	800	—	—	2000000
	205	963170	963170	845000	686160	423380	343890	226	115	500	800	—	—	2000000
L4	341	1286600	1104050	896760	728400	449450	365060	200	65	1500	1800	3200	6L	2000000
	390	1286700	1083740	880270	715000	441180	358350	200	65	1500	1800	3200	6L	2000000
	438	1286600	1104050	896760	728400	449450	365060	200	65	1500	1800	3200	6L	2000000
	500	1286700	1083740	880270	715000	441180	358350	200	65	1500	1800	3200	6L	2000000
	569	1286700	1083740	880270	715000	441180	358350	200	65	1500	1800	3200	6L	2000000
	628	1286700	1083740	880270	715000	441180	358350	200	65	1500	1800	3200	6L	2000000
	703	1286700	1066430	866210	703580	434130	352630	200	65	1500	1800	3200	6L	2000000
	758	1286600	1104050	896760	728400	449450	365060	200	65	1500	1800	2600	6K	2000000
	882	1286700	1066430	866210	703580	434130	352630	200	65	1500	1800	2600	6K	2000000
	1025	1286700	1066430	866210	703580	434130	352630	193	65	1500	1800	2600	6K	2000000
	1101	963170	963170	845120	686350	423550	343890	135	65	1500	1800	2600	6K	2000000
	1280	963170	963170	845120	686350	423550	343890	116	65	1500	1800	2600	6K	2000000

C

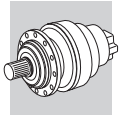

25.8 DATI TECNICI RIDUTTORI ANGOLARI 300M R

Guida alla consultazione delle tabelle.

310M R | 340 (12) | **33640 Nm** (1)

	i	M_{n2} [Nm]						P_1	P_t	n_1	n_{1max}	M_b		M_{2max}
	1:	$n_2 \cdot h$ 10000	$n_2 \cdot h$ 25000	$n_2 \cdot h$ 50000	$n_2 \cdot h$ 100000	$n_2 \cdot h$ 500000	$n_2 \cdot h$ 1000000	[kW]	[kW]	[min-1]	[min-1]	[Nm]		[Nm]
R2	12.0	24880	24320	24320	24320	15600	12670	130	55	1500	2500	3200	6L	47600
	15.4	30110	25640	22700	21660	18580	15090	130	55	1500	2500	2600	6K	47600
	18.3	23930	20350	18000	17810	17810	16620	130	55	1500	2500	2100	6G	47600
	16.6	33640	31900	29360	26500	17870	14510	130	55	1500	2500	2600	6K	47600
	21.3	30110	25640	22700	21660	20710	16820	130	55	1500	2500	2600	6K	47600
	(2)	(3)		(4)				(5)	(6)	(7)	(8)	(9)	(10)	(11)

1	Coppia di riferimento
2	Numero stadi (riduttori in esecuzione angolare)
3	Rapporto di riduzione
4	Coppia nominale all'albero lento del riduttore, basata su: - fattore di servizio f_S=1 - $n_2 \cdot h$ indicato
5	Potenza massima trasmissibile all'albero veloce
6	Potenza termica riduttore
7	Velocità angolare in entrata
8	Massima velocità angolare in entrata
9	Coppia nominale del freno (freno idraulico)
10	Freno idraulico negativo a dischi multipli
11	Coppia massima in uscita riduttore
12	Pagina delle dimensioni

C

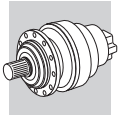

300 R

248

1250 Nm

	i	M_{n2} [Nm]						P_1	Pt	n_1	n_{1max}	M_b		M_{2max}
		$n_2 \cdot h$	$n_2 \cdot h$	$n_2 \cdot h$	$n_2 \cdot h$	$n_2 \cdot h$	$n_2 \cdot h$							
	1:	10000	25000	50000	100000	500000	1000000	[kW]	[kW]	[min-1]	[min-1]	[Nm]		[Nm]
R2	7.13	760	730	730	730	730	730	15.0	12	2000	4000	160	4D	2000
	8.74	1250	1070	950	860	840	720	15.0	12	2000	4000	160	4D	2400
	11.8	860	730	650	650	650	630	12.2	12	2000	4000	100	4B	2400
	14.8	700	600	550	550	550	510	8.3	12	2000	4000	100	4B	2400
	18.5	460	390	370	370	370	370	4.5	12	2000	4000	100	4B	2400
R3	24.8	760	730	730	730	730	730	6.2	12	2000	4000	50	4A	2000
	30.4	1250	1070	950	860	840	720	6.6	12	2000	4000	50	4A	2400
	37.3	1250	1070	950	860	840	720	5.5	12	2000	4000	50	4A	2400
	41.2	860	730	650	650	650	630	3.6	12	2000	4000	50	4A	2400
	50.4	1250	1070	950	860	840	720	4.3	12	2000	4000	50	4A	2400
	62.9	1250	1070	950	860	840	720	3.5	12	2000	4000	50	4A	2400
	68.2	860	730	650	650	650	630	2.4	12	2000	4000	50	4A	2400
	78.7	1250	1070	950	860	840	720	2.9	12	2000	4000	50	4A	2400
	85.2	860	730	650	650	650	630	2.0	12	2000	4000	50	4A	2400
	106	860	730	650	650	650	630	1.7	12	2000	4000	50	4A	2400
	133	700	600	550	550	550	510	1.2	12	2000	4000	50	4A	2400
R4	106	1250	1070	950	860	840	720	2.2	10	2000	4000	50	4A	2400
	130	1250	1070	950	860	840	720	1.8	10	2000	4000	50	4A	2400
	143	860	730	650	650	650	630	1.4	10	2000	4000	50	4A	2400
	159	1250	1070	950	860	840	720	1.5	10	2000	4000	50	4A	2400
	175	1250	1070	950	860	840	720	1.3	10	2000	4000	50	4A	2400
	215	1250	1070	950	860	840	720	1.1	10	2000	4000	50	4A	2400
	237	860	730	650	650	650	630	0.86	10	2000	4000	50	4A	2400
	268	1250	1070	950	860	840	720	0.88	10	2000	4000	50	4A	2400
	291	1250	1070	950	860	840	720	0.81	10	2000	4000	50	4A	2400
	363	1250	1070	950	860	840	720	0.65	10	2000	4000	50	4A	2400
	394	860	730	650	650	650	630	0.52	10	2000	4000	50	4A	2400
	453	1250	1070	950	860	840	720	0.52	10	2000	4000	50	4A	2400
	491	860	730	650	650	650	630	0.41	10	2000	4000	50	4A	2400
	613	860	730	650	650	650	630	0.33	10	2000	4000	50	4A	2400
	766	860	730	650	650	650	630	0.27	10	2000	4000	50	4A	2400

301 R

258

2060 Nm

	i	M_{n2} [Nm]						P_1	Pt	n_1	n_{1max}	M_b		M_{2max}
		$n_2 \cdot h$	$n_2 \cdot h$	$n_2 \cdot h$	$n_2 \cdot h$	$n_2 \cdot h$	$n_2 \cdot h$							
	1:	10000	25000	50000	100000	500000	1000000	[kW]	[kW]	[min-1]	[min-1]	[Nm]		[Nm]
R2	7.13	1490	1430	1430	1430	1430	1300	15.0	12	2000	4000	260	4F	3200
	8.74	2060	2060	1890	1730	1580	1280	15.0	12	2000	4000	330	4H	3200
	11.8	1720	1460	1300	1300	1300	1240	15.0	12	2000	4000	260	4F	3200
	14.8	1150	1150	1150	1150	1150	940	15.0	12	2000	4000	160	4D	3200
	18.5	920	780	740	740	740	740	8.0	12	2000	4000	160	4D	3200
R3	24.8	1490	1430	1430	1430	1430	1300	12.4	12	2000	4000	100	4B	3400
	30.4	2460	2140	1900	1730	1580	1280	13.1	12	2000	4000	100	4B	3400
	37.3	2460	2140	1900	1730	1580	1280	10.8	12	2000	4000	100	4B	3400
	41.2	1720	1460	1300	1300	1300	1240	7.3	12	2000	4000	100	4B	3400
	50.4	2460	2140	1900	1730	1580	1280	8.4	12	2000	4000	100	4B	3400
	62.9	2000	2000	1830	1730	1580	1280	7.0	12	2000	4000	50	4A	3400
	68.2	1720	1460	1300	1300	1300	1240	4.8	12	2000	4000	50	4A	3400
	78.7	1600	1600	1600	1600	1530	1280	5.8	12	2000	4000	50	4A	3400
	85.2	1720	1460	1300	1300	1300	1240	4.0	12	2000	4000	50	4A	3400
	106	1720	1460	1300	1300	1300	1240	3.3	12	2000	4000	50	4A	3400
	133	1150	1150	1150	1150	1150	940	2.0	12	2000	4000	50	4A	3400
R4	106	2460	2140	1900	1730	1580	1280	4.5	10	2000	4000	50	4A	3400
	130	2460	2140	1900	1730	1580	1280	3.6	10	2000	4000	50	4A	3400
	143	1720	1460	1300	1300	1300	1240	2.7	10	2000	4000	50	4A	3400
	159	2460	2140	1900	1730	1580	1280	3.0	10	2000	4000	50	4A	3400

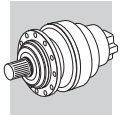

301 R

258

2060 Nm

	i	M_{n2} [Nm]						P_1	Pt	n_1	n_{1max}	M_b		M_{2max}
		$n_2 \cdot h$	$n_2 \cdot h$	$n_2 \cdot h$	$n_2 \cdot h$	$n_2 \cdot h$	$n_2 \cdot h$							
	1:	10000	25000	50000	100000	500000	1000000	[kW]	[kW]	[min-1]	[min-1]	[Nm]		[Nm]
R4	175	2460	2140	1900	1730	1580	1280	2.7	10	2000	4000	50	4A	3400
	215	2460	2140	1900	1730	1580	1280	2.2	10	2000	4000	50	4A	3400
	237	1720	1460	1300	1300	1300	1240	1.7	10	2000	4000	50	4A	3400
	268	2460	2140	1900	1730	1580	1280	1.8	10	2000	4000	50	4A	3400
	291	2460	2140	1900	1730	1580	1280	1.6	10	2000	4000	50	4A	3400
	363	2460	2140	1900	1730	1580	1280	1.3	10	2000	4000	50	4A	3400
	394	1720	1460	1300	1300	1300	1240	1.0	10	2000	4000	50	4A	3400
	453	2000	2000	1830	1730	1580	1280	1.0	10	2000	4000	50	4A	3400
	491	1720	1460	1300	1300	1300	1240	0.82	10	2000	4000	50	4A	3400
	613	1720	1460	1300	1300	1300	1240	0.66	10	2000	4000	50	4A	3400
	766	1720	1460	1300	1300	1300	1240	0.52	10	2000	4000	50	4A	3400

303 R

268

2970 Nm

	i	M_{n2} [Nm]						P_1	Pt	n_1	n_{1max}	M_b		M_{2max}
		$n_2 \cdot h$	$n_2 \cdot h$	$n_2 \cdot h$	$n_2 \cdot h$	$n_2 \cdot h$	$n_2 \cdot h$							
	1:	10000	25000	50000	100000	500000	1000000	[kW]	[kW]	[min-1]	[min-1]	[Nm]		[Nm]
R2	9.23	2410	2310	2310	2310	2310	1940	35	18	1800	3800	330	4H	5200
	10.9	2970	2810	2810	2650	2570	2090	35	18	1800	3800	330	4H	5200
	13.7	2850	2520	2230	2200	2140	2030	32	18	1800	3800	260	4F	5200
	15.9	2440	2080	1840	1820	1820	1820	23	18	1800	3800	260	4F	5200
	19.2	2000	1750	1650	1650	1650	1500	17.2	18	1800	3800	160	4D	5200
	24.8	1050	900	860	860	860	860	7.0	18	1800	3800	160	4D	5200
R3	25.7	2410	2310	2310	2310	2130	1730	15.0	14	2.000	4.000	160	4D	5200
	31.5	2410	2310	2310	2310	2100	1700	15.0	14	2.000	4.000	100	4B	5200
	37.1	2970	2810	2810	2650	2350	1910	15.0	14	2.000	4.000	100	4B	5200
	42.6	2410	2210	2210	2210	2030	1650	11.6	14	2.000	4.000	100	4B	5200
	46.6	2850	2520	2230	2200	2140	2030	11.2	14	2.000	4.000	100	4B	5200
	50.3	2770	2700	2650	2620	2280	1850	12.2	14	2.000	4.000	100	4B	5200
	54.2	2440	2080	1840	1820	1820	1820	8.1	14	2.000	4.000	100	4B	5200
	63.1	2850	2520	2230	2200	2140	2030	8.7	14	2.000	4.000	100	4B	5200
	73.3	2440	2080	1840	1820	1820	1820	6.2	14	2.000	4.000	50	4A	5200
	78.7	2850	2450	2230	2200	2140	2030	7.1	14	2.000	4.000	50	4A	5200
	91.5	2440	2080	1840	1820	1820	1820	5.2	14	2.000	4.000	50	4A	5200
	114	2300	2080	1840	1820	1820	1820	4.3	14	2.000	4.000	50	4A	5200
R4	129	2970	2810	2810	2650	2390	1940	5.1	12	2.000	4.000	50	4A	5200
	148	2410	2310	2310	2310	2130	1730	3.6	12	2.000	4.000	50	4A	5200
	158	2970	2810	2810	2650	2350	1910	4.3	12	2.000	4.000	50	4A	5200
	185	2410	2310	2310	2310	2130	1730	2.9	12	2.000	4.000	50	4A	5200
	214	2970	2810	2810	2650	2350	1910	3.2	12	2.000	4.000	50	4A	5200
	231	2440	2080	1840	1820	1820	1820	2.4	12	2.000	4.000	50	4A	5200
	255	2440	2080	1840	1820	1820	1820	2.1	12	2.000	4.000	50	4A	5200
	290	2770	2700	2650	2620	2280	1850	2.2	12	2.000	4.000	50	4A	5200
	313	2440	2080	1840	1820	1820	1820	1.7	12	2.000	4.000	50	4A	5200
	336	2850	2520	2230	2200	2140	2030	2.0	12	2.000	4.000	50	4A	5200
	364	2850	2520	2230	2200	2140	2030	1.9	12	2.000	4.000	50	4A	5200
	390	2440	2080	1840	1820	1820	1820	1.4	12	2.000	4.000	50	4A	5200
	452	2250	2250	2250	2250	1830	1800	1.2	12	2.000	4.000	50	4A	5200
	528	2440	2080	1840	1820	1820	1820	1.0	12	2.000	4.000	50	4A	5200
	567	2850	2450	2230	2200	2140	2030	1.2	12	2.000	4.000	50	4A	5200
	659	2440	2080	1840	1820	1820	1820	0.83	12	2.000	4.000	50	4A	5200
	797	2000	1750	1650	1650	1650	1500	0.59	12	2.000	4.000	50	4A	5200
	824	2440	2080	1840	1820	1820	1820	0.66	12	2.000	4.000	50	4A	5200

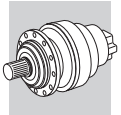

304 R — 280 — 3960 Nm

	i	M_{n2} [Nm]						P_1	Pt	n_1	n_{1max}	M_b		M_{2max}
		$n_2 \cdot h$	$n_2 \cdot h$	$n_2 \cdot h$	$n_2 \cdot h$	$n_2 \cdot h$	$n_2 \cdot h$							
	1:	10000	25000	50000	100000	500000	1000000	[kW]	[kW]	[min-1]	[min-1]	[Nm]		[Nm]
R2	9.23	3710	3520	3500	3220	2390	1940	35	18	1800	3800	330	4H	6600
	10.9	3960	3750	3690	3540	2680	2180	35	18	1800	3800	330	4H	6600
	13.7	3740	3190	2850	2850	2850	2560	35	18	1800	3800	260	4F	6600
	16.8	3000	2560	2390	2390	2390	2390	28	18	1800	3800	260	4F	6600
R3	25.7	3710	3520	3500	3440	3080	2830	15.0	14	2.000	4.000	160	4D	7300
	31.5	3710	3520	3500	3440	3080	2830	15.0	14	2.000	4.000	100	4B	7300
	37.1	3960	3750	3690	3540	3430	2780	15.0	14	2.000	4.000	100	4B	7300
	42.6	3710	3520	3500	3440	3120	2830	15.0	14	2.000	4.000	100	4B	7300
	46.6	3740	3190	2850	2850	2850	2710	14.2	14	2.000	4.000	100	4B	7300
	50.3	3960	3750	3690	3540	3430	2780	15.0	14	2.000	4.000	100	4B	7300
	63.1	3740	3190	2850	2850	2850	2710	10.9	14	2.000	4.000	100	4B	7300
	78.7	3740	3190	2850	2850	2850	2710	9.0	14	2.000	4.000	100	4B	7300
	97.0	3010	2560	2390	2390	2390	2390	5.9	14	2.000	4.000	50	4A	7300
	121	3010	2560	2390	2390	2390	2390	4.9	14	2.000	4.000	50	4A	7300
R4	89.4	3710	3520	3500	3440	3120	2830	9.4	12	2.000	4.000	50	4A	7300
	109	3710	3520	3500	3440	3120	2830	7.8	12	2.000	4.000	50	4A	7300
	129	3960	3750	3690	3540	3430	2780	7.1	12	2.000	4.000	50	4A	7300
	148	3710	3520	3500	3440	3120	2830	5.9	12	2.000	4.000	50	4A	7300
	158	3960	3750	3690	3540	3430	2780	5.9	12	2.000	4.000	50	4A	7300
	185	3710	3520	3500	3440	3080	2830	4.7	12	2.000	4.000	50	4A	7300
	214	3960	3750	3690	3540	3430	2780	4.4	12	2.000	4.000	50	4A	7300
	227	3710	3520	3500	3440	3120	2830	3.9	12	2.000	4.000	50	4A	7300
	267	3960	3750	3690	3540	3430	2780	3.5	12	2.000	4.000	50	4A	7300
	290	3960	3750	3690	3540	3430	2780	3.2	12	2.000	4.000	50	4A	7300
	307	3710	3520	3500	3440	3120	2830	2.9	12	2.000	4.000	50	4A	7300
	338	3010	2560	2390	2390	2390	2390	1.9	12	2.000	4.000	50	4A	7300
	364	3740	3190	2850	2850	2850	2710	2.3	12	2.000	4.000	50	4A	7300
	414	3010	2560	2390	2390	2390	2390	1.6	12	2.000	4.000	50	4A	7300
	452	3960	3710	3660	3540	3430	2780	2.1	12	2.000	4.000	50	4A	7300
	560	3010	2560	2390	2390	2390	2390	1.2	12	2.000	4.000	50	4A	7300
	699	3010	2560	2390	2390	2390	2390	0.93	12	2.000	4.000	50	4A	7300

305 R — 292 — 5600 Nm

	i	M_{n2} [Nm]						P_1	Pt	n_1	n_{1max}	M_b		M_{2max}
		$n_2 \cdot h$	$n_2 \cdot h$	$n_2 \cdot h$	$n_2 \cdot h$	$n_2 \cdot h$	$n_2 \cdot h$							
	1:	10000	25000	50000	100000	500000	1000000	[kW]	[kW]	[min-1]	[min-1]	[Nm]		[Nm]
R2	9.23	4650	4050	4000	3870	2390	1940	35	18	1800	3800	440	4L	7700
	10.9	5300	4720	4720	4350	2680	2180	35	18	1800	3800	440	4L	7700
	13.7	5600	5040	4470	4280	3150	2560	35	18	1800	3800	440	4L	7700
	15.9	4690	4000	3600	3600	3500	2840	35	18	1800	3800	330	4H	7700
	19.2	3800	3300	3100	3100	3000	2790	32	18	1800	3800	260	4F	7700
R3	25.7	4680	4490	4490	4490	3800	3090	15.0	14	2000	4000	260	4F	8800
	31.5	4700	4490	4490	4490	3750	3040	15.0	14	2000	4000	260	4F	8800
	37.1	5800	5500	5480	5300	4210	3420	15.0	14	2000	4000	260	4F	8800
	42.6	4700	4450	4430	4430	3630	2950	15.0	14	2000	4000	160	4D	8800
	46.6	5600	5040	4470	4400	4280	3490	15.0	14	2000	4000	160	4D	8800
	50.3	5530	5350	5300	5230	4070	3310	15.0	14	2000	4000	160	4D	8800
	54.2	4690	4000	3600	3600	3550	3460	15.0	14	2000	4000	100	4B	8800
	63.1	5600	5040	4470	4400	4280	3490	15.0	14	2000	4000	100	4B	8800
	73.3	4690	4000	3600	3600	3550	3460	12.3	14	2000	4000	100	4B	8800
	78.7	5600	4900	4470	4400	4280	3490	14.3	14	2000	4000	100	4B	8800
	91.5	4690	4000	3600	3600	3550	3460	10.2	14	2000	4000	100	4B	8800
	114	4430	4000	3600	3600	3500	3460	8.6	14	2000	4000	50	4A	8800
R4	129	5800	5480	5480	5300	4270	3470	10.3	12	2000	4000	50	4A	8800
	148	4700	4490	4490	4490	3800	3090	7.4	12	2000	4000	50	4A	8800
	158	5800	5500	5480	5300	4210	3420	8.6	12	2000	4000	50	4A	8800

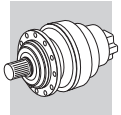

305 R

292

5600 Nm

	i	M_{n2} [Nm]						P_1	Pt	n_1	n_{1max}	M_b		M_{2max}
		$n_2 \cdot h$	$n_2 \cdot h$	$n_2 \cdot h$	$n_2 \cdot h$	$n_2 \cdot h$	$n_2 \cdot h$							
	1:	10000	25000	50000	100000	500000	1000000	[kW]	[kW]	[min-1]	[min-1]	[Nm]		[Nm]
R4	185	4700	4490	4490	4490	3800	3090	6.0	12	2000	4000	50	4A	8800
	214	5800	5500	5480	5300	4210	3420	6.4	12	2000	4000	50	4A	8800
	231	4690	4000	3600	3600	3550	3460	4.7	12	2000	4000	50	4A	8800
	255	4690	4000	3600	3600	3550	3460	4.3	12	2000	4000	50	4A	8800
	290	5530	5400	5300	5230	4070	3310	4.5	12	2000	4000	50	4A	8800
	313	4690	4000	3600	3600	3550	3460	3.5	12	2000	4000	50	4A	8800
	336	5600	5040	4470	4400	4280	3490	3.9	12	2000	4000	50	4A	8800
	364	5600	5040	4470	4400	4280	3490	3.6	12	2000	4000	50	4A	8800
	390	4690	4000	3600	3600	3550	3460	2.8	12	2000	4000	50	4A	8800
	452	4750	4750	4750	4750	3660	3210	2.5	12	2000	4000	50	4A	8800
	528	4690	4000	3600	3600	3550	3460	2.1	12	2000	4000	50	4A	8800
	567	5600	4900	4470	4400	4280	3490	2.3	12	2000	4000	50	4A	8800
	659	4690	4000	3600	3600	3550	3460	1.7	12	2000	4000	50	4A	8800
	797	3800	3300	3100	3100	3000	2790	1.1	12	2000	4000	50	4A	8800
	824	4690	4000	3600	3600	3550	3460	1.3	12	2000	4000	50	4A	8800

306 R

304

7300 Nm

	i	M_{n2} [Nm]						P_1	Pt	n_1	n_{1max}	M_b		M_{2max}
		$n_2 \cdot h$	$n_2 \cdot h$	$n_2 \cdot h$	$n_2 \cdot h$	$n_2 \cdot h$	$n_2 \cdot h$							
	1:	10000	25000	50000	100000	500000	1000000	[kW]	[kW]	[min-1]	[min-1]	[Nm]		[Nm]
R2	9.23	4650	4050	4000	3870	2390	1940	35	18	1800	3800	440	4L	12000
	10.9	5300	4720	4720	4350	2680	2180	35	18	1800	3800	440	4L	12000
	13.7	6500	5920	5920	5100	3150	2560	35	18	1800	3800	440	4L	12000
	15.9	7300	6890	6530	5670	3500	2840	35	18	1800	3800	440	4L	12000
	19.2	7000	5900	5500	5400	3990	3240	35	18	1800	3800	400	4K	12000
R3	33.2	8020	8020	8020	8020	5680	4620	35	14	2000	4000	260	4F	14900
	39.2	9770	9340	9340	9300	6110	4960	35	14	2000	4000	260	4F	14900
	46.3	10420	9850	9850	9600	6860	5570	35	14	2000	4000	260	4F	14900
	58.1	9560	9100	9100	9100	6680	5430	35	14	2000	4000	260	4F	14900
	67.5	7890	7590	7590	7590	6620	5380	25	14	2000	4000	260	4F	14900
	72.9	10080	9350	8300	7950	6810	5530	27	14	2000	4000	160	4D	14900
	84.7	9540	9350	8300	7950	6810	5530	23	14	2000	4000	160	4D	14900
	98.5	8630	7370	6530	6500	6460	5480	17.7	14	2000	4000	100	4B	14900
	119	8500	7370	6530	6500	6460	5480	15.2	14	2000	4000	100	4B	14900
	144	7000	5900	5500	5500	5040	5040	10.7	14	2000	4000	100	4B	14900
R4	158	10420	9850	9850	9600	6860	5570	14.9	12	2000	4000	100	4B	14900
	168	8320	7700	7700	7530	5950	4830	11.3	12	2000	4000	100	4B	14900
	181	9450	9450	9450	9450	6970	5660	11.6	12	2000	4000	100	4B	14900
	214	10420	9850	9850	9600	6860	5570	11.1	12	2000	4000	50	4A	14900
	230	7890	7590	7590	7590	6620	5380	7.7	12	2000	4000	50	4A	14900
	249	10080	9350	8300	7950	6810	5530	9.0	12	2000	4000	50	4A	14900
	289	9540	9350	8300	7950	6810	5530	7.6	12	2000	4000	50	4A	14900
	312	7890	7590	7590	7590	6620	5380	5.7	12	2000	4000	50	4A	14900
	389	8500	7590	7590	7590	6620	5380	5.2	12	2000	4000	50	4A	14900
	420	10080	9350	8300	7950	6810	5530	5.4	12	2000	4000	50	4A	14900
	455	8630	7370	6530	6500	6460	5480	4.4	12	2000	4000	50	4A	14900
	488	9540	9350	8300	7950	6810	5530	4.5	12	2000	4000	50	4A	14900
	550	8500	7370	6530	6500	6460	5480	3.7	12	2000	4000	50	4A	14900
	590	9500	8500	7800	7800	6810	5530	3.8	12	2000	4000	50	4A	14900
	665	7000	5900	5500	5500	5040	5040	2.5	12	2000	4000	50	4A	14900
	830	7000	5900	5500	5500	5040	5040	2.0	12	2000	4000	50	4A	14900

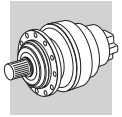

307 R | 316 | 14000 Nm

	i	M_{n2} [Nm]						P_1	Pt	n_1	n_{1max}	M_b		M_{2max}
		$n_2 \cdot h$	$n_2 \cdot h$	$n_2 \cdot h$	$n_2 \cdot h$	$n_2 \cdot h$	$n_2 \cdot h$							
	1:	10000	25000	50000	100000	500000	1000000	[kW]	[kW]	[min-1]	[min-1]	[Nm]		[Nm]
R2	13.0	9000	8500	8270	7960	6570	5340	85	35	1800	3800	1000	5K	18600
	15.5	11400	10690	9630	9520	7440	6040	85	35	1800	3800	1000	5K	21000
	19.8	14000	12700	11300	10790	8850	7190	85	35	1800	3800	800	5G	21000
	23.5	11000	9600	8700	8700	8240	7490	74	35	1800	3800	500	5C	21000
R3	31.6	9000	9000	9000	8300	5490	4460	35	22	2000	4000	400	4K	18600
	37.7	15680	14890	12400	10070	6210	5050	35	22	2000	4000	440	4L	21000
	44.6	15680	14890	13930	11310	6980	5670	35	22	2000	4000	400	4K	21000
	55.9	15680	14890	14890	13260	8180	6650	35	22	2000	4000	330	4H	21000
	65.0	14670	14010	14010	13510	9090	7380	35	22	2000	4000	260	4F	21000
	71.8	14840	12700	11300	10790	9340	7590	35	22	2000	4000	260	4F	21000
	78.6	12300	12300	12300	12300	9560	7770	35	22	2000	4000	260	4F	21000
	83.4	14840	12700	11300	10790	9340	7590	33	22	2000	4000	260	4F	21000
	99.0	11000	9600	8700	8700	8240	7490	23	22	2000	4000	160	4D	21000
	120	11000	9600	8700	8700	8240	7490	19.9	22	2000	4000	160	4D	21000
R4	152	15680	14890	14890	13510	9560	7770	15.0	15	2000	4000	100	4B	21000
	165	14840	12700	11300	10790	9340	7590	15.0	15	2000	4000	100	4B	21000
	191	15680	14890	14890	13510	9560	7770	15.0	15	2000	4000	100	4B	21000
	206	15680	14890	14890	13510	9560	7770	15.0	15	2000	4000	100	4B	21000
	232	14840	12700	11300	10790	9340	7590	14.3	15	2000	4000	100	4B	21000
	258	15680	14890	14890	13510	9560	7770	13.8	15	2000	4000	100	4B	21000
	284	14840	12700	11300	10790	9340	7590	11.6	15	2000	4000	100	4B	21000
	300	15000	14010	14010	13510	9560	7770	11.8	15	2000	4000	100	4B	21000
	331	14840	12700	11300	10790	9340	7590	10.0	15	2000	4000	50	4A	21000
	363	12300	12300	12300	12300	9560	7770	8.0	15	2000	4000	50	4A	21000
	413	14840	12700	11300	10790	9340	7590	8.0	15	2000	4000	50	4A	21000
	453	15000	13800	12900	12500	9560	7770	7.8	15	2000	4000	50	4A	21000
	490	11000	9600	8700	8700	8240	7490	5.3	15	2000	4000	50	4A	21000
	581	14330	12710	11300	10790	9340	7590	5.7	15	2000	4000	50	4A	21000
	690	11000	9600	8700	8700	8240	7490	3.8	15	2000	4000	50	4A	21000

309 R | 328 | 16460 Nm

	i	M_{n2} [Nm]						P_1	Pt	n_1	n_{1max}	M_b		M_{2max}
		$n_2 \cdot h$	$n_2 \cdot h$	$n_2 \cdot h$	$n_2 \cdot h$	$n_2 \cdot h$	$n_2 \cdot h$							
	1:	10000	25000	50000	100000	500000	1000000	[kW]	[kW]	[min-1]	[min-1]	[Nm]		[Nm]
R2	13.0	9800	9120	8270	7960	6570	5340	85	35	1800	3800	1000	5K	27400
	15.5	11400	10690	9630	9520	7440	6040	85	35	1800	3800	1000	5K	27400
	19.8	14000	13270	12270	12270	8850	7190	85	35	1800	3800	1000	5K	27400
	23.5	16460	14070	12500	12370	9980	8110	85	35	1800	3800	800	5G	27400
R3	31.6	12800	12310	10960	8900	5490	4460	35	22	2000	4000	440	4L	27900
	37.7	15830	15260	12400	10070	6210	5050	35	22	2000	4000	440	4L	29000
	44.6	18670	17150	13930	11310	6980	5670	35	22	2000	4000	400	4K	29000
	55.9	18510	17140	16330	13260	8180	6650	35	22	2000	4000	400	4K	29000
	65.0	14670	14300	14300	14010	9090	7380	35	22	2000	4000	260	4F	29000
	71.8	21980	19060	16940	15790	9740	7910	35	22	2000	4000	330	4H	29000
	83.4	18300	18100	16940	16190	10830	8790	35	22	2000	4000	260	4F	29000
	99.0	17000	14400	13000	13000	12210	9910	35	22	2000	4000	260	4F	29000
	120	17000	14400	13000	13000	12370	10280	30	22	2000	4000	160	4D	29000
R4	152	21620	21260	21260	18580	11460	9310	15.0	15	2000	4000	160	4D	29000
	165	21980	19060	16940	16190	12810	10410	15.0	15	2000	4000	160	4D	29000
	191	18510	17500	17500	17140	11160	9070	15.0	15	2000	4000	160	4D	29000
	206	21620	21260	21260	18580	11460	9310	15.0	15	2000	4000	160	4D	29000
	232	18300	18100	16940	16190	12810	10410	15.0	15	2000	4000	100	4B	29000
	258	18510	17500	17500	17140	11160	9070	15.0	15	2000	4000	100	4B	29000
	284	18300	18100	16940	16190	12810	10410	15.0	15	2000	4000	100	4B	29000
	331	21980	19060	16940	16190	12810	10410	15.0	15	2000	4000	100	4B	29000
	374	14670	14300	14300	14010	11060	8990	9.2	15	2000	4000	100	4B	29000

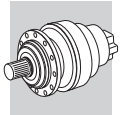

309 R — 328 — 16460 Nm

	i	M_{n2} [Nm]						P_1	Pt	n_1	n_{1max}	M_b		M_{2max}
		$n_2 \cdot h$	$n_2 \cdot h$	$n_2 \cdot h$	$n_2 \cdot h$	$n_2 \cdot h$	$n_2 \cdot h$							
	1:	10000	25000	50000	100000	500000	1000000	[kW]	[kW]	[min-1]	[min-1]	[Nm]		[Nm]
R4	413	21980	19060	16940	16190	12810	10410	12.0	15	2000	4000	100	4B	29000
	457	17000	14400	13000	13000	12370	10280	8.8	15	2000	4000	50	4A	29000
	490	17000	14400	13000	13000	12370	10280	8.2	15	2000	4000	50	4A	29000
	581	15800	15800	15800	15000	12810	10410	6.4	15	2000	4000	50	4A	29000
	690	17000	14400	13000	13000	12370	10280	5.8	15	2000	4000	50	4A	29000

310M R — 340 — 33640 Nm

	i	M_{n2} [Nm]						P_1	Pt	n_1	n_{1max}	M_b		M_{2max}
		$n_2 \cdot h$	$n_2 \cdot h$	$n_2 \cdot h$	$n_2 \cdot h$	$n_2 \cdot h$	$n_2 \cdot h$							
	1:	10000	25000	50000	100000	500000	1000000	[kW]	[kW]	[min-1]	[min-1]	[Nm]		[Nm]
R2	12.0	24880	24320	24320	24320	15600	12670	130	55	1500	2500	3200	6L	47600
	15.4	30110	25640	22700	21660	18580	15090	130	55	1500	2500	2600	6K	47600
	18.3	23930	20350	18000	17810	17810	16620	130	55	1500	2500	2100	6G	47600
	16.6	33640	31900	29360	26500	17870	14510	130	55	1500	2500	2600	6K	47600
	21.3	30110	25640	22700	21660	20710	16820	130	55	1500	2500	2600	6K	47600
	25.3	23930	20350	18000	17810	17810	16620	118	55	1500	2500	2100	6G	47600
R3	37.7	15800	14860	12070	9800	6050	4910	35	22	1800	3800	550	5C	47600
	44.6	18640	16690	13550	11010	6790	5520	35	22	1800	3800	550	5C	47600
	55.9	23360	19570	15890	12910	7960	6470	35	22	1800	3800	550	5C	47600
	65.0	26060	21740	17660	14340	8850	7190	35	22	1800	3800	550	5C	47600
	71.8	29930	23300	18920	15370	9480	7700	35	22	1800	3800	550	5C	47600
	78.6	19480	19330	19330	16390	10110	8210	35	22	1800	3800	330	4H	47600
	83.4	30110	25640	21030	17080	10540	8560	35	22	1800	3800	400	4K	47600
	99.0	23930	20350	18000	17810	11880	9650	35	22	1800	3800	330	4H	47600
	120	23930	20350	18000	17810	13580	11030	35	22	1800	3800	260	4F	47600
R4	136	30730	30730	28700	23310	14380	11680	35	15.0	2000	4000	260	4F	47600
	160	33640	31900	29360	25750	15890	12910	35	15.0	2000	4000	260	4F	47600
	189	33640	31900	29360	26500	17850	14500	35	15.0	2000	4000	260	4F	47600
	206	30110	25640	22700	21660	18920	15370	35	15.0	2000	4000	260	4F	47600
	238	33640	31900	29360	26500	17380	14110	33	15.0	2000	4000	160	4D	47600
	258	30110	25640	22700	21660	18420	14960	28	15.0	2000	4000	160	4D	47600
	276	28060	28070	28070	26500	17220	13990	24	15.0	2000	4000	160	4D	47600
	305	30110	25640	22700	21660	20710	16820	23	15.0	2000	4000	160	4D	47600
	347	33170	30650	29360	26500	17700	14380	22.6	15.0	2000	4000	160	4D	47600
	383	30110	25640	22700	21660	20710	16820	18.6	15.0	2000	4000	100	4B	47600
	454	23930	20350	18000	17810	17810	16620	12.5	15.0	2000	4000	100	4B	47600
	517	30110	25640	22700	21660	20710	16820	13.8	15.0	2000	4000	100	4B	47600
	590	19480	19330	19330	19330	17120	13900	7.8	15.0	2000	4000	50	4A	47600
	639	23930	20350	18000	17810	17810	16620	8.9	15.0	2000	4000	50	4A	47600
	757	24820	24820	22700	21660	20380	16550	7.8	15.0	2000	4000	50	4A	47600
	898	23930	20350	18000	17810	17810	16620	6.3	15.0	2000	4000	50	4A	47600

311M R — 352 — 49210 Nm

	i	M_{n2} [Nm]						P_1	Pt	n_1	n_{1max}	M_b		M_{2max}
		$n_2 \cdot h$	$n_2 \cdot h$	$n_2 \cdot h$	$n_2 \cdot h$	$n_2 \cdot h$	$n_2 \cdot h$							
	1:	10000	25000	50000	100000	500000	1000000	[kW]	[kW]	[min-1]	[min-1]	[Nm]		[Nm]
R2	12.0	24880	24320	24320	24320	15600	12670	150	75	1500	2500	3200	6L	58300
	15.4	31190	31190	31190	30110	18580	15090	150	75	1500	2500	3200	6L	58300
	18.3	36470	31040	27480	27190	20950	17020	150	75	1500	2500	2600	6K	58300
	16.6	45390	43900	35650	28960	17870	14510	150	90	1500	2500	3200	6L	58300
	21.3	47810	41400	36690	34490	21280	17280	150	90	1500	2500	2600	6K	58300
	25.3	36470	31040	27480	27190	23990	19490	150	90	1500	2500	2100	6G	58300

C

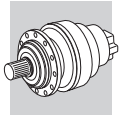

311M R | 352 | 49210 Nm

	i	M_{n2} [Nm]						P_1	Pt	n_1	n_{1max}	M_b		M_{2max}
		$n_2 \cdot h$	$n_2 \cdot h$	$n_2 \cdot h$	$n_2 \cdot h$	$n_2 \cdot h$	$n_2 \cdot h$							
	1:	10000	25000	50000	100000	500000	1000000	[kW]	[kW]	[min-1]	[min-1]	[Nm]		[Nm]
R3	53.0	32410	32420	32420	27690	17090	13880	85	40	2000	4000	800	5G	58300
	63.2	41360	39670	38580	31340	19340	15710	85	40	2000	4000	800	5G	58300
	68.0	41500	41400	36690	32980	20350	16530	85	40	2000	4000	800	5G	58300
	81.1	47810	41400	36690	35010	23030	18700	85	40	2000	4000	800	5G	58300
	96.3	33520	32020	32020	32020	23990	19490	77	40	2000	4000	500	5C	58300
	104	47810	41400	36690	35010	27420	22270	85	40	2000	4000	500	5C	58300
	124	41250	41170	36690	35010	28570	23200	77	40	2000	4000	400	5B	58300
	147	36470	31040	27480	27190	27190	23670	55	40	2000	4000	400	5B	58300
R4	154	49210	38650	31380	25490	15730	12780	35	22	2000	4000	400	5B	58300
	182	49210	43410	35250	28630	17670	14350	35	22	2000	4000	330	4H	58300
	198	47810	41400	36690	30360	18730	15220	35	22	2000	4000	260	4F	58300
	229	49210	46590	41340	33570	20710	16830	35	22	2000	4000	260	4F	58300
	266	49210	46590	45450	37310	23010	18700	35	22	2000	4000	260	4F	58300
	294	47810	41400	36690	35010	24670	20040	35	22	2000	4000	160	4D	58300
	341	47810	41400	36690	35010	27410	22260	33	22	2000	4000	160	4D	58300
	413	47810	41400	36690	35010	29500	23960	27	22	2000	4000	160	4D	58300
	438	47810	41400	36690	35010	28930	23490	26	22	2000	4000	100	4D	58300
	490	33520	32020	32020	32020	23990	19490	16.2	22	2000	4000	100	4B	58300
	520	41250	41170	36690	35010	28570	23200	18.8	22	2000	4000	100	4B	58300
	629	41250	41170	36690	35010	28570	23200	15.5	22	2000	4000	100	4B	58300
	746	36470	31040	27480	27190	27190	23670	11.6	22	2000	4000	100	4B	58300

C

313M R | 364 | 60940 Nm

	i	M_{n2} [Nm]						P_1	Pt	n_1	n_{1max}	M_b		M_{2max}
		$n_2 \cdot h$	$n_2 \cdot h$	$n_2 \cdot h$	$n_2 \cdot h$	$n_2 \cdot h$	$n_2 \cdot h$							
	1:	10000	25000	50000	100000	500000	1000000	[kW]	[kW]	[min-1]	[min-1]	[Nm]		[Nm]
R2	12.2	25160	24620	24620	24620	15740	12790	150	75	1500	2500	3200	6L	86300
	15.9	32070	32070	32070	30710	18950	15390	150	75	1500	2500	3200	6L	86300
	19.1	38580	34160	30260	30200	21580	17530	150	75	1500	2500	3200	6L	86300
	16.8	45900	44290	35970	29210	18030	14640	150	90	1500	2500	3200	6L	105000
	22.0	57130	48700	43150	35170	21700	17630	150	90	1500	2500	3200	6L	105000
	26.4	40100	34160	30260	30200	24710	20070	150	90	1500	2500	2600	6K	105000
R3	53.7	35830	33520	33520	27940	17240	14000	85	40	1800	3800	800	5G	105000
	64.0	41820	40180	38930	31620	19510	15850	85	40	1800	3800	800	5G	105000
	69.9	45180	44000	41410	33630	20750	16860	85	40	1800	3800	800	5G	105000
	82.2	52030	51920	46350	37650	23230	18870	85	40	1800	3800	800	5G	105000
	97.5	50810	48640	48640	42450	26190	21270	85	40	1800	3800	630	5E	105000
	107	57130	48700	43150	41440	27970	22720	85	40	1800	3800	630	5E	105000
	127	57130	48700	43150	41440	31530	25610	85	40	1800	3800	500	5C	105000
	153	40100	34160	30260	30200	30200	29160	53	40	1800	3800	400	5B	105000
R4	185	57650	43780	35560	28890	17820	14480	35	22	2000	4000	400	4K	105000
	201	60940	46420	37700	30630	18900	15350	35	22	2000	4000	400	4K	105000
	237	60940	52150	42350	34400	21230	17240	35	22	2000	4000	260	4F	105000
	281	50810	48640	47760	38780	23930	19440	35	22	2000	4000	260	4F	105000
	309	57130	48700	43150	41420	25550	20760	35	22	2000	4000	260	4F	105000
	346	60940	57660	55180	44810	27650	22460	35	22	2000	4000	260	4F	105000
	387	57130	48700	43150	41440	29970	24340	35	22	2000	4000	160	4D	105000
	450	57130	48700	43150	41440	33300	27040	30	22	2000	4000	160	4D	105000
	496	50810	48640	48640	48640	33200	26970	24	22	2000	4000	160	4D	105000
	535	57130	48700	43150	41440	37540	30490	25	22	2000	4000	160	4D	105000
	647	57130	48700	43150	41440	39970	32460	21	22	2000	4000	100	4B	105000
	778	40100	34160	30260	30200	30200	30200	12.2	22	2000	4000	100	4B	105000

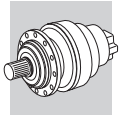

314M R

376

80640 Nm

	i	M_{n2} [Nm]						P_1	Pt	n_1	n_{1max}	M_b		M_{2max}
		$n_2 \cdot h$	$n_2 \cdot h$	$n_2 \cdot h$	$n_2 \cdot h$	$n_2 \cdot h$	$n_2 \cdot h$							
	1:	10000	25000	50000	100000	500000	1000000	[kW]	[kW]	[min-1]	[min-1]	[Nm]		[Nm]
R3	51.1	79616	75696	66528	54032	33344	27080	130	55	1500	2500	2100	6G	115000
	65.5	78024	72432	72432	64352	39704	32248	130	55	1500	2500	2100	6G	115000
	77.8	61848	59496	59488	59488	43712	35504	130	55	1500	2500	2100	6G	115000
	82.3	73312	67496	62304	59720	46544	37808	130	55	1500	2500	2100	6G	115000
	97.6	73304	67496	62304	59720	51240	41616	126	55	1500	2500	2100	6G	115000
	113	63256	54024	47944	47400	47400	41792	93	55	1500	2500	2100	6G	115000
	70.7	80640	75696	75696	61888	38176	31016	130	55	1500	2500	2100	6G	115000
	90.7	78016	72432	72432	71136	44248	35936	130	55	1500	2500	3200	6L	115000
	108	61848	59496	59488	59488	43712	35504	98	55	1500	2500	2600	6K	115000
	114	73312	67496	62304	59720	51864	42128	109	55	1500	2500	2600	6K	115000
	135	73304	67496	62304	59720	51240	41616	93	55	1500	2500	2100	6G	115000
	157	63256	54024	47944	47400	47400	41792	69	55	1500	2500	2100	6G	115000
R4	160	52250	39680	32230	26180	16160	13120	35	22	1800	3800	440	4L	115000
	189	58690	44570	36200	29410	18150	14740	35	22	1800	3800	440	4L	115000
	238	68810	52250	42440	34470	21270	17280	35	22	1800	3800	400	4K	115000
	276	76460	58060	47160	38310	23640	19200	35	22	1800	3800	400	4K	115000
	354	91050	69130	56160	45620	28150	22870	35	22	1800	3800	400	4K	115000
	421	77310	74370	63340	51430	31730	25780	31	22	1800	3800	330	4H	115000
	445	73312	64864	52664	42784	26400	21448	35	22	1800	3800	400	4K	115000
	528	73312	67496	59400	48232	29760	24176	30	22	1800	3800	330	4H	115000
	614	63256	54024	47944	47400	33080	26864	22	22	1800	3800	260	4F	115000

C

315M R

388

100800 Nm

	i	M_{n2} [Nm]						P_1	Pt	n_1	n_{1max}	M_b		M_{2max}
		$n_2 \cdot h$	$n_2 \cdot h$	$n_2 \cdot h$	$n_2 \cdot h$	$n_2 \cdot h$	$n_2 \cdot h$							
	1:	10000	25000	50000	100000	500000	1000000	[kW]	[kW]	[min-1]	[min-1]	[Nm]		[Nm]
R3	51.1	99510	94620	83160	67540	41680	33850	150	75	1500	2500	2600	6K	135000
	65.5	100800	94620	94620	80440	49630	40310	150	75	1500	2500	2100	6G	135000
	77.8	100800	94620	94620	88920	55960	45450	150	75	1500	2500	2100	6G	135000
	82.3	91640	84370	77880	74650	58180	47260	150	75	1500	2500	1500	6E	135000
	97.6	91640	84370	77880	74650	65060	52850	150	75	1500	2500	1500	6E	135000
	113	79070	67530	59930	59250	59250	52240	116	75	1500	2500	850	6B	135000
	70.7	100800	94620	94620	77360	47720	38770	150	90	1500	2500	2100	6G	135000
	90.7	100800	94620	94620	88920	56840	46170	150	90	1500	2500	1500	6E	135000
	108	100800	94620	94620	88920	64090	52050	150	90	1500	2500	1500	6E	135000
	114	91630	84370	77880	74650	65060	52850	136	90	1500	2500	1100	6C	135000
	135	91630	84370	77880	74650	65060	52850	116	90	1500	2500	1100	6C	135000
	157	79070	67530	59930	59250	59250	52240	87	90	1500	2500	850	6B	135000
R4	225	100800	94620	91070	73970	45640	37070	90	40	1800	3800	600	5E	135000
	269	100800	94620	94620	83700	51650	41950	80	40	1800	3800	500	5C	135000
	345	100800	94620	94620	88920	61500	49960	62	40	1800	3800	400	5B	135000
	409	100800	94620	94620	88920	64070	52040	52	40	1800	3800	400	5B	135000
	525	100800	94620	94620	88920	67360	54720	41	40	1800	3800	400	5B	135000
	623	100800	94620	94620	88920	67360	54720	34	40	1800	3800	400	5B	135000
	659	91640	84370	77880	74650	65060	52850	30	40	1800	3800	400	5B	135000
	782	91640	84370	77880	74650	65060	52850	25	40	1800	3800	400	5B	135000
	909	79070	67530	59930	59250	59250	52240	18.5	40	1800	3800	400	5B	135000

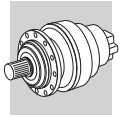

316M R | 400 | 134390 Nm

	i	M_{n2} [Nm]						P_1	Pt	n_1	n_{1max}	M_b		M_{2max}
		$n_2 \cdot h$	$n_2 \cdot h$	$n_2 \cdot h$	$n_2 \cdot h$	$n_2 \cdot h$	$n_2 \cdot h$							
	1:	10000	25000	50000	100000	500000	1000000	[kW]	[kW]	[min-1]	[min-1]	[Nm]		[Nm]
R3	51.1	99520	99520	83160	67540	41680	33850	150	75	1500	2500	2600	6K	192000
	64.1	122190	111300	97490	79180	48860	39690	150	75	1500	2500	2600	6K	192000
	65.5	127370	121920	99020	80430	49630	40310	150	75	1500	2500	2600	6K	192000
	77.8	118110	113650	111640	90670	55950	45450	150	75	1500	2500	2100	6G	192000
	82.3	122180	111300	99530	94300	58180	47260	150	75	1500	2500	2100	6G	192000
	97.6	122180	111300	99530	99530	65600	53280	150	75	1500	2500	2100	6G	192000
	70.7	134400	117260	95220	77340	47720	38770	150	90	1500	2500	2100	6G	192000
	88.7	122190	111300	99530	90690	55950	45450	150	90	1500	2500	2100	6G	192000
	90.7	134400	126160	113420	92100	56830	46170	150	90	1500	2500	2100	6G	192000
	108	118110	113650	113640	103860	64070	52050	150	90	1500	2500	1500	6E	192000
	114	122190	111300	99530	99530	66640	54120	150	90	1500	2500	1500	6E	192000
	135	122190	111300	99530	99530	75130	61020	150	90	1500	2500	1500	6E	192000
R4	225	129890	112120	91060	73970	45640	37070	85	45	1800	3800	800	5G	192000
	269	134400	126160	103050	83700	51650	41950	85	45	1800	3800	630	5E	192000
	289	134400	126160	108440	88080	54350	44150	85	45	1800	3800	630	5E	192000
	337	122180	111300	99530	98120	60540	49180	77	45	1800	3800	500	5C	192000
	363	122190	111300	99530	99530	63710	51750	72	45	1800	3800	400	5B	192000
	430	122190	111300	99530	99530	71830	58340	60	45	1800	3800	400	5B	192000
	443	134400	126160	123700	118580	73240	59490	65	45	1800	3800	400	5B	192000
	525	134400	126160	123700	118580	76300	61980	54	45	1800	3800	400	5B	192000
	623	118110	113650	113640	113640	77820	63210	40	45	1800	3800	400	5B	192000
	659	122180	111300	99530	99530	86750	70460	39	45	1800	3800	400	5B	192000
	782	122190	111300	99530	99530	86750	70460	33	45	1800	3800	400	5B	192000

C

317M R | 410 | 207490 Nm

	i	M_{n2} [Nm]						P_1	Pt	n_1	n_{1max}	M_b		M_{2max}
		$n_2 \cdot h$	$n_2 \cdot h$	$n_2 \cdot h$	$n_2 \cdot h$	$n_2 \cdot h$	$n_2 \cdot h$							
	1:	10000	25000	50000	100000	500000	1000000	[kW]	[kW]	[min-1]	[min-1]	[Nm]		[Nm]
R3	49.8	97030	97030	81690	66340	40940	33250	150	90	1500	2500	2600	6K	393000
	64.9	126120	121070	98330	79870	49280	40030	150	90	1500	2500	2600	6K	393000
	78.1	125800	121300	111970	90940	56110	45580	150	90	1500	2500	2600	6K	393000
	83.3	161300	144170	117090	95110	58690	47670	150	90	1500	2500	2600	6K	393000
	100	155950	155950	133340	108290	66820	54280	150	90	1500	2500	2100	6G	393000
	119	150260	128480	114130	112960	75340	61190	150	90	1500	2500	1500	6E	393000
	68.9	151620	115150	93530	75970	46880	38080	150	100	1500	2500	2600	6K	393000
	89.8	179830	138660	112600	91460	56440	45850	150	100	1500	2500	2600	6K	393000
	108	125790	121300	121300	104160	64260	52200	150	100	1500	2500	2100	6G	393000
	115	195640	165120	134080	108910	67200	54600	150	100	1500	2500	2100	6G	393000
	139	155940	155950	148950	124040	76520	62160	150	100	1500	2500	1500	6E	393000
	165	150260	128480	114130	112960	86290	70080	150	100	1500	2500	1100	6C	393000
R4	220	138860	110130	89450	72660	44830	36420	90	50	1800	3800	800	5G	393000
	262	164050	124620	101220	82220	50730	41210	90	50	1800	3800	800	5G	393000
	336	195360	148400	120540	97910	60410	49070	90	50	1800	3800	800	5G	393000
	399	193680	167310	135890	110380	68110	55320	90	50	1800	3800	600	5E	393000
	438	179830	166930	145110	117860	72730	59070	87	50	1800	3800	500	5C	393000
	520	179830	166930	163600	132870	81990	66600	74	50	1800	3800	400	5B	393000
	626	125790	121300	121300	121300	93360	75830	43	50	1800	3800	400	5B	393000
	677	155950	155950	148950	142350	98610	80090	49	50	1800	3800	400	5B	393000
	803	155940	155950	148950	142350	111170	90300	41	50	1800	3800	400	5B	393000
	953	150260	128480	114130	112960	112960	95190	34	50	1800	3800	400	5B	393000

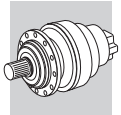

318M R — 420 — 297550 Nm

	i	M_{n2} [Nm]						P_1	Pt	n_1	n_{1max}	M_b		M_{2max}
		$n_2 \cdot h$	$n_2 \cdot h$	$n_2 \cdot h$	$n_2 \cdot h$	$n_2 \cdot h$	$n_2 \cdot h$							
	1:	10000	25000	50000	100000	500000	1000000	[kW]	[kW]	[min-1]	[min-1]	[Nm]		[Nm]
R4	225	297550	260540	227590	184830	114050	92650	150	90	1500	2500	1500	6E	500000
	288	297550	260540	231740	220140	135810	110320	150	90	1500	2500	1500	6E	500000
	342	297540	260540	231740	223920	153140	124380	150	90	1500	2500	1100	6C	500000
	362	297550	260540	231740	223920	159240	129330	146	90	1500	2500	1100	6C	500000
	430	297550	260540	231740	223920	160590	130440	123	90	1500	2500	850	6B	500000
	499	264710	256160	231740	223920	160590	130440	94	90	1500	2500	850	6B	500000
	311	297550	260540	231740	211740	130610	106110	150	110	1500	2500	1100	6C	500000
	399	297530	260540	231740	223920	155590	126360	132	110	1500	2500	850	6B	500000
	474	297550	260540	231740	223920	160590	130440	111	110	1500	2500	850	6B	500000
	501	297550	260540	231740	223920	160590	130440	105	110	1500	2500	850	6B	500000
	595	297550	260540	231740	223920	160590	130440	89	110	1500	2500	850	6B	500000
	691	264710	256160	231740	223920	160590	130440	68	110	1500	2500	850	6B	500000

319 R — 430 — 471190 Nm

	i	M_{n2} [Nm]						P_1	Pt	n_1	n_{1max}	M_b		M_{2max}
		$n_2 \cdot h$	$n_2 \cdot h$	$n_2 \cdot h$	$n_2 \cdot h$	$n_2 \cdot h$	$n_2 \cdot h$							
	1:	10000	25000	50000	100000	500000	1000000	[kW]	[kW]	[min-1]	[min-1]	[Nm]		[Nm]
R4	249	396290	300980	244480	198580	122540	99540	150	95	1500	2500	2100	6G	680000
	320	471190	358410	291120	236470	145920	118530	150	95	1500	2500	2100	6G	680000
	379	443030	383900	311830	253280	156280	126940	150	95	1500	2500	1500	6E	680000
	401	471180	383900	311830	253280	156280	126940	150	95	1500	2500	1500	6E	680000
	475	356250	305810	272430	249240	153790	124910	133	95	1500	2500	1100	6C	680000
	563	356280	305810	272430	249240	153790	124910	112	95	1500	2500	850	6B	680000
	655	336410	305810	272430	249240	153790	124910	91	95	1500	2500	850	6B	680000
	345	453930	344660	279970	227410	140330	114010	150	115	1500	2500	1500	6E	680000
	442	471160	383900	311830	253280	156280	126940	150	115	1500	2500	1500	6E	680000
	525	443030	383900	311830	253280	156280	126940	150	115	1500	2500	1100	6C	680000
	555	471190	383900	311830	253280	156280	126940	150	115	1500	2500	850	6B	680000
	657	356250	305810	272430	249240	153790	124910	96	115	1500	2500	850	6B	680000
	780	356280	305810	272430	249240	153790	124910	81	115	1500	2500	850	6B	680000
	906	336410	305810	272430	249240	153790	124910	66	115	1500	2500	850	6B	680000

321 R — 440 — 655200 Nm

	i	M_{n2} [Nm]						P_1	Pt	n_1	n_{1max}	M_b		M_{2max}
		$n_2 \cdot h$	$n_2 \cdot h$	$n_2 \cdot h$	$n_2 \cdot h$	$n_2 \cdot h$	$n_2 \cdot h$							
	1:	10000	25000	50000	100000	500000	1000000	[kW]	[kW]	[min-1]	[min-1]	[Nm]		[Nm]
R4	221	374000	281300	226400	181800	111130	90320	150	105	1500	2500	2600	6K	934000
	288	447500	340100	268500	216800	133790	108740	150	105	1500	2500	2100	6G	934000
	347	506300	377100	307000	247800	152340	123900	150	105	1500	2500	2100	6G	934000
	370	528500	402100	317800	264200	159330	129500	150	105	1500	2500	2100	6G	934000
	446	587310	445420	366500	293970	181430	147460	150	105	1500	2500	2100	6G	934000
	529	536350	503040	410200	331430	204550	166260	150	105	1500	2500	1500	6E	934000
	306	401340	304660	247480	201030	124050	100790	150	125	1500	2500	2100	6G	934000
	399	483180	366770	297930	242020	149350	121350	150	125	1500	2500	2100	6G	934000
	481	550170	417600	339230	275560	170050	138170	132	125	1500	2500	1100	6C	934000
	512	575410	436760	354790	288200	177850	144510	125	125	1500	2500	1100	6C	934000
	617	655200	497290	403960	328150	202500	164540	120	125	1500	2500	1100	6C	934000
	732	536360	517290	420170	341290	210580	171050	113	125	1500	2500	850	6B	934000

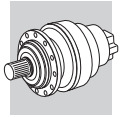

26 DIMENSIONI

300 L

	Hydraulic motor										
	MG							471			Kg
cm3	050	080	100	125	160	200	250				
	M1							M2	M3	M4	
300 L1	162	167	171	175	181	–	–	113	60	1/4G	14
300 L2	162	167	171	–	–	–	–	113	60	1/4G	14

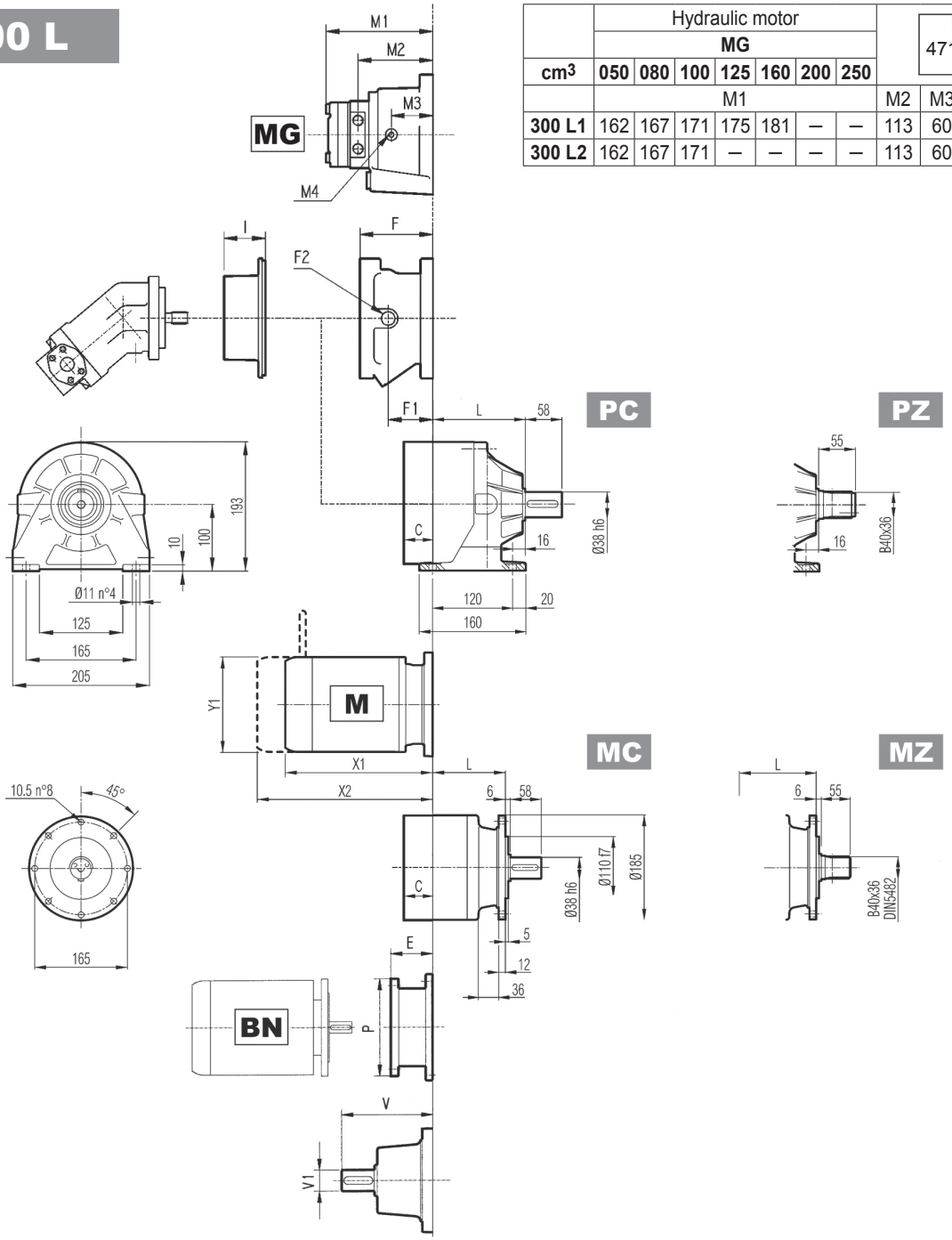

	L				Kg			
	MC - MZ	PC - PZ	HC - HZ	FP - FZ - FDK	MC - MZ	PC - PZ	HC - HZ	FP - FZ - FDK
300 L1	80	86	115	80	18	23	20	16
300 L2	133	139	168	133	22	27	24	20
300 L3	186	192	221	186	26	31	28	24
300 L4	239	245	274	239	30	35	32	28

	V	V1	Kg	V	V1	Kg	C	Input	I	F	F1	F2	Type	Input	Kg
300 L1	137.5	24	6	158	38	7	37	A		105	65	1/4 G	4	A	10
300 L2	137.5	24	6	158	38	7	37	A		105	65	1/4 G	4	A	10
300 L3	137.5	24	6	158	38	7	37	A		105	65	1/4 G	4	A	10
300 L4	137.5	24	6	158	38	7	37	A	461	105	65	1/4 G	4	A	10

300 L

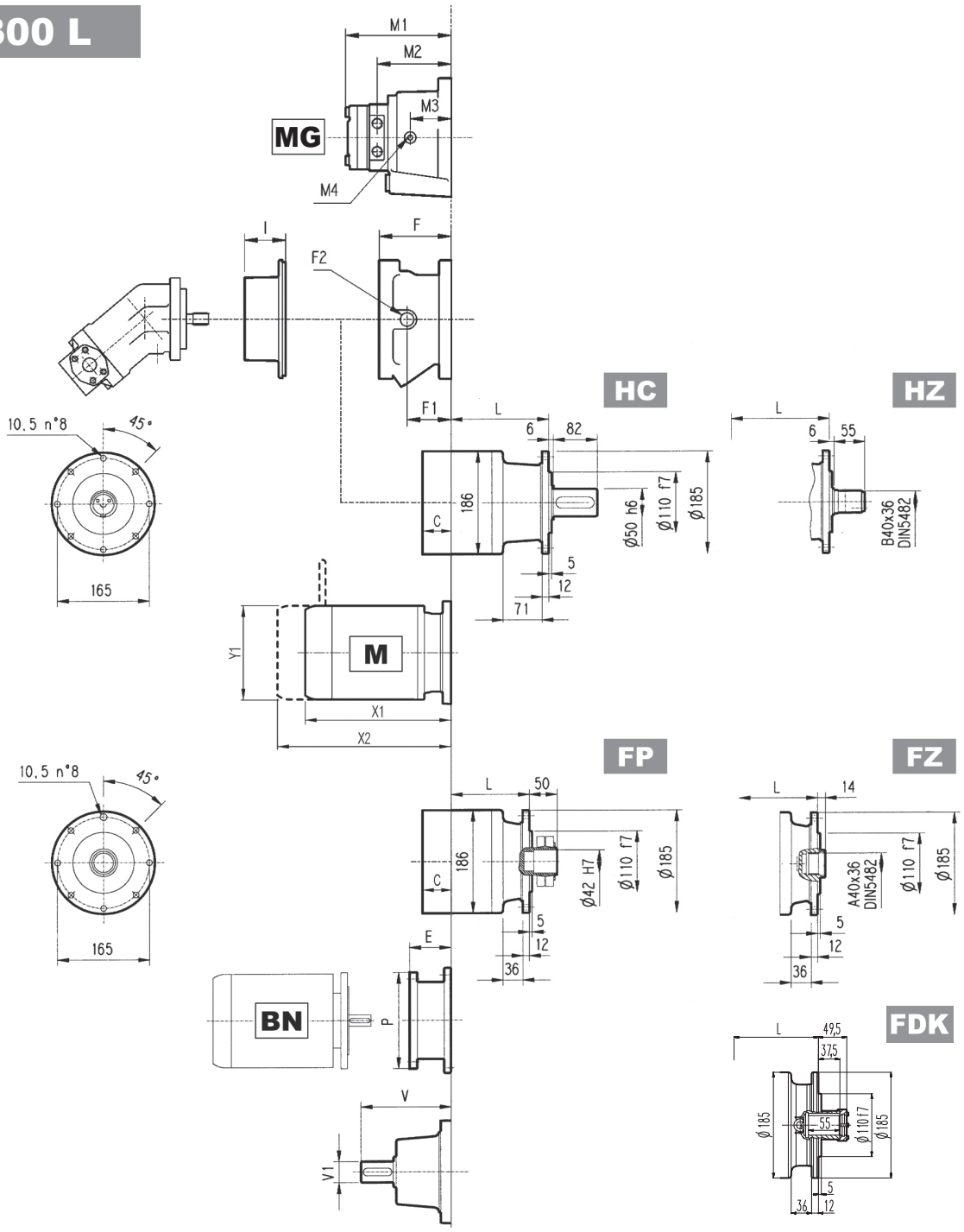

FP — M_{2max} = 1300 Nm

	P71		P80		P90		P100		P112		P132	
	E	P	E	P	E	P	E	P	E	P	E	P
300 L1	65	160	84	200	84	200	94	250	94	250	114	300
300 L2	65	160	84	200	84	200	94	250	94	250	114	300
300 L3	65	160	84	200	84	200	94	250	94	250	114	300
300 L4	65	160	84	200	84	200	94	250	94	250	114	300

	S1 + M1			S2 + M2S			S3 + M3S			S3 + M3L			S4 + M4		
	X1	X2	Y1	X1	X2	Y1	X1	X2	Y1	X1	X2	Y1	X1	X2	Y1
300 L1	253	314	138	280	352	156	325	421	195	357	449	195	460	571	258
300 L2	253	314	138	280	352	156	325	421	195	357	449	195	460	571	258
300 L3	253	314	138	280	352	156	325	421	195	357	449	195	460	571	258
300 L4	253	314	138	280	352	156	325	421	195	357	449	195	460	571	258

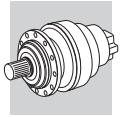

300 R

	Hydraulic motor							471			Kg
	MG										
cm³	050	080	100	125	160	200	250				
	M1							M2	M3	M4	
300 R2	162	167	171	–	–	–	–	113	60	1/4G	14

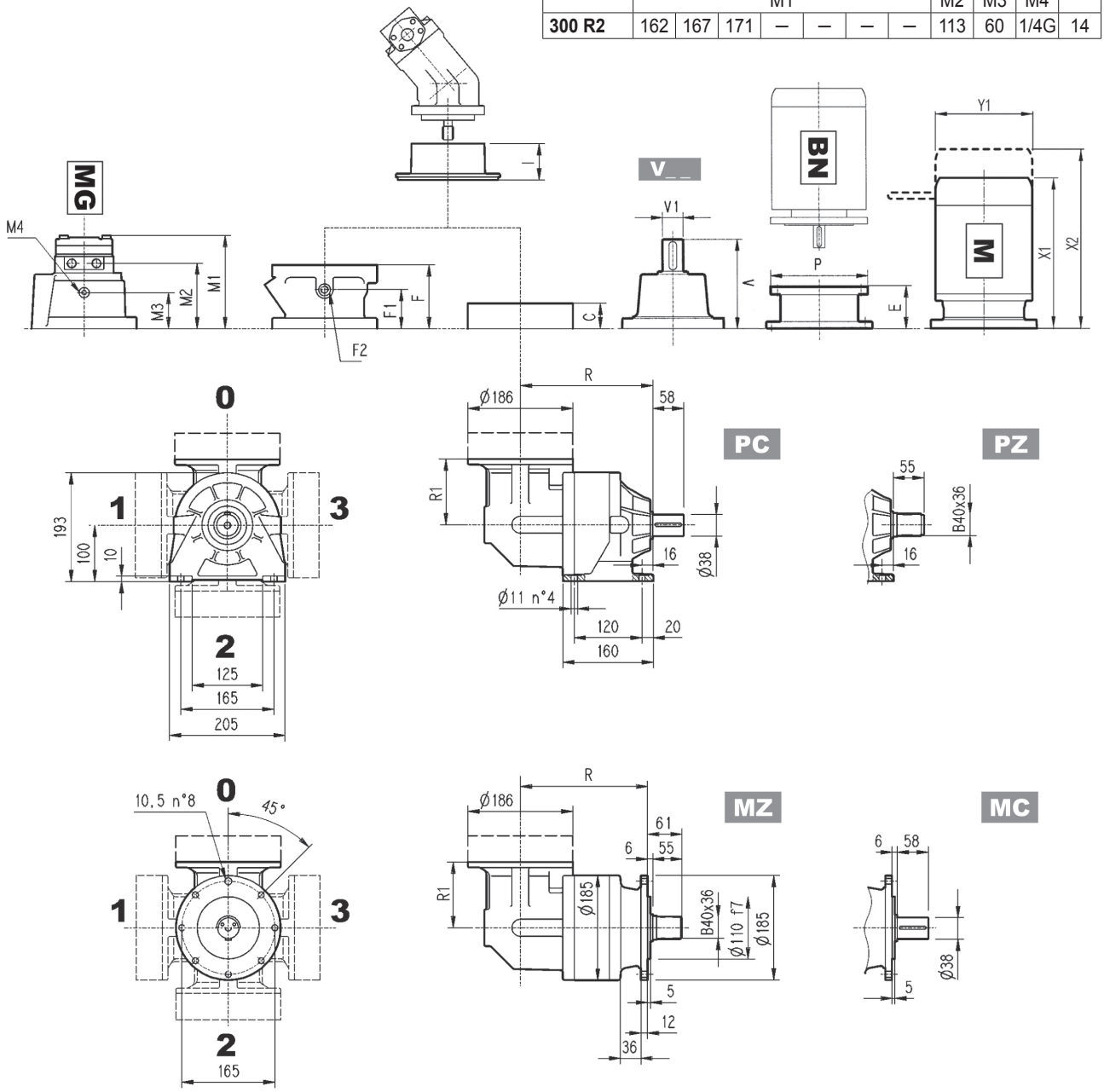

	R				R1	Kg			
	MC - MZ	PC - PZ	HC - HZ	FP - FZ - FDK		MC - MZ	PC - PZ	HC - HZ	FP - FZ - FDK
300 R2	172	178	207	172	122	32	37	34	30
300 R3	225	231	260	225	122	36	41	38	34
300 R4	278	284	313	278	122	40	45	42	38

	V	V1	Kg	V	V1	Kg	C	Input	I	F	F1	F2	Type	Input	Kg
300 R2	137.5	24	6	158	38	7	37	A		105	65	1/4 G	4	A	10
300 R3	137.5	24	6	158	38	7	37	A		105	65	1/4 G	4	A	10
300 R4	137.5	24	6	158	38	7	37	A	461	105	65	1/4 G	4	A	10

300 R

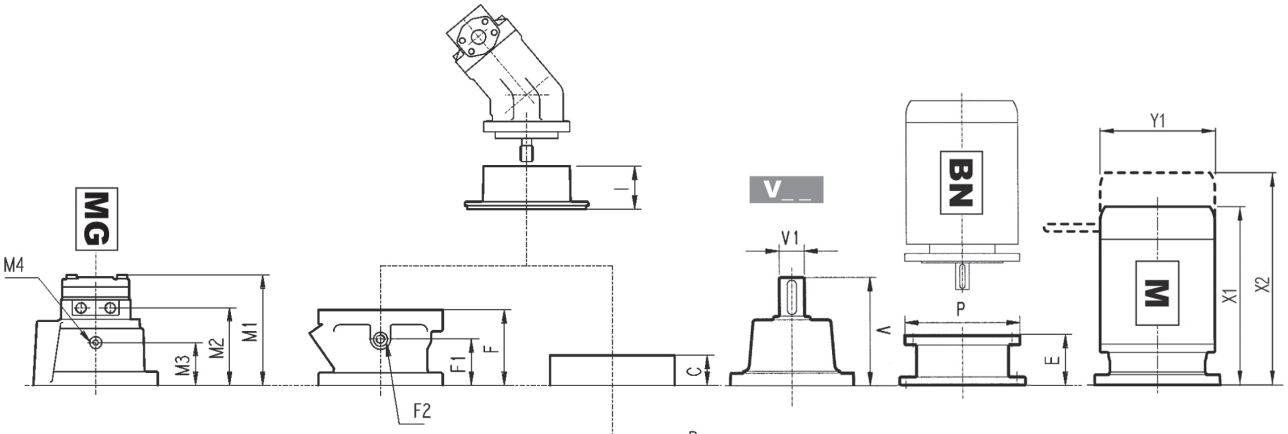

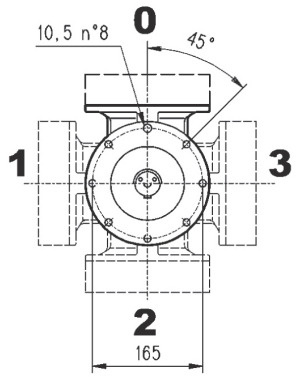

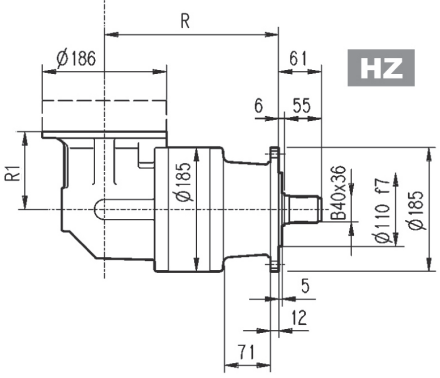

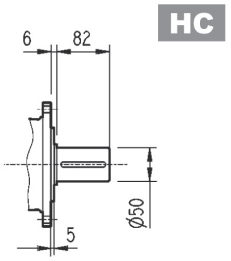

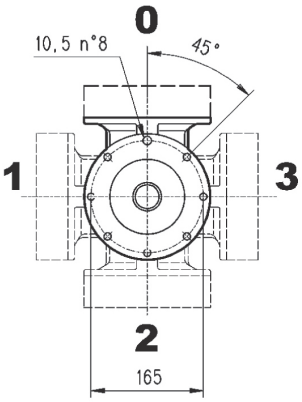

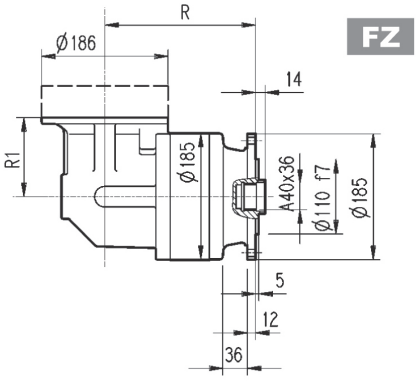

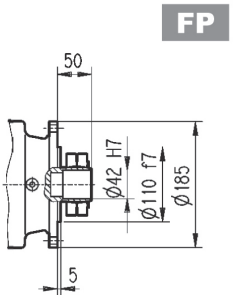

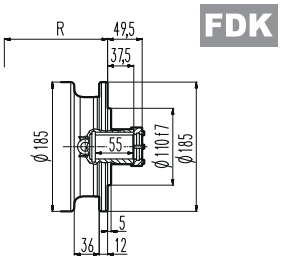

FP	M_{2max} = 1300 Nm

	P71		P80		P90		P100		P112		P132	
	E	P	E	P	E	P	E	P	E	P	E	P
300 R2	65	160	84	200	84	200	94	250	94	250	114	300
300 R3	65	160	84	200	84	200	94	250	94	250	114	300
300 R4	65	160	84	200	84	200	94	250	94	250	114	300

	S1 + M1			S2 + M2S			S3 + M3S			S3 + M3L			S4 + M4		
	X1	X2	Y1	X1	X2	Y1	X1	X2	Y1	X1	X2	Y1	X1	X2	Y1
300 R2	253	314	138	328	400	156	373	469	195	405	497	195	508	619	258
300 R3	253	314	138	328	400	156	373	469	195	405	497	195	–	–	–
300 R4	253	314	138	328	400	156	373	469	195	–	–	–	–	–	–

3/V 00 L3

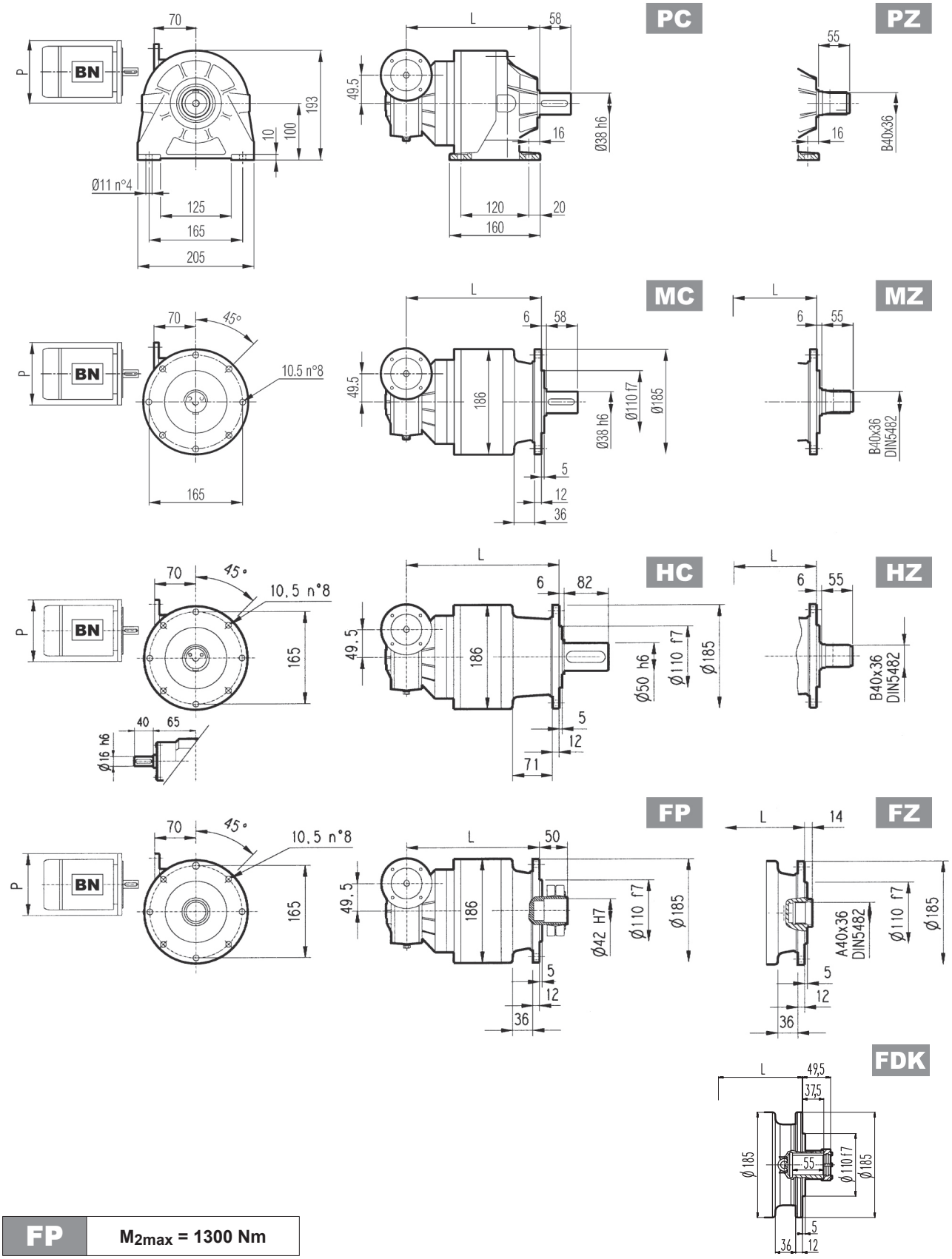

FP	M_{2max} = 1300 Nm

	L				Kg				P63	P71	P80
	MC - MZ	PC - PZ	HC - HZ	FP - FZ - FDK	MC - MZ	PC - PZ	HC - HZ	FP - FZ - FDK	P	P	P
3/V 00 L3	255	261	290	255	25	30	27	23	140	160	200

3/A 00 L2

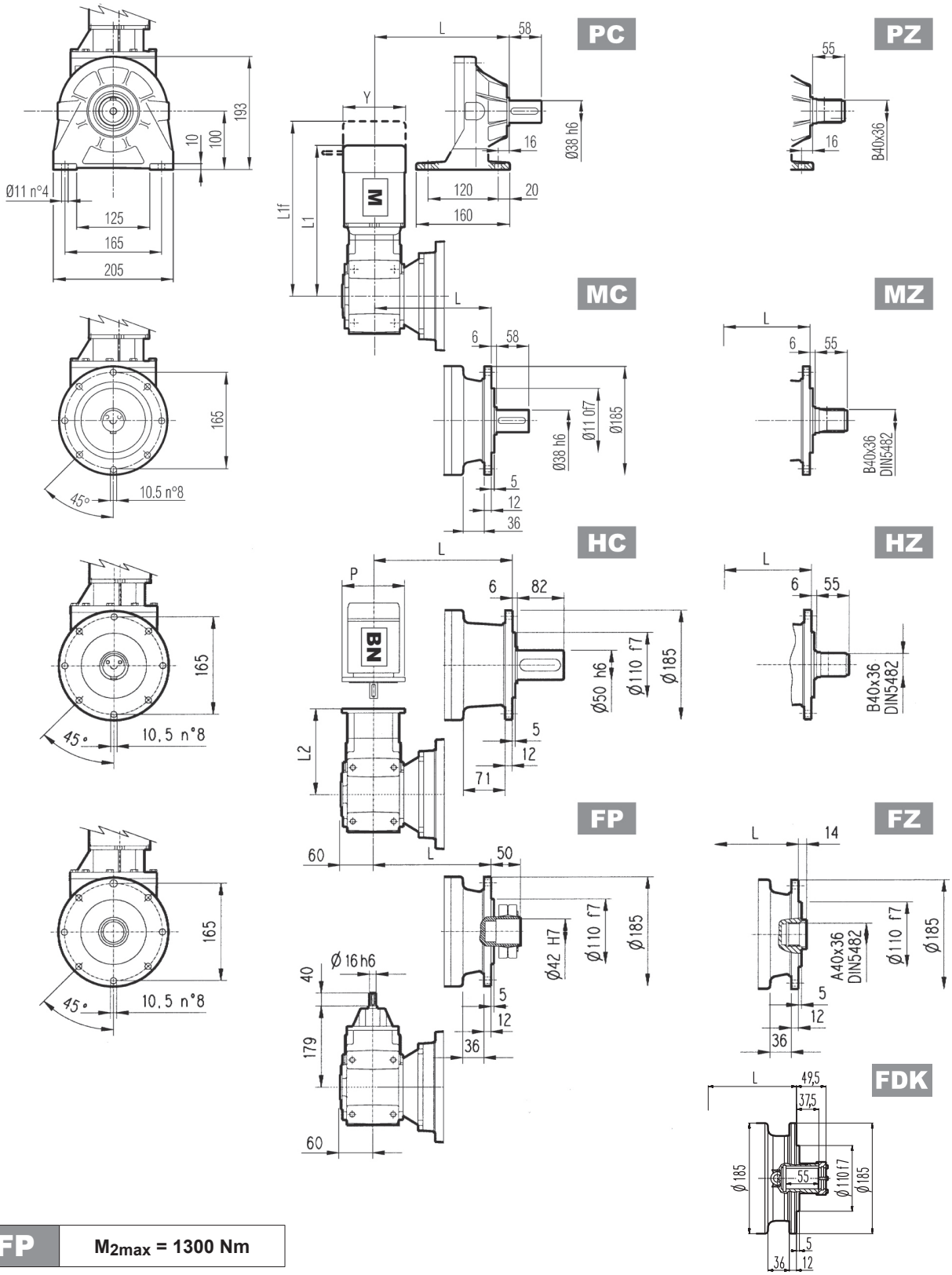

FP	M_{2max} = 1300 Nm

	L				Kg			
	MC - MZ	PC - PZ	HC - HZ	FP - FZ - FDK	MC - MZ	PC - PZ	HC - HZ	FP - FZ - FDK
3/A 00 L2	193	199	228	193	38	43	40	36

	P63		P71		P80		P90		P100		S1 + M1			S2 + M2S			S3 + M3SA			S3 + M3LA		
	L2	P	L2	P	L2	P	L2	P	L2	P	L1	L1f	Y	L1	L1f	Y	L1	L1f	Y	L1	L1f	Y
3/A 00 L2	212.5	140	212.5	160	232	200	232	200	242	250	368	428	138	394	466	156	439	535	195	470	563	195

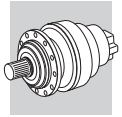

300 L | **300 R** | **3/V 00 L3** | **3/A 00 L2**

MC

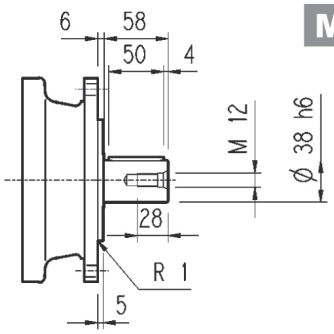

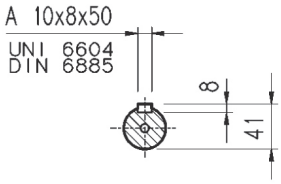

PC

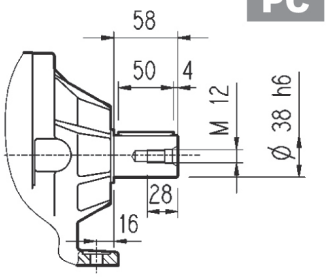

HC

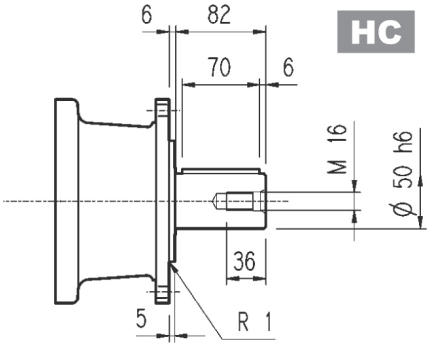

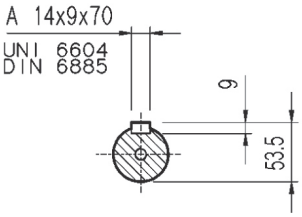

MZ **HZ**

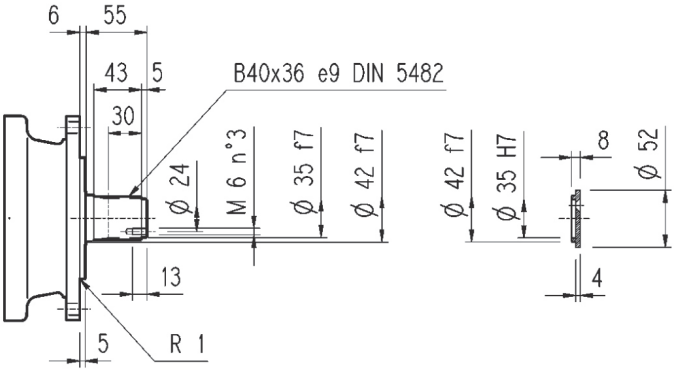

FZ

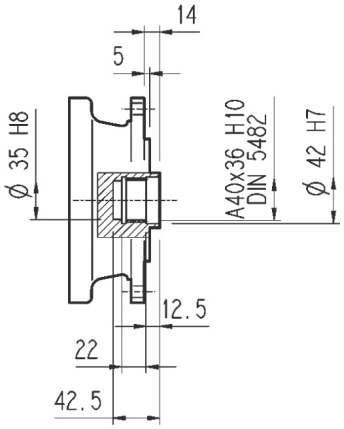

FP

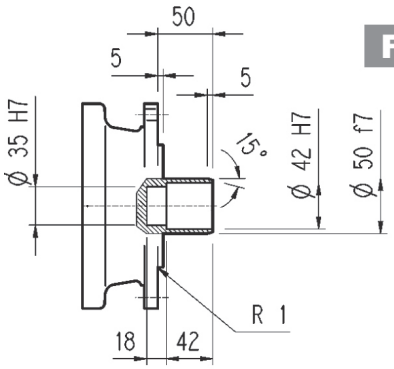

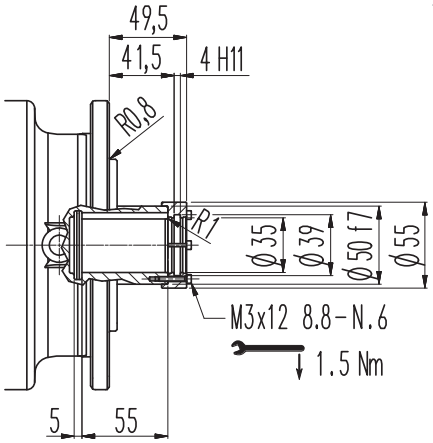

FDK

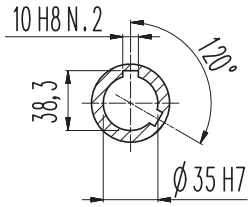

FP	**M_{2max} = 1300 Nm**

Flangia

W0A

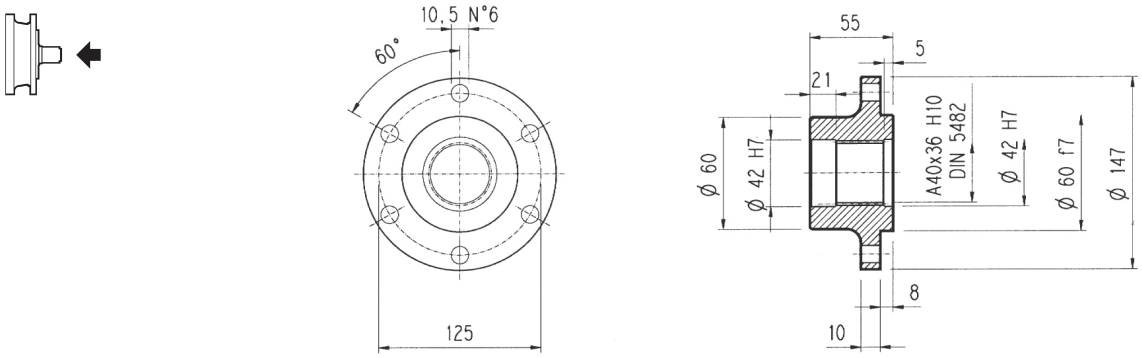

Materiale: Acciaio C40

Pignoni

P...

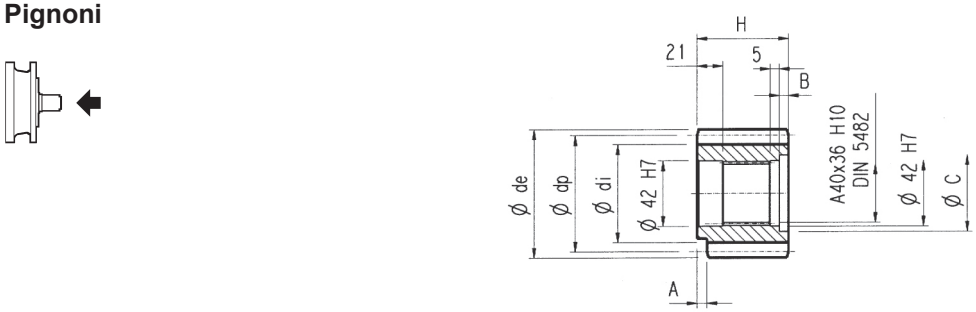

α = 20°

	m	z	x	dp	di	de	H	A	B	C	Materiale
PBE	4.5	14	0.507	63	56	75.5	55	—	—	—	Acciaio 39NiCrMo3 Bonificato
PCE	5	14	0.500	70	62.5	84.8	65	—	10	53	
PDC	6	12	0.250	72	61	84.8	59	14	4	54	
PDE	6	14	0.500	84	73	99.6	65	—	10	54	

Manicotti lisci

M0A

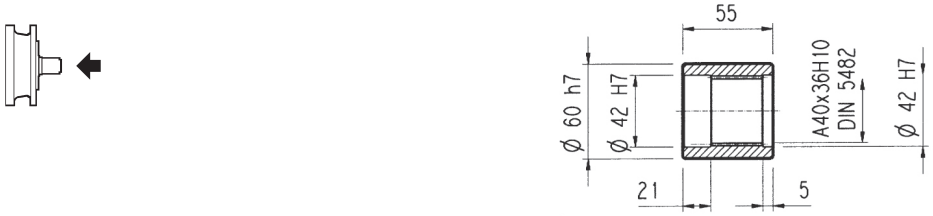

Materiale: Acciaio 16CrNi4

Barre scanalate

B0A

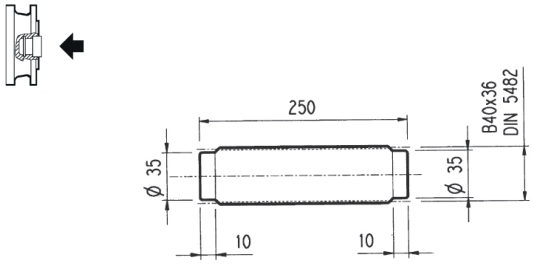

Materiale: Acciaio 18NiCrMo5 UNI 5331
da cementare e temprare 50-55 HRC

Giunto ad attrito

G0A

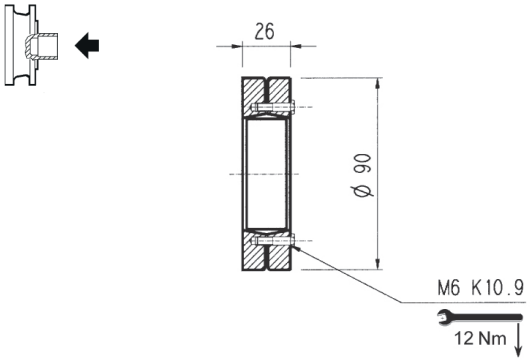

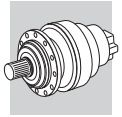

300 L 300 R

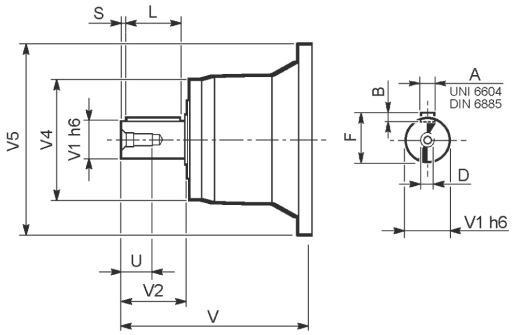

		V	V1	V2	V4	V5	A	B	F	L	S	D	U
300 L1	**V01A**	137.5	24	36	120	186	8	7	27	30	3	M8	19
	V01B	158	38	58	120	186	10	8	41	50	4	M12	28
300 L2	**V01A**	137.5	24	36	120	186	8	7	27	30	3	M8	19
	V01B	158	38	58	120	186	10	8	41	50	4	M12	28
300 L3	**V01A**	137.5	24	36	120	186	8	7	27	30	3	M8	19
	V01B	158	38	58	120	186	10	8	41	50	4	M12	28
300 L4	**V01A**	137.5	24	36	120	186	8	7	27	30	3	M8	19
	V01B	158	38	58	120	186	10	8	41	50	4	M12	28
300 R2-R3-R4	**V01A**	137.5	24	36	120	186	8	7	27	30	3	M8	19
	V01B	158	38	58	120	186	10	8	41	50	4	M12	28

300 L 300 R

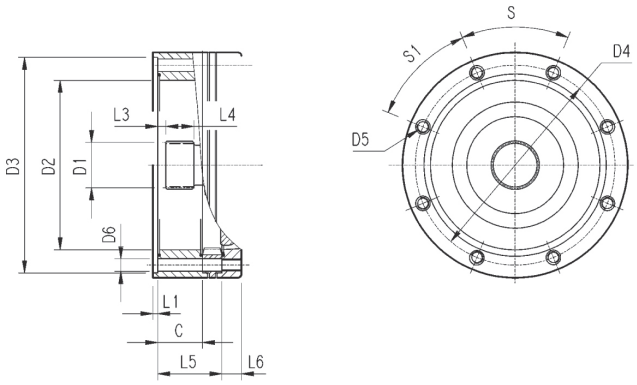

		C	D1	D2	D3	D4	D5	D6	L1	L2	L3	L4	L5	L6	S	S1	Input
300 L1	**V9AA**	37	40x36 DIN5482	140	178 H7	165	M10 n°8	11	4	—	9	18	53	18	45°	45°	A
300 L2	**V9AA**	37	40x36 DIN5482	140	178 H7	165	M10 n°8	11	4	—	9	18	106	18	45°	45°	A
300 L3	**V9AA**	37	40x36 DIN5482	140	178 H7	165	M10 n°8	11	4	—	9	18	159	18	45°	45°	A
300 L4	**V9AA**	37	40x36 DIN5482	140	178 H7	165	M10 n°8	11	4	—	9	18	212	18	45°	45°	A
300 R2-R3-R4	**V9AA**	37	40x36 DIN5482	140	178 H7	165	M10 n°8	11	4	—	9	18	37	18	45°	45°	A

3/V 00 L3

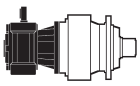

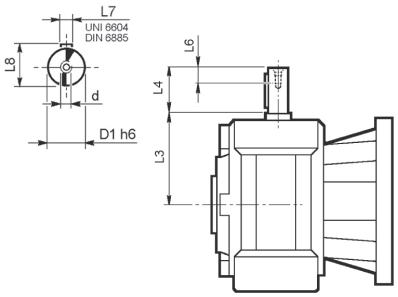

	D1 h6	L3	L4	L6	L7	L8	d
3/V 00 L3_HS	16	65	40	16	5	18	M6

3/A 00 L2

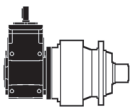

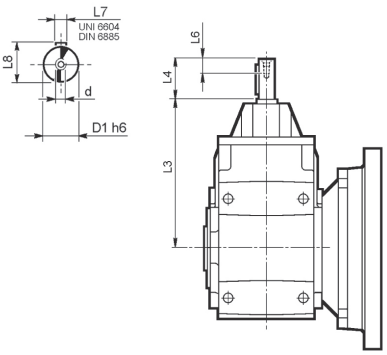

	D1 h6	L3	L4	L6	L7	L8	d
3/A 00 L2_HS	16	179	40	16	5	18	M6

Carichi radiali ed assiali ammissibili sull'albero lento per un valore di $Fh_2 : n_2 \cdot h = 100000$

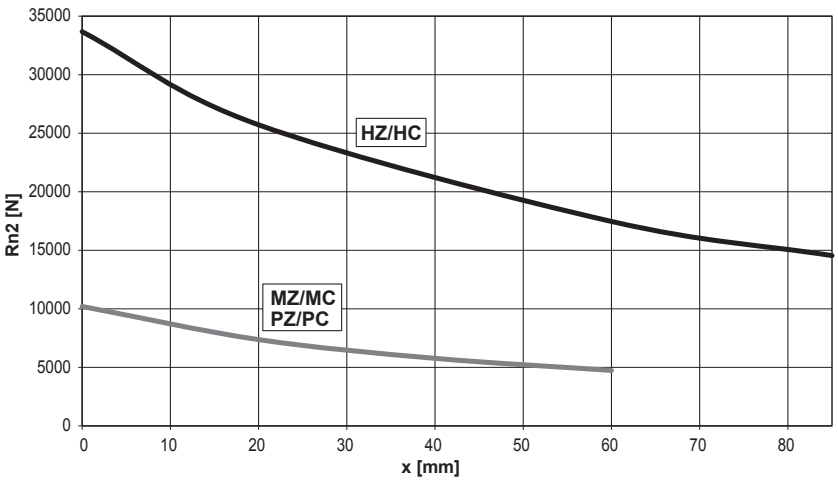

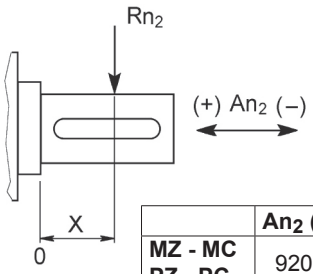

	An_2 (+)	An_2 (-)
MZ - MC PZ - PC	9200	6900
HZ - HC	20000	20000

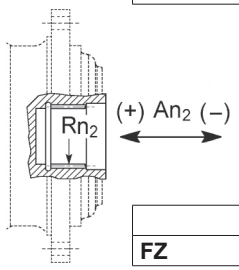

	Rn_2	An_2 (+/-)
FZ	3713	3713

Fattore fh_2 correttivo per carichi sugli alberi	$Fh_2 = n_2 \cdot h$		10000	25000	50000	100000	500000	1000000
	fh_2	FZ	**2.15**	**1.59**	**1.26**	**1.00**	**0.58**	**0.46**
		MZ - MC - PZ - PC	**2.15**	**1.59**	**1.26**	**1.00**	**0.58**	**0.46**
		HZ - HC	**1.27**	**1.27**	**1.26**	**1.00**	**0.62**	**0.50**

Carichi radiali ammissibili sull'albero veloce per un valore di $Fh_1 : n_1 \cdot h = 250000$

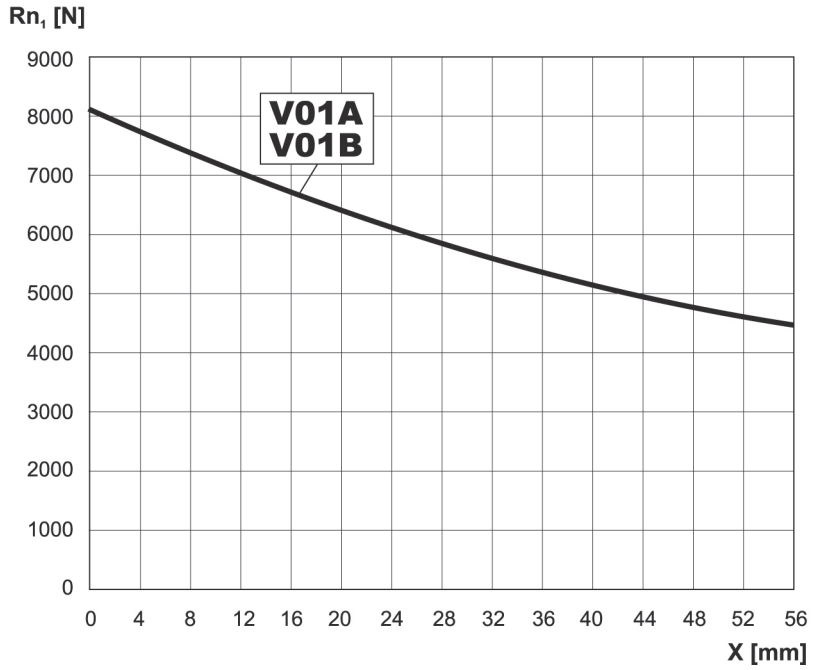

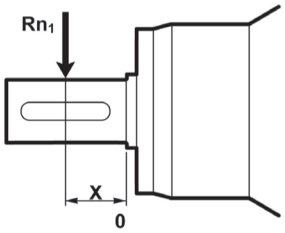

Fattore fh_1 correttivo per carichi sugli alberi	$Fh_1 = n_1 \cdot h$	250000	500000	1000000	2000000	5000000	10000000
	fh_1	**1**	**0.79**	**0.63**	**0.50**	**0.37**	**0.29**

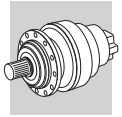

301 L

	Hydraulic motor										
	MG							471			Kg
cm³	050	080	100	125	160	200	250				
	M1							M2	M3	M4	
301 L1	–	167	171	175	181	188	197	113	60	1/4G	14
301 L2	162	167	171	175	181	–	–	113	60	1/4G	14

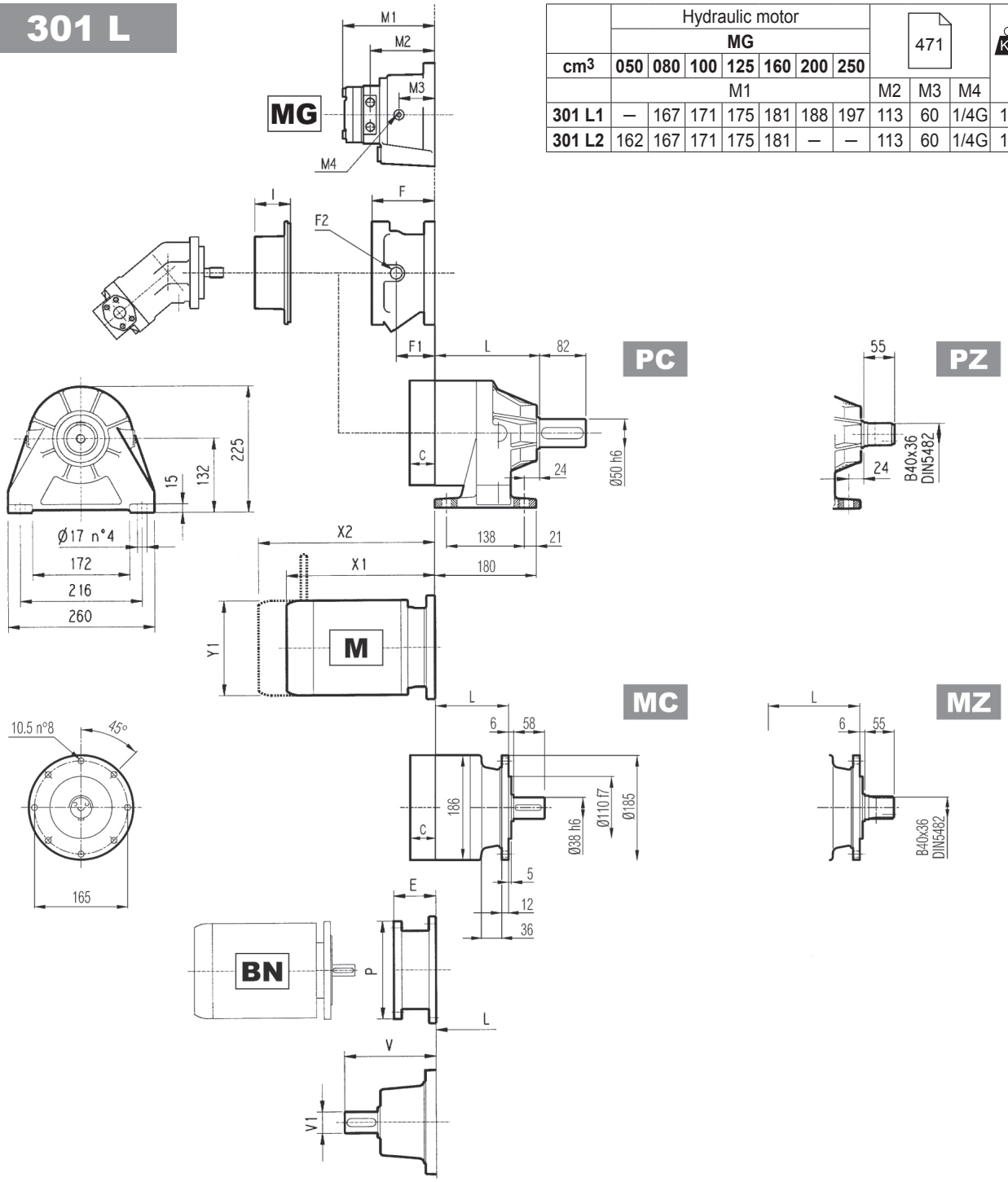

	L				Kg			
	MC - MZ	PC - PZ	HC - HZ	FP - FZ - FDK	MC - MZ	PC - PZ	HC - HZ	FP - FZ - FDK
301 L1	92	132	126	92	21	26	23	19
301 L2	145	185	176	145	25	30	27	23
301 L3	198	238	232	198	29	34	31	27
301 L4	251	291	285	251	33	38	35	31

	V	V1	Kg	V	V1	Kg	C	Input	I	F	F1	F2	Type	Input	Kg
301 L1	137.5	24	6	158	38	7	37	A	461	105	65	1/4 G	4	A	10
301 L2	137.5	24	6	158	38	7	37	A		105	65	1/4 G	4	A	10
301 L3	137.5	24	6	158	38	7	37	A		105	65	1/4 G	4	A	10
301 L4	137.5	24	6	158	38	7	37	A		105	65	1/4 G	4	A	10

301 L

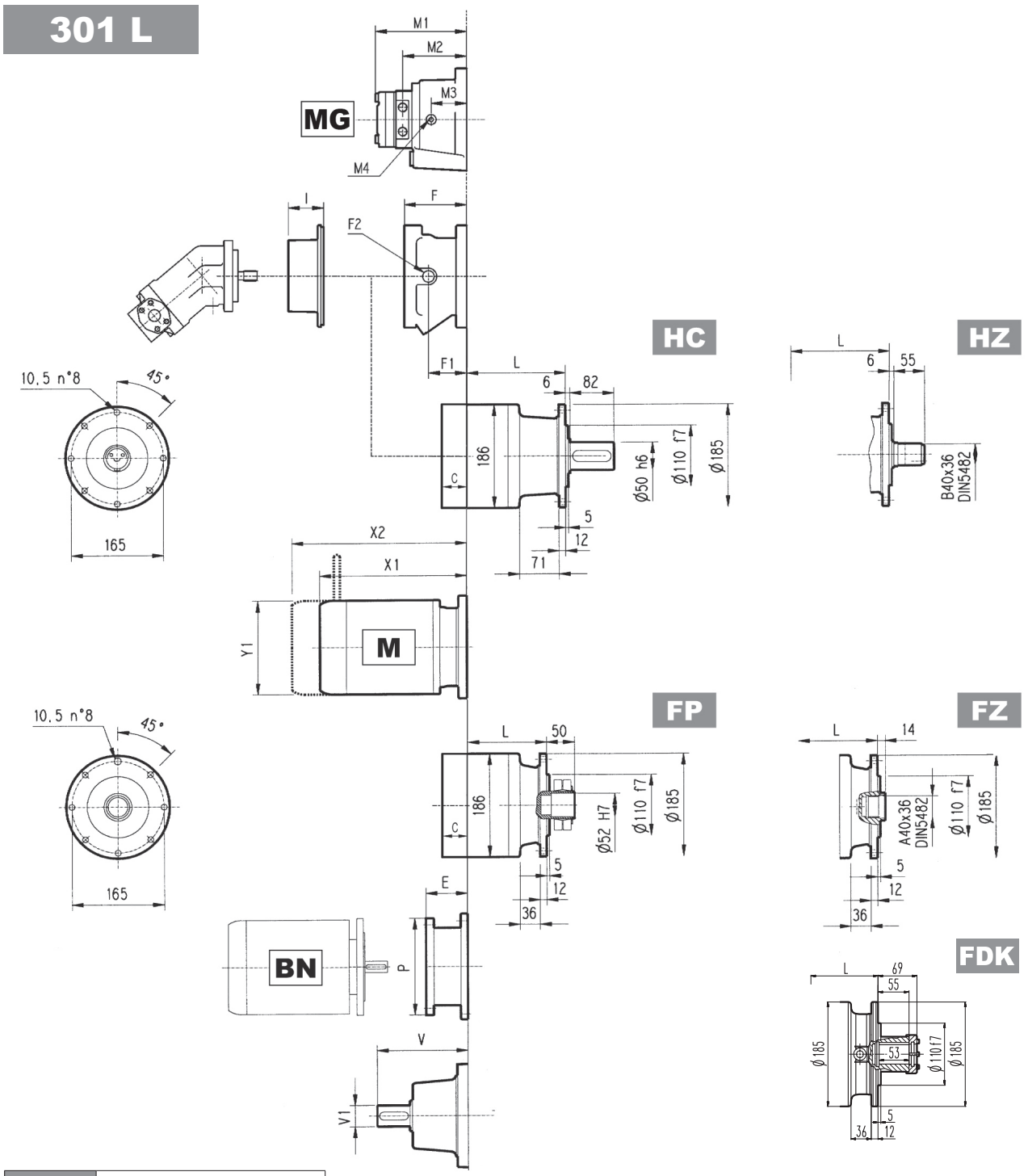

FP	M_{2max} = 2400 Nm

	P71		P80		P90		P100		P112		P132	
	E	P	E	P	E	P	E	P	E	P	E	P
301 L1	65	160	84	200	84	200	94	250	94	250	114	300
301 L2	65	160	84	200	84	200	94	250	94	250	114	300
301 L3	65	160	84	200	84	200	94	250	94	250	114	300
301 L4	65	160	84	200	84	200	94	250	94	250	114	300

	S1 + M1			S2 + M2S			S3 + M3S			S3 + M3L			S4 + M4		
	X1	X2	Y1	X1	X2	Y1	X1	X2	Y1	X1	X2	Y1	X1	X2	Y1
301 L1	253	314	138	280	352	156	325	421	195	357	449	195	460	571	258
301 L2	253	314	138	280	352	156	325	421	195	357	449	195	460	571	258
301 L3	253	314	138	280	352	156	325	421	195	357	449	195	460	571	258
301 L4	253	314	138	280	352	156	325	421	195	357	449	195	460	571	258

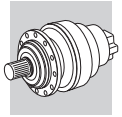

301 R

	Hydraulic motor										
	MG							471			Kg
cm³	050	080	100	125	160	200	250				
	M1							M2	M3	M4	
301 R2	162	167	171	175	181	–	–	113	60	1/4G	14

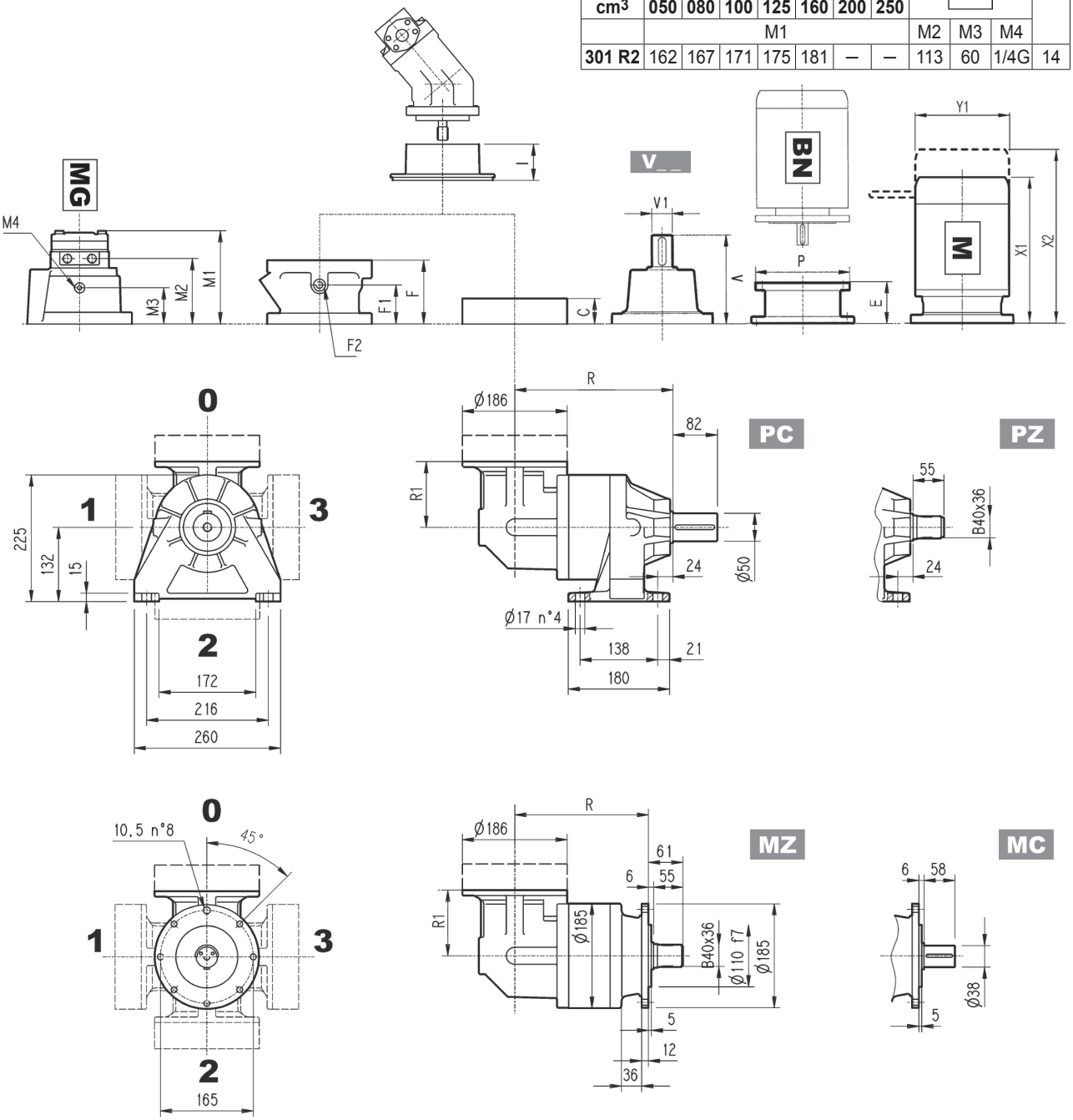

	R				R1	Kg			
	MC - MZ	PC - PZ	HC - HZ	FP - FZ - FDK		MC - MZ	PC - PZ	HC - HZ	FP - FZ - FDK
301 R2	184	225	219	184	122	35	42	37	33
301 R3	237	278	272	237	122	39	46	41	37
301 R4	290	331	325	290	122	43	50	45	41

	V	V1	Kg	V	V1	Kg	C	Input	I	F	F1	F2	Type	Input	Kg
301 R2	137.5	24	6	158	38	7	37	A		105	65	1/4 G	4	A	10
301 R3	137.5	24	6	158	38	7	37	A		105	65	1/4 G	4	A	10
301 R4	137.5	24	6	158	38	7	37	A	461	105	65	1/4 G	4	A	10

301 R

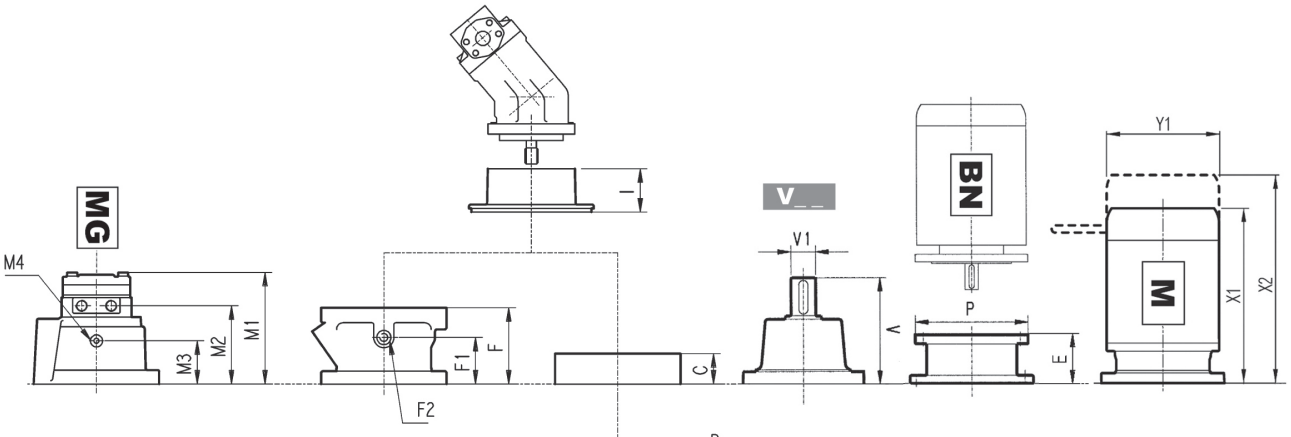

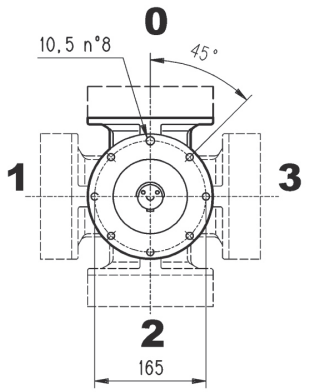

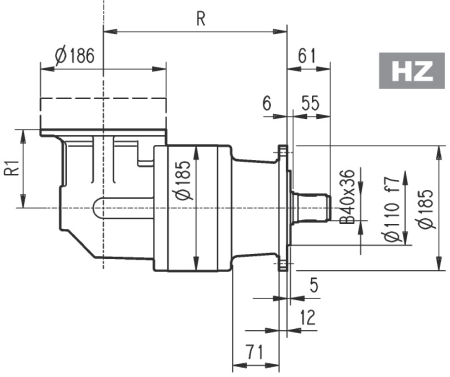

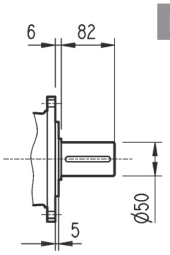

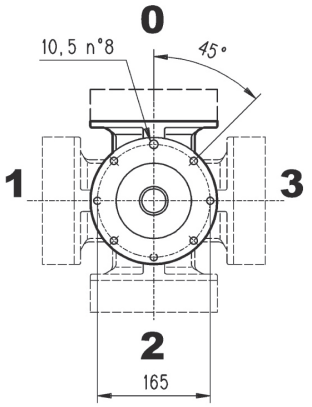

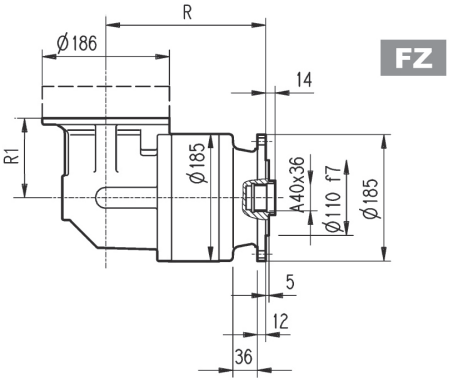

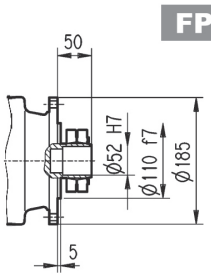

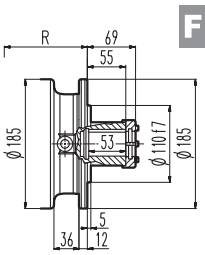

FP	M_{2max} = 2400 Nm

	P71		P80		P90		P100		P112		P132	
	E	P	E	P	E	P	E	P	E	P	E	P
301 R2	65	160	84	200	84	200	94	250	94	250	114	300
301 R3	65	160	84	200	84	200	94	250	94	250	114	300
301 R4	65	160	84	200	84	200	94	250	94	250	114	300

	S1 + M1			S2 + M2S			S3 + M3S			S3 + M3L			S4 + M4		
	X1	X2	Y1	X1	X2	Y1	X1	X2	Y1	X1	X2	Y1	X1	X2	Y1
301 R2	253	314	138	328	400	156	373	469	195	405	497	195	508	619	258
301 R3	253	314	138	328	400	156	373	469	195	405	497	195	—	—	—
301 R4	253	314	138	328	400	156	373	469	195	—	—	—	—	—	—

3/V 01 L3

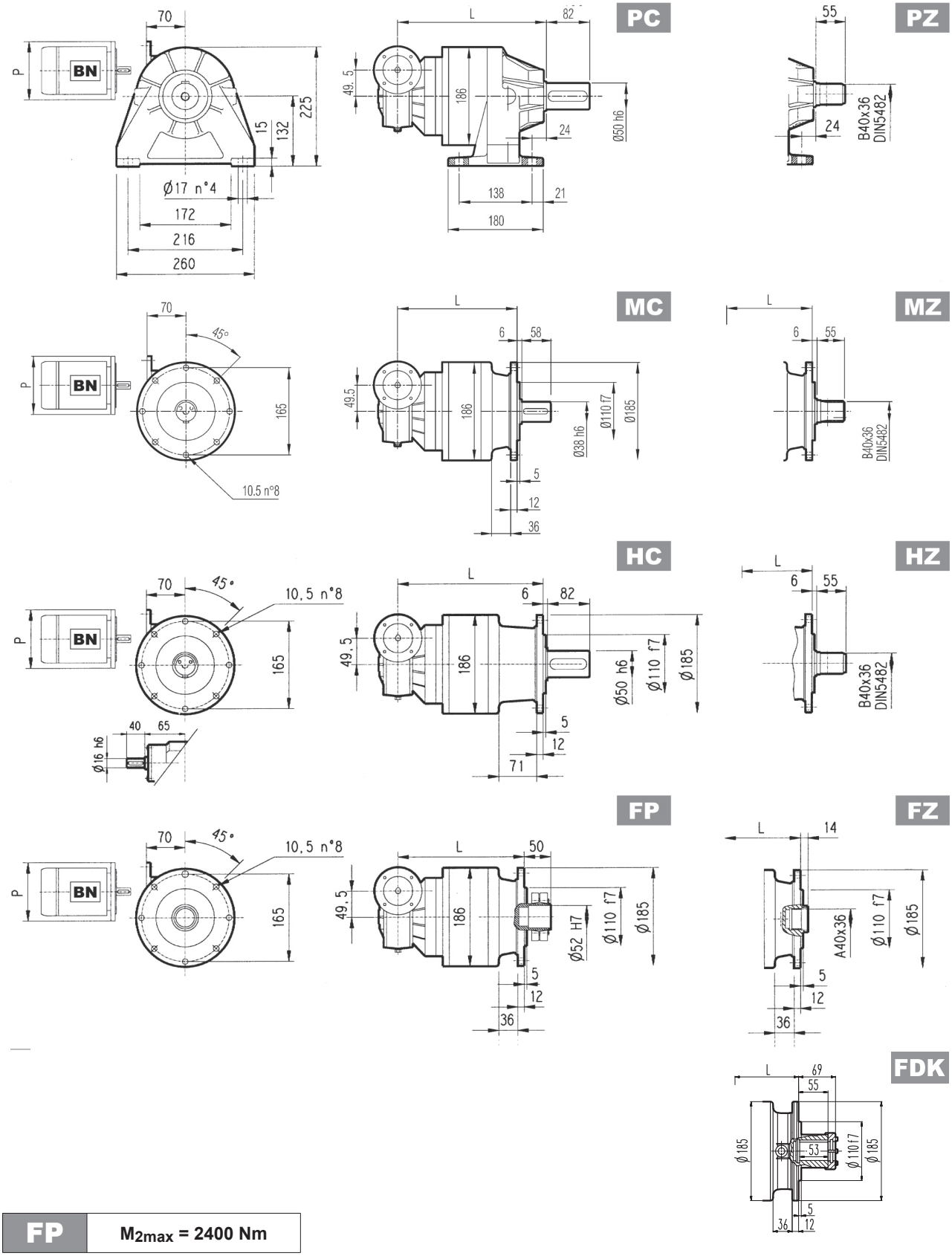

FP	M_{2max} = 2400 Nm

	L				Kg				P63	P71	P80
	MC - MZ	PC - PZ	HC - HZ	FP - FZ - FDK	MC - MZ	PC - PZ	HC - HZ	FP - FZ - FDK	P	P	P
3/V 01 L3	267	308	302	267	28	35	30	26	140	160	200

3/A 01 L2

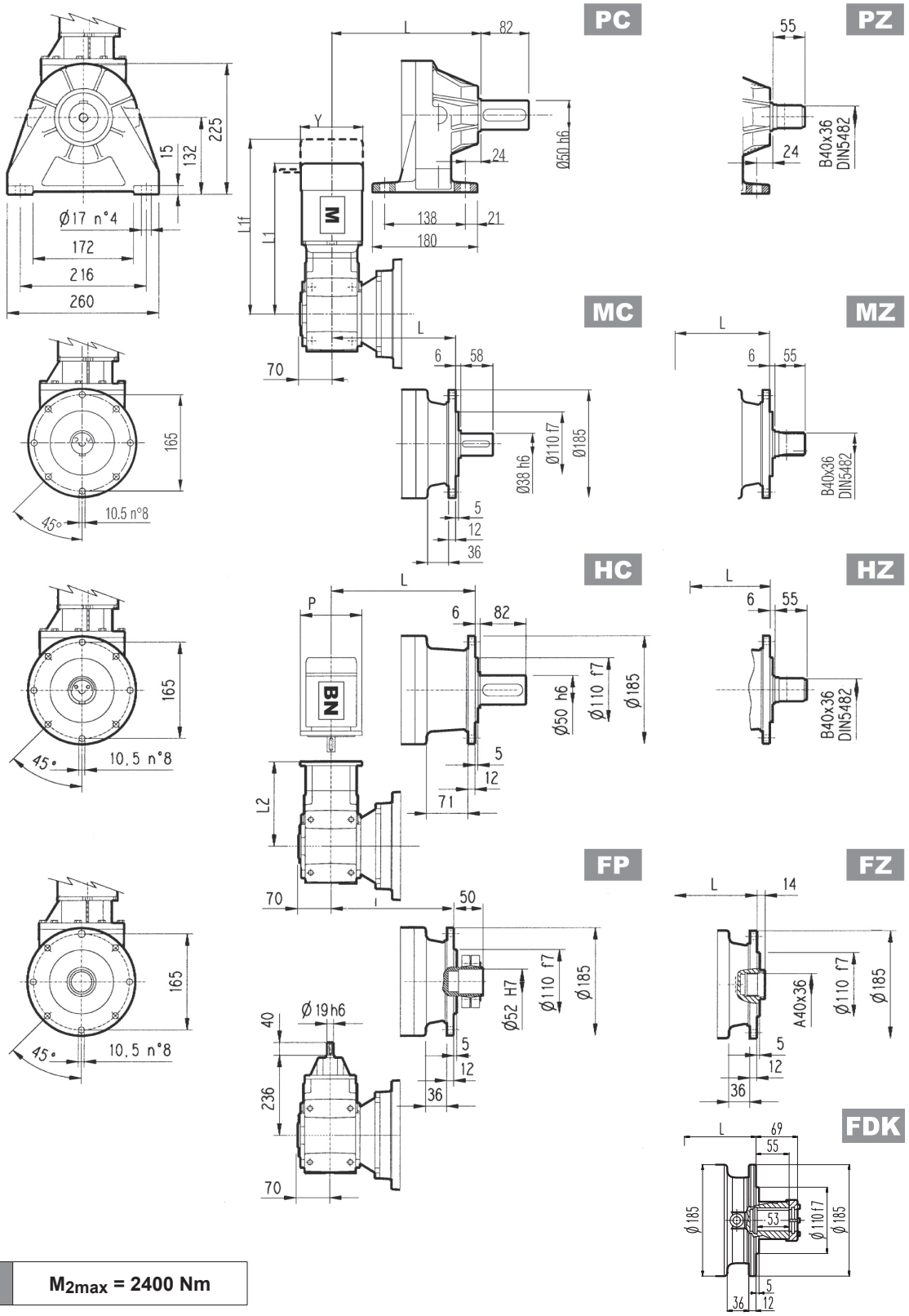

FP	M_{2max} = 2400 Nm

	L				Kg			
	MC - MZ	PC - PZ	HC - HZ	FP - FZ - FDK	MC - MZ	PC - PZ	HC - HZ	FP - FZ - FDK
3/A 01 L2	202	208	237	202	40	46	43	40

	P63		P71		P80		P90		P100		S1 + M1			S2 + M2S			S3 + M3SA			S3 + M3LA		
	L2	P	L2	P	L2	P	L2	P	L2	P	L1	L1f	Y	L1	L1f	Y	L1	L1f	Y	L1	L1f	Y
3/A 01 L2	226	140	226	160	245.5	200	245.5	200	255.5	250	382	442	138	408	480	156	453	549	195	484	577	195

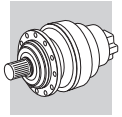

301 L | 301 R | 3/V 01 L3 | 3/A 01 L2

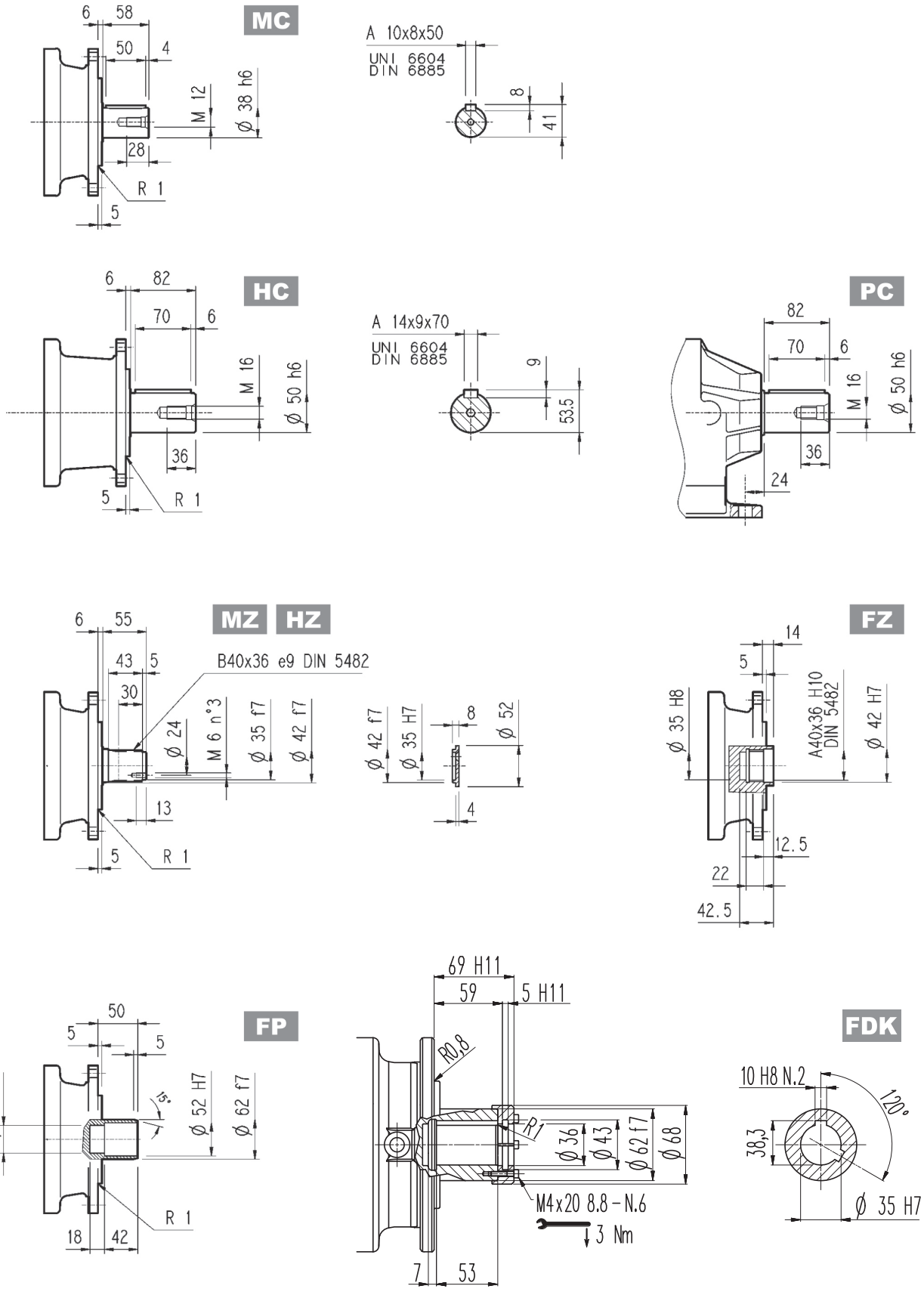

FP	M_{2max} = 2400 Nm

Flangia

W0A

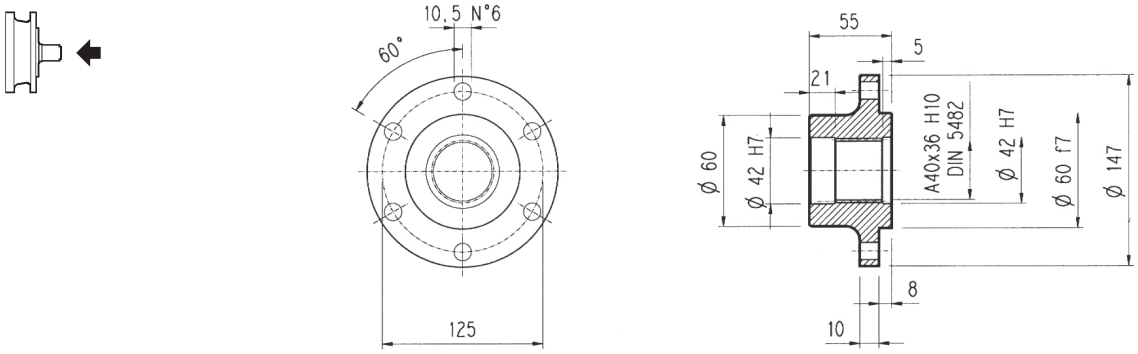

Materiale: Acciaio C40

Pignoni

P...

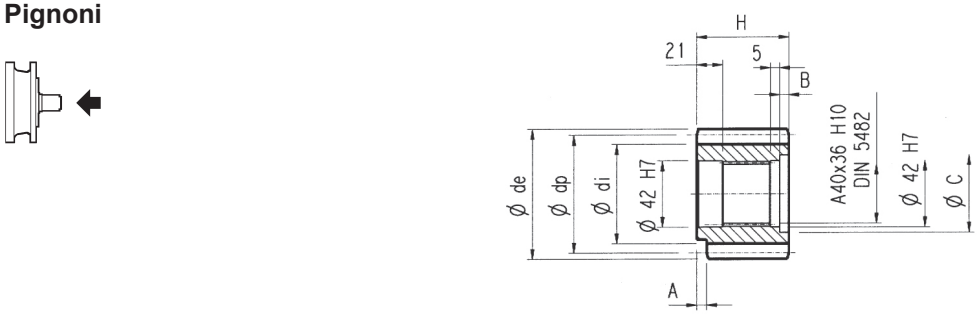

α = 20°

	m	z	x	dp	di	de	H	A	B	C	Materiale
PBE	4.5	14	0.507	63	56	75.5	55	—	—	—	Acciaio 39NiCrMo3 Bonificato
PCE	5	14	0.500	70	62.5	84.8	65	—	10	53	
PDC	6	12	0.250	72	61	84.8	59	14	4	54	
PDE	6	14	0.500	84	73	99.6	65	—	10	54	

Manicotti lisci

M0A

Materiale: Acciaio 16CrNi4

Barre scanalate

B0A

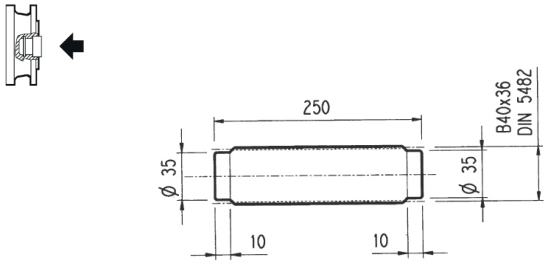

Materiale: Acciaio 18NiCrMo5 UNI 5331
da cementare e temprare 50-55 HRC

Giunto ad attrito

G0A

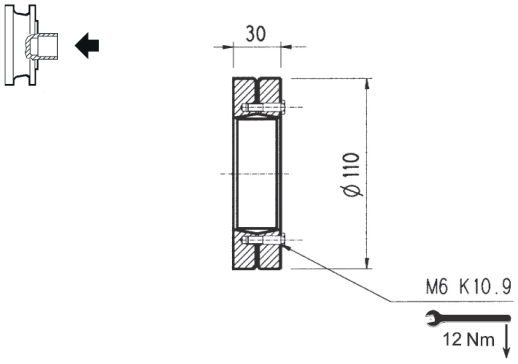

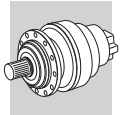

301 L 301 R

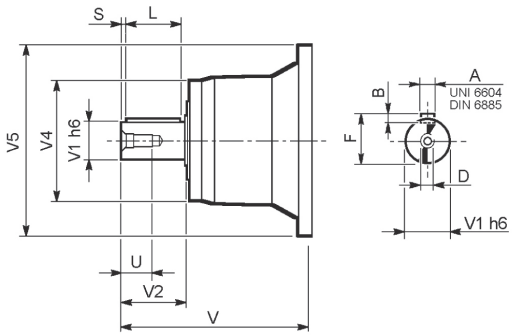

		V	V1	V2	V4	V5	A	B	F	L	S	D	U
301 L1	**V01A**	137.5	24	36	120	186	8	7	27	30	3	M8	19
	V01B	158	38	58	120	186	10	8	41	50	4	M12	28
301 L2	**V01A**	137.5	24	36	120	186	8	7	27	30	3	M8	19
	V01B	158	38	58	120	186	10	8	41	50	4	M12	28
301 L3	**V01A**	137.5	24	36	120	186	8	7	27	30	3	M8	19
	V01B	158	38	58	120	186	10	8	41	50	4	M12	28
301 L4	**V01A**	137.5	24	36	120	186	8	7	27	30	3	M8	19
	V01B	158	38	58	120	186	10	8	41	50	4	M12	28
301 R2-R3-R4	**V01A**	137.5	24	36	120	186	8	7	27	30	3	M8	19
	V01B	158	38	58	120	186	10	8	41	50	4	M12	28

301 L 301 R

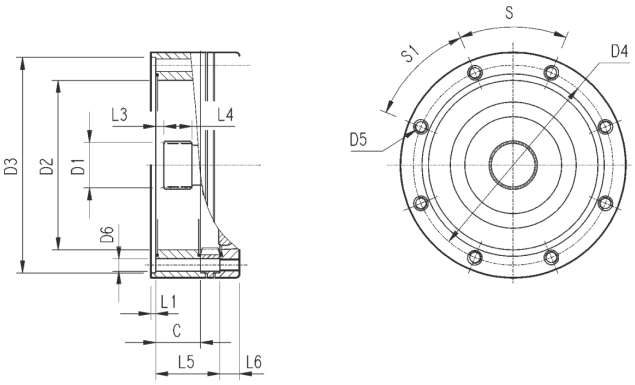

		C	D1	D2	D3	D4	D5	D6	L1	L2	L3	L4	L5	L6	S	S1	Input
301 L1	**V9AA**	37	40x36 DIN5482	140	178 H7	165	M10 n°8	11	4	—	9	18	65	18	45°	45°	A
301 L2	**V9AA**	37	40x36 DIN5482	140	178 H7	165	M10 n°8	11	4	—	9	18	118	18	45°	45°	A
301 L3	**V9AA**	37	40x36 DIN5482	140	178 H7	165	M10 n°8	11	4	—	9	18	171	18	45°	45°	A
301 L4	**V9AA**	37	40x36 DIN5482	140	178 H7	165	M10 n°8	11	4	—	9	18	224	18	45°	45°	A
301 R2-R3-R4	**V9AA**	37	40x36 DIN5482	140	178 H7	165	M10 n°8	11	4	—	9	18	37	18	45°	45°	A

3/V 01 L3

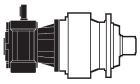

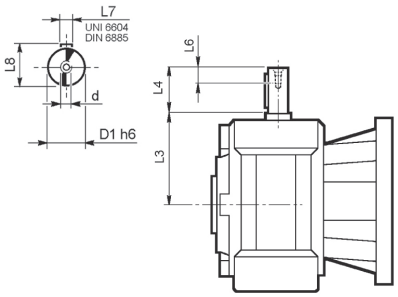

	D1 h6	L3	L4	L6	L7	L8	d
3/V 01 L3_HS	16	65	40	16	5	18	M6

3/A 01 L2

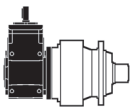

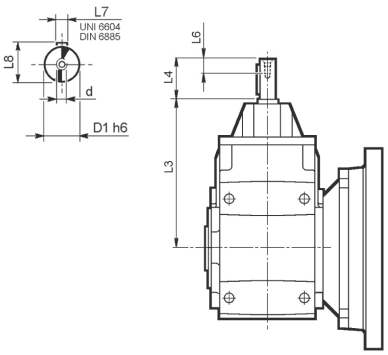

	D1 h6	L3	L4	L6	L7	L8	d
3/A 01 L2_HS	19	235.5	40	16	6	21.5	M6

Carichi radiali ed assiali ammissibili sull'albero lento per un valore di $Fh_2 : n_2 \cdot h = 100000$

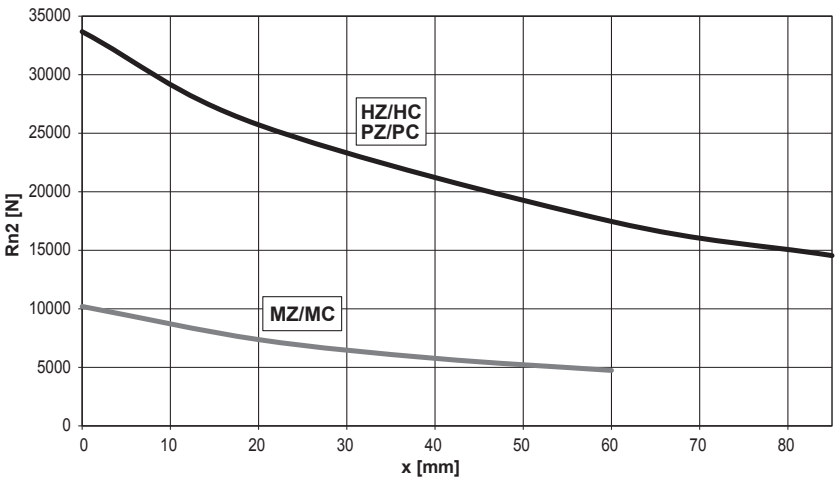

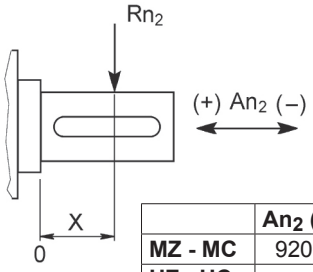

	An_2 (+)	An_2 (-)
MZ - MC	9200	6900
HZ - HC PZ - PC	20000	20000

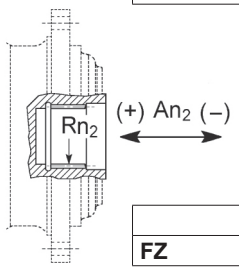

	Rn_2	An_2 (+/-)
FZ	3713	3713

Fattore fh_2 correttivo per carichi sugli alberi	$Fh_2 = n_2 \cdot h$		10000	25000	50000	100000	500000	1000000
	fh_2	FZ	**2.15**	**1.59**	**1.26**	**1.00**	**0.58**	**0.46**
		MZ - MC	**2.15**	**1.59**	**1.26**	**1.00**	**0.58**	**0.46**
		HZ - HC - PZ - PC	**1.27**	**1.27**	**1.26**	**1.00**	**0.62**	**0.50**

Carichi radiali ammissibili sull'albero veloce per un valore di $Fh_1 : n_1 \cdot h = 250000$

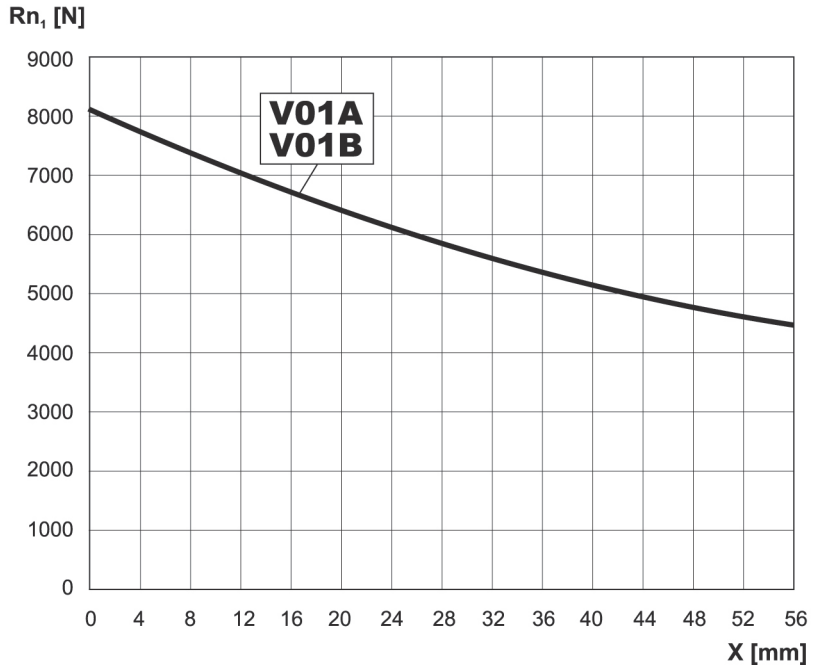

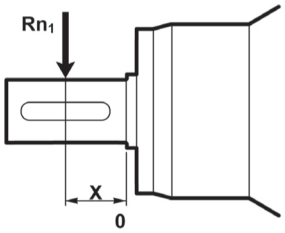

Fattore fh_1 correttivo per carichi sugli alberi	$Fh_1 = n_1 \cdot h$	250000	500000	1000000	2000000	5000000	10000000
	fh_1	**1**	**0.79**	**0.63**	**0.50**	**0.37**	**0.29**

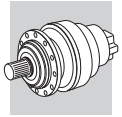

303 L

	Hydraulic motor										
	MG							471			Kg
cm³	050	080	100	125	160	200	250				
	M1							M2	M3	M4	
303 L1	—	—	—	—	203	210	219	135	77	1/4G	20
303 L2	162	167	171	175	181	188	—	113	60	1/4G	14

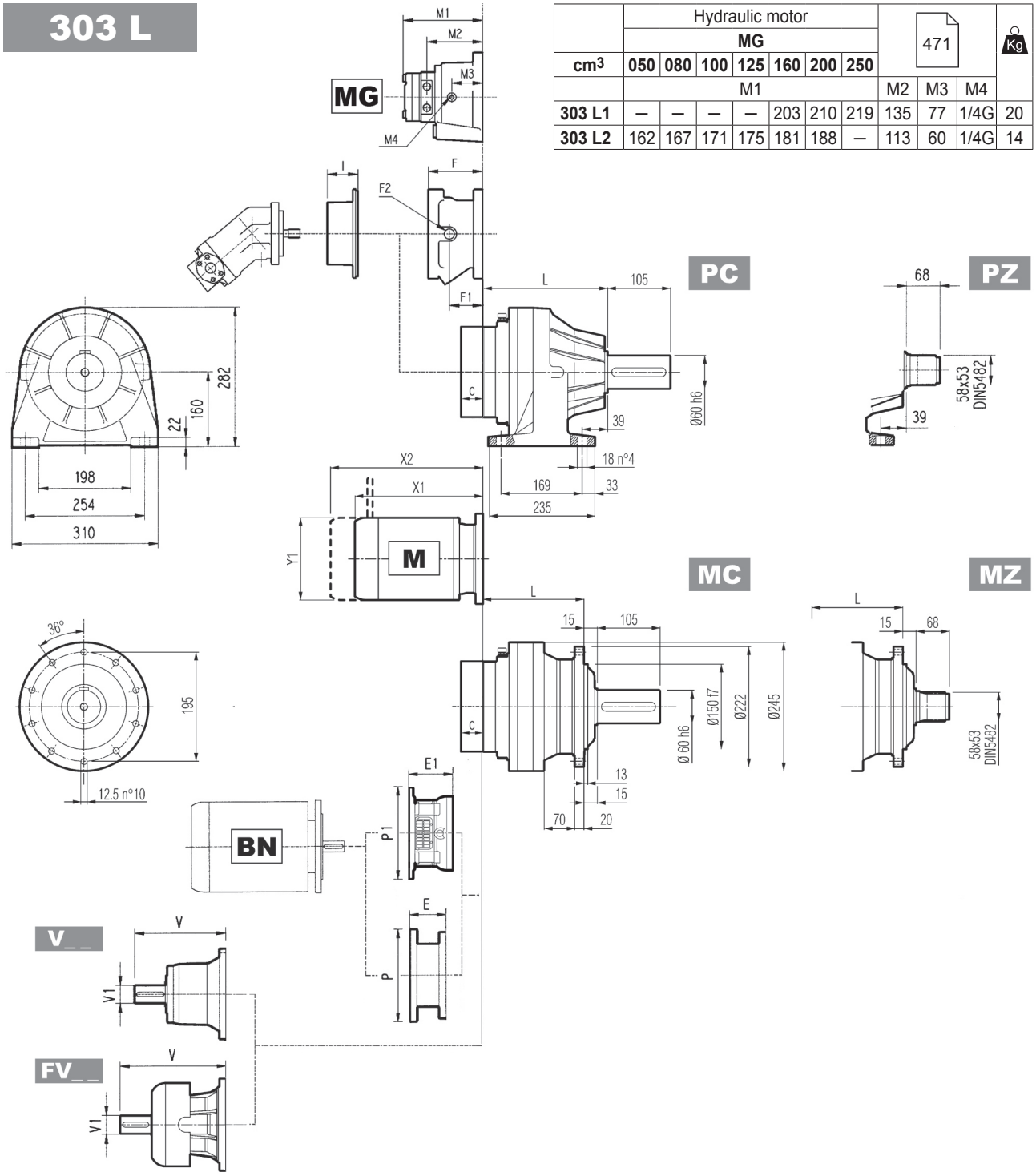

	L				Kg			
	MC - MZ	PC - PZ	HC - HZ	FP - FZ - FDK	MC - MZ	PC - PZ	HC - HZ	FP - FZ - FDK
303 L1	125	165	150	125	31	40	35	31
303 L2	178	218	203	178	35	44	39	35
303 L3	231	271	256	231	39	48	43	39
303 L4	284	324	309	284	43	52	47	43

	V	V1	Kg	V	V1	Kg	V	V1	Kg	V	V1	Kg	C	Input	I	F	F1	F2	Type	Input	Kg
303 L1	239	48	15	—	—	—	276	48	17	—	—	—	37	A	461	145	95	1/4 G	5	A	16
303 L2	137.5	24	6	158	38	7	—	—	—	—	—	—	37	A		105	65	1/4 G	4	A	10
303 L3	137.5	24	6	158	38	7	—	—	—	—	—	—	37	A		105	65	1/4 G	4	A	10
303 L4	137.5	24	6	158	38	7	—	—	—	—	—	—	37	A		105	65	1/4 G	4	A	10

303 L

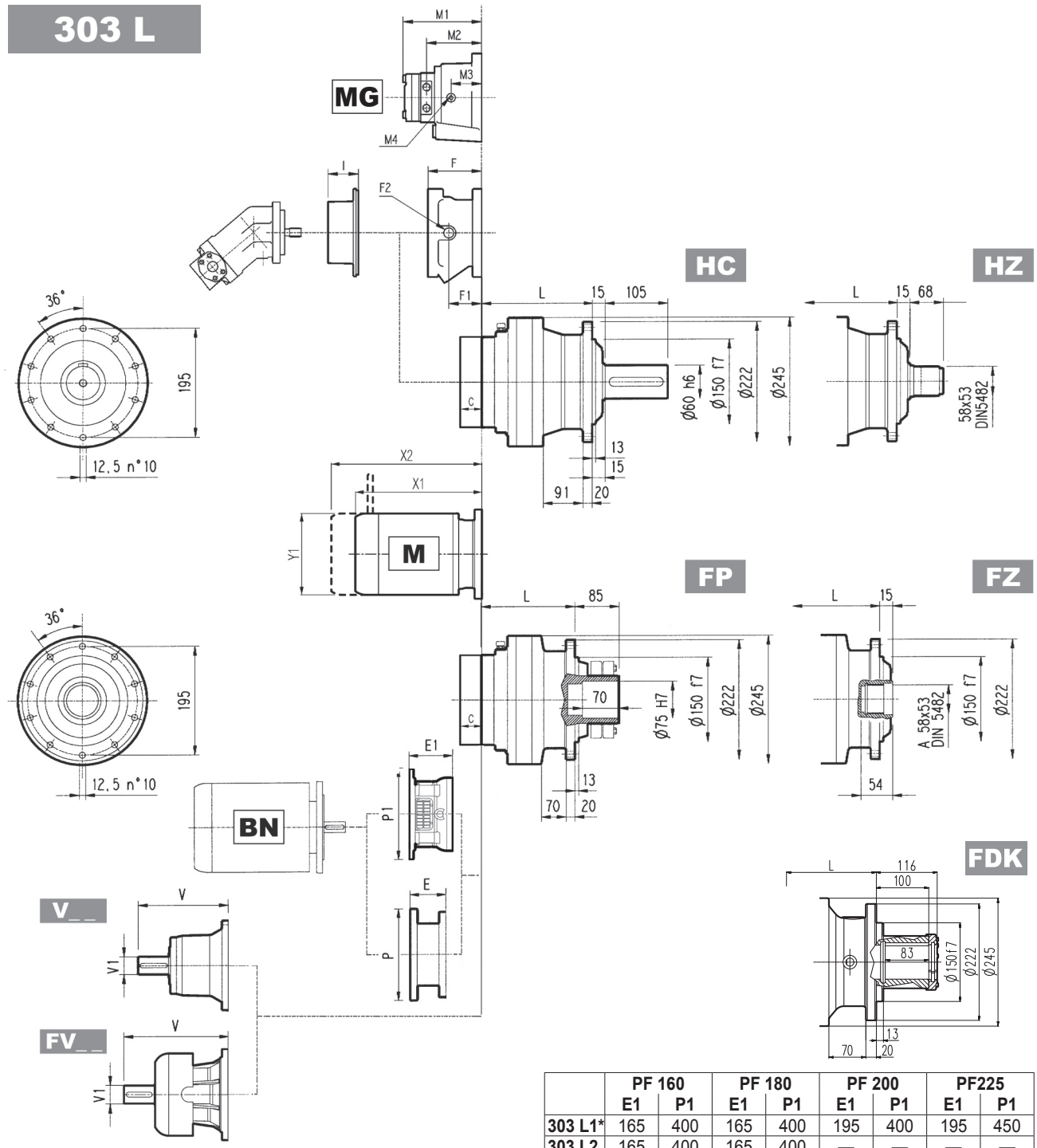

	PF 160		PF 180		PF 200		PF225	
	E1	P1	E1	P1	E1	P1	E1	P1
303 L1*	165	400	165	400	195	400	195	450
303 L2	165	400	165	400	—	—	—	—
303 L3	165	400	165	400	—	—	—	—

FP | **M_{2max} = 5200 Nm**

(*) per versioni PC-PZ contattare il Servizio Tecnico Bonfiglioli
NOTA: Per esecuzione R contattare il Servizio Tecnico Bonfiglioli

	P71		P80		P90		P100		P112		P132		P160		P180		P200	
	E	P	E	P	E	P	E	P	E	P	E	P	E	P	E	P	E	P
303 L1	—	—	—	—	—	—	—	—	—	—	114	300	144	350	144	350	174	400
303 L2	65	160	84	200	84	200	94	250	94	250	114	300	144	350	—	—	—	—
303 L3	65	160	84	200	84	200	94	250	94	250	114	300	144	350	—	—	—	—
303 L4	65	160	84	200	84	200	94	250	94	250	114	300	144	350	—	—	—	—

	S1 + M1			S2 + M2S			S3 + M3S			S3 + M3L			S4 + M4			S5 + M5S			S5 + M5L		
	X1	X2	Y1	X1	X2	Y1	X1	X2	Y1	X1	X2	Y1	X1	X2	Y1	X1	X2	Y1	X1	X2	Y1
303 L1	—	—	—	—	—	—	—	—	—	—	—	—	460	571	258	552	692	310	596	736	310
303 L2	253	314	138	280	352	156	325	421	195	357	449	195	460	571	258	—	—	—	—	—	—
303 L3	253	314	138	280	352	156	325	421	195	357	449	195	460	571	258	—	—	—	—	—	—
303 L4	253	314	138	280	352	156	325	421	195	357	449	195	460	571	258	—	—	—	—	—	—

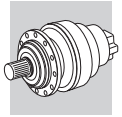

303 R

	Hydraulic motor										
	MG							471			Kg
cm³	050	080	100	125	160	200	250				
	M1							M2	M3	M4	
303 R2	162	167	171	175	181	188	–	113	60	1/4G	14

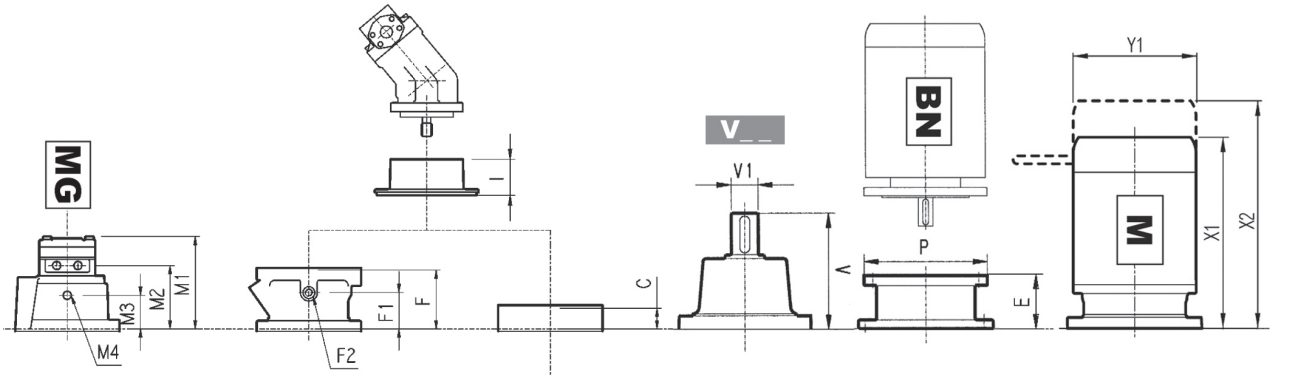

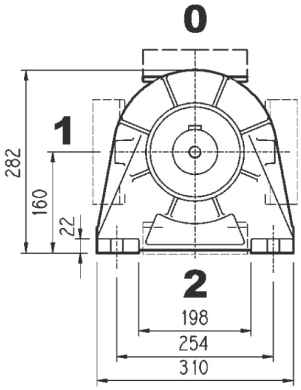

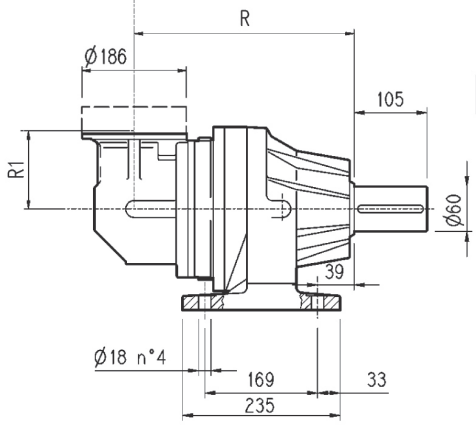

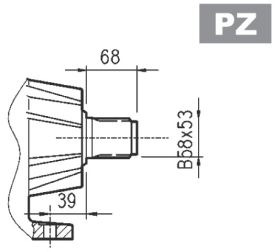

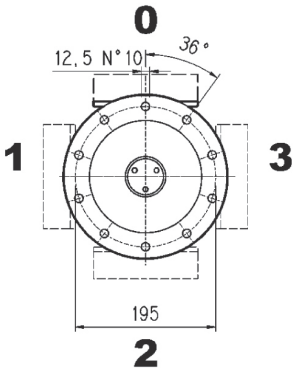

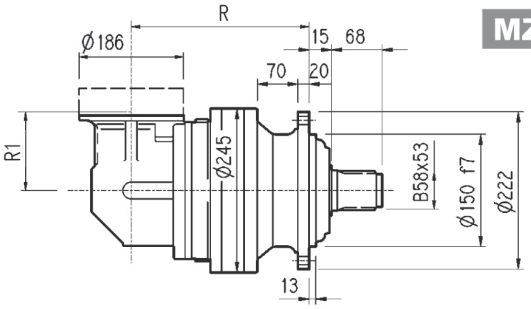

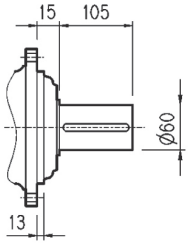

	R				R1	Kg			
	MC - MZ	PC - PZ	HC - HZ	FP - FZ - FDK		MC - MZ	PC - PZ	HC - HZ	FP - FZ - FDK
303 R2	217	257	242	217	140	51	60	55	51
303 R3	270	310	295	270	122	49	58	53	49
303 R4	323	363	348	323	122	53	62	57	53

	V	V1	Kg	V	V1	Kg	C	Input	I	F	F1	F2	Type	Input	Kg
303 R2	137.5	24	6	158	38	7	37	A		105	65	1/4 G	4	A	10
303 R3	137.5	24	6	158	38	7	37	A		105	65	1/4 G	4	A	10
303 R4	137.5	24	6	158	38	7	37	A	461	105	65	1/4 G	4	A	10

303 R

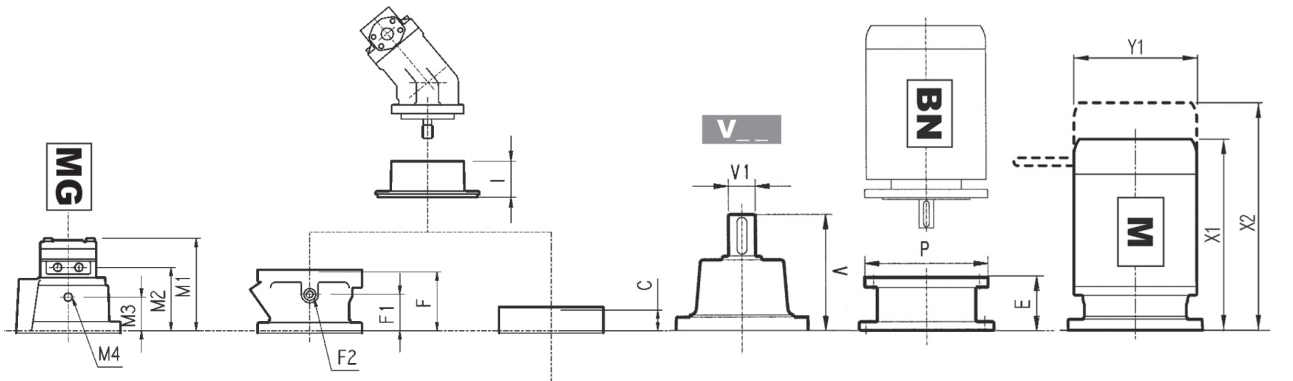

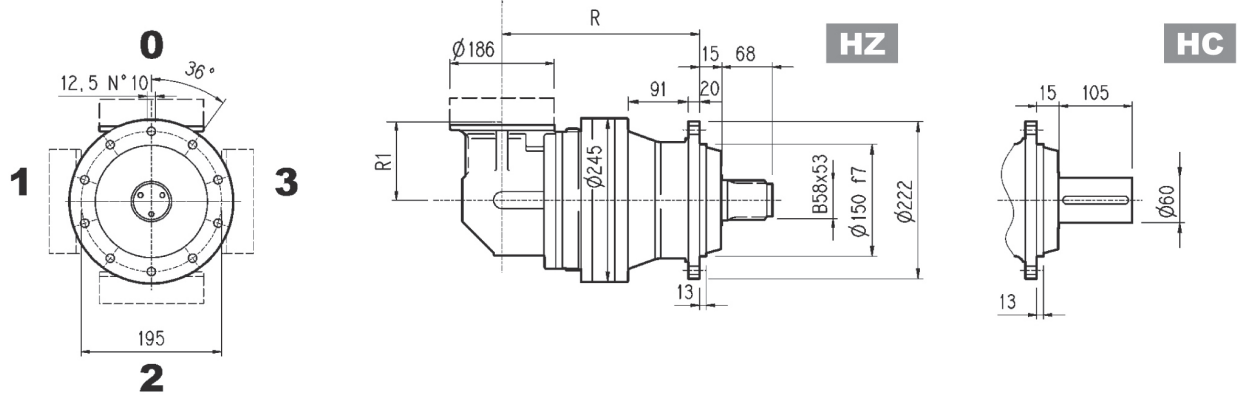

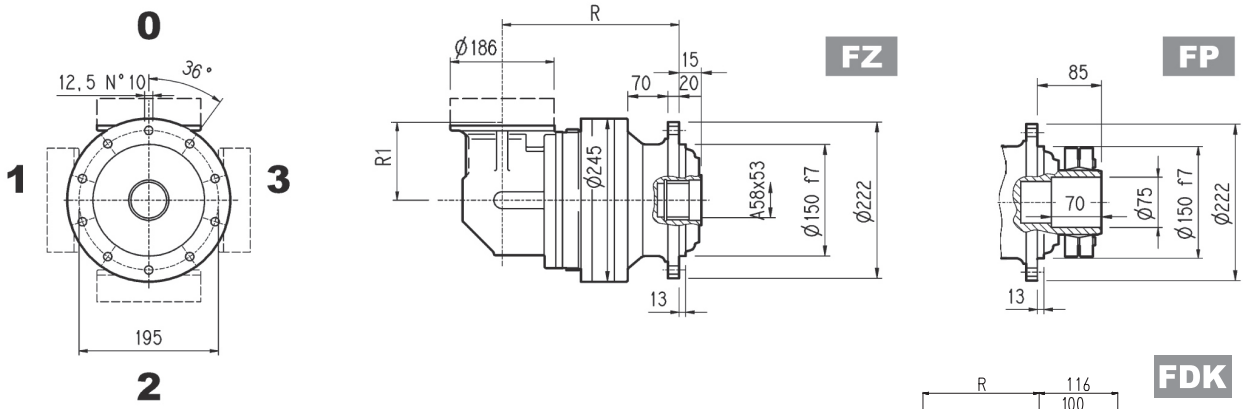

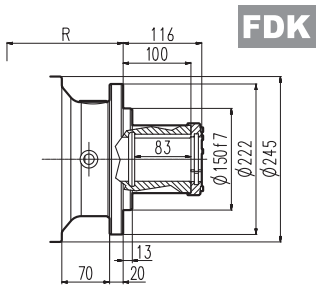

FP	M_{2max} = 5200 Nm

	P71		P80		P90		P100		P112		P132	
	E	P	E	P	E	P	E	P	E	P	E	P
303 R2	65	160	84	200	84	200	94	250	94	250	114	300
303 R3	65	160	84	200	84	200	94	250	94	250	114	300
303 R4	65	160	84	200	84	200	94	250	94	250	114	300

	S1 + M1			S2 + M2S			S3 + M3S			S3 + M3L			S4 + M4		
	X1	X2	Y1	X1	X2	Y1	X1	X2	Y1	X1	X2	Y1	X1	X2	Y1
303 R2	—	—	—	328	400	156	373	469	195	405	497	195	508	619	258
303 R3	253	314	138	328	400	156	373	469	195	405	497	195	—	—	—
303 R4	253	314	138	328	400	156	373	469	195	405	497	195	—	—	—

3/V 03 L3

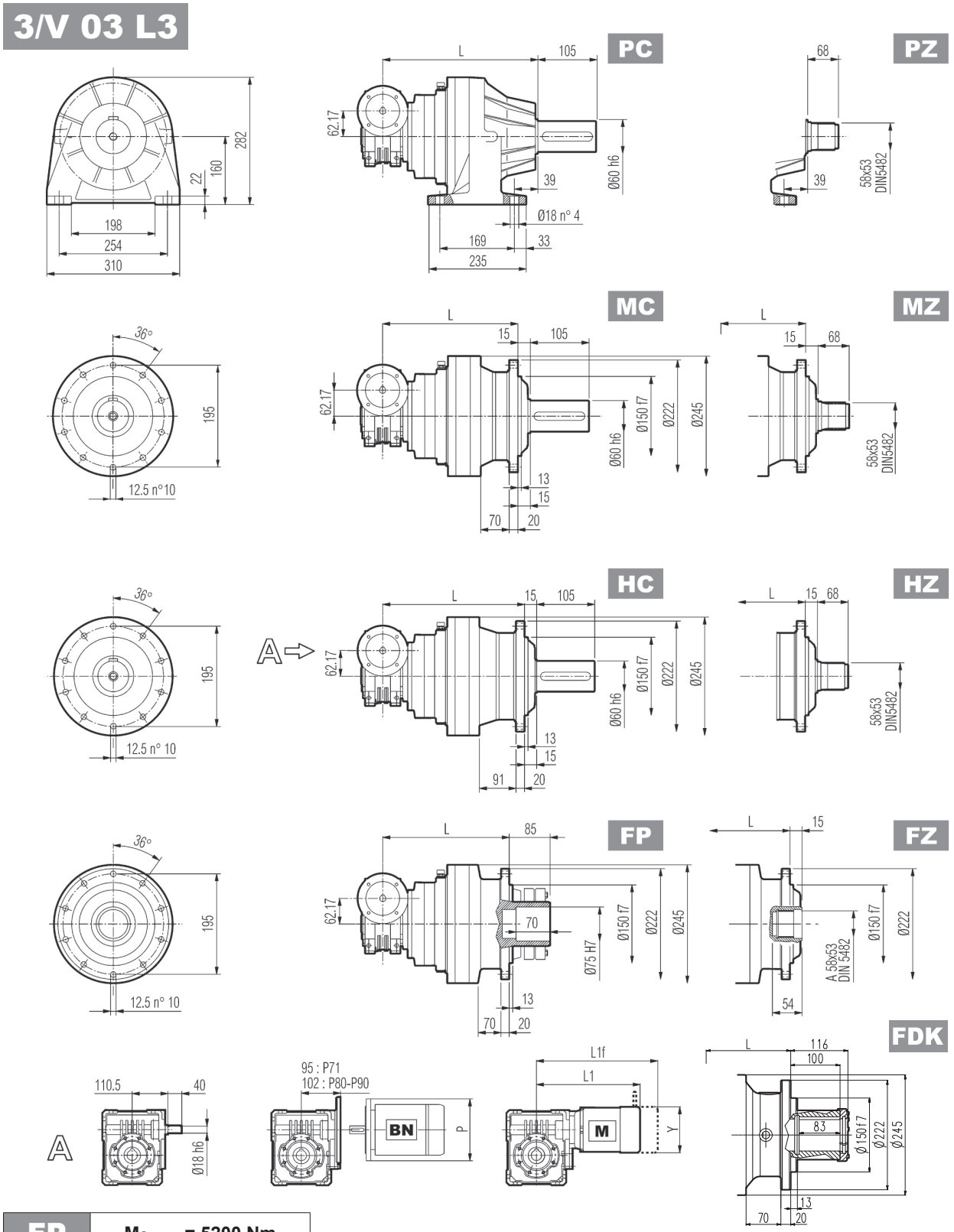

FP	M_{2max} = 5200 Nm

	L				Kg			
	MC - MZ	PC - PZ	HC - HZ	FP - FZ - FDK	MC - MZ	PC - PZ	HC - HZ	FP - FZ - FDK
3/V 03 L3	270	330	315	270	43	51	45	41

	P71	P80	P90	S1 + M1			S2 + M2S		
	P	P	P	L1	L1f	Y	L1	L1f	Y
3/V 03 L3	160	200	200	289	350	138	317	393	156

3/A 03 L2

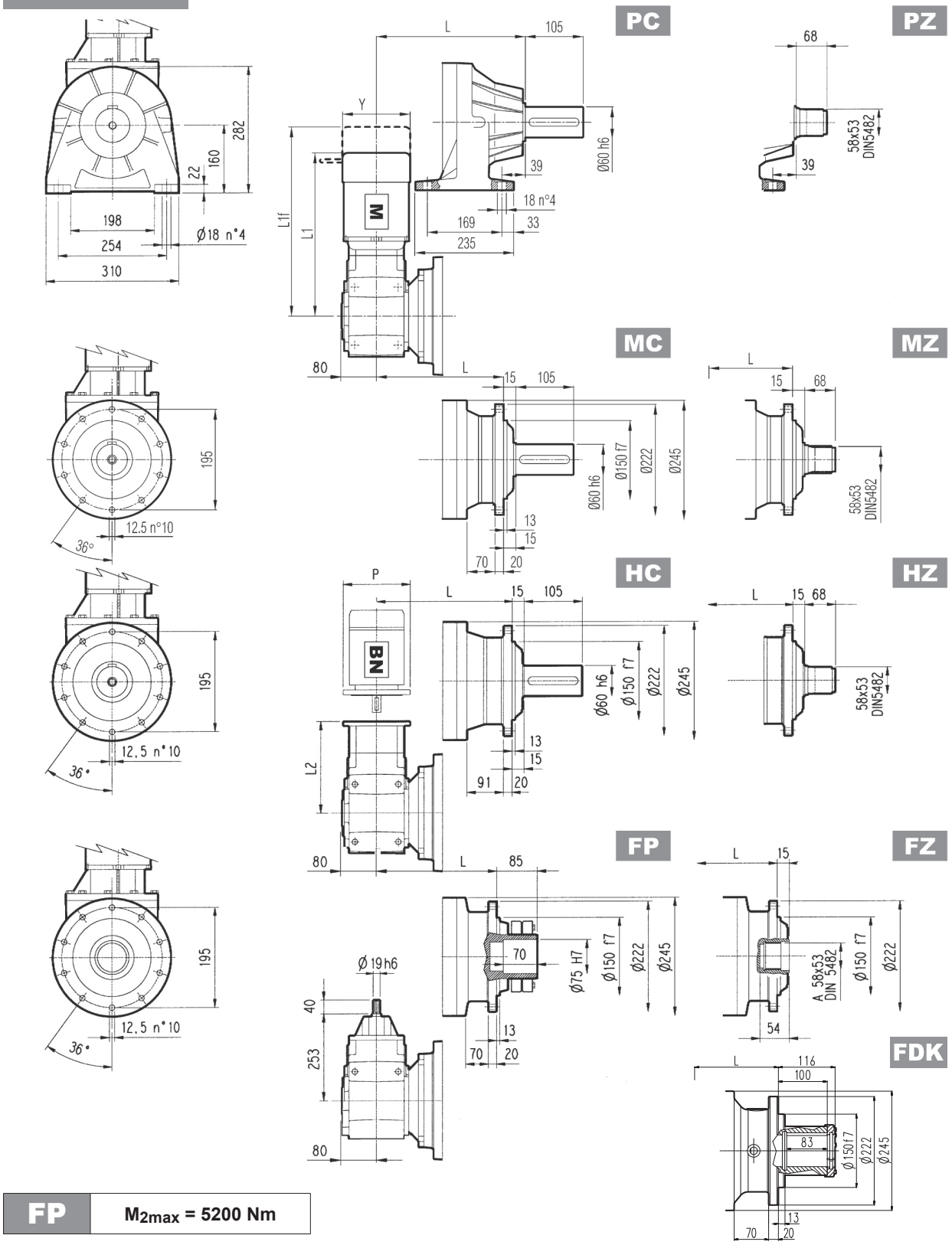

FP	M_{2max} = 5200 Nm

	L				Kg			
	MC - MZ	PC - PZ	HC - HZ	FP - FZ - FDK	MC - MZ	PC - PZ	HC - HZ	FP - FZ - FDK
3/A 03 L2	225	285	270	225	63	71	65	60

	P63		P71		P80		P90		P100		P112		S1 + M1			S2 + M2S			S3 + M3SA			S3 + M3LA		
	L2	P	L2	P	L2	P	L2	P	L2	P	L2	P	L1	L1f	Y	L1	L1f	Y	L1	L1f	Y	L1	L1f	Y
3/A 03 L2	243	140	243	160	262	200	262	200	272	250	272	250	399	416	138	425	497	156	470	467	195	501	518	195

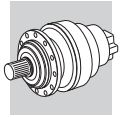

303 L | 303 R | 3/V 03 L3 | 3/A 03 L2

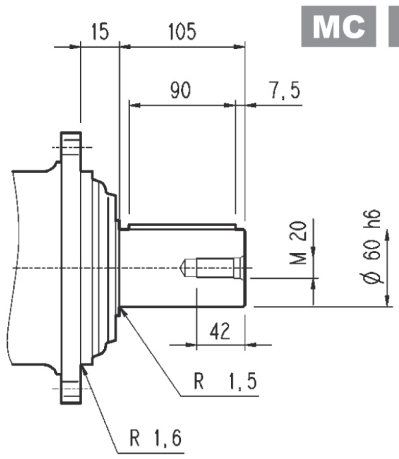

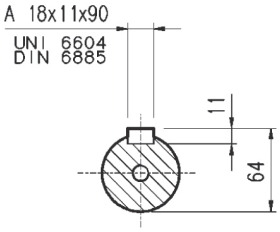

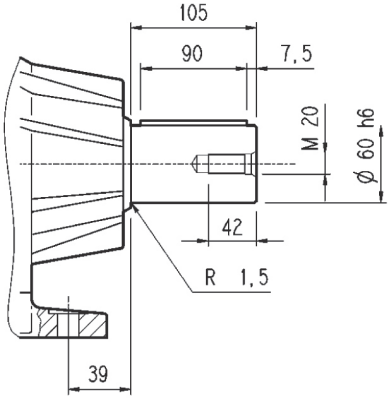

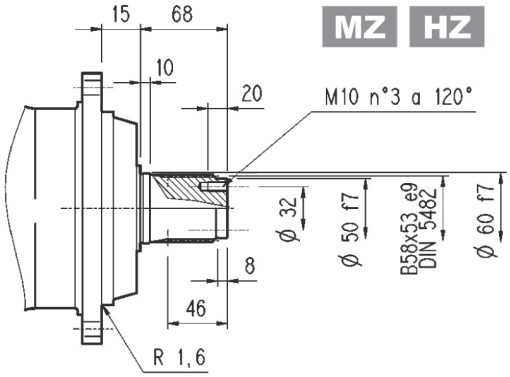

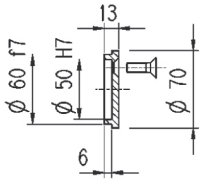

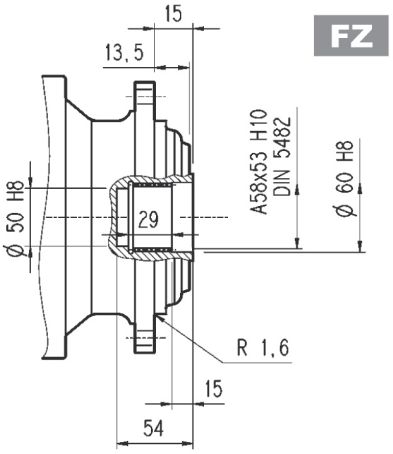

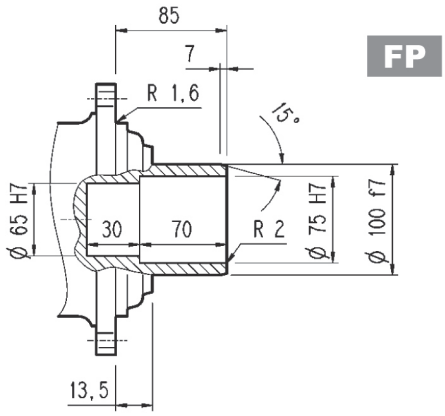

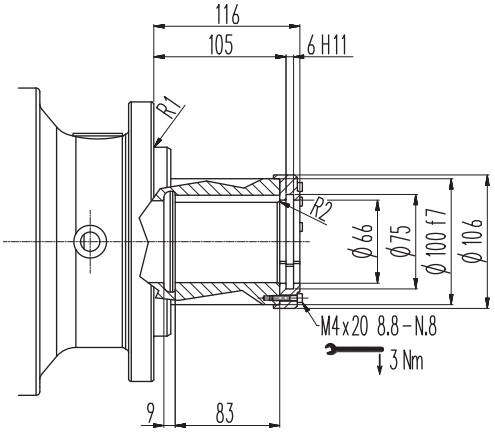

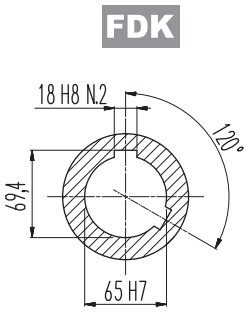

FP	M_{2max} = 5200 Nm

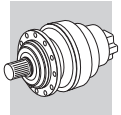

303 L | 303 R | 3/V 03 L3 | 3/A 03 L2

Flangia

W0A

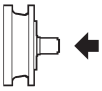

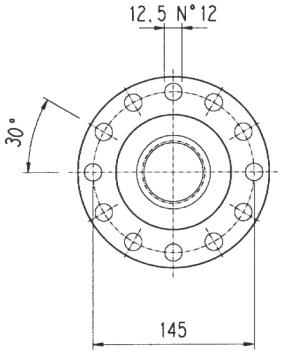

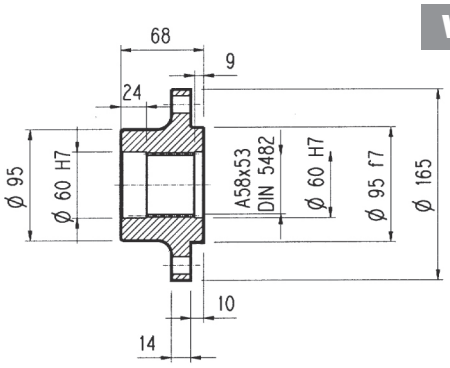

Materiale: Acciaio C40

Pignoni

P...

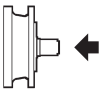

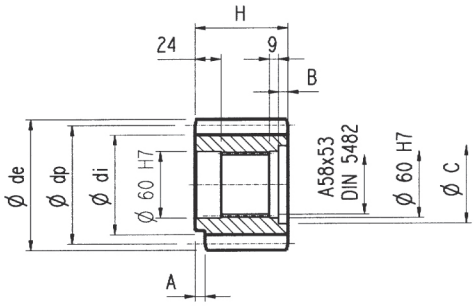

α = 20°

	m	z	x	dp	di	de	H	A	B	C	Materiale
PCL1	5	19	—	95	82	104	77	12	9	72	Acciaio 39NiCrMo3 Bonificato
PCL2	5	19	—	95	82	104	68	—	—	—	
PCM	5	20	—	100	87.5	110	68	18	—	—	Acciaio 18NiCrMo5 Cementato e temprato
PCP	5	22	—	110	97.5	120	68	18	—	—	
PDE	6	14	0.500	84	75	99.6	68	—	—	—	Acciaio 39NiCrMo3 Bonificato
PDI	6	18	0.500	108	99	123.6	68	—	—	—	
PDM	6	20	0.833	120	115	140	68	—	—	—	
PFD	8	13	0.675	104	95	127.6	68	—	—	—	Acciaio 18NiCrMo5 Cementato e temprato
PFE1	8	14	—	112	92	126	68	—	—	—	
PFE2	8	14	—	112	92	126	80	—	12	72	
PFF	8	15	—	120	100	136	68	—	—	—	Acciaio 39NiCrMo3 Bonificato
PFP	8	22	—	176	156	190	77	12	10	71	
PHG	10	16	0.500	160	145	188	75	—	7	72	

Manicotti lisci

M0A

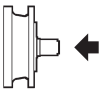

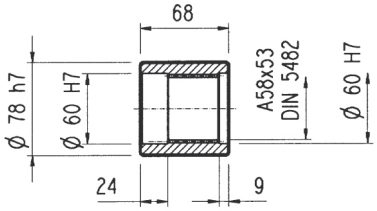

Materiale: Acciaio 16CrNi4

Barre scanalate

B0A

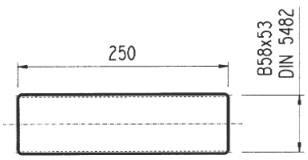

Materiale: Acciaio 18NiCrMo5 UNI 5331
da cementare e temprare 50-55 HRC

Giunto ad attrito

G0A

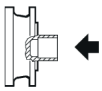

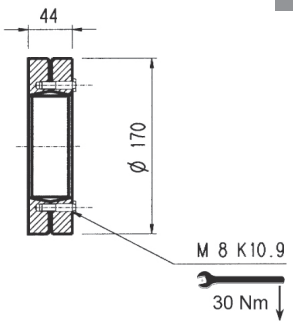

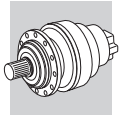

303 L 303 R

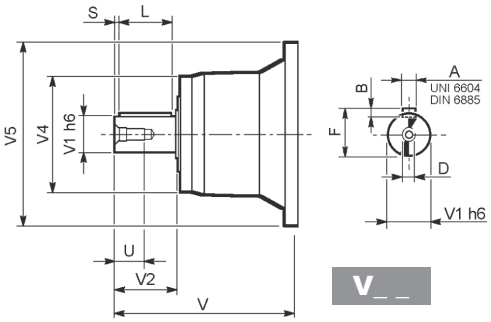

V_ _

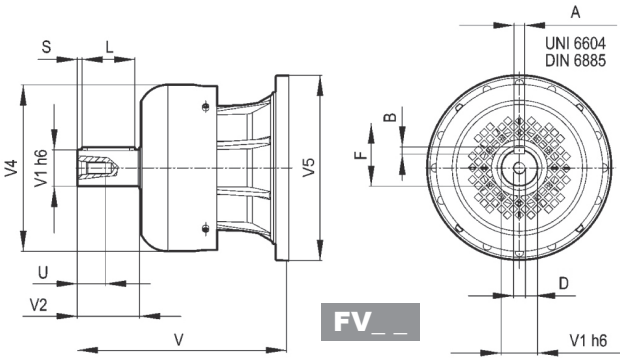

FV_ _

		V	V1	V2	V4	V5	A	B	F	L	S	D	U
303 L1	**V05B**	239	48	82	155	245	14	9	51.5	70	6	M16	36
	FV05B	276	48	82	219.5	244	14	9	51.5	70	6	M16	36
303 L2	**V01A**	137.5	24	36	120	186	8	7	27	30	3	M8	19
	V01B	158	38	58	120	186	10	8	41	50	4	M12	28
303 L3	**V01A**	137.5	24	36	120	186	8	7	27	30	3	M8	19
	V01B	158	38	58	120	186	10	8	41	50	4	M12	28
303 L4	**V01A**	137.5	24	36	120	186	8	7	27	30	3	M8	19
	V01B	158	38	58	120	186	10	8	41	50	4	M12	28
303 R2-R3-R4	**V01A**	137.5	24	36	120	186	8	7	27	30	3	M8	19
	V01B	158	38	58	120	186	10	8	41	50	4	M12	28

303 L 303 R

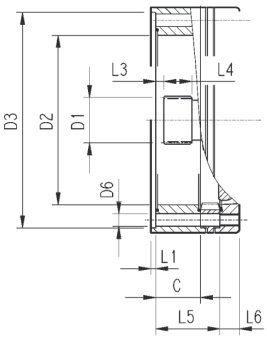

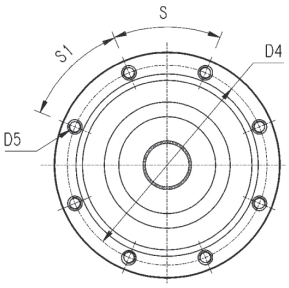

		C	D1	D2	D3	D4	D5	D6	L1	L2	L3	L4	L5	L6	S	S1	Input
303 L1	**V9AA**	37	40x36 DIN5482	140	178 H7	165	M10 n°8	11	4	—	9	18	—	18	45°	45°	A
303 L2	**V9AA**	37	40x36 DIN5482	140	178 H7	165	M10 n°8	11	4	—	9	18	53	18	45°	45°	A
303 L3	**V9AA**	37	40x36 DIN5482	140	178 H7	165	M10 n°8	11	4	—	9	18	106	18	45°	45°	A
303 L4	**V9AA**	37	40x36 DIN5482	140	178 H7	165	M10 n°8	11	4	—	9	18	159	18	45°	45°	A
303 R2-R3-R4	**V9AA**	37	40x36 DIN5482	140	178 H7	165	M10 n°8	11	4	—	9	18	37	18	45°	45°	A

3/V 03 L3

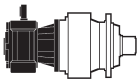

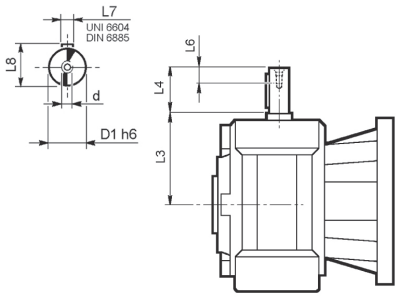

	D1 h6	L3	L4	L6	L7	L8	d
3/V 03 L3_HS	18	110.5	40	16	6	20.5	M6

3/A 03 L2

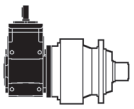

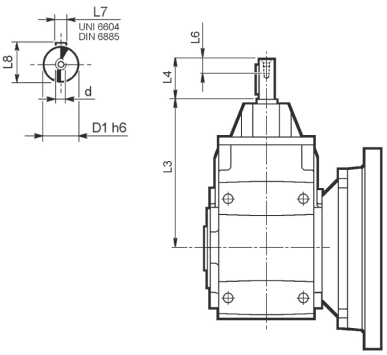

	D1 h6	L3	L4	L6	L7	L8	d
3/A 03 L2_HS	19	252.5	40	16	6	21.5	M6

Carichi radiali ed assiali ammissibili sull'albero lento per un valore di $Fh_2 : n_2 \cdot h = 100000$

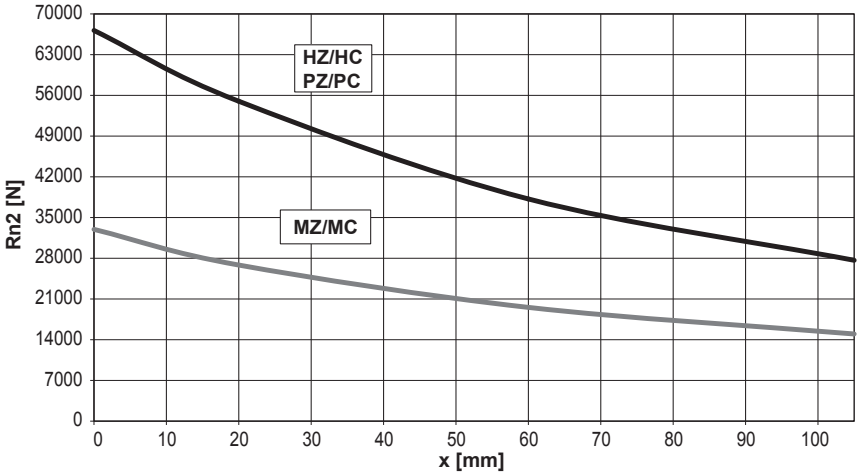

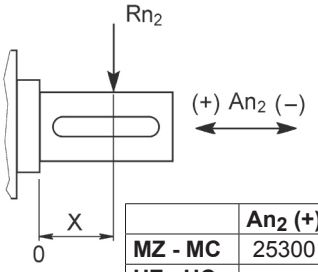

	An_2 (+)	An_2 (-)
MZ - MC	25300	20240
HZ - HC PZ - PC	27500	22000

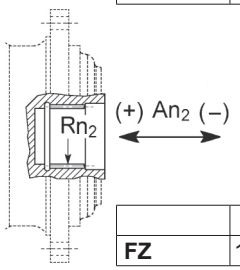

	Rn_2	An_2 (+/-)
FZ	11140	11604

Fattore fh_2 correttivo per carichi sugli alberi	$Fh_2 = n_2 \cdot h$		10000	25000	50000	100000	500000	1000000
	fh_2	FZ	**2.15**	**1.59**	**1.26**	**1.00**	**0.58**	**0.46**
		MZ - MC	**2.15**	**1.59**	**1.26**	**1.00**	**0.58**	**0.46**
		HZ - HC - PZ - PC	**1.48**	**1.48**	**1.23**	**1.00**	**0.62**	**0.50**

Carichi radiali ammissibili sull'albero veloce per un valore di $Fh_1 : n_1 \cdot h = 250000$

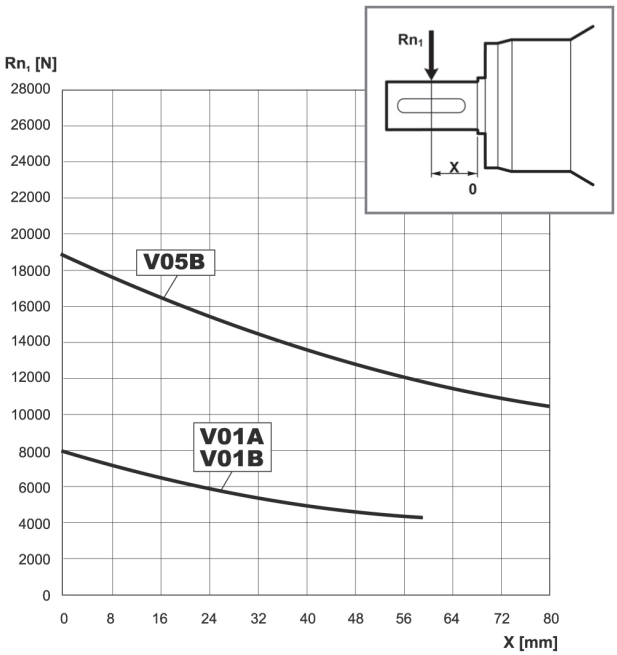

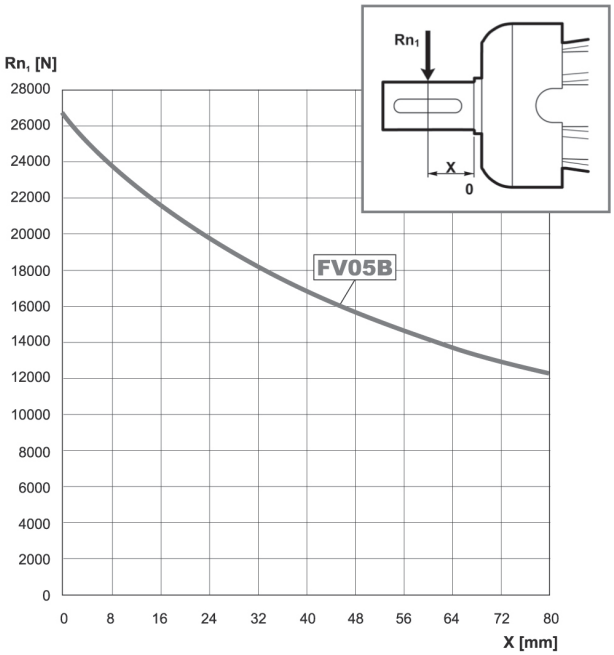

Fattore fh_1 correttivo per carichi sugli alberi	$Fh_1 = n_1 \cdot h$	250000	500000	1000000	2000000	5000000	10000000
	fh_1	**1**	**0.79**	**0.63**	**0.50**	**0.37**	**0.29**

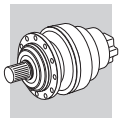

303 VK

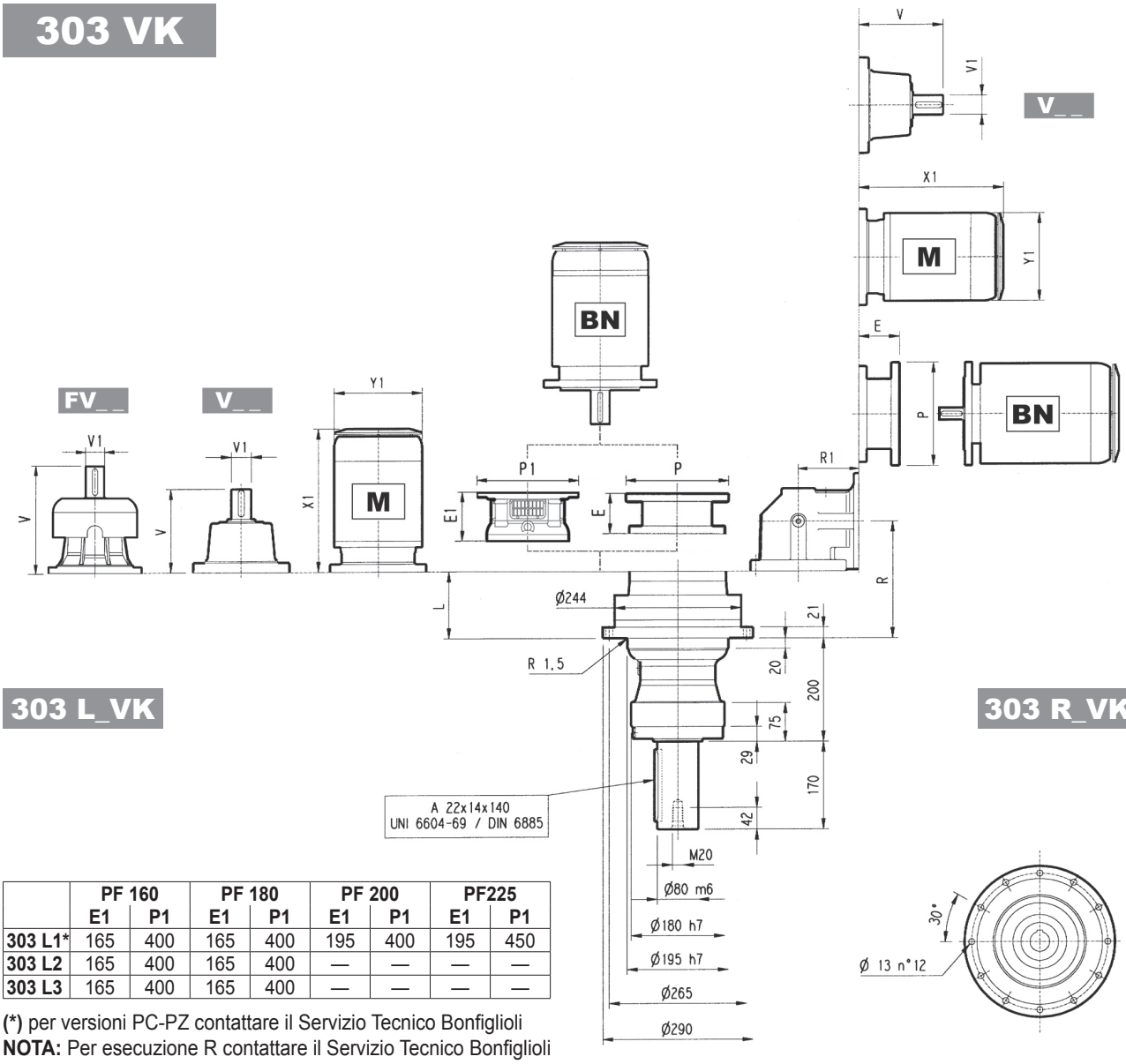

303 L_VK

303 R_VK

	PF 160		PF 180		PF 200		PF225	
	E1	P1	E1	P1	E1	P1	E1	P1
303 L1*	165	400	165	400	195	400	195	450
303 L2	165	400	165	400	—	—	—	—
303 L3	165	400	165	400	—	—	—	—

(*) per versioni PC-PZ contattare il Servizio Tecnico Bonfiglioli
NOTA: Per esecuzione R contattare il Servizio Tecnico Bonfiglioli

	L	Kg	V	V1	Kg	V	V1	Kg	V	V1	Kg	V	V1	Kg	P71		P80		P90		P100		P112		P132		P160		P180		P200	
															E	P	E	P	E	P	E	P	E	P	E	P	E	P	E	P	E	P
303 L1	51	65	239	48	15	—	—	—	276	48	17	—	—	—	—	—	—	—	—	—	—	—	—	—	114	300	144	350	144	350	174	400
303 L2	104	70	137.5	24	6	158	38	7	—	—	—	—	—	—	65	160	84	200	84	200	94	250	94	250	114	300	144	350	—	—	—	—
303 L3	157	73	137.5	24	6	158	38	7	—	—	—	—	—	—	65	160	84	200	84	200	94	250	94	250	114	300	144	350	—	—	—	—
303 L4	210	77	137.5	24	6	158	38	7	—	—	—	—	—	—	65	160	84	200	84	200	94	250	94	250	114	300	144	350	—	—	—	—

	S1 + M1			S2 + M2S			S3 + M3S			S3 + M3L			S4 + M4			S5 + M5S			S5 + M5L		
	X1	X2	Y1	X1	X2	Y1	X1	X2	Y1	X1	X2	Y1	X1	X2	Y1	X1	X2	Y1	X1	X2	Y1
303 L1	—	—	—	—	—	—	—	—	—	—	—	—	460	571	258	552	692	310	596	736	310
303 L2	253	314	138	280	352	156	325	421	195	357	449	195	460	571	258	—	—	—	—	—	—
303 L3	253	314	138	280	352	156	325	421	195	357	449	195	460	571	258	—	—	—	—	—	—
303 L4	253	314	138	280	352	156	325	421	195	357	449	195	460	571	258	—	—	—	—	—	—

	R	R1	Kg	V	V1	Kg	V	V1	Kg	P71		P80		P90		P100		P112		P132	
										E	P	E	P	E	P	E	P	E	P	E	P
303 R2	143	140	85	137.5	24	6	158	38	7	65	160	84	200	84	200	94	250	94	250	114	300
303 R3	196	122	83	137.5	24	6	158	38	7	65	160	84	200	84	200	94	250	94	250	114	300
303 R4	249	122	87	137.5	24	6	158	38	7	65	160	84	200	84	200	94	250	94	250	114	300

	S1 + M1			S2 + M2S			S3 + M3S			S3 + M3L			S4 + M4		
	X1	X2	Y1	X1	X2	Y1	X1	X2	Y1	X1	X2	Y1	X1	X2	Y1
303 R2	—	—	—	328	400	156	373	469	195	405	497	195	508	619	258
303 R3	253	314	138	328	400	156	373	469	195	405	497	195	—	—	—
303 R4	253	314	138	328	400	156	373	469	195	405	497	195	—	—	—

303 VK

Il diagramma seguente consente di ricavare il carico radiale ammissibile R_{x2} quando questo è applicato alla distanza x dallo spallamento dell'albero lento del riduttore.
Le curve si riferiscono al valore risultante dal rapporto fra il carico assiale A_{n2} e il carico radiale R_{n2}, entrambi riferiti a n_2 = 10 min^{-1} e durata teorica di 10000 h.

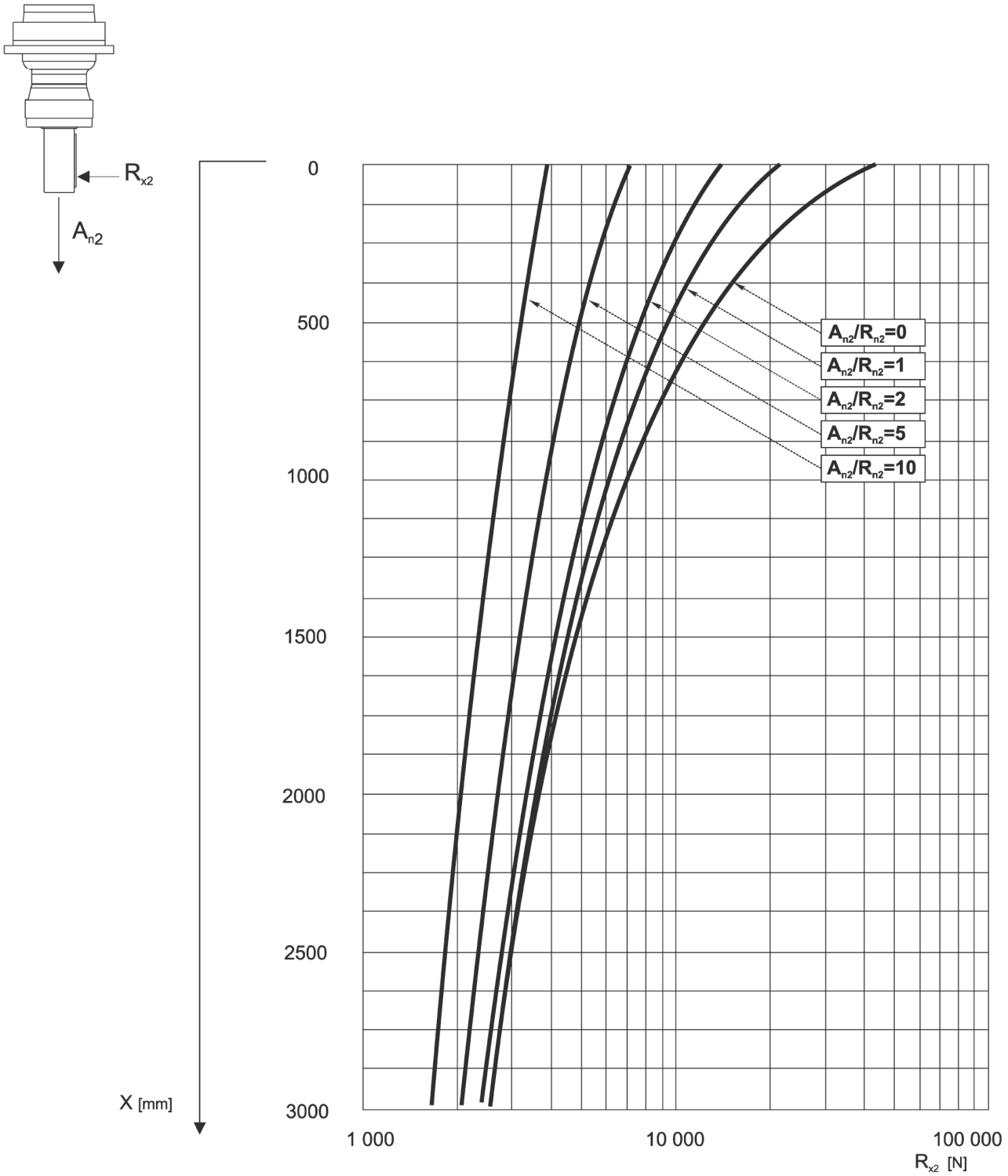

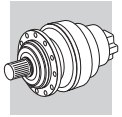

304 L

	Hydraulic motor										
	MG							471			Kg
cm³	050	080	100	125	160	200	250				
	M1							M2	M3	M4	
304 L1	—	—	—	—	203	210	219	135	77	1/4G	20
304 L2	162	167	171	175	181	188	—	113	60	1/4G	14

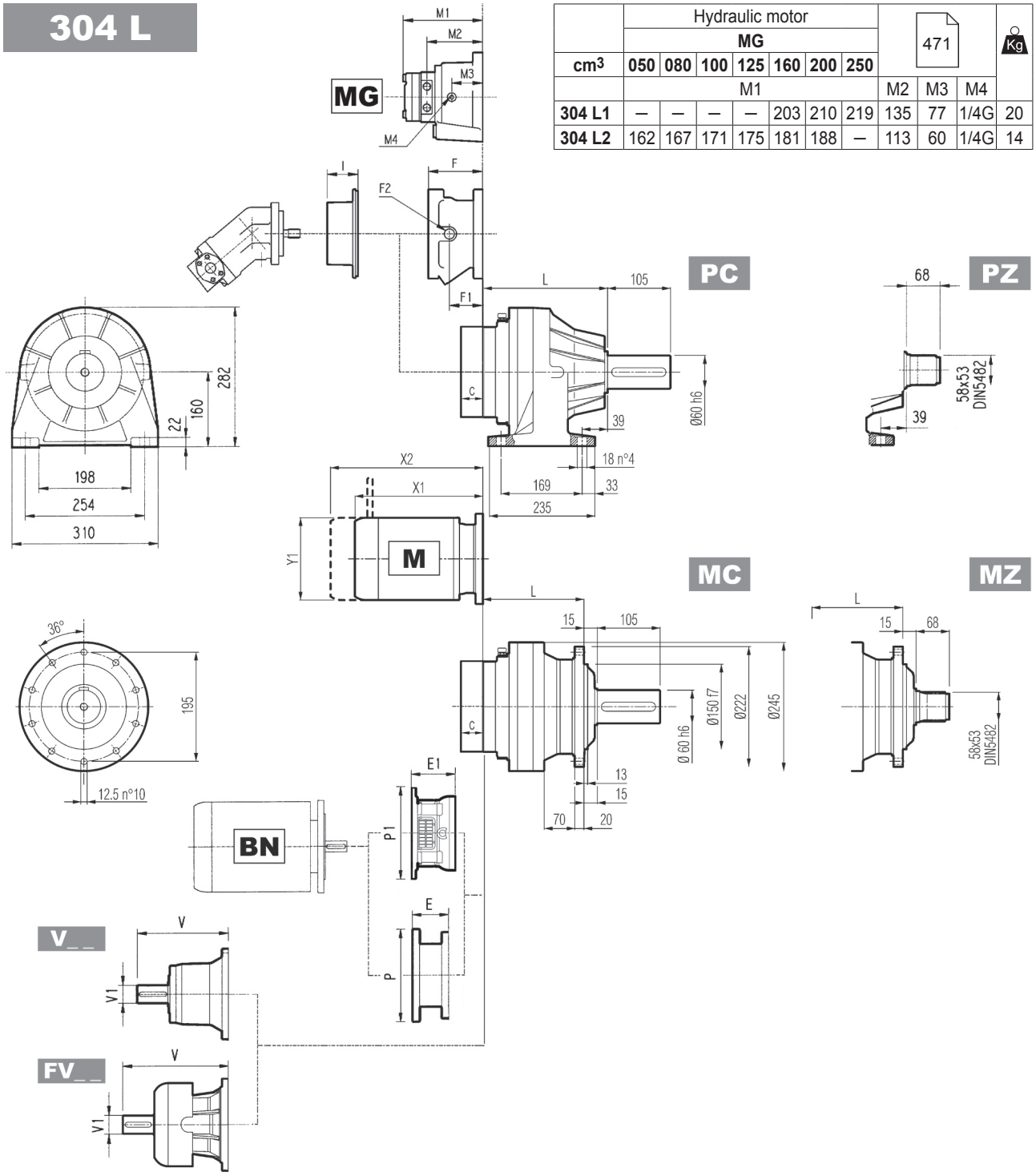

	L				Kg			
	MC - MZ	PC - PZ	HC - HZ	FP - FZ - FDK	MC - MZ	PC - PZ	HC - HZ	FP - FZ - FDK
304 L1	125	165	150	125	31	40	35	31
304 L2	190	230	215	190	38	47	42	38
304 L3	243	283	268	243	42	51	46	42
304 L4	296	336	321	296	46	55	50	46

	V	V1	Kg	V	V1	Kg	V	V1	Kg	V	V1	Kg	C	Input	I	F	F1	F2	Type	Input	Kg
304 L1	239	48	15	—	—	—	276	48	17	—	—	—	37	A		145	95	1/4 G	5	A	16
304 L2	137.5	24	6	158	38	7	—	—	—	—	—	—	37	A		105	65	1/4 G	4	A	10
304 L3	137.5	24	6	158	38	7	—	—	—	—	—	—	37	A		105	65	1/4 G	4	A	10
304 L4	137.5	24	6	158	38	7	—	—	—	—	—	—	37	A	461	105	65	1/4 G	4	A	10

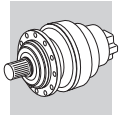

304 L

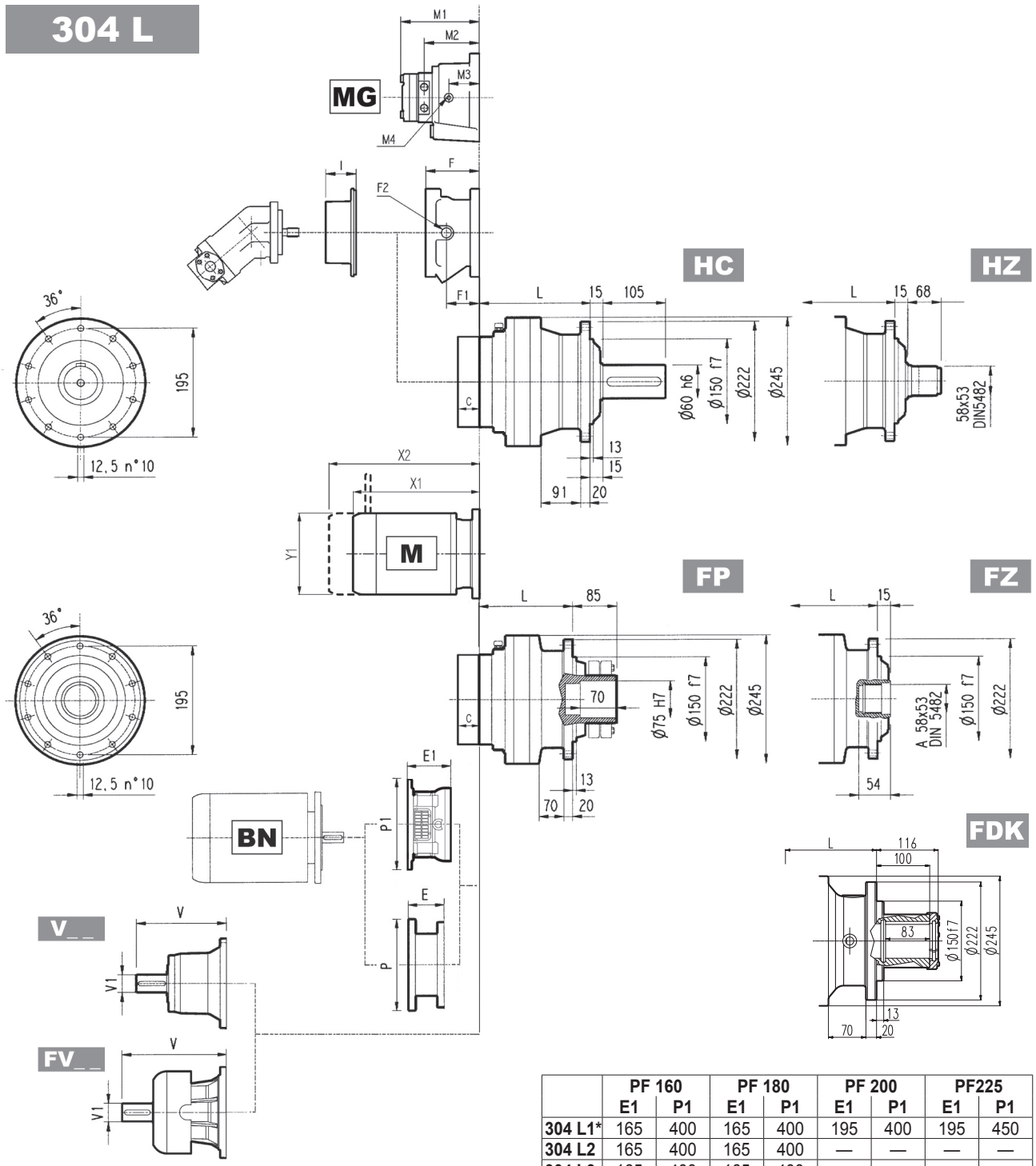

	PF 160		PF 180		PF 200		PF225	
	E1	P1	E1	P1	E1	P1	E1	P1
304 L1*	165	400	165	400	195	400	195	450
304 L2	165	400	165	400	—	—	—	—
304 L3	165	400	165	400	—	—	—	—

FP | M_{2max} = 7300 Nm

(*) per versioni PC-PZ contattare il Servizio Tecnico Bonfiglioli
NOTA: Per esecuzione R contattare il Servizio Tecnico Bonfiglioli

	P71		P80		P90		P100		P112		P132		P160		P180		P200	
	E	P	E	P	E	P	E	P	E	P	E	P	E	P	E	P	E	P
304 L1	—	—	—	—	—	—	—	—	—	—	114	300	144	350	144	350	174	400
304 L2	65	160	84	200	84	200	94	250	94	250	114	300	144	350	—	—	—	—
304 L3	65	160	84	200	84	200	94	250	94	250	114	300	144	350	—	—	—	—
304 L4	65	160	84	200	84	200	94	250	94	250	114	300	144	350	—	—	—	—

	S1 + M1			S2 + M2S			S3 + M3S			S3 + M3L			S4 + M4			S5 + M5S			S5 + M5L		
	X1	X2	Y1	X1	X2	Y1	X1	X2	Y1	X1	X2	Y1	X1	X2	Y1	X1	X2	Y1	X1	X2	Y1
304 L1	—	—	—	—	—	—	—	—	—	—	—	—	460	571	258	552	692	310	596	736	310
304 L2	253	314	138	280	352	156	325	421	195	357	449	195	460	571	258	—	—	—	—	—	—
304 L3	253	314	138	280	352	156	325	421	195	357	449	195	460	571	258	—	—	—	—	—	—
304 L4	253	314	138	280	352	156	325	421	195	357	449	195	460	571	258	—	—	—	—	—	—

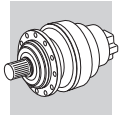

304 R

	Hydraulic motor										
	MG							471			Kg
cm³	050	080	100	125	160	200	250				
	M1							M2	M3	M4	
304 R2	162	167	171	175	181	188	—	113	60	1/4G	14

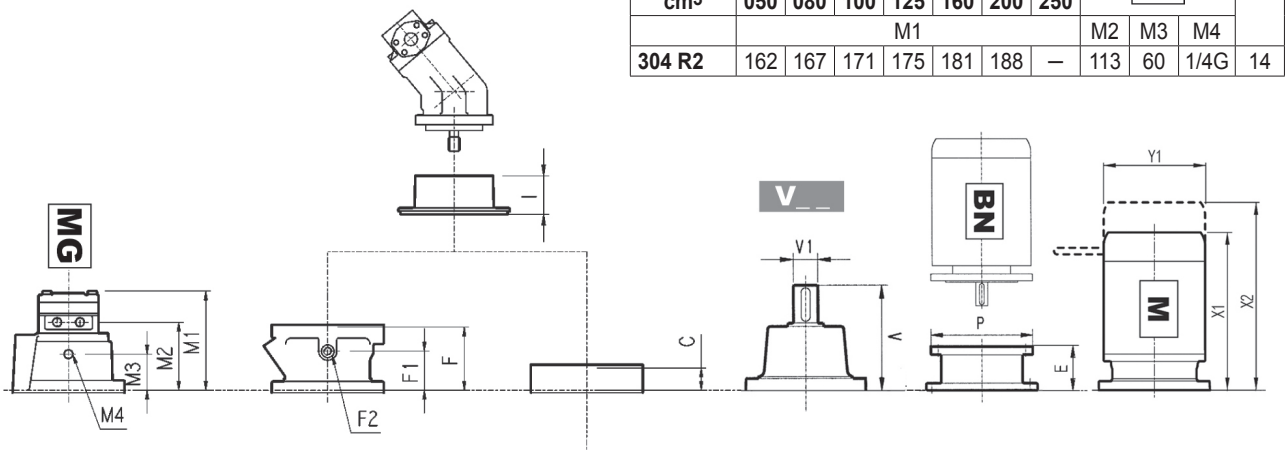

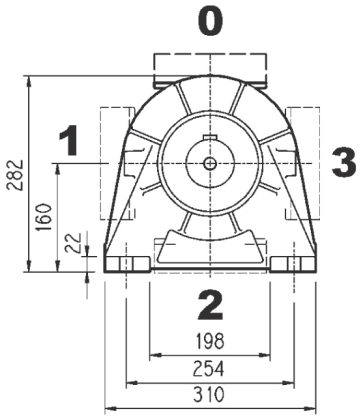

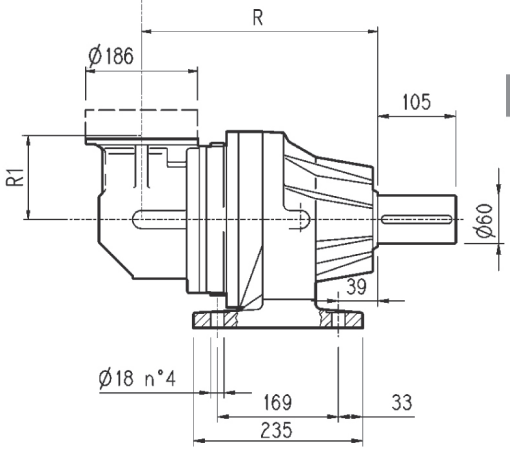

PC

PZ

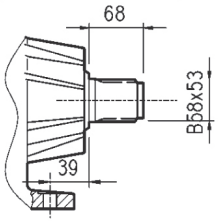

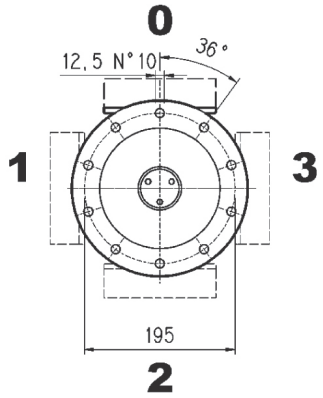

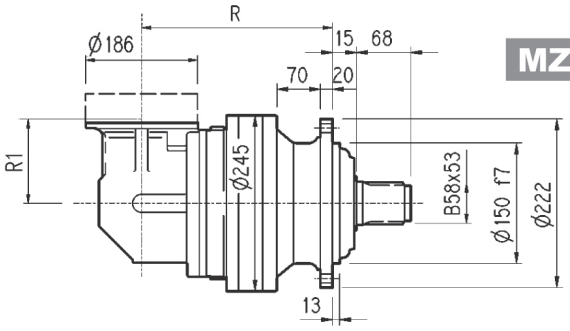

MZ

MC

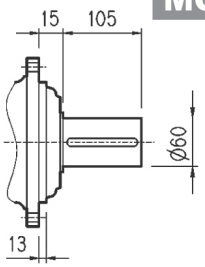

	R				R1	Kg			
	MC - MZ	PC - PZ	HC - HZ	FP - FZ - FDK		MC - MZ	PC - PZ	HC - HZ	FP - FZ - FDK
304 R2	217	257	242	217	140	51	60	55	51
304 R3	282	322	307	282	122	52	61	56	52
304 R4	335	375	360	335	122	56	65	60	56

	V	V1	Kg	V	V1	Kg	C	Input	I	F	F1	F2	Type	Input	Kg
304 R2	137.5	24	6	158	38	7	37	A		105	65	1/4 G	4	A	10
304 R3	137.5	24	6	158	38	7	37	A		105	65	1/4 G	4	A	10
304 R4	137.5	24	6	158	38	7	37	A	461	105	65	1/4 G	4	A	10

304 R

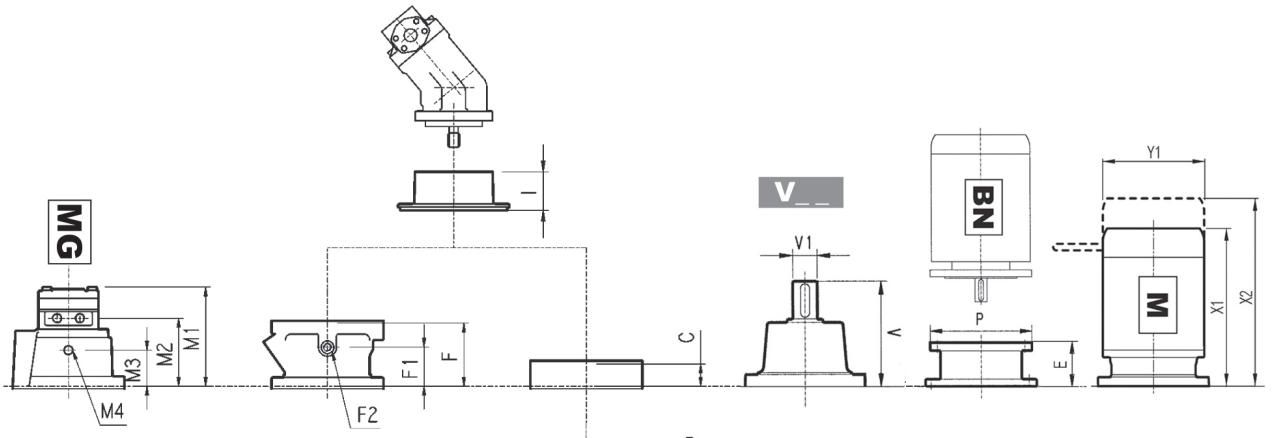

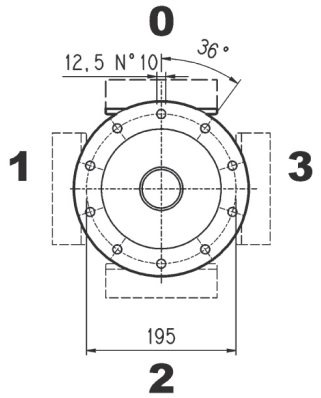

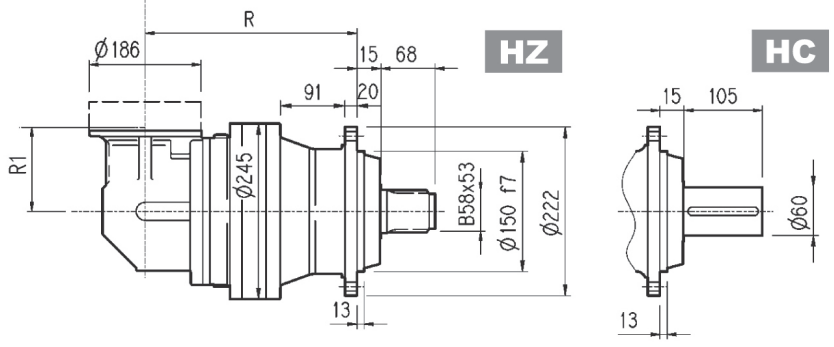

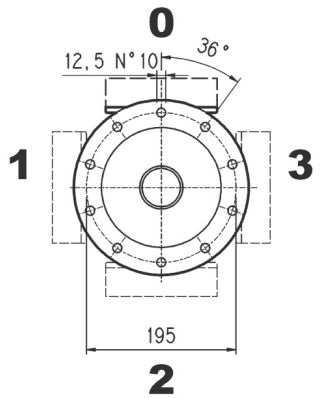

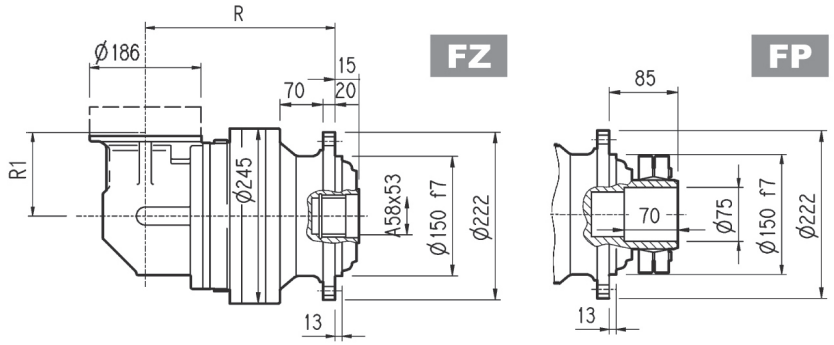

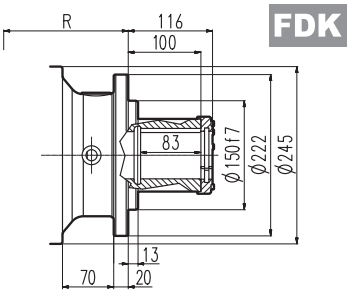

FP | M_{2max} = 7300 Nm

	P71		P80		P90		P100		P112		P132	
	E	P	E	P	E	P	E	P	E	P	E	P
304 R2	65	160	84	200	84	200	94	250	94	250	114	300
304 R3	65	160	84	200	84	200	94	250	94	250	114	300
304 R4	65	160	84	200	84	200	94	250	94	250	114	300

	S1 + M1			S2 + M2S			S3 + M3S			S3 + M3L			S4 + M4		
	X1	X2	Y1	X1	X2	Y1	X1	X2	Y1	X1	X2	Y1	X1	X2	Y1
304 R2	-	-	-	328	400	156	373	469	195	405	497	195	508	619	258
304 R3	253	314	138	328	400	156	373	469	195	405	497	195	—	—	—
304 R4	253	314	138	328	400	156	373	469	195	405	497	195	—	—	—

3/V 04 L3

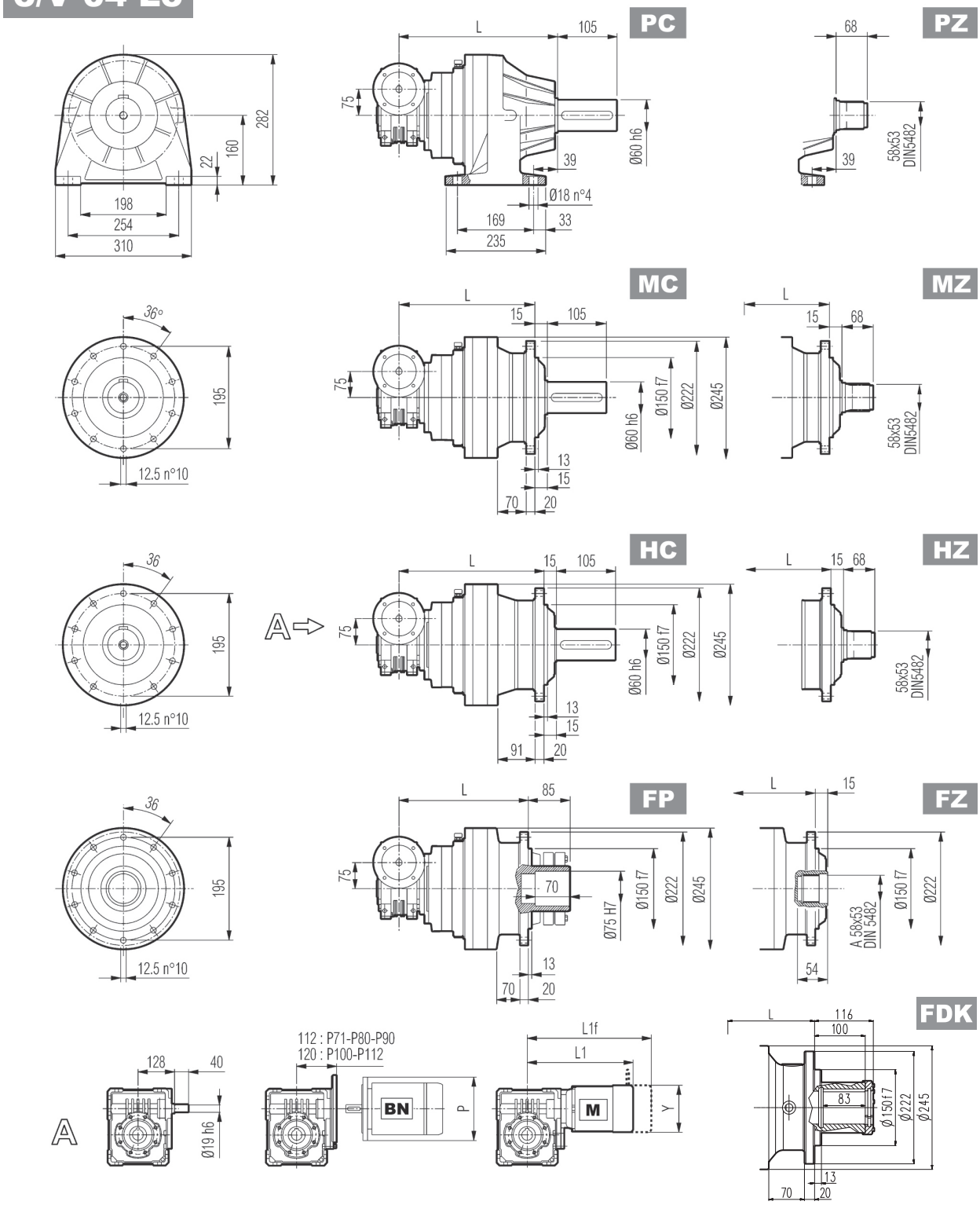

FP	M_{2max} = 7300 Nm

	L				Kg				P71	P80	P90	P100	P112
	MC - MZ	PC - PZ	HC - HZ	FP - FZ - FDK	MC - MZ	PC - PZ	HC - HZ	FP - FZ - FDK	P	P	P	P	P
3/V 04 L3	305	345	330	305	47	56	51	47	160	200	200	250	250

	S1 + M1			S2 + M2S			S3 + M3S			S3 + M3L		
	L1	L1f	Y	L1	L1f	Y	L1	L1f	Y	L1	L1f	Y
3/V 04 L3	308	369	138	333	409	156	376	472	193	408	499	193

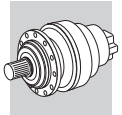

3/A 04 L2

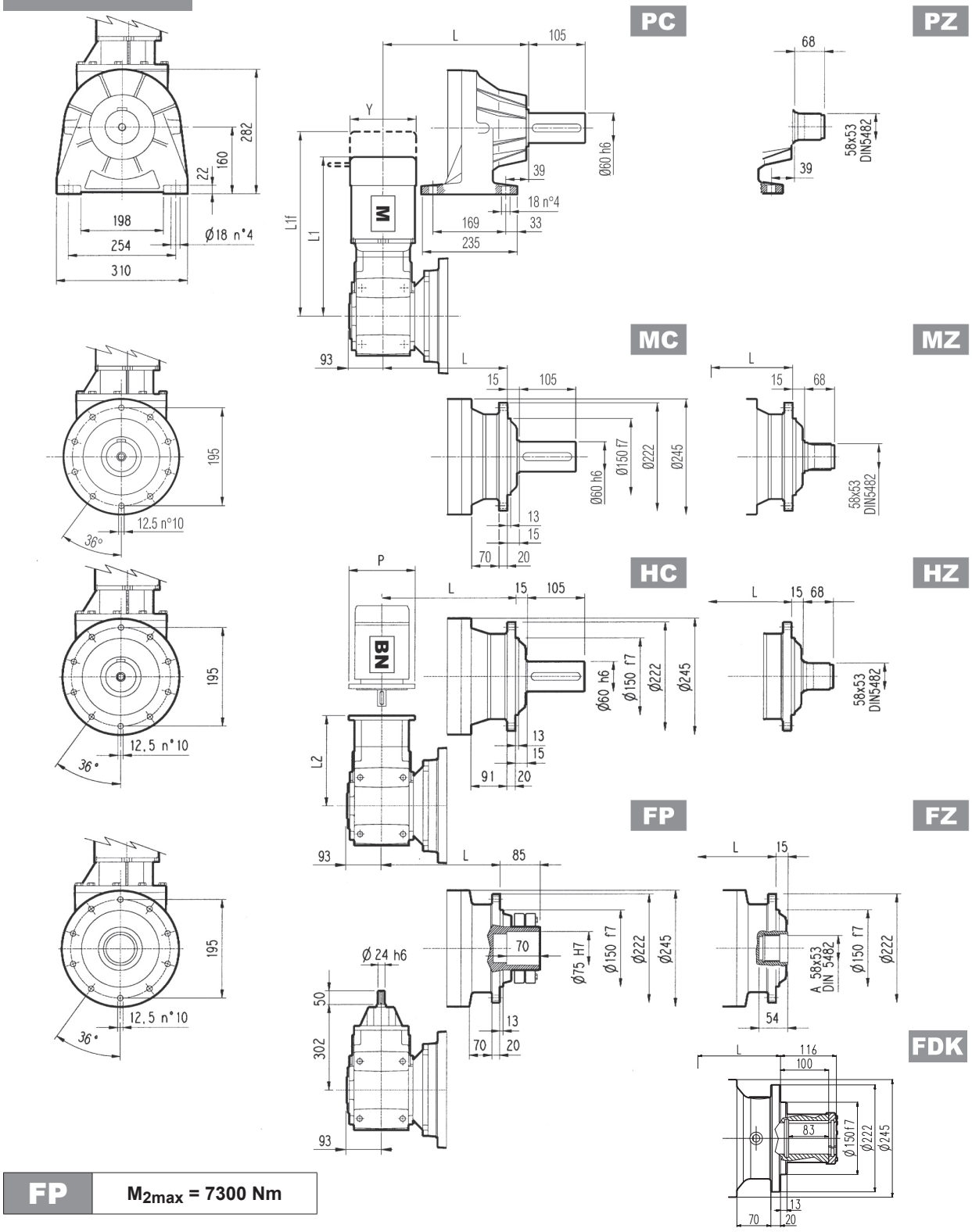

FP	M_{2max} = 7300 Nm

	L				Kg			
	MC - MZ	PC - PZ	HC - HZ	FP - FZ - FDK	MC - MZ	PC - PZ	HC - HZ	FP - FZ - FDK
3/A 04 L2	258	298	283	258	80	95	90	80

	P63		P71		P80		P90		P100		P112		P132	
	L2	P	L2	P	L2	P	L2	P	L2	P	L2	P	L2	P
3/A 04 L2	263	140	263	160	282.5	200	282.5	200	292.5	250	292.5	250	329	457

	S1 + M1			S2 + M2S			S3 + M3SA			S3 + M3LA			S4 + M4		
	L1	L1f	Y	L1	L1f	Y	L1	L1f	Y	L1	L1f	Y	L1	L1f	Y
3/A 04 L2	418	439	138	447	517	156	490	487	195	522	538	195	630	738	258

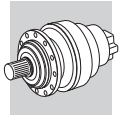

304 L | 304 R | 3/V 04 L3 | 3/A 04 L2

MC HC

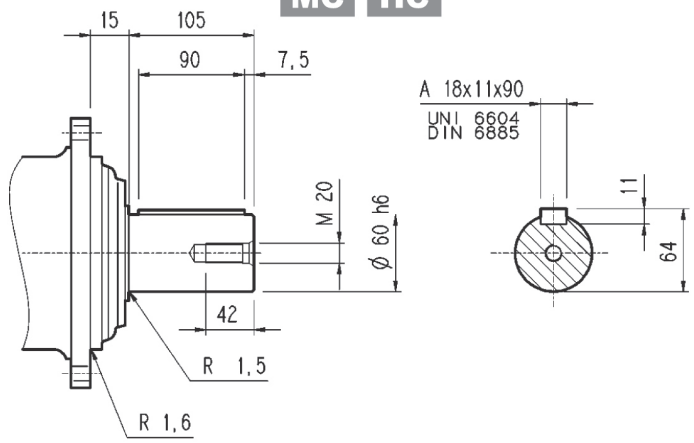

PC

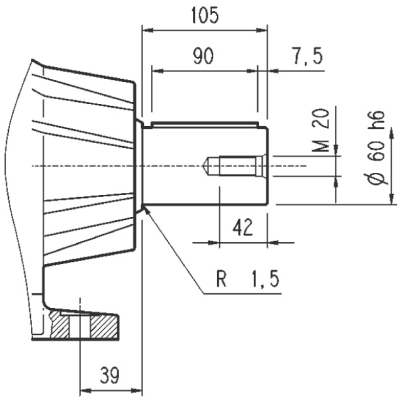

MZ HZ

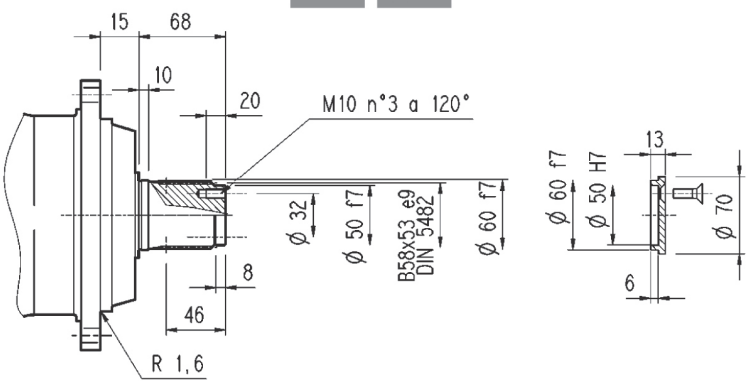

FZ

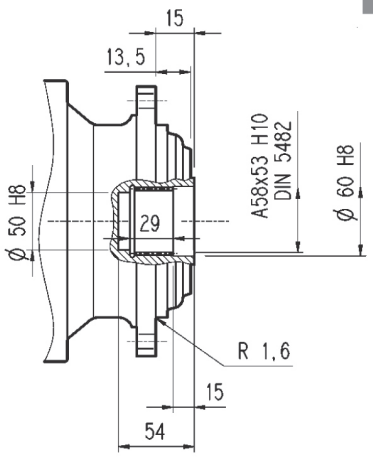

FP

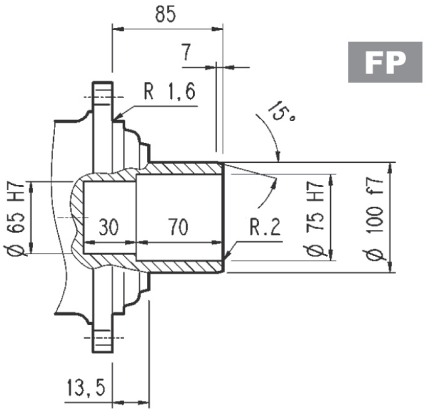

FDK

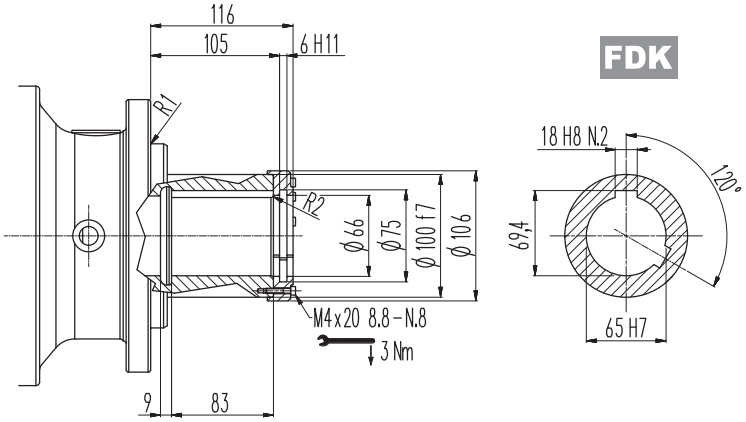

FP	M_{2max} = 7300 Nm

Flangia

W0A

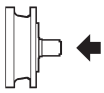

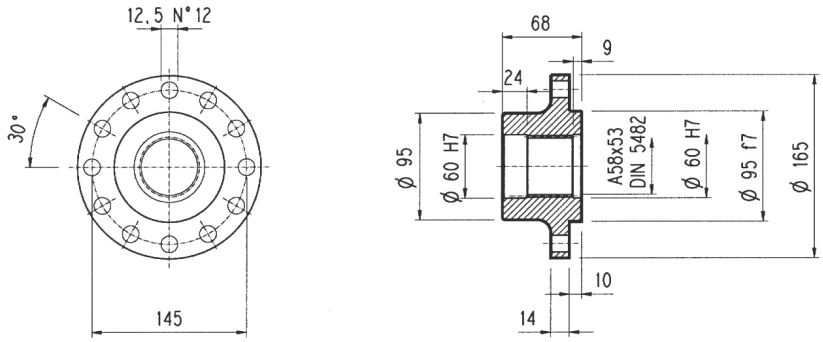

Materiale: Acciaio C40

Pignoni

P...

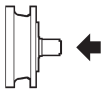

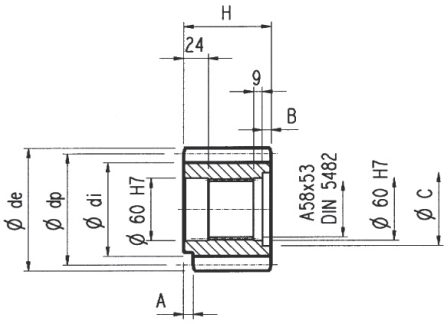

α = 20°

	m	z	x	dp	di	de	H	A	B	C	Materiale
PCL1	5	19	—	95	82	104	77	12	9	72	Acciaio 39NiCrMo3 Bonificato
PCL2	5	19	—	95	82	104	68	—	—	—	
PCM	5	20	—	100	87.5	110	68	18	—	—	Acciaio 18NiCrMo5 Cementato e temprato
PCP	5	22	—	110	97.5	120	68	18	—	—	
PDE	6	14	0.500	84	75	99.6	68	—	—	—	Acciaio 39NiCrMo3 Bonificato
PDI	6	18	0.500	108	99	123.6	68	—	—	—	
PDM	6	20	0.833	120	115	140	68	—	—	—	
PFD	8	13	0.675	104	95	127.6	68	—	—	—	Acciaio 18NiCrMo5 Cementato e temprato
PFE1	8	14	—	112	92	126	68	—	—	—	
PFE2	8	14	—	112	92	126	80	—	12	72	
PFF	8	15	—	120	100	136	68	—	—	—	Acciaio 39NiCrMo3 Bonificato
PFP	8	22	—	176	156	190	77	12	10	71	
PHG	10	16	0.500	160	145	188	75	—	7	72	

Manicotti lisci

M0A

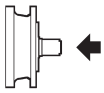

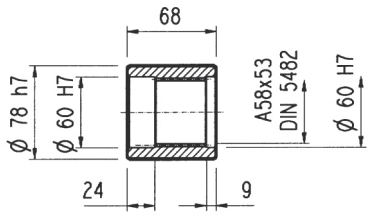

Materiale: Acciaio 16CrNi4

Barre scanalate

B0A

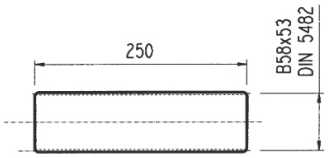

Materiale: Acciaio 18NiCrMo5 UNI 5331
da cementare e temprare 50-55 HRC

Giunto ad attrito

G0A

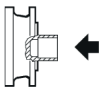

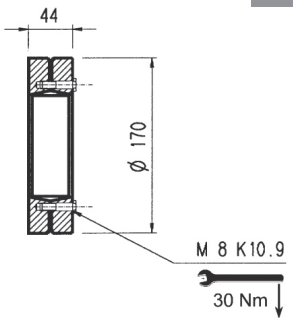

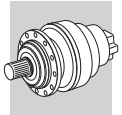

304 L 304 R

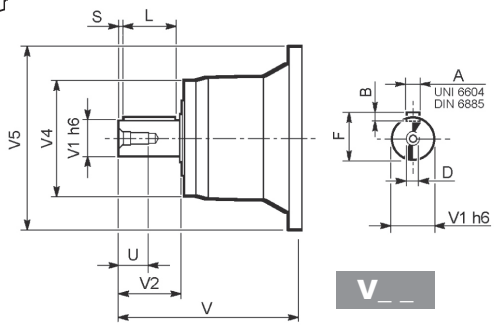

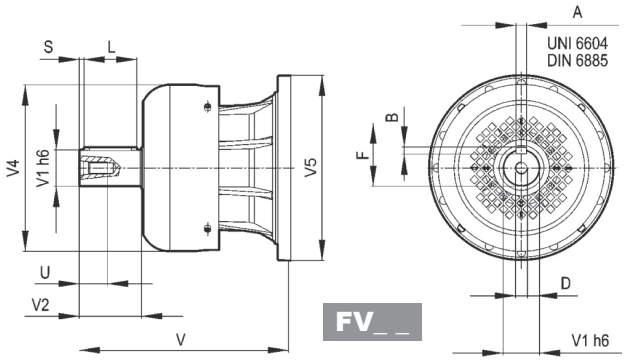

		V	V1	V2	V4	V5	A	B	F	L	S	D	U
304 L1	**V05B**	239	48	82	155	245	14	9	51.5	70	6	M16	36
	FV05B	276	48	82	219.5	244	14	9	51.5	70	6	M16	36
304 L2	**V01A**	137.5	24	36	120	186	8	7	27	30	3	M8	19
	V01B	158	38	58	120	186	10	8	41	50	4	M12	28
304 L3	**V01A**	137.5	24	36	120	186	8	7	27	30	3	M8	19
	V01B	158	38	58	120	186	10	8	41	50	4	M12	28
304 L4	**V01A**	137.5	24	36	120	186	8	7	27	30	3	M8	19
	V01B	158	38	58	120	186	10	8	41	50	4	M12	28
304 R2-R3-R4	**V01A**	137.5	24	36	120	186	8	7	27	30	3	M8	19
	V01B	158	38	58	120	186	10	8	41	50	4	M12	28

304 L 304 R

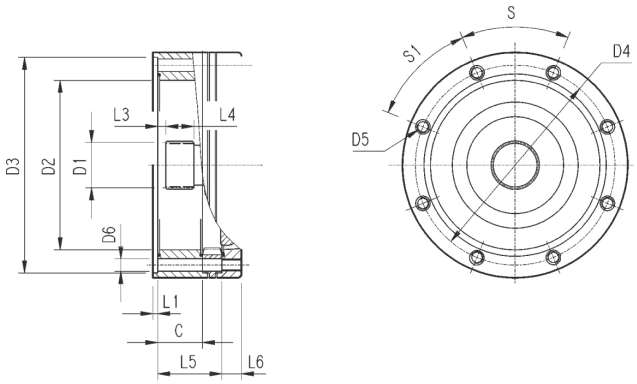

		C	D1	D2	D3	D4	D5	D6	L1	L2	L3	L4	L5	L6	S	S1	Input
304 L1	**V9AA**	37	40x36 DIN5482	140	178 H7	165	M10 n°8	11	4	—	9	18	—	18	45°	45°	A
304 L2	**V9AA**	37	40x36 DIN5482	140	178 H7	165	M10 n°8	11	4	—	9	18	65	18	45°	45°	A
304 L3	**V9AA**	37	40x36 DIN5482	140	178 H7	165	M10 n°8	11	4	—	9	18	118	18	45°	45°	A
304 L4	**V9AA**	37	40x36 DIN5482	140	178 H7	165	M10 n°8	11	4	—	9	18	171	18	45°	45°	A
304 R2-R3-R4	**V9AA**	37	40x36 DIN5482	140	178 H7	165	M10 n°8	11	4	—	9	18	37	18	45°	45°	A

3/V 04 L3

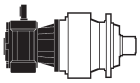

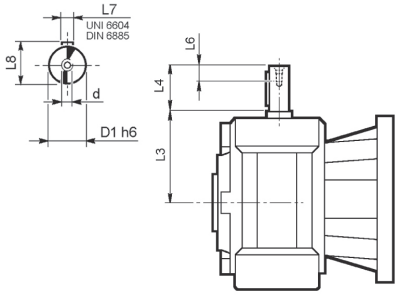

	D1 h6	L3	L4	L6	L7	L8	d
3/V 04 L3_HS	19	128	40	16	6	21.5	M6

3/A 04 L2

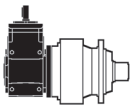

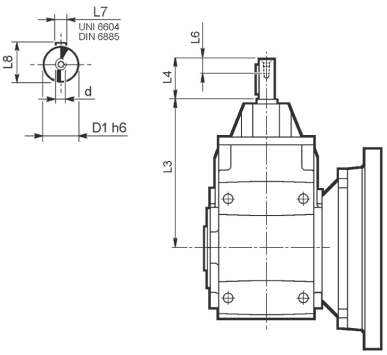

	D1 h6	L3	L4	L6	L7	L8	d
3/A 04 L2_HS	24	302	50	19	8	27	M8

Carichi radiali ed assiali ammissibili sull'albero lento per un valore di $Fh_2 : n_2 \cdot h = 100000$

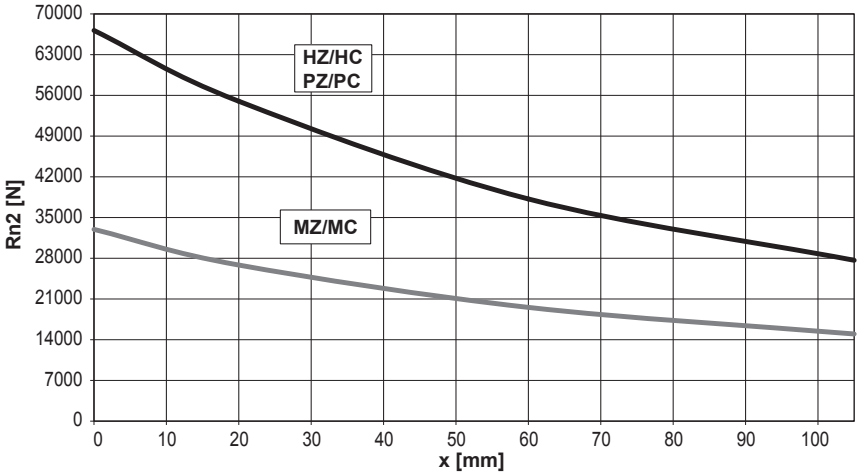

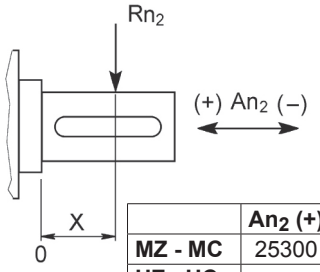

	An_2 (+)	An_2 (-)
MZ - MC	25300	20240
HZ - HC PZ - PC	27500	22000

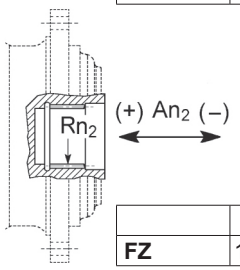

	Rn_2	An_2 (+/-)
FZ	11140	11604

Fattore fh_2 correttivo per carichi sugli alberi	$Fh_2 = n_2 \cdot h$		10000	25000	50000	100000	500000	1000000
	fh_2	FZ	**2.15**	**1.59**	**1.26**	**1.00**	**0.58**	**0.46**
		MZ - MC	**2.15**	**1.59**	**1.26**	**1.00**	**0.58**	**0.46**
		HZ - HC - PZ - PC	**1.48**	**1.48**	**1.23**	**1.00**	**0.62**	**0.50**

Carichi radiali ammissibili sull'albero veloce per un valore di $Fh_1 : n_1 \cdot h = 250000$

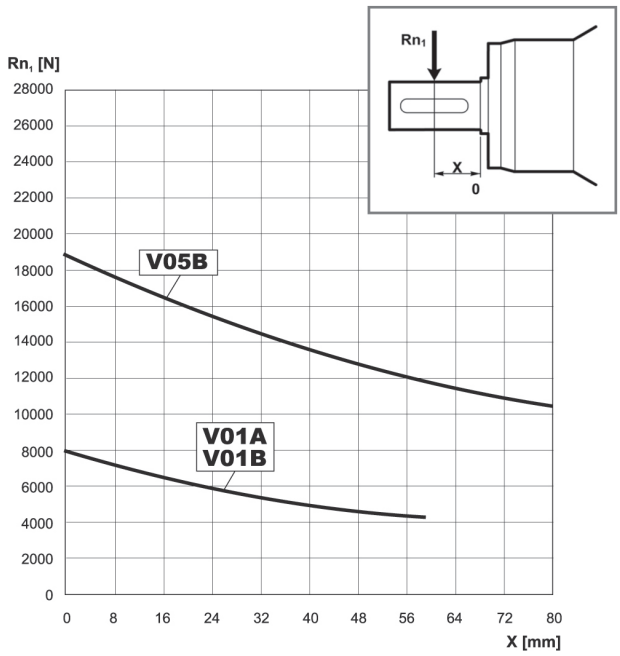

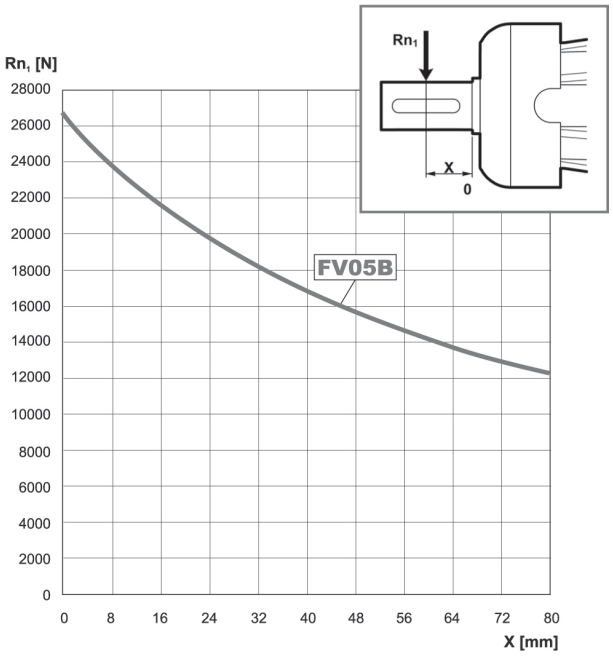

Fattore fh_1 correttivo per carichi sugli alberi	$Fh_1 = n_1 \cdot h$	250000	500000	1000000	2000000	5000000	10000000
	fh_1	**1**	**0.79**	**0.63**	**0.50**	**0.37**	**0.29**

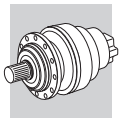

304 VK

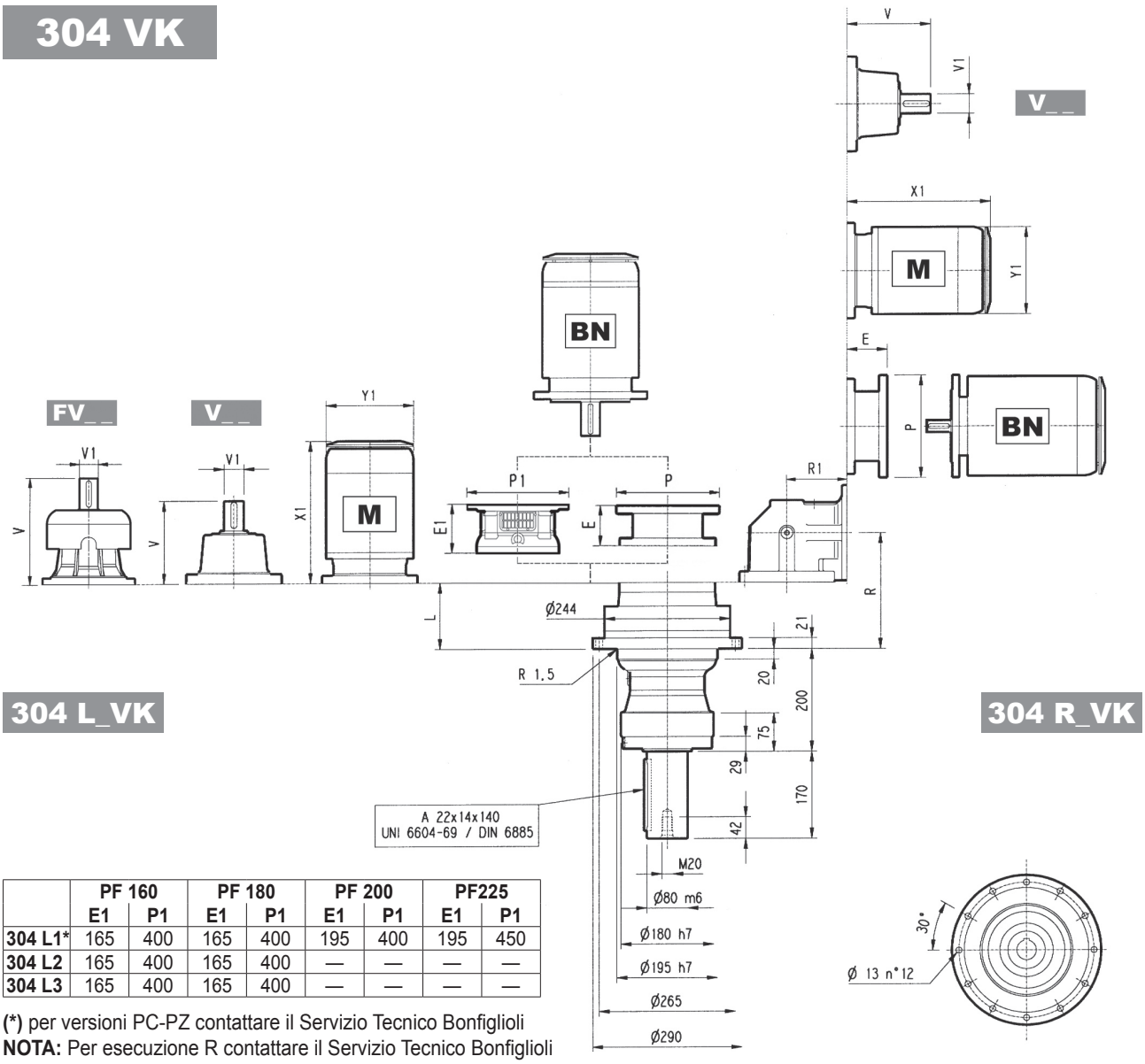

304 L_VK

304 R_VK

	PF 160		PF 180		PF 200		PF225	
	E1	P1	E1	P1	E1	P1	E1	P1
304 L1*	165	400	165	400	195	400	195	450
304 L2	165	400	165	400	—	—	—	—
304 L3	165	400	165	400	—	—	—	—

(*) per versioni PC-PZ contattare il Servizio Tecnico Bonfiglioli
NOTA: Per esecuzione R contattare il Servizio Tecnico Bonfiglioli

	L	Kg	V	V1	Kg	V	V1	Kg	V	V1	Kg	V	V1	Kg	P71		P80		P90		P100		P112		P132		P160		P180		P200	
															E	P	E	P	E	P	E	P	E	P	E	P	E	P	E	P	E	P
304 L1	51	65	239	48	15	—	—	—	276	48	17	—	—	—	—	—	—	—	—	—	—	—	—	—	114	300	144	350	144	350	174	400
304 L2	116	73	137.5	24	6	158	38	7	—	—	—	—	—	—	65	160	84	200	84	200	94	250	94	250	114	300	144	350	—	—	—	—
304 L3	169	76	137.5	24	6	158	38	7	—	—	—	—	—	—	65	160	84	200	84	200	94	250	94	250	114	300	144	350	—	—	—	—
304 L4	222	80	137.5	24	6	158	38	7	—	—	—	—	—	—	65	160	84	200	84	200	94	250	94	250	114	300	144	350	—	—	—	—

	S1 + M1			S2 + M2S			S3 + M3S			S3 + M3L			S4 + M4			S5 + M5S			S5 + M5L		
	X1	X2	Y1	X1	X2	Y1	X1	X2	Y1	X1	X2	Y1	X1	X2	Y1	X1	X2	Y1	X1	X2	Y1
304 L1	—	—	—	—	—	—	—	—	—	—	—	—	460	571	258	552	692	310	596	736	310
304 L2	253	314	138	280	352	156	325	421	195	357	449	195	460	571	258	—	—	—	—	—	—
304 L3	253	314	138	280	352	156	325	421	195	357	449	195	460	571	258	—	—	—	—	—	—
304 L4	253	314	138	280	352	156	325	421	195	357	449	195	460	571	258	—	—	—	—	—	—

	R	R1	Kg	V	V1	Kg	V	V1	Kg	P71		P80		P90		P100		P112		P132	
										E	P	E	P	E	P	E	P	E	P	E	P
304 R2	143	140	85	137.5	24	6	158	38	7	65	160	84	200	84	200	94	250	94	250	114	300
304 R3	208	122	86	137.5	24	6	158	38	7	65	160	84	200	84	200	94	250	94	250	114	300
304 R4	261	122	90	137.5	24	6	158	38	7	65	160	84	200	84	200	94	250	94	250	114	300

	S1 + M1			S2 + M2S			S3 + M3S			S3 + M3L			S4 + M4		
	X1	X2	Y1	X1	X2	Y1	X1	X2	Y1	X1	X2	Y1	X1	X2	Y1
304 R2	—	—	—	328	400	156	373	469	195	405	497	195	508	619	258
304 R3	253	314	138	328	400	156	373	469	195	405	497	195	—	—	—
304 R4	253	314	138	328	400	156	373	469	195	405	497	195	—	—	—

304 VK

Il diagramma seguente consente di ricavare il carico radiale ammissibile R_{x2} quando questo è applicato alla distanza x dallo spallamento dell'albero lento del riduttore.
Le curve si riferiscono al valore risultante dal rapporto fra il carico assiale A_{n2} e il carico radiale R_{n2}, entrambi riferiti a n_2 = 10 min^{-1} e durata teorica di 10000 h.

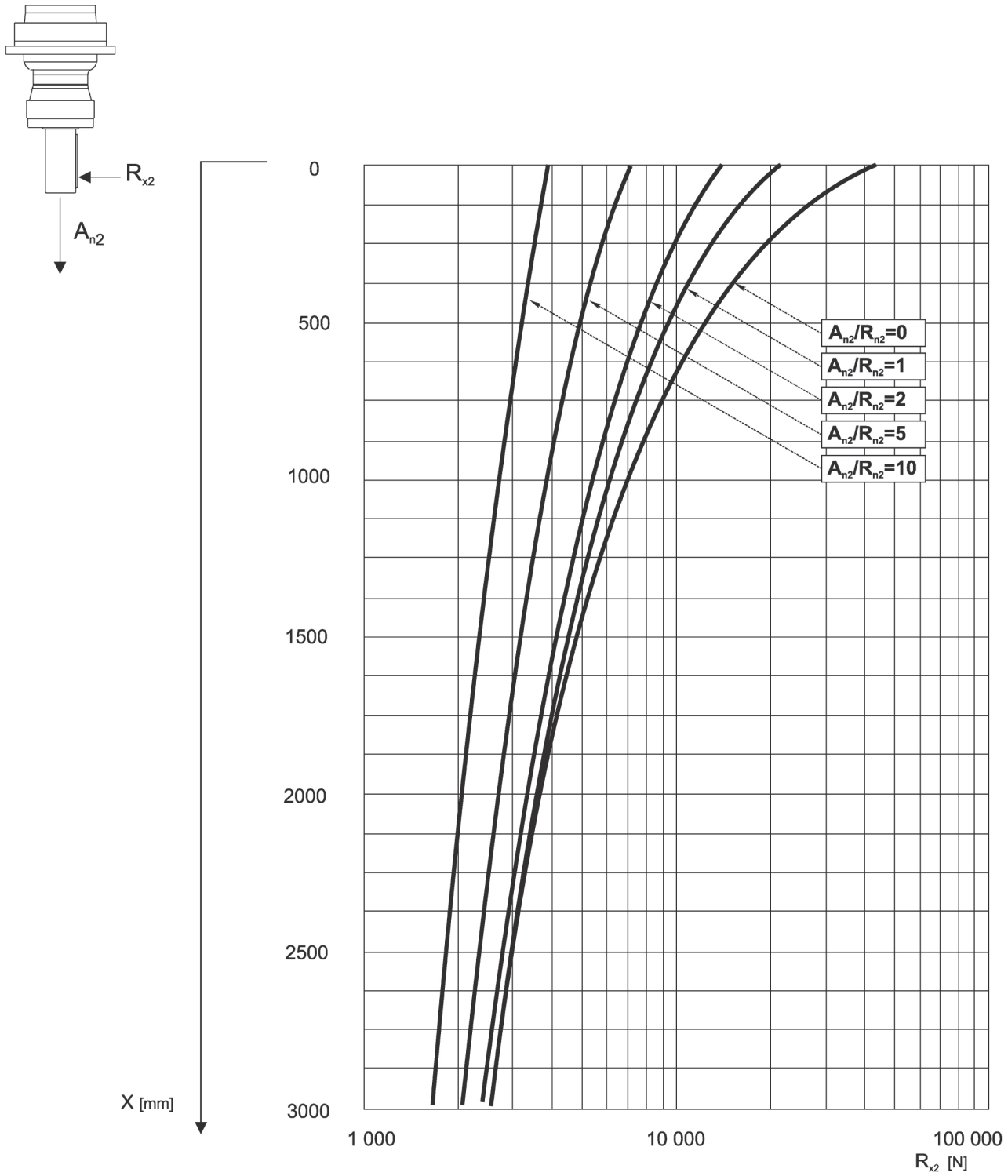

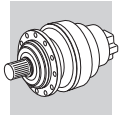

305 L

	Hydraulic motor										
	MG							471			Kg
cm³	050	080	100	125	160	200	250				
	M1							M2	M3	M4	
305 L1	—	—	—	—	203	210	219	135	77	1/4G	20
305 L2	162	167	171	175	181	188	—	113	60	1/4G	14

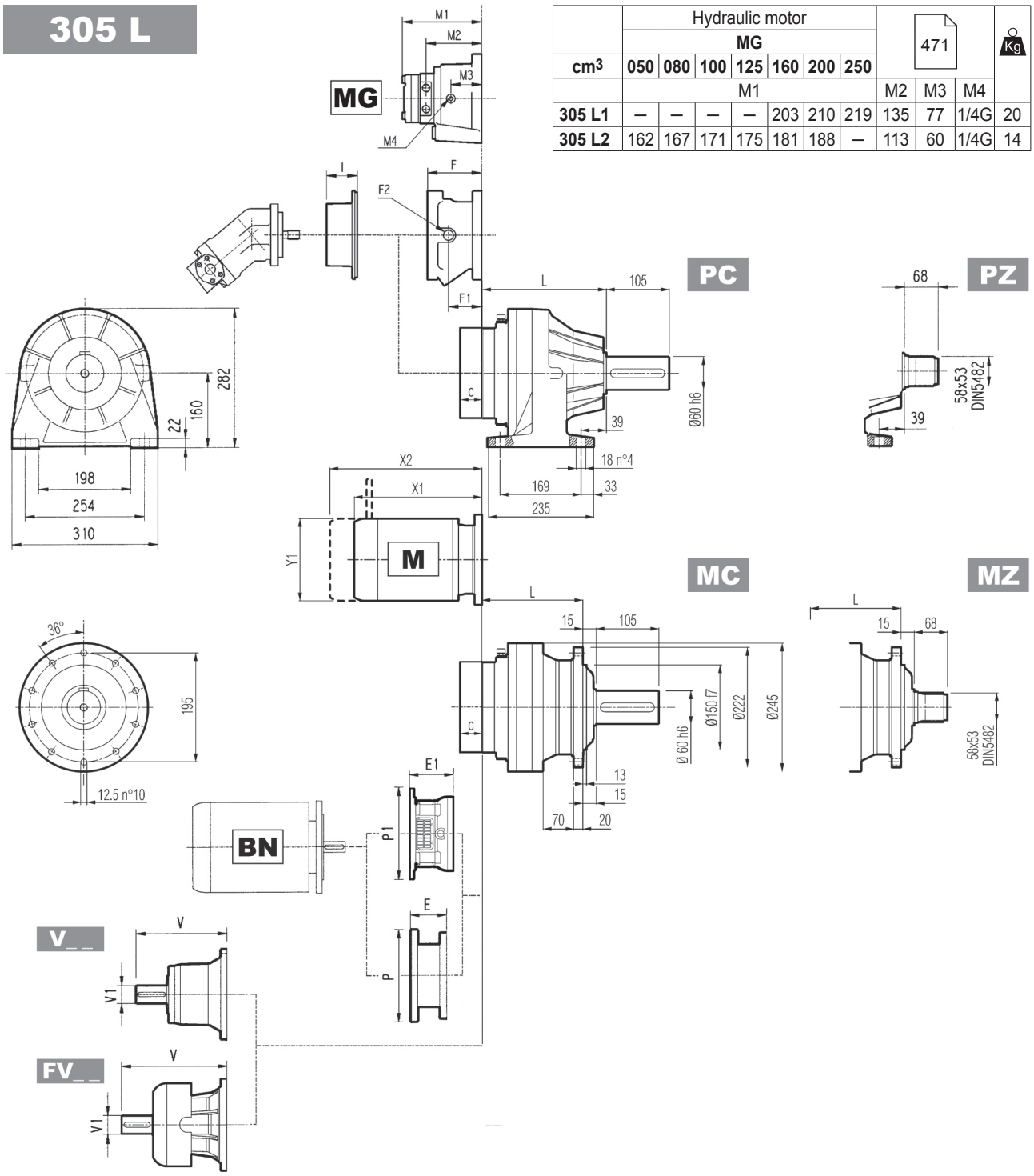

	L				Kg			
	MC - MZ	PC - PZ	HC - HZ	FP - FZ - FDK	MC - MZ	PC - PZ	HC - HZ	FP - FZ - FDK
305 L1	143	183	168	143	36	45	40	36
305 L2	208	248	233	208	43	52	47	43
305 L3	261	301	286	261	47	56	51	47
305 L4	314	354	339	314	51	60	55	51

	V	V1	Kg	V	V1	Kg	V	V1	Kg	V	V1	Kg	C	Input	I	F	F1	F2	Type	Input	Kg
305 L1	239	48	15	—	—	—	276	48	17	—	—	—	37	A	461	145	95	1/4 G	5	A	16
305 L2	137.5	24	6	158	38	7	—	—	—	—	—	—	37	A		105	65	1/4 G	4	A	10
305 L3	137.5	24	6	158	38	7	—	—	—	—	—	—	37	A		105	65	1/4 G	4	A	10
305 L4	137.5	24	6	158	38	7	—	—	—	—	—	—	37	A		105	65	1/4 G	4	A	10

305 L

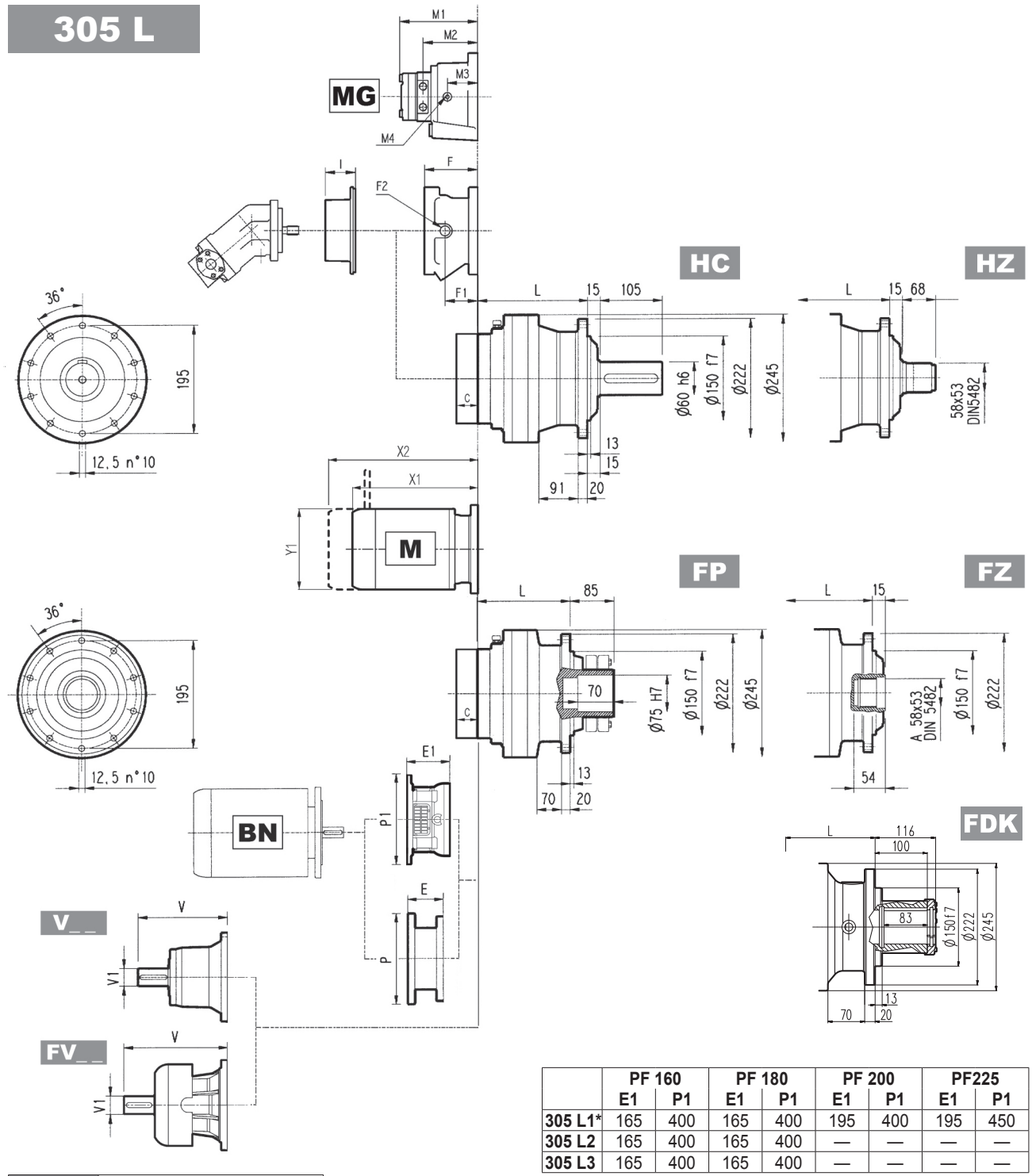

	PF 160		PF 180		PF 200		PF225	
	E1	P1	E1	P1	E1	P1	E1	P1
305 L1*	165	400	165	400	195	400	195	450
305 L2	165	400	165	400	—	—	—	—
305 L3	165	400	165	400	—	—	—	—

FP | **M_{2max} = 7500 Nm**

(*) per versioni PC-PZ contattare il Servizio Tecnico Bonfiglioli
NOTA: Per esecuzione R contattare il Servizio Tecnico Bonfiglioli

	P71		P80		P90		P100		P112		P132		P160		P180		P200	
	E	P	E	P	E	P	E	P	E	P	E	P	E	P	E	P	E	P
305 L1	—	—	—	—	—	—	—	—	—	—	114	300	144	350	144	350	174	400
305 L2	65	160	84	200	84	200	94	250	94	250	114	300	144	350	—	—	—	—
305 L3	65	160	84	200	84	200	94	250	94	250	114	300	144	350	—	—	—	—
305 L4	65	160	84	200	84	200	94	250	94	250	114	300	144	350	—	—	—	—

	S1 + M1			S2 + M2S			S3 + M3S			S3 + M3L			S4 + M4			S5 + M5S			S5 + M5L		
	X1	X2	Y1	X1	X2	Y1	X1	X2	Y1	X1	X2	Y1	X1	X2	Y1	X1	X2	Y1	X1	X2	Y1
305 L1	—	—	—	—	—	—	—	—	—	—	—	—	460	571	258	552	692	310	596	736	310
305 L2	—	—	—	280	352	156	325	421	195	357	449	195	460	571	258	—	—	—	—	—	—
305 L3	253	314	138	280	352	156	325	421	195	357	449	195	460	571	258	—	—	—	—	—	—
305 L4	253	314	138	280	352	156	325	421	195	357	449	195	460	571	258	—	—	—	—	—	—

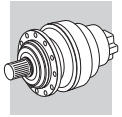

305 R

	Hydraulic motor							471			Kg
	MG										
cm³	050	080	100	125	160	200	250				
	M1							M2	M3	M4	
305 R2	162	167	171	175	181	188	—	113	60	1/4G	14

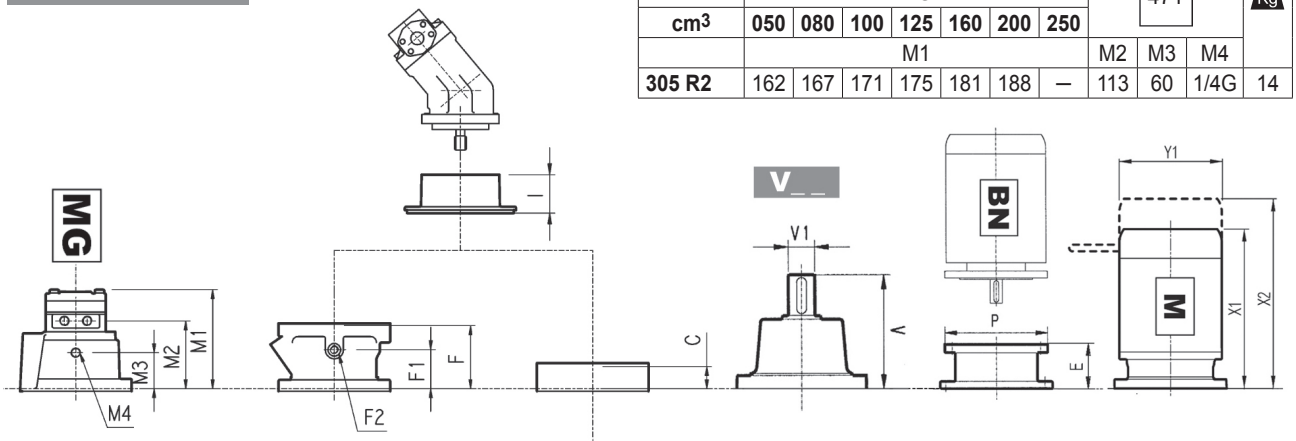

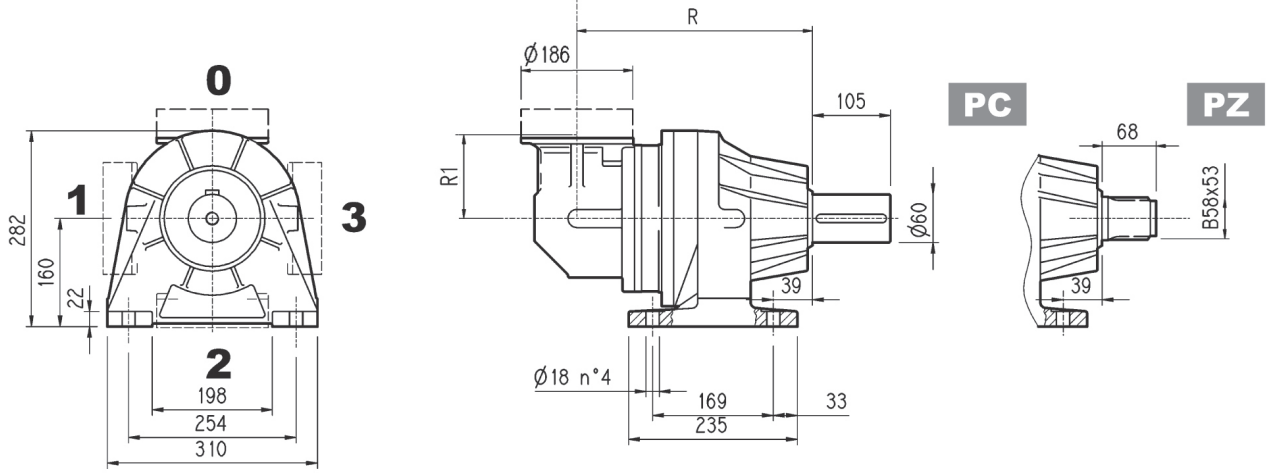

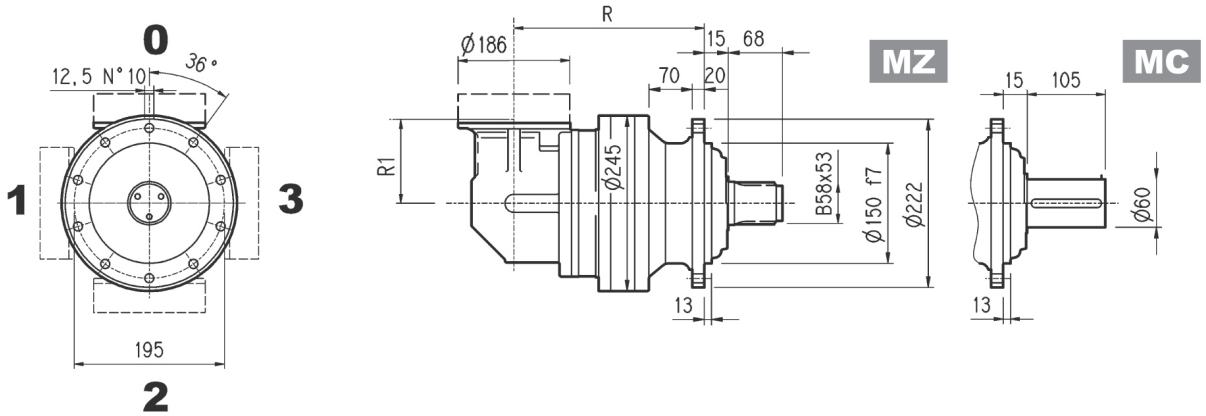

	R				R1	Kg			
	MC - MZ	PC - PZ	HC - HZ	FP - FZ - FDK		MC - MZ	PC - PZ	HC - HZ	FP - FZ - FDK
305 R2	235	375	260	235	140	56	65	60	56
305 R3	300	340	325	300	122	57	66	61	57
305 R4	353	393	378	353	122	61	70	65	61

	V	V1	Kg	V	V1	Kg	C	Input	I	F	F1	F2	Type	Input	Kg
305 R2	137.5	24	6	158	38	7	37	A		105	65	1/4 G	4	A	10
305 R3	137.5	24	6	158	38	7	37	A		105	65	1/4 G	4	A	10
305 R4	137.5	24	6	158	38	7	37	A	461	105	65	1/4 G	4	A	10

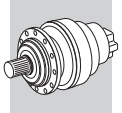

305 R

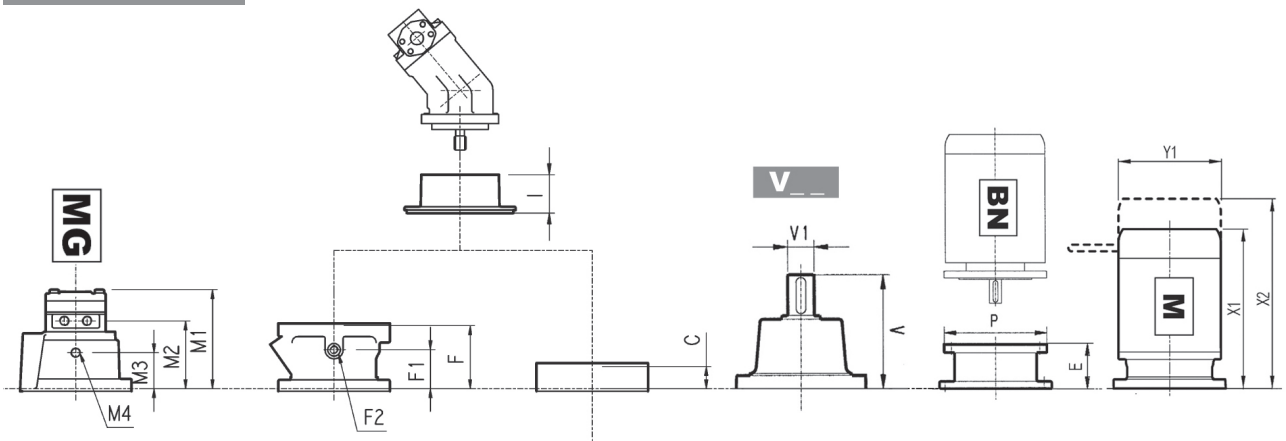

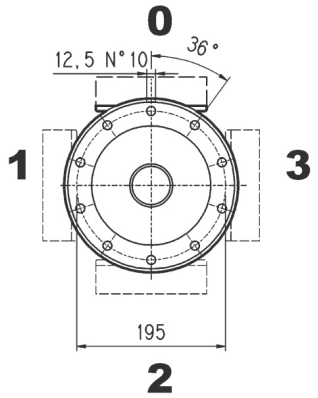

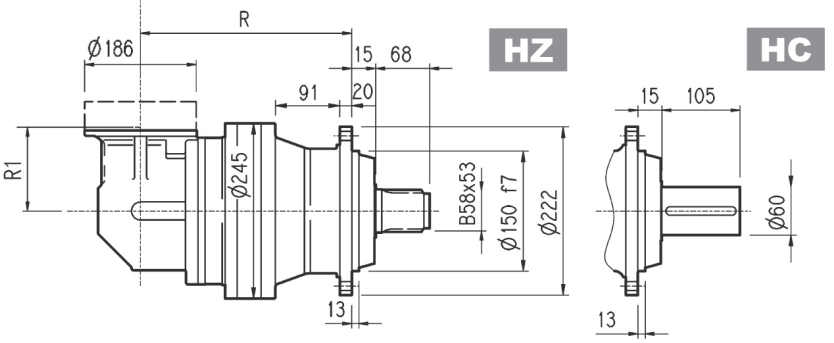

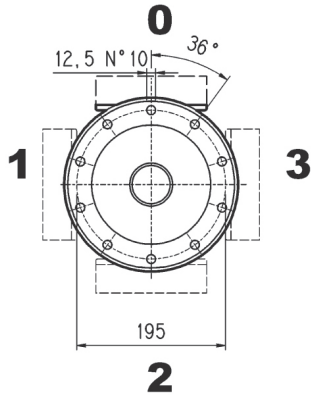

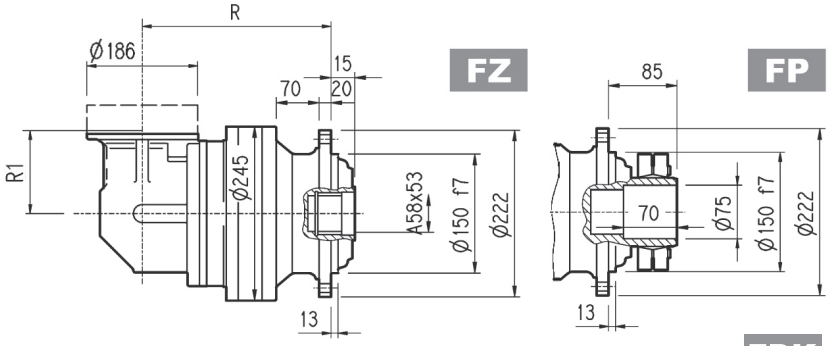

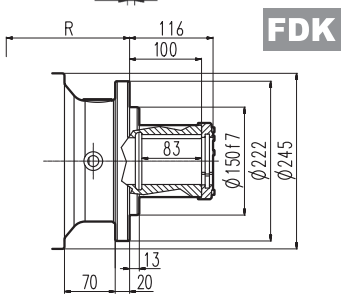

FP	M_{2max} = 7500 Nm

	P71		P80		P90		P100		P112		P132	
	E	P	E	P	E	P	E	P	E	P	E	P
305 R2	65	160	84	200	84	200	94	250	94	250	114	300
305 R3	65	160	84	200	84	200	94	250	94	250	114	300
305 R4	65	160	84	200	84	200	94	250	94	250	114	300

	S1 + M1			S2 + M2S			S3 + M3S			S3 + M3L			S4 + M4		
	X1	X2	Y1	X1	X2	Y1	X1	X2	Y1	X1	X2	Y1	X1	X2	Y1
305 R2	—	—	—	328	400	156	373	469	195	405	497	195	508	619	258
305 R3	253	314	138	328	400	156	373	469	195	405	497	195	508	619	258
305 R4	253	314	138	328	400	156	373	469	195	405	497	195	508	619	258

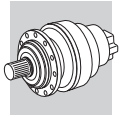

3/V 05 L3

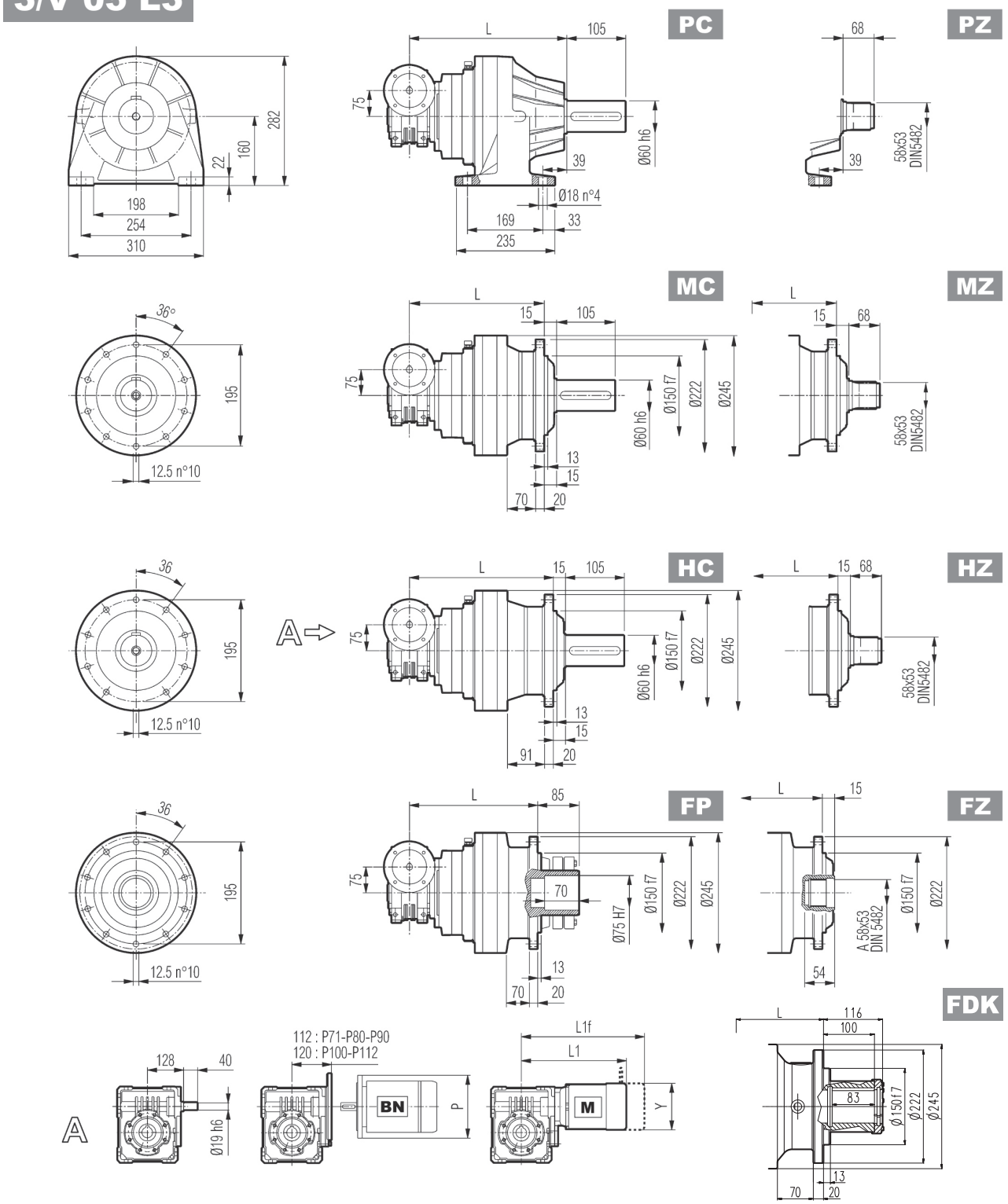

FP	M_{2max} = 7500 Nm

	L				Kg				P71	P80	P90	P100	P112
	MC - MZ	PC - PZ	HC - HZ	FP - FZ - FDK	MC - MZ	PC - PZ	HC - HZ	FP - FZ - FDK	P	P	P	P	P
3/V 05 L3	323	363	348	323	51	60	55	51	160	200	200	250	250

	S1 + M1			S2 + M2S			S3 + M3S			S3 + M3L		
	L1	L1f	Y	L1	L1f	Y	L1	L1f	Y	L1	L1f	Y
3/V 05 L3	308	369	138	333	409	156	376	472	193	408	499	193

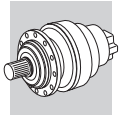

3/A 05 L2

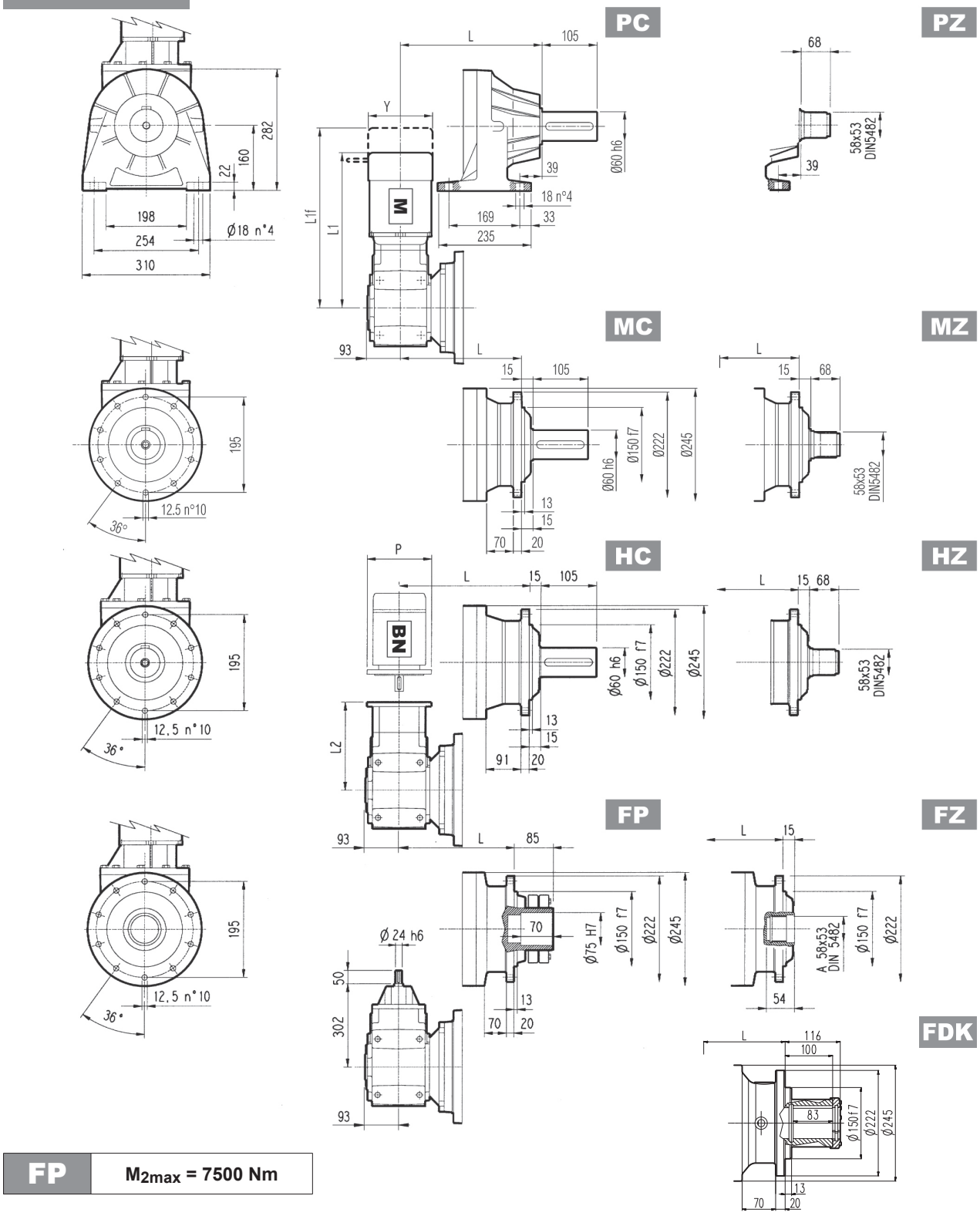

FP	M_{2max} = 7500 Nm

	L				Kg			
	MC - MZ	PC - PZ	HC - HZ	FP - FZ - FDK	MC - MZ	PC - PZ	HC - HZ	FP - FZ - FDK
3/A 05 L2	276	316	301	276	90	105	100	90

	P63		P71		P80		P90		P100		P112		P132	
	L2	P	L2	P	L2	P	L2	P	L2	P	L2	P	L2	P
3/A 05 L2	263	140	263	160	282.5	200	282.5	200	292.5	250	292.5	250	329	457

	S1 + M1			S2 + M2S			S3 + M3SA			S3 + M3LA			S4 + M4		
	L1	L1f	Y	L1	L1f	Y	L1	L1f	Y	L1	L1f	Y	L1	L1f	Y
3/A 05 L2	418	439	138	447	517	156	490	487	195	522	538	195	630	738	258

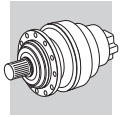

305 L | 305 R | 3/V 05 L3 | 3/A 05 L2

MC HC

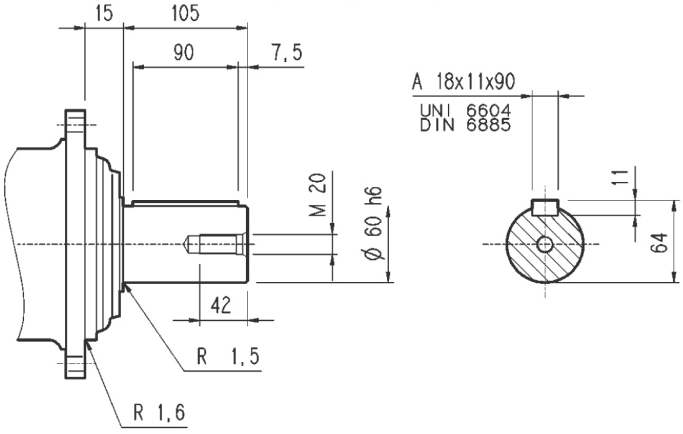

PC

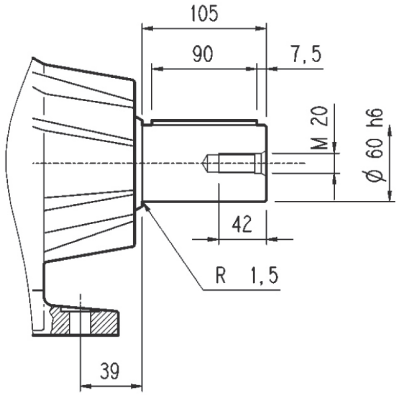

MZ HZ

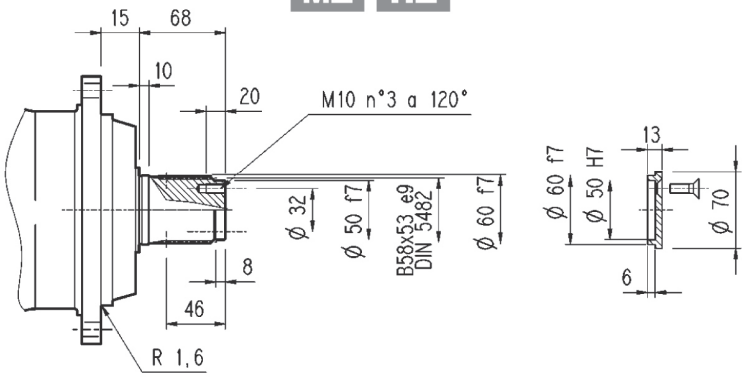

FZ

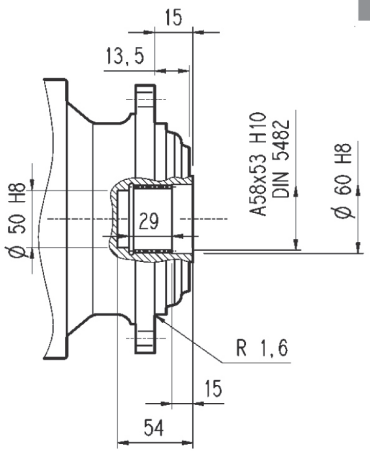

FP

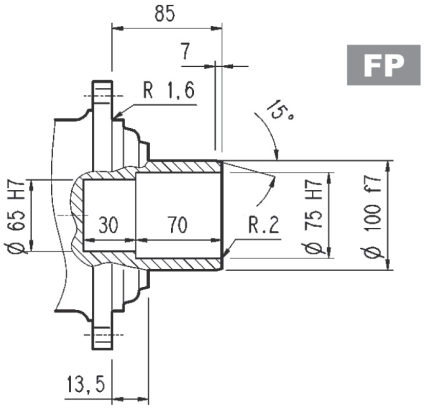

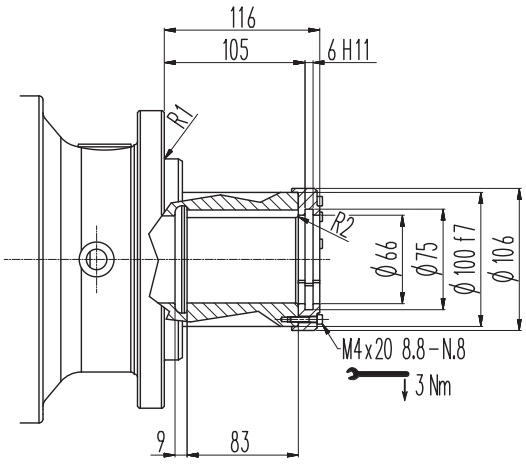

FDK

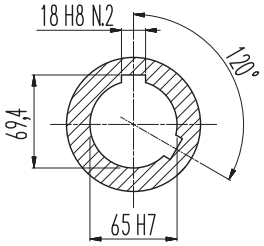

FP	M_{2max} = 7500 Nm

Flangia

W0A

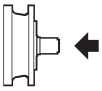

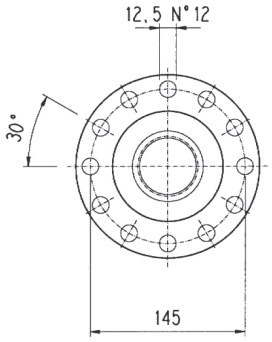

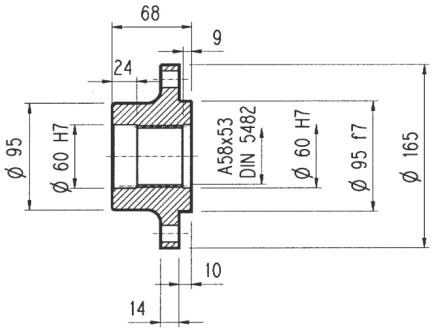

Materiale: Acciaio C40

Pignoni

P...

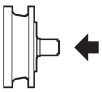

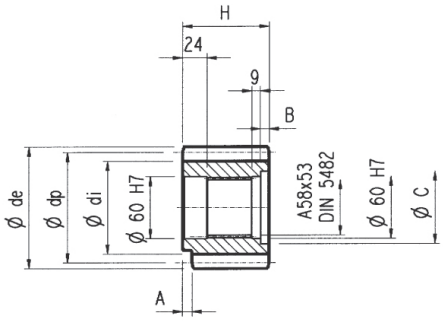

α = 20°

	m	z	x	dp	di	de	H	A	B	C	Materiale
PCL1	5	19	—	95	82	104	77	12	9	72	Acciaio 39NiCrMo3 Bonificato
PCL2	5	19	—	95	82	104	68	—	—	—	
PCM	5	20	—	100	87.5	110	68	18	—	—	Acciaio 18NiCrMo5 Cementato e temprato
PCP	5	22	—	110	97.5	120	68	18	—	—	
PDE	6	14	0.500	84	75	99.6	68	—	—	—	Acciaio 39NiCrMo3 Bonificato
PDI	6	18	0.500	108	99	123.6	68	—	—	—	
PDM	6	20	0.833	120	115	140	68	—	—	—	
PFD	8	13	0.675	104	95	127.6	68	—	—	—	Acciaio 18NiCrMo5 Cementato e temprato
PFE1	8	14	—	112	92	126	68	—	—	—	
PFE2	8	14	—	112	92	126	80	—	12	72	
PFF	8	15	—	120	100	136	68	—	—	—	Acciaio 39NiCrMo3 Bonificato
PFP	8	22	—	176	156	190	77	12	10	71	
PHG	10	16	0.500	160	145	188	75	—	7	72	

Manicotti lisci

M0A

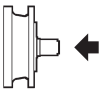

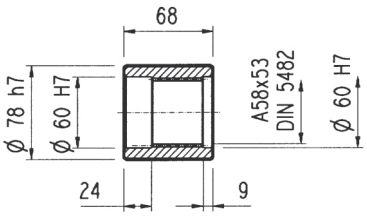

Materiale: Acciaio 16CrNi4

Barre scanalate

B0A

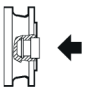

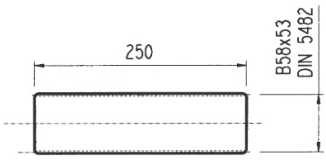

Materiale: Acciaio 18NiCrMo5 UNI 5331
da cementare e temprare 50-55 HRC

Giunto ad attrito

G0A

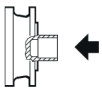

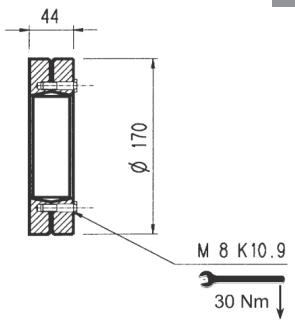

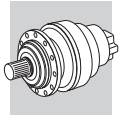

305 L 305 R

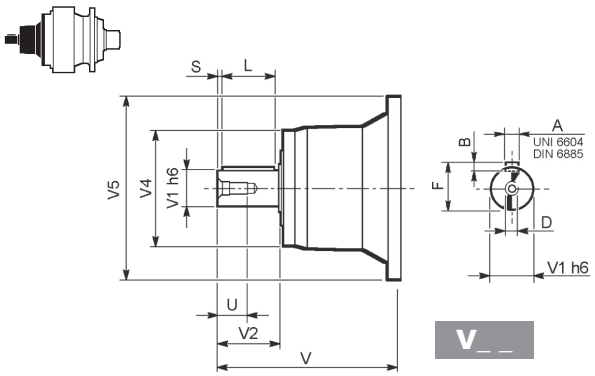

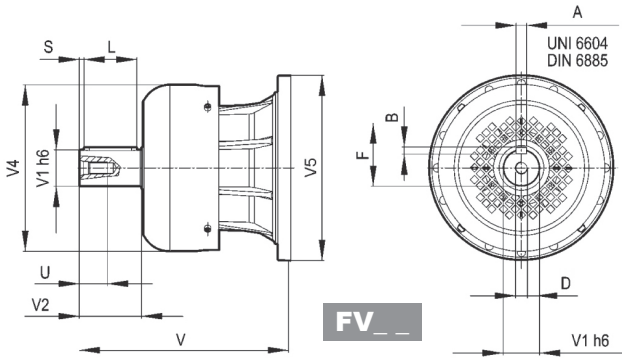

		V	V1	V2	V4	V5	A	B	F	L	S	D	U
305 L1	**V05B**	239	48	82	155	245	14	9	51.5	70	6	M16	36
	FV05B	276	48	82	219.5	244	14	9	51.5	70	6	M16	36
305 L2	**V01A**	137.5	24	36	120	186	8	7	27	30	3	M8	19
	V01B	158	38	58	120	186	10	8	41	50	4	M12	28
305 L3	**V01A**	137.5	24	36	120	186	8	7	27	30	3	M8	19
	V01B	158	38	58	120	186	10	8	41	50	4	M12	28
305 L4	**V01A**	137.5	24	36	120	186	8	7	27	30	3	M8	19
	V01B	158	38	58	120	186	10	8	41	50	4	M12	28
305 R2-R3-R4	**V01A**	137.5	24	36	120	186	8	7	27	30	3	M8	19
	V01B	158	38	58	120	186	10	8	41	50	4	M12	28

305 L 305 R

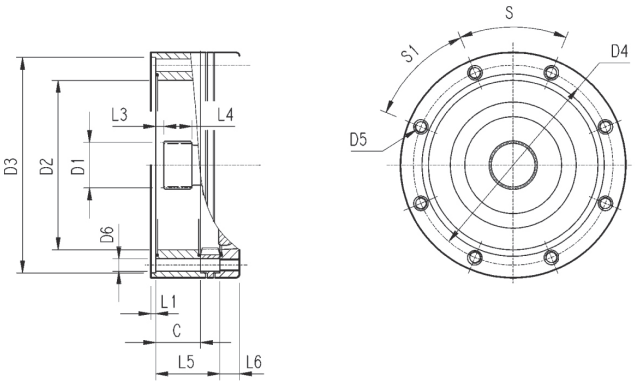

		C	D1	D2	D3	D4	D5	D6	L1	L2	L3	L4	L5	L6	S	S1	Input
305 L1	**V9AA**	37	40x36 DIN5482	140	178 H7	165	M10 n°8	11	4	—	9	18	—	18	45°	45°	A
305 L2	**V9AA**	37	40x36 DIN5482	140	178 H7	165	M10 n°8	11	4	—	9	18	65	18	45°	45°	A
305 L3	**V9AA**	37	40x36 DIN5482	140	178 H7	165	M10 n°8	11	4	—	9	18	118	18	45°	45°	A
305 L4	**V9AA**	37	40x36 DIN5482	140	178 H7	165	M10 n°8	11	4	—	9	18	171	18	45°	45°	A
305 R2-R3-R4	**V9AA**	37	40x36 DIN5482	140	178 H7	165	M10 n°8	11	4	—	9	18	37	18	45°	45°	A

3/V 05 L3

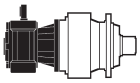

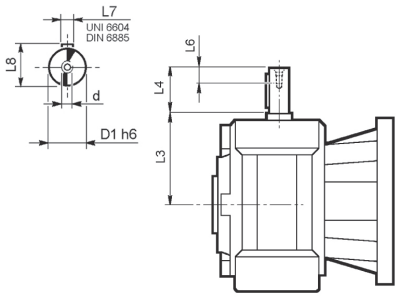

	D1 h6	L3	L4	L6	L7	L8	d
3/V 05 L3_HS	19	128	40	16	6	21.5	M6

3/A 05 L2

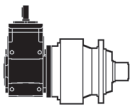

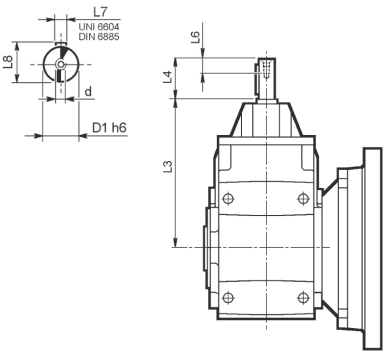

	D1 h6	L3	L4	L6	L7	L8	d
3/A 05 L2_HS	24	302	50	19	8	27	M8

Carichi radiali ed assiali ammissibili sull'albero lento per un valore di $Fh_2 : n_2 \cdot h = 100000$

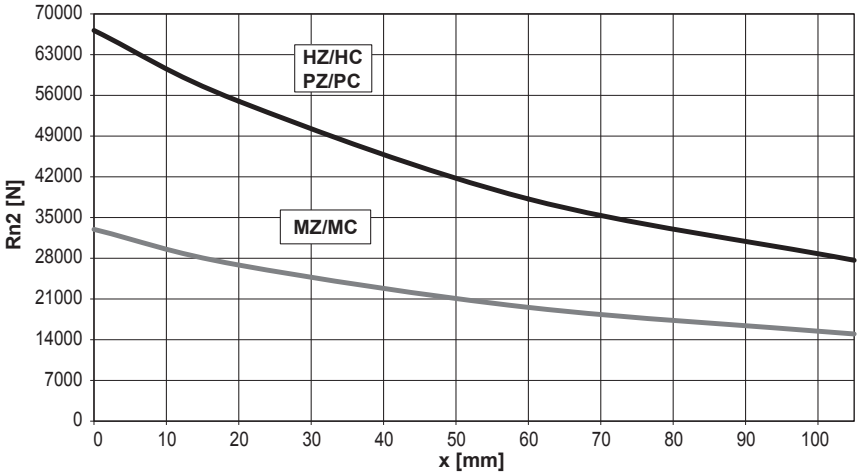

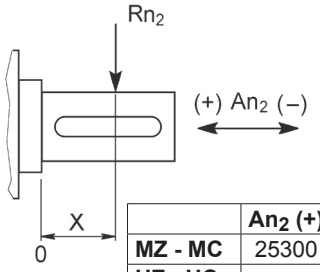

	An_2 (+)	An_2 (-)
MZ - MC	25300	20240
HZ - HC PZ - PC	27500	22000

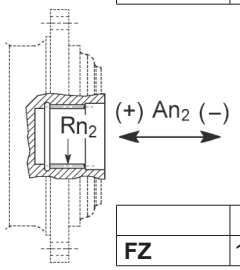

	Rn_2	An_2 (+/-)
FZ	11140	11604

Fattore fh_2 correttivo per carichi sugli alberi	$Fh_2 = n_2 \cdot h$		10000	25000	50000	100000	500000	1000000
	fh_2	FZ	**2.15**	**1.59**	**1.26**	**1.00**	**0.58**	**0.46**
		MZ - MC	**2.15**	**1.59**	**1.26**	**1.00**	**0.58**	**0.46**
		HZ - HC - PZ - PC	**1.48**	**1.48**	**1.23**	**1.00**	**0.62**	**0.50**

Carichi radiali ammissibili sull'albero veloce per un valore di $Fh_1 : n_1 \cdot h = 250000$

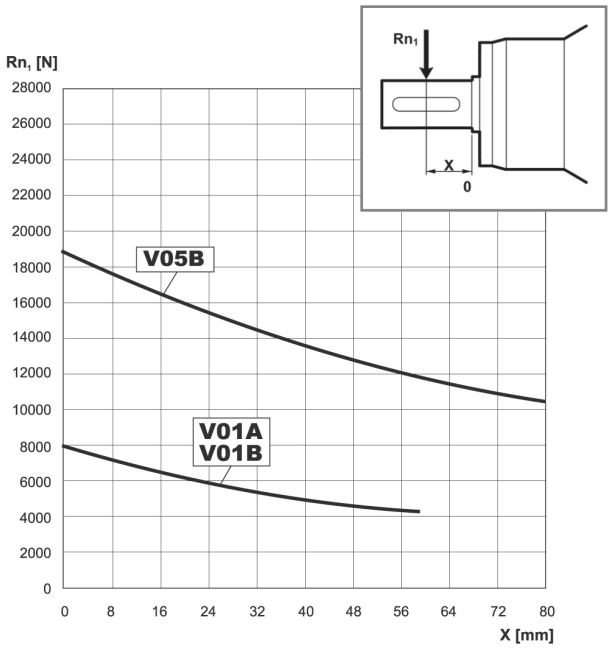

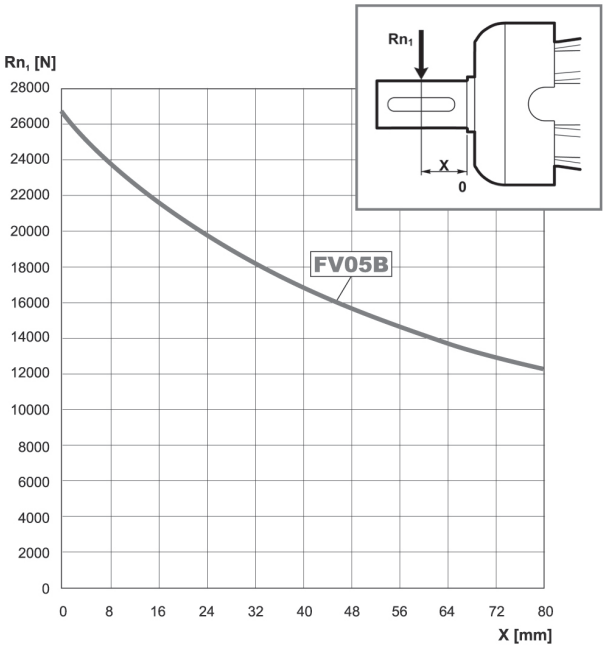

Fattore fh_1 correttivo per carichi sugli alberi	$Fh_1 = n_1 \cdot h$	250000	500000	1000000	2000000	5000000	10000000
	fh_1	**1**	**0.79**	**0.63**	**0.50**	**0.37**	**0.29**

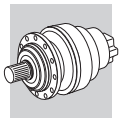

305 VK

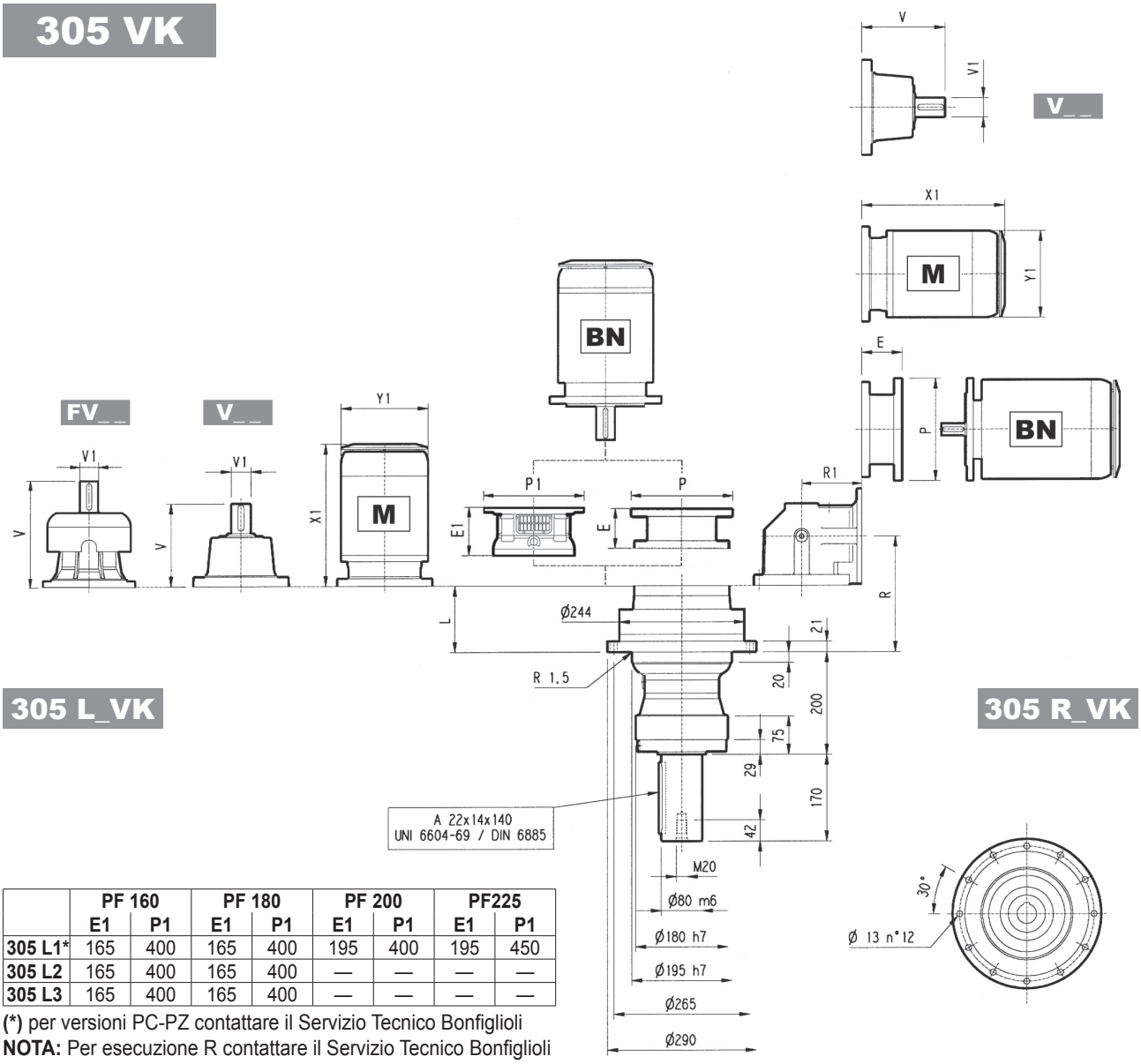

	PF 160		PF 180		PF 200		PF225	
	E1	P1	E1	P1	E1	P1	E1	P1
305 L1*	165	400	165	400	195	400	195	450
305 L2	165	400	165	400	—	—	—	—
305 L3	165	400	165	400	—	—	—	—

(*) per versioni PC-PZ contattare il Servizio Tecnico Bonfiglioli
NOTA: Per esecuzione R contattare il Servizio Tecnico Bonfiglioli

	L	Kg	V	V1	Kg	V	V1	Kg	V	V1	Kg	V	V1	Kg	P71		P80		P90		P100		P112		P132		P160		P180		P200	
															E	P	E	P	E	P	E	P	E	P	E	P	E	P	E	P	E	P
305 L1	69	70	239	48	15	—	—	—	276	48	17	—	—	—	—	—	—	—	—	—	—	—	—	—	114	300	144	350	144	350	174	400
305 L2	134	77	137.5	24	6	158	38	7	—	—	—	—	—	—	65	160	84	200	84	200	94	250	94	250	114	300	144	350	—	—	—	—
305 L3	187	81	137.5	24	6	158	38	7	—	—	—	—	—	—	65	160	84	200	84	200	94	250	94	250	114	300	144	350	—	—	—	—
305 L4	240	85	137.5	24	6	158	38	7	—	—	—	—	—	—	65	160	84	200	84	200	94	250	94	250	114	300	144	350	—	—	—	—

	S1 + M1			S2 + M2S			S3 + M3S			S3 + M3L			S4 + M4			S5 + M5S			S5 + M5L		
	X1	X2	Y1	X1	X2	Y1	X1	X2	Y1	X1	X2	Y1	X1	X2	Y1	X1	X2	Y1	X1	X2	Y1
305 L1	—	—	—	—	—	—	—	—	—	—	—	—	460	571	258	552	692	310	596	736	310
305 L2	—	—	—	280	352	156	325	421	195	357	449	195	460	571	258	—	—	—	—	—	—
305 L3	253	314	138	280	352	156	325	421	195	357	449	195	460	571	258	—	—	—	—	—	—
305 L4	253	314	138	280	352	156	325	421	195	357	449	195	460	571	258	—	—	—	—	—	—

	R	R1	Kg	V	V1	Kg	V	V1	Kg	P71		P80		P90		P100		P112		P132	
										E	P	E	P	E	P	E	P	E	P	E	P
305 R2	161	140	90	137.5	24	6	158	38	7	65	160	84	200	84	200	94	250	94	250	114	300
305 R3	226	122	92	137.5	24	6	158	38	7	65	160	84	200	84	200	94	250	94	250	114	300
305 R4	279	122	95	137.5	24	6	158	38	7	65	160	84	200	84	200	94	250	94	250	114	300

	S1 + M1			S2 + M2S			S3 + M3S			S3 + M3L			S4 + M4		
	X1	X2	Y1	X1	X2	Y1	X1	X2	Y1	X1	X2	Y1	X1	X2	Y1
305 R2	—	—	—	328	400	156	373	469	195	405	497	195	508	619	258
305 R3	253	314	138	328	400	156	373	469	195	405	497	195	508	619	258
305 R4	253	314	138	328	400	156	373	469	195	405	497	195	508	619	258

305 VK

Il diagramma seguente consente di ricavare il carico radiale ammissibile R_{x2} quando questo è applicato alla distanza x dallo spallamento dell'albero lento del riduttore.
Le curve si riferiscono al valore risultante dal rapporto fra il carico assiale A_{n2} e il carico radiale R_{n2}, entrambi riferiti a n_2 = 10 min^{-1} e durata teorica di 10000 h.

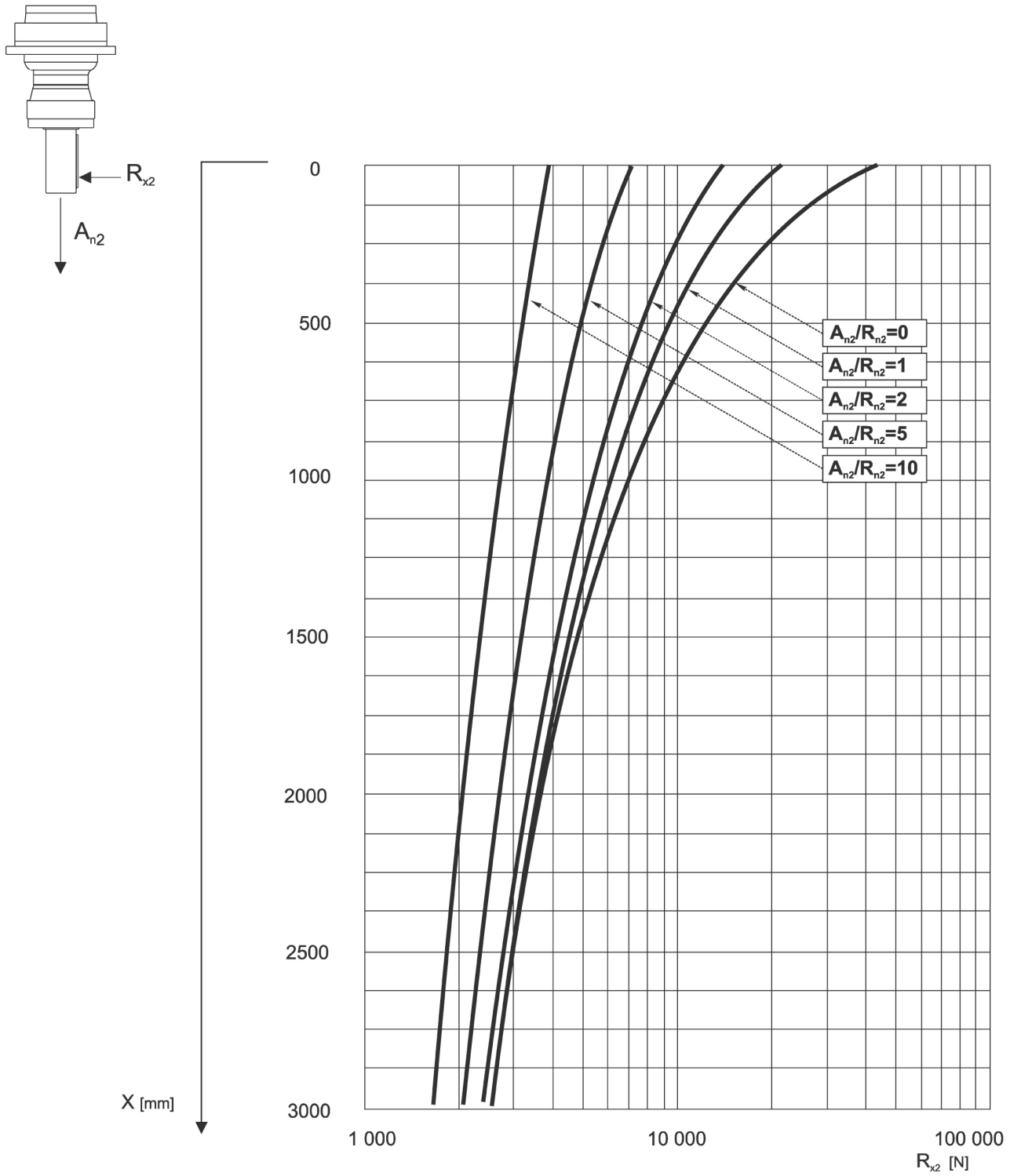

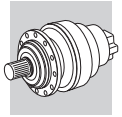

306 L

	Hydraulic motor										
	MG							471			Kg
cm³	050	080	100	125	160	200	250				
	M1							M2	M3	M4	
306 L2	–	–	–	–	203	210	219	135	77	1/4G	20

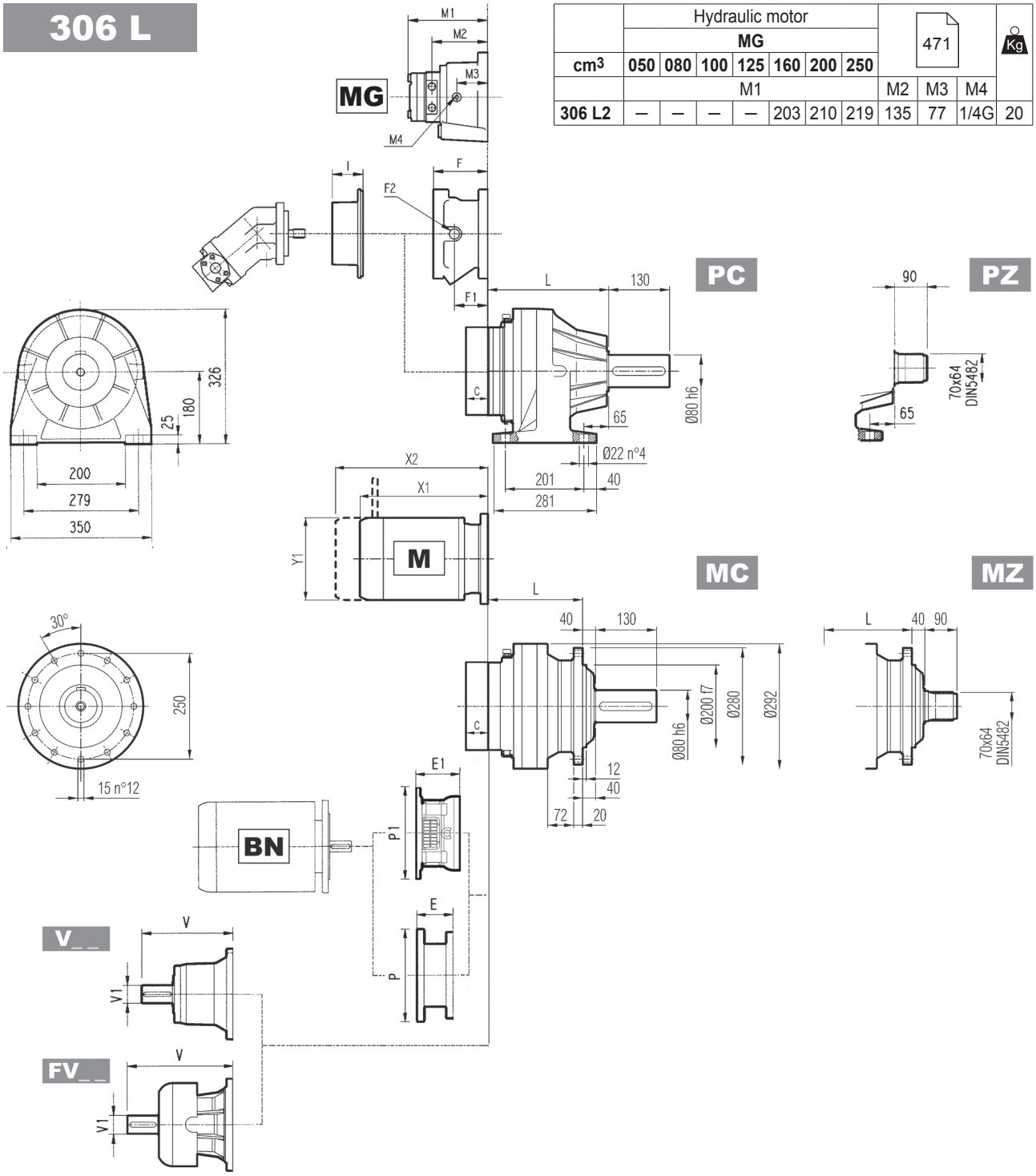

	L				Kg			
	MC - MZ	PC - PZ	HC - HZ	FP - FZ - FDK	MC - MZ	PC - PZ	HC - HZ	FP - FZ - FDK
306 L1	160	235	195	160	65	85	70	65
306 L2	225	300	260	225	74	95	79	74
306 L3	278	353	313	278	78	98	83	78
306 L4	331	406	366	331	82	103	87	82

	V	V1	Kg	V	V1	Kg	V	V1	Kg	V	V1	Kg	C	Input	I	F	F1	F2	Type	Input	Kg
306 L1	307	60	23	—	—	—	357	60	28	—	—	—	45	B		195	147	1/4 G	6	B	28
306 L2	239	48	15	—	—	—	276	48	17	—	—	—	37	A		145	95	1/4 G	5	A	16
306 L3	137.5	24	6	158	38	7	—	—	—	—	—	—	37	A		105	65	1/4 G	4	A	10
306 L4	137.5	24	6	158	38	7	—	—	—	—	—	—	37	A	461	105	65	1/4 G	4	A	10

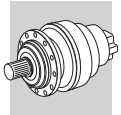

306 L

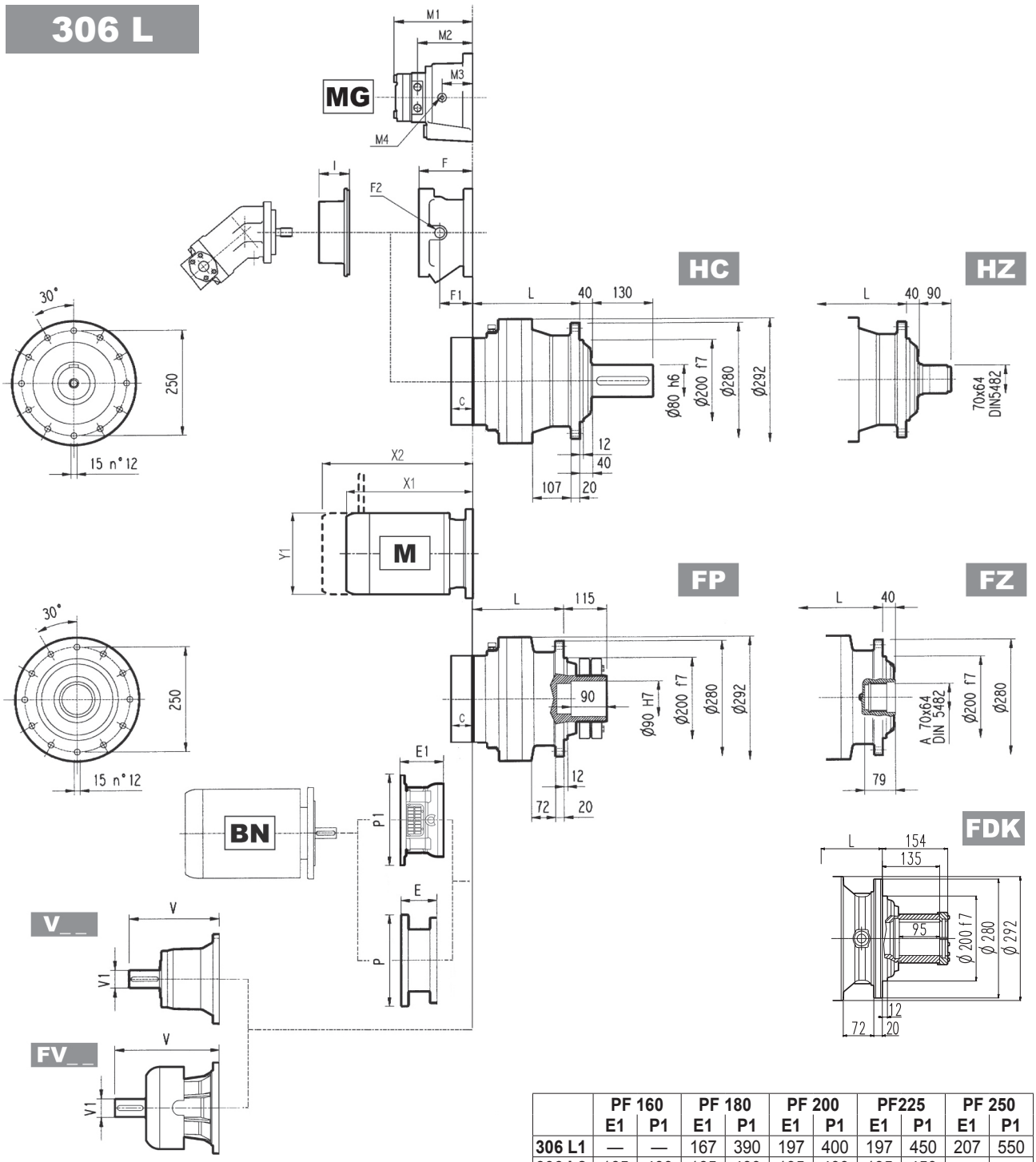

	PF 160		PF 180		PF 200		PF225		PF 250	
	E1	P1	E1	P1	E1	P1	E1	P1	E1	P1
306 L1	—	—	167	390	197	400	197	450	207	550
306 L2	165	400	165	400	195	400	195	450	—	—
306 L3	165	400	165	400	—	—	—	—	—	—

NOTA: Per esecuzione R contattare il Servizio Tecnico Bonfiglioli

FP	**M_{2max} = 12000 Nm**

	P71		P80		P90		P100		P112		P132		P160		P180		P200		P225		P250	
	E	P	E	P	E	P	E	P	E	P	E	P	E	P	E	P	E	P	E	P	E	P
306 L1	—	—	—	—	—	—	—	—	—	—	—	—	144	350	153	350	183	400	212	450	193	550
306 L2	—	—	—	—	—	—	—	—	—	—	114	300	144	350	144	350	174	400	—	—	—	—
306 L3	65	160	84	200	84	200	94	250	94	250	114	300	144	350	—	—	—	—	—	—	—	—
306 L4	65	160	84	200	84	200	94	250	94	250	114	300	144	350	—	—	—	—	—	—	—	—

	S1 + M1			S2 + M2S			S3 + M3S			S3 + M3L			S4 + M4			S5 + M5S			S5 + M5L		
	X1	X2	Y1	X1	X2	Y1	X1	X2	Y1	X1	X2	Y1	X1	X2	Y1	X1	X2	Y1	X1	X2	Y1
306 L1	—	—	—	—	—	—	—	—	—	—	—	—	—	—	—	—	—	—	—	—	—
306 L2	—	—	—	—	—	—	—	—	—	—	—	—	460	571	258	552	692	310	596	736	310
306 L3	253	314	138	280	352	156	325	421	195	357	449	195	460	571	258	—	—	—	—	—	—
306 L4	253	314	138	280	352	156	325	421	195	357	449	195	460	571	258	—	—	—	—	—	—

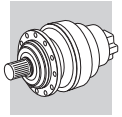

306 R

	Hydraulic motor										
	MG							471			Kg
cm³	050	080	100	125	160	200	250				
	M1							M2	M3	M4	
306 R2	–	167	171	175	181	188	197	113	60	1/4G	14
306 R3	162	167	171	175	181	–	–	113	60	1/4G	14

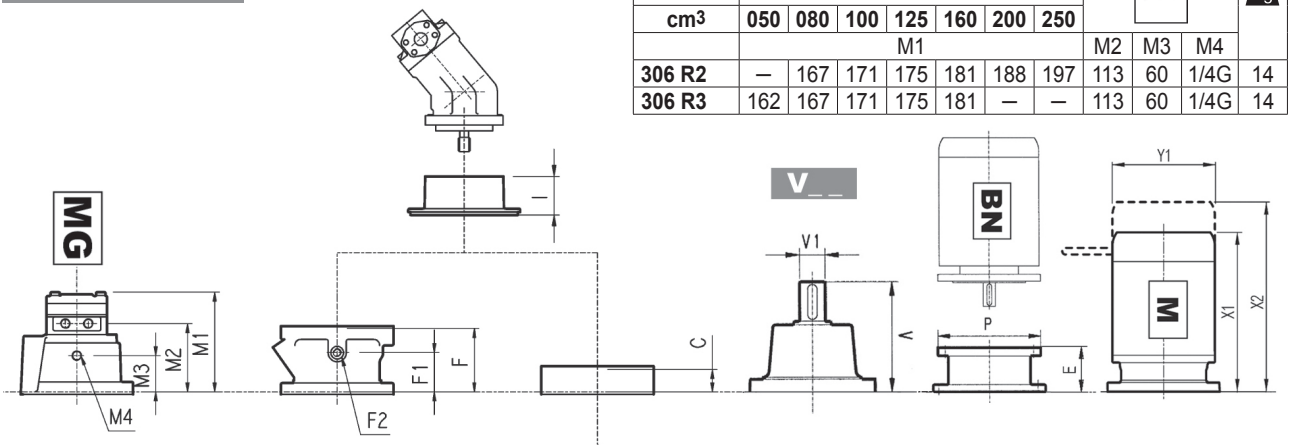

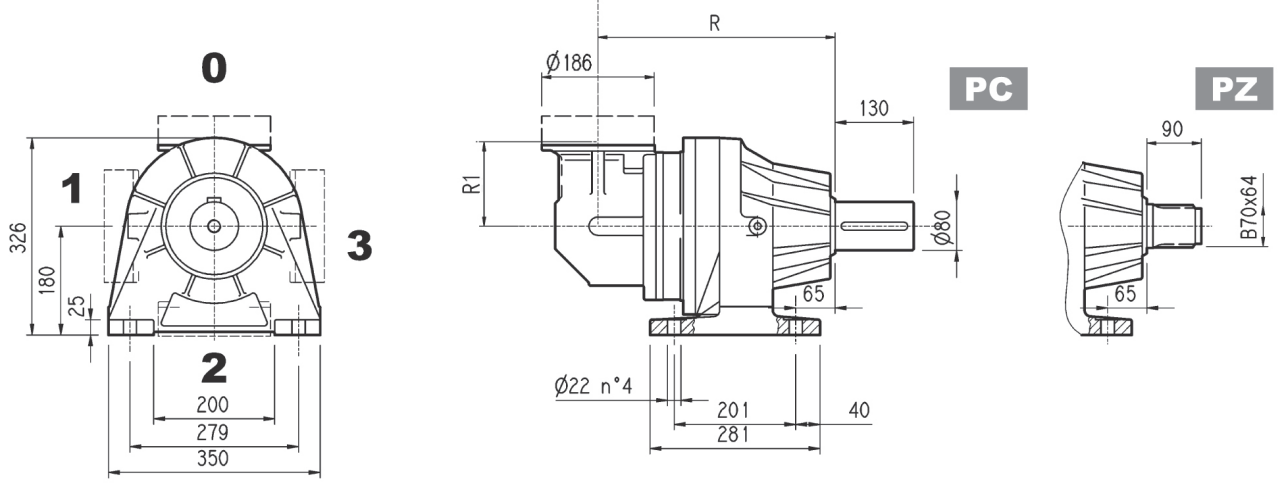

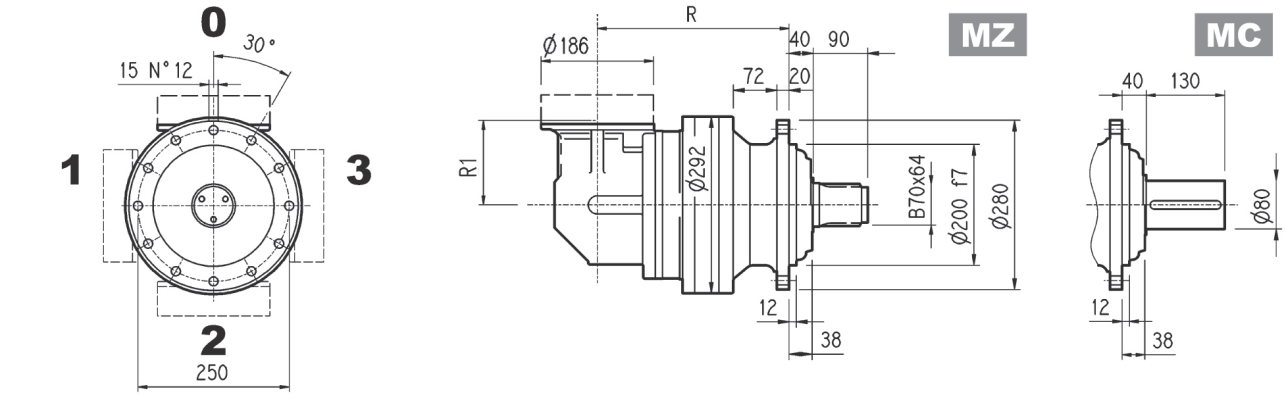

	R				R1	Kg			
	MC - MZ	PC - PZ	HC - HZ	FP - FZ - FDK		MC - MZ	PC - PZ	HC - HZ	FP - FZ - FDK
306 R2	297	372	332	297	140	89	105	94	89
306 R3	317	392	352	317	140	85	100	90	85
306 R4	370	445	405	370	122	79	95	84	79

	V	V1	Kg	V	V1	Kg	C	Input	I	F	F1	F2	Type	Input	Kg
306 R2	137.5	24	6	158	38	7	37	A		105	65	1/4 G	4	A	10
306 R3	137.5	24	6	158	38	7	37	A		105	65	1/4 G	4	A	10
306 R4	137.5	24	6	158	38	7	37	A	461	105	65	1/4 G	4	A	10

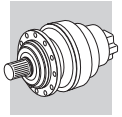

306 R

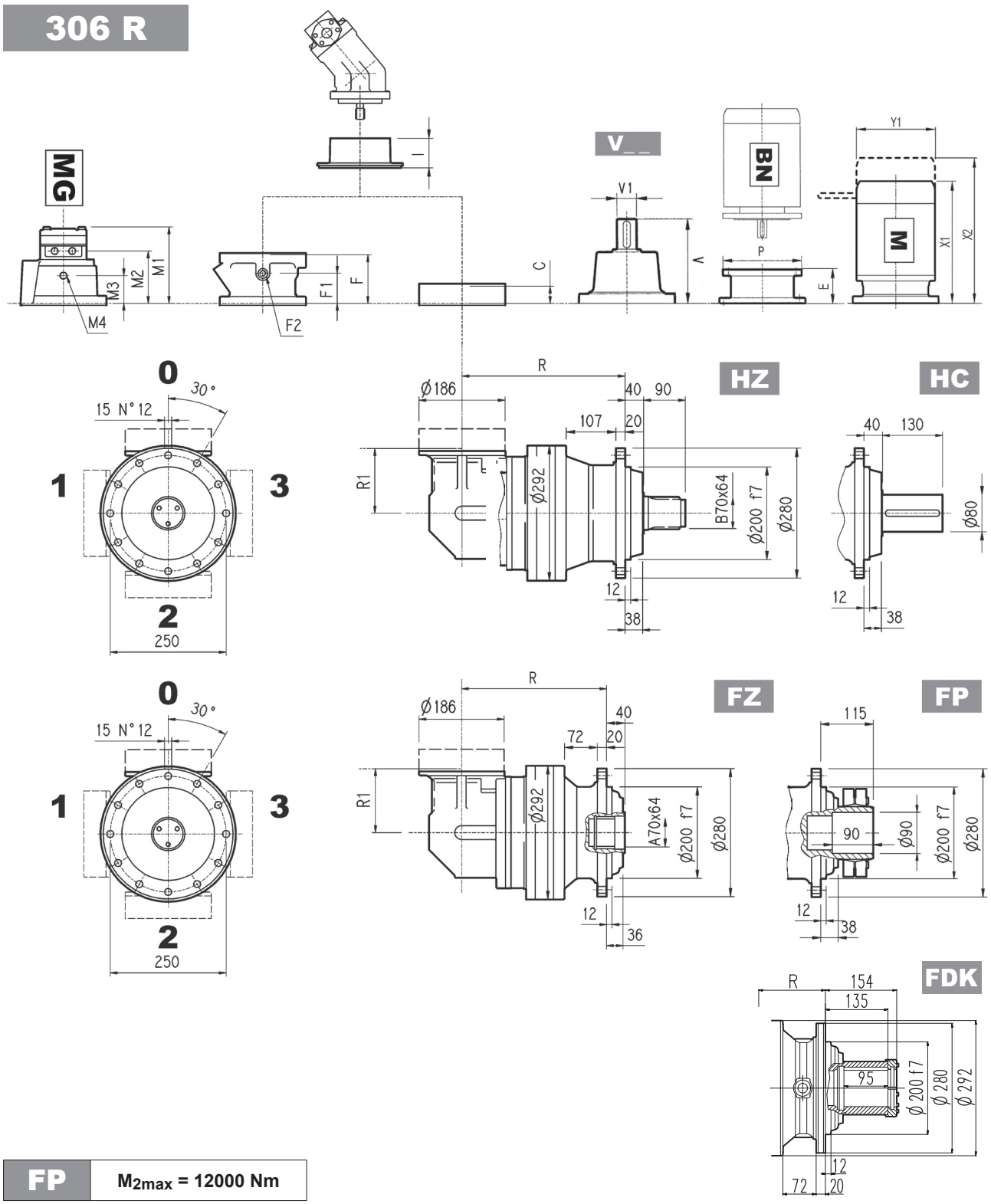

FP	M_{2max} = 12000 Nm

	P71		P80		P90		P100		P112		P132		P160	
	E	P	E	P	E	P	E	P	E	P	E	P	E	P
306 R2	65	160	84	200	84	200	94	250	94	250	114	300	144	350
306 R3	65	160	84	200	84	200	94	250	94	250	114	300	144	350
306 R4	65	160	84	200	84	200	94	250	94	250	114	300	144	350

	S1 + M1			S2 + M2S			S3 + M3S			S3 + M3L			S4 + M4		
	X1	X2	Y1	X1	X2	Y1	X1	X2	Y1	X1	X2	Y1	X1	X2	Y1
306 R2	—	—	—	328	400	156	373	469	195	405	497	195	508	619	258
306 R3	253	314	138	328	400	156	373	469	195	405	497	195	508	619	258
306 R4	253	314	138	328	400	156	373	469	195	405	497	195	508	619	258

3/V 06 L3

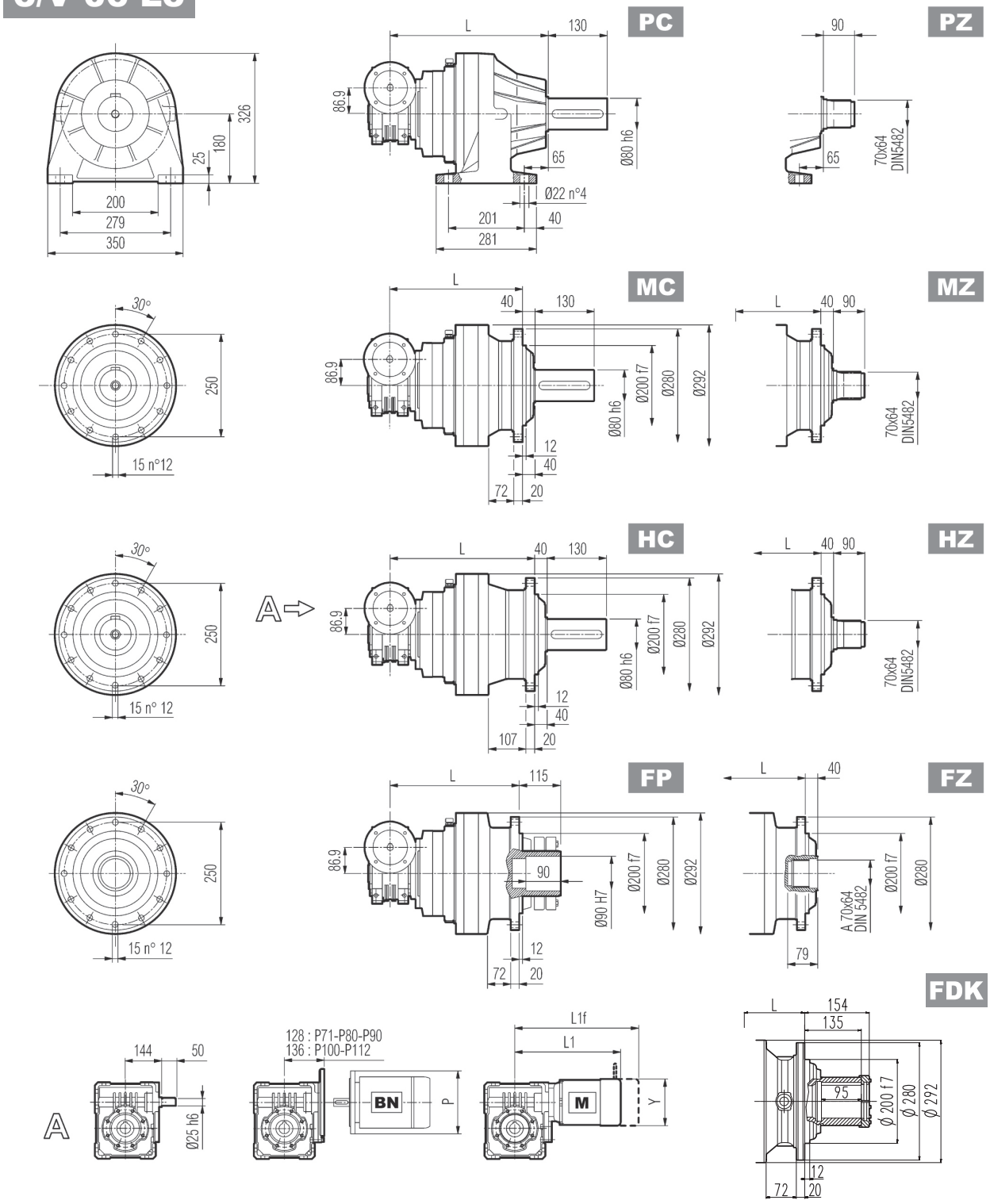

FP	M_{2max} = 12000 Nm

	L				Kg				P71	P80	P90	P100	P112
	MC - MZ	PC - PZ	HC - HZ	FP - FZ - FDK	MC - MZ	PC - PZ	HC - HZ	FP - FZ - FDK	P	P	P	P	P
3/V 06 L3	370	445	405	370	80	111	95	80	160	200	200	250	250

	S1 + M1			S2 + M2S			S3 + M3S			S3 + M3L		
	L1	L1f	Y	L1	L1f	Y	L1	L1f	Y	L1	L1f	Y
3/V 06 L3	324	385	138	349	425	156	392	477	193	424	515	193

3/A 06 L2

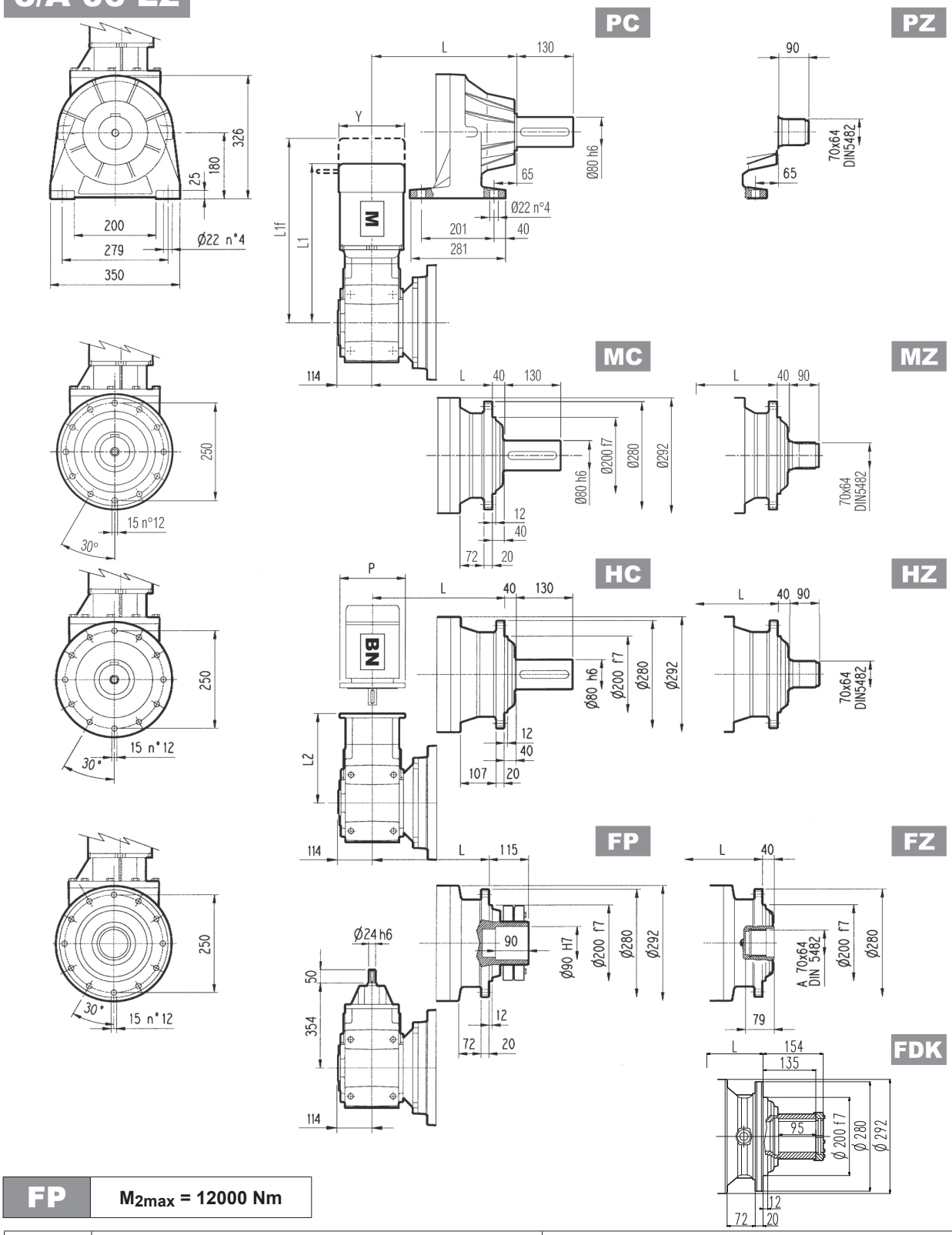

FP	M_{2max} = 12000 Nm

	L				Kg			
	MC - MZ	PC - PZ	HC - HZ	FP - FZ - FDK	MC - MZ	PC - PZ	HC - HZ	FP - FZ - FDK
3/A 06 L2	340	415	375	340	140	170	150	140

	P63		P71		P80		P90		P100		P112		P132		P160		P180	
	L2	P	L2	P	L2	P	L2	P	L2	P	L2	P	L2	P	L2	P	L2	P
3/A 06 L2	314.5	140	314.5	160	334	200	334	200	344	250	344	250	380.5	300	431	350	431	350

	S1 + M1			S2 + M2S			S3 + M3SA			S3 + M3LA			S4 + M4		
	L1	L1f	Y	L1	L1f	Y	L1	L1f	Y	L1	L1f	Y	L1	L1f	Y
3/A 06 L2	445	508	138	568	517	156	541	637	195	572	665	195	678	789	258

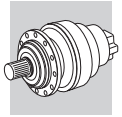

306 L | 306 R | 3/V 06 L3 | 3/A 06 L2

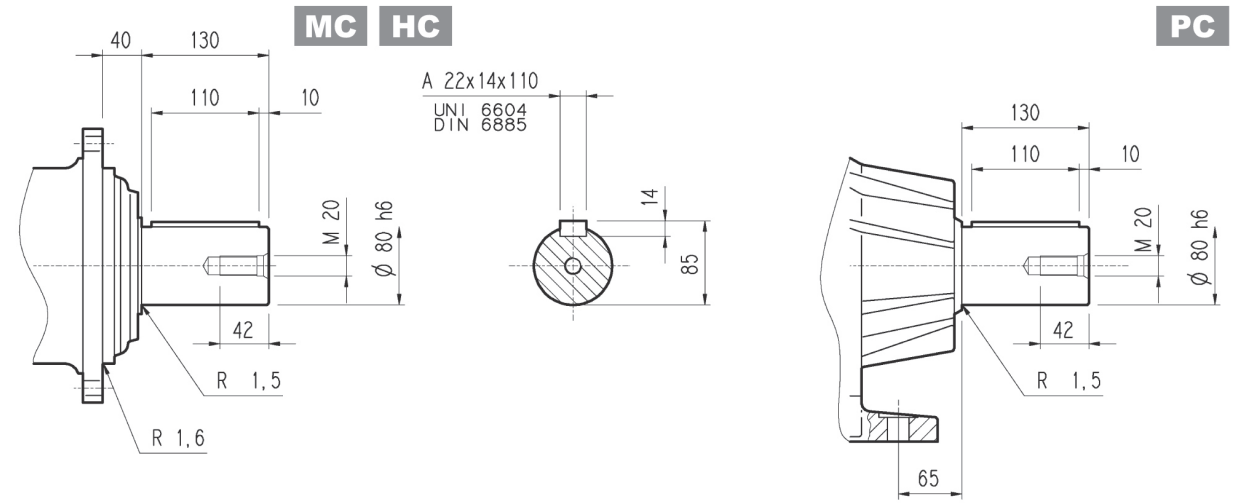

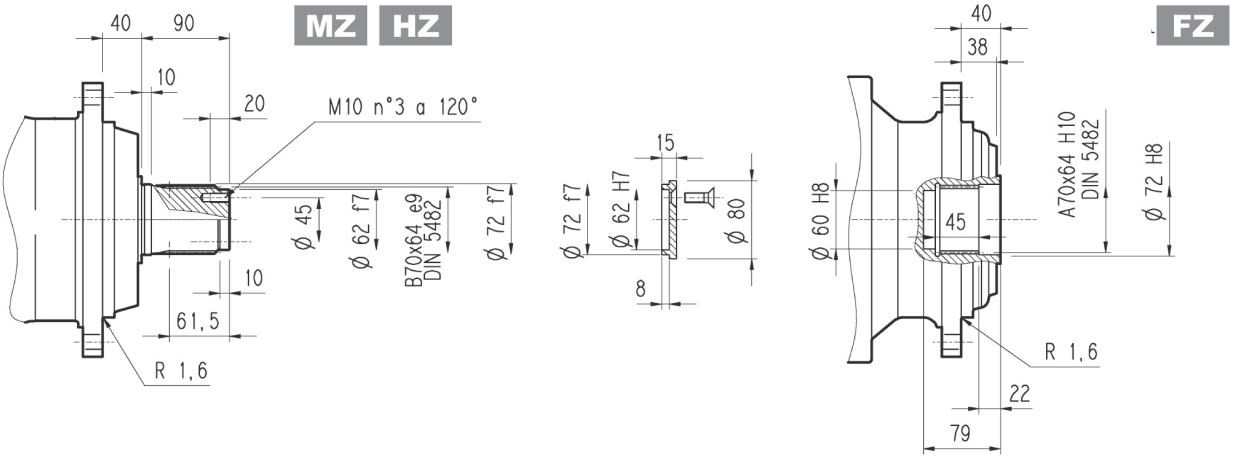

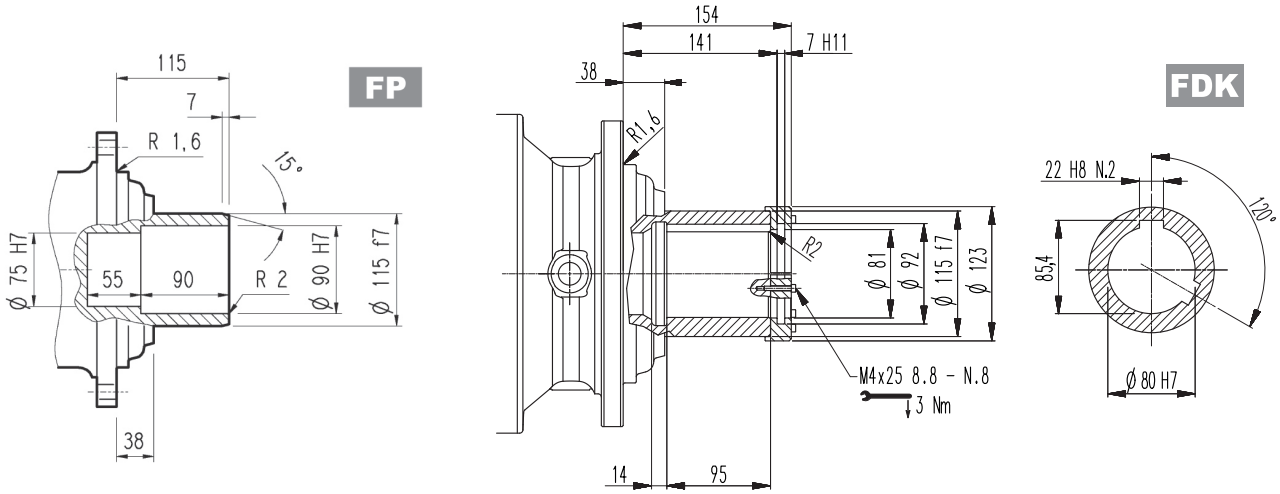

FP	M_{2max} = 12000 Nm

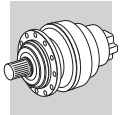

306 L | 306 R | 3/V 06 L3 | 3/A 06 L2

Flangia

W0A

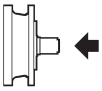

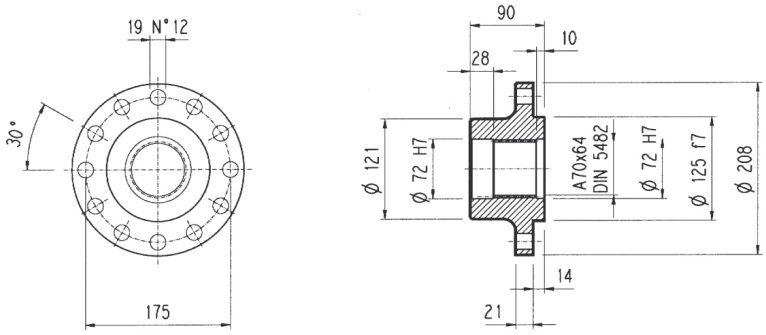

Materiale: Acciaio C40

Pignoni

P...

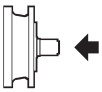

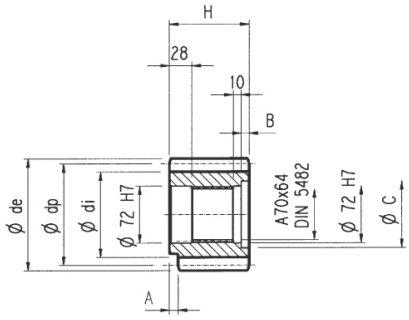

α = 20°

	m	z	x	dp	di	de	H	A	B	C	Materiale
PFF1	8	15	—	120	100	134	90	—	—	—	Acciaio 39NiCrMo3 Bonificato
PFF2	8	15	0.500	120	108	141	90	—	—	—	
PHB	10	11	0.500	110	95	136	90	10	—	—	
PHC1	10	12	0.450	120	104	145	90	—	—	—	
PHC2	10	12	0.320	120	100	144.2	90	—	—	—	
PHC3	10	12	0.350	120	101	144	90	—	—	—	
PHD1	10	13	0.950	130	124	165	90	—	—	—	
PHD2	10	13	0.500	130	115	159	90	—	—	—	
PHE1	10	14	—	140	115	160	90	—	—	—	
PHE2	10	14	0.500	140	125	166	90	—	—	—	Acciaio 18NiCrMo5 Cementato e temprato
PHF	10	15	—	150	127	167	90	24	—	—	Acciaio 39NiCrMo3 Bonificato
PHH	10	17	0.480	170	154	197.5	90	10	—	—	
PHM	10	20	—	200	175	220	90	10	—	—	Acciaio 18NiCrMo5 Cementato e temprato

Manicotti lisci

M0A

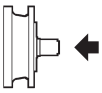

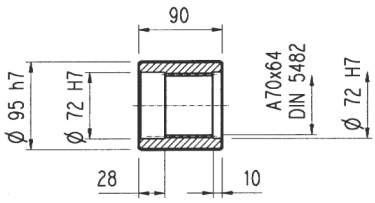

Materiale: Acciaio 16CrNi4

Barre scanalate

B0A

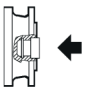

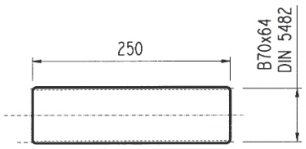

Materiale: Acciaio 18NiCrMo5 UNI 5331
da cementare e temprare 50-55 HRC

Giunto ad attrito

G0A

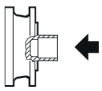

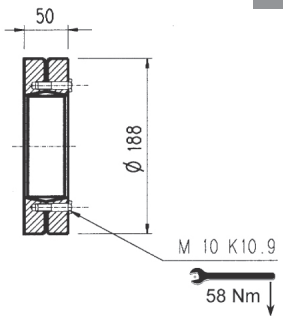

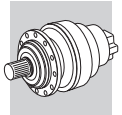

306 L 306 R

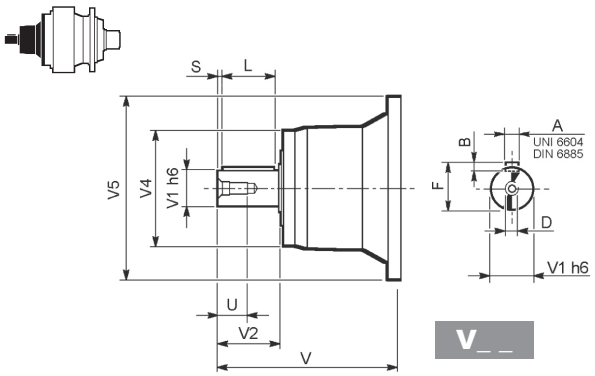

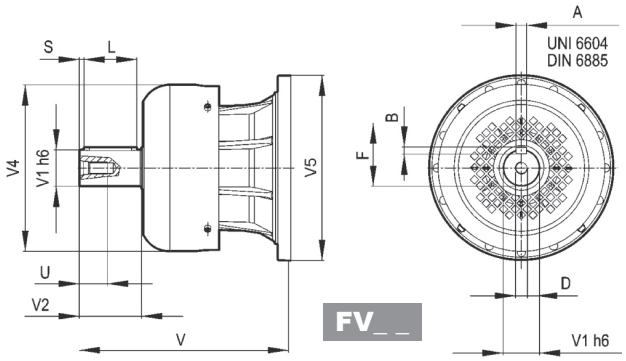

		V	V1	V2	V4	V5	A	B	F	L	S	D	U
306 L1	**V06B**	307	60	105	155	292	18	11	64	90	7.5	M16	36
	FV06B	357	60	105	309	292	18	11	64	90	7.5	M16	36
306 L2	**V05B**	239	48	82	155	245	14	9	51.5	70	6	M16	36
	FV05B	276	48	82	219.5	244	14	9	51.5	70	6	M16	36
306 L3	**V01A**	137.5	24	36	120	186	8	7	27	30	3	M8	19
	V01B	158	38	58	120	186	10	8	41	50	4	M12	28
306 L4	**V01A**	137.5	24	36	120	186	8	7	27	30	3	M8	19
	V01B	158	38	58	120	186	10	8	41	50	4	M12	28
306 R2-R3-R4	**V01A**	137.5	24	36	120	186	8	7	27	30	3	M8	19
	V01B	158	38	58	120	186	10	8	41	50	4	M12	28

306 L 306 R

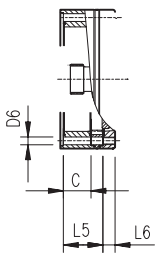

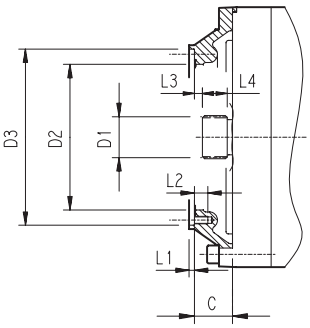

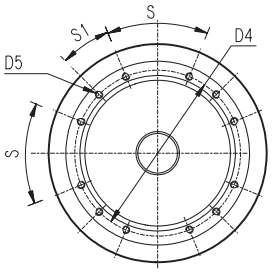

		C	D1	D2	D3	D4	D5	D6	L1	L2	L3	L4	L5	L6	S	S1	Input
306 L1	**V9AB**	45	58x53 DIN5482	195	236 H7	222	M10 n°12	—	4	18	11	22	—	—	45°	22.5°	B
306 L2	**V9AA**	37	40x36 DIN5482	140	178 H7	165	M10 n°8	—	4	18	9	18	—	—	45°	45°	A
306 L3	**V9AA**	37	40x36 DIN5482	140	178 H7	165	M10 n°8	11	4	—	9	18	53	18	45°	45°	A
306 L4	**V9AA**	37	40x36 DIN5482	140	178 H7	165	M10 n°8	11	4	—	9	18	106	18	45°	45°	A
306 R2-R3-R4	**V9AA**	37	40x36 DIN5482	140	178 H7	165	M10 n°8	11	4	—	9	18	37	18	45°	45°	A

3/V 06 L3

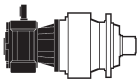

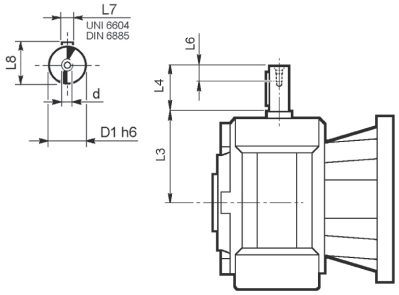

	D1 h6	L3	L4	L6	L7	L8	d
3/V 06 L3_HS	25	144	50	19	8	28	M8

3/A 06 L2

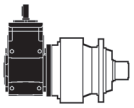

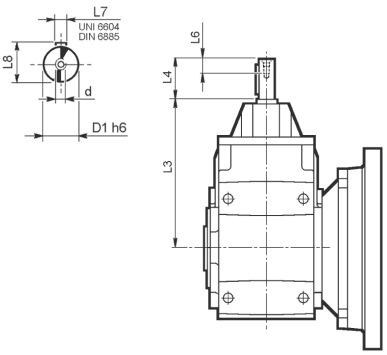

	D1 h6	L3	L4	L6	L7	L8	d
3/A 06 L2_HS	24	354	50	19	8	27	M8

Carichi radiali ed assiali ammissibili sull'albero lento per un valore di $Fh_2 : n_2 \cdot h = 100000$

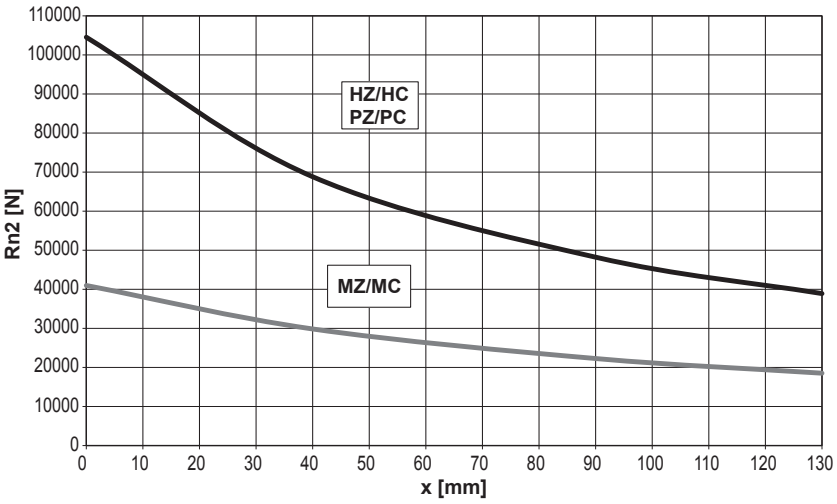

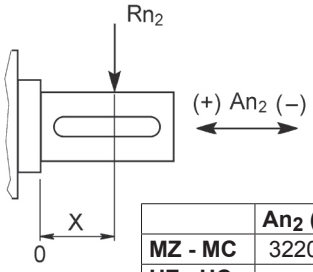

	An_2 (+)	An_2 (-)
MZ - MC	32200	20240
HZ - HC PZ - PC	60000	30000

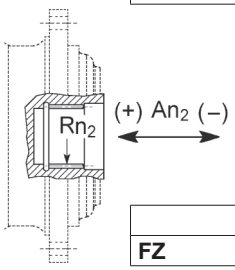

	Rn_2	An_2 (+/-)
FZ	16246	16246

Fattore fh_2 correttivo per carichi sugli alberi	$Fh_2 = n_2 \cdot h$		10000	25000	50000	100000	500000	1000000
	fh_2	FZ	**2.15**	**1.59**	**1.26**	**1.00**	**0.58**	**0.46**
		MZ - MC	**2.15**	**1.59**	**1.26**	**1.00**	**0.58**	**0.46**
		HZ - HC - PZ - PC	**1.34**	**1.34**	**1.23**	**1.00**	**0.62**	**0.50**

Carichi radiali ammissibili sull'albero veloce per un valore di $Fh_1 : n_1 \cdot h = 250000$

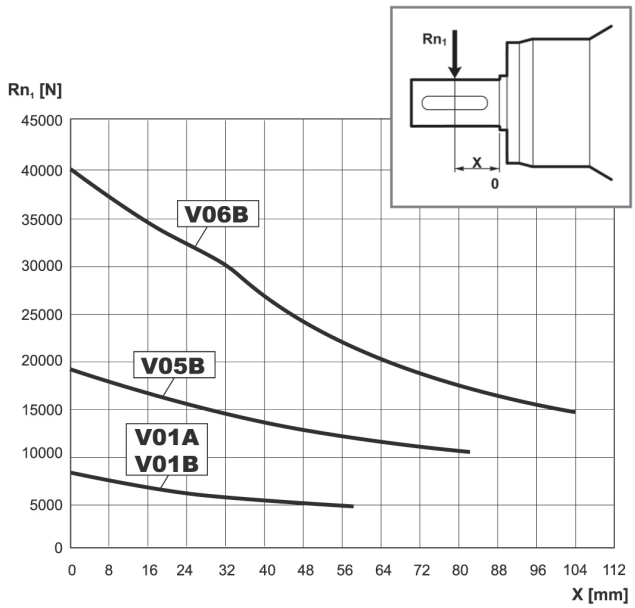

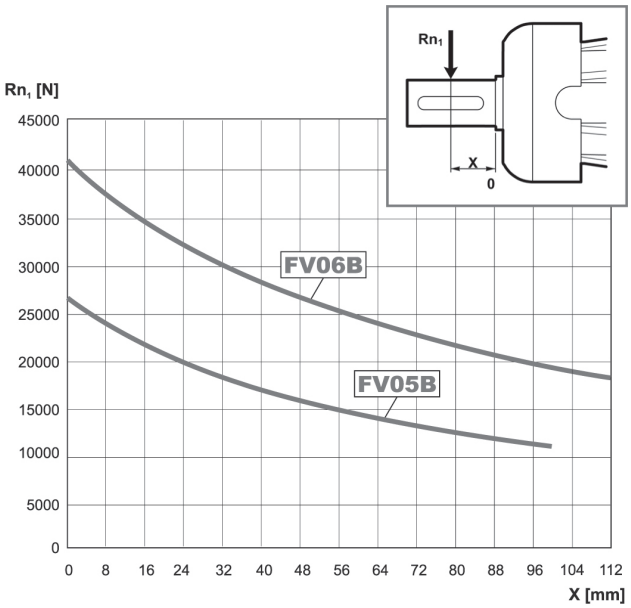

Fattore fh_1 correttivo per carichi sugli alberi	$Fh_1 = n_1 \cdot h$	250000	500000	1000000	2000000	5000000	10000000
	fh_1	**1**	**0.79**	**0.63**	**0.50**	**0.37**	**0.29**

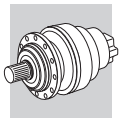

306 VK

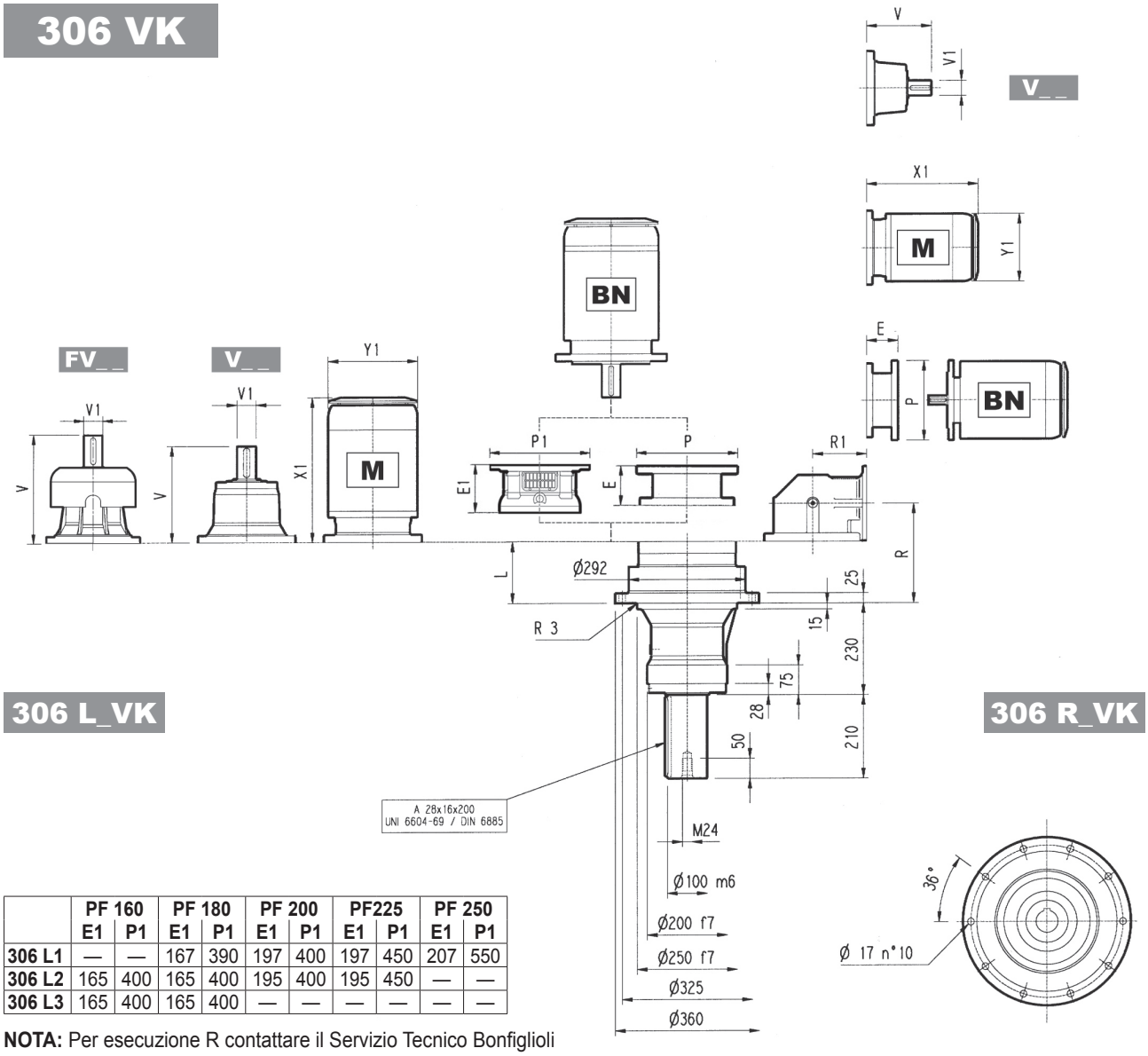

306 L_VK

306 R_VK

	PF 160		PF 180		PF 200		PF225		PF 250	
	E1	P1	E1	P1	E1	P1	E1	P1	E1	P1
306 L1	—	—	167	390	197	400	197	450	207	550
306 L2	165	400	165	400	195	400	195	450	—	—
306 L3	165	400	165	400	—	—	—	—	—	—

NOTA: Per esecuzione R contattare il Servizio Tecnico Bonfiglioli

	L	Kg	V	V1	Kg	V	V1	Kg	V	V1	Kg	V	V1	Kg	P71		P80		P90		P100		P112		P132		P160		P180		P200		P225		P250	
															E	P	E	P	E	P	E	P	E	P	E	P	E	P	E	P	E	P	E	P	E	P
306 L1	75	110	307	60	23	—	—	—	357	60	28	—	—	—	—	—	—	—	—	—	—	—	—	—	—	—	144	350	153	350	183	400	212	450	193	550
306 L2	140	120	239	48	15	—	—	—	276	48	17	—	—	—	—	—	—	—	—	—	—	—	—	—	114	300	144	350	144	350	174	400	—	—	—	—
306 L3	193	125	137.5	24	6	158	38	7	—	—	—	—	—	—	65	160	84	200	84	200	94	250	94	250	114	300	144	350	—	—	—	—	—	—	—	—
306 L4	246	130	137.5	24	6	158	38	7	—	—	—	—	—	—	65	160	84	200	84	200	94	250	94	250	114	300	144	350	—	—	—	—	—	—	—	—

	S1 + M1			S2 + M2S			S3 + M3S			S3 + M3L			S4 + M4			S5 + M5S			S5 + M5L		
	X1	X2	Y1	X1	X2	Y1	X1	X2	Y1	X1	X2	Y1	X1	X2	Y1	X1	X2	Y1	X1	X2	Y1
306 L1	—	—	—	—	—	—	—	—	—	—	—	—	—	—	—	—	—	—	—	—	—
306 L2	—	—	—	—	—	—	—	—	—	—	—	—	460	571	258	552	692	310	596	736	310
306 L3	253	314	138	280	352	156	325	421	195	357	449	195	460	571	258	—	—	—	—	—	—
306 L4	253	314	138	280	352	156	325	421	195	357	449	195	460	571	258	—	—	—	—	—	—

	R	R1	Kg	V	V1	Kg	V	V1	Kg	P71		P80		P90		P100		P112		P132		P160	
										E	P	E	P	E	P	E	P	E	P	E	P	E	P
306 R2	212	140	90	137.5	24	6	158	38	7	65	160	84	200	84	200	94	250	94	250	114	300	144	350
306 R3	232	140	92	137.5	24	6	158	38	7	65	160	84	200	84	200	94	250	94	250	114	300	144	350
306 R4	285	122	95	137.5	24	6	158	38	7	65	160	84	200	84	200	94	250	94	250	114	300	144	350

	S1 + M1			S2 + M2S			S3 + M3S			S3 + M3L			S4 + M4		
	X1	X2	Y1	X1	X2	Y1	X1	X2	Y1	X1	X2	Y1	X1	X2	Y1
306 R2	—	—	—	328	400	156	373	469	195	405	497	195	508	619	258
306 R3	253	314	138	328	400	156	373	469	195	405	497	195	508	619	258
306 R4	253	314	138	328	400	156	373	469	195	405	497	195	508	619	258

306 VK

Il diagramma seguente consente di ricavare il carico radiale ammissibile R_{x2} quando questo è applicato alla distanza x dallo spallamento dell'albero lento del riduttore.
Le curve si riferiscono al valore risultante dal rapporto fra il carico assiale A_{n2} e il carico radiale R_{n2}, entrambi riferiti a n_2 = 10 min^{-1} e durata teorica di 10000 h.

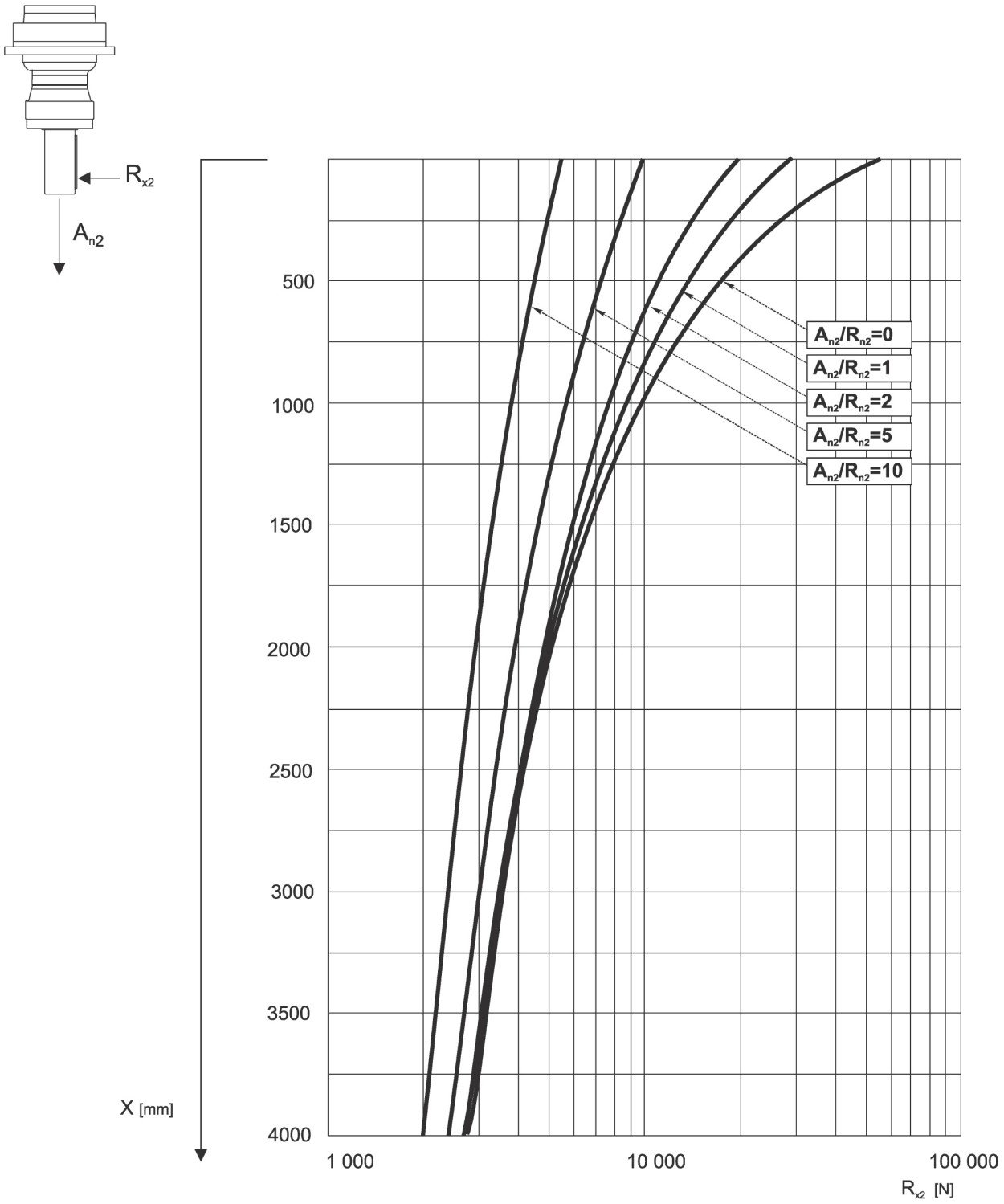

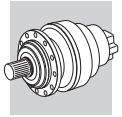

307 L

	Hydraulic motor										
	MG							471			Kg
cm³	050	080	100	125	160	200	250				
	M1							M2	M3	M4	
307 L2	–	–	–	–	203	210	219	135	77	1/4G	20

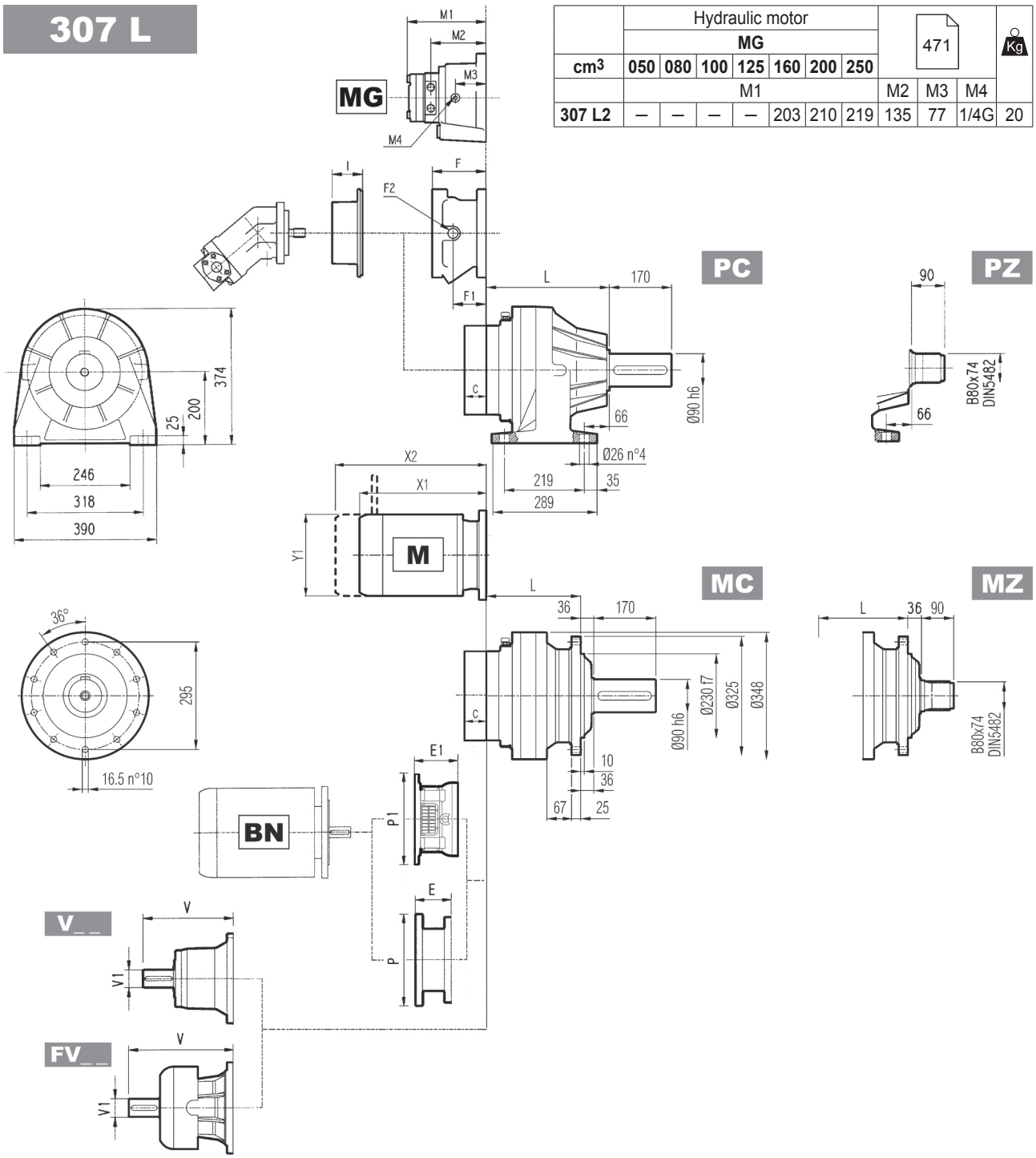

	L				Kg			
	MC - MZ	PC - PZ	HC - HZ	FP - FZ - FDK	MC - MZ	PC - PZ	HC - HZ	FP - FZ - FDK
307 L1	165	246	210	165	85	120	105	85
307 L2	254	335	299	254	97	132	117	97
307 L3	319	400	364	319	104	139	124	104
307 L4	372	453	417	372	108	143	128	108

	V	V1	Kg	V	V1	Kg	V	V1	Kg	V	V1	Kg	C	Input	I	F	F1	F2	Type	Input	Kg
307 L1	315	80	35	313	60	28	375	80	48	363	60	34	51	B	461	201	153	1/4 G	6	B	28
307 L2	239	48	15	—	—	—	276	48	17	—	—	—	37	A		145	95	1/4 G	5	A	16
307 L3	137.5	24	6	158	38	7	—	—	—	—	—	—	37	A		105	65	1/4 G	4	A	10
307 L4	137.5	24	6	158	38	7	—	—	—	—	—	—	37	A		105	65	1/4 G	4	A	10

307 L

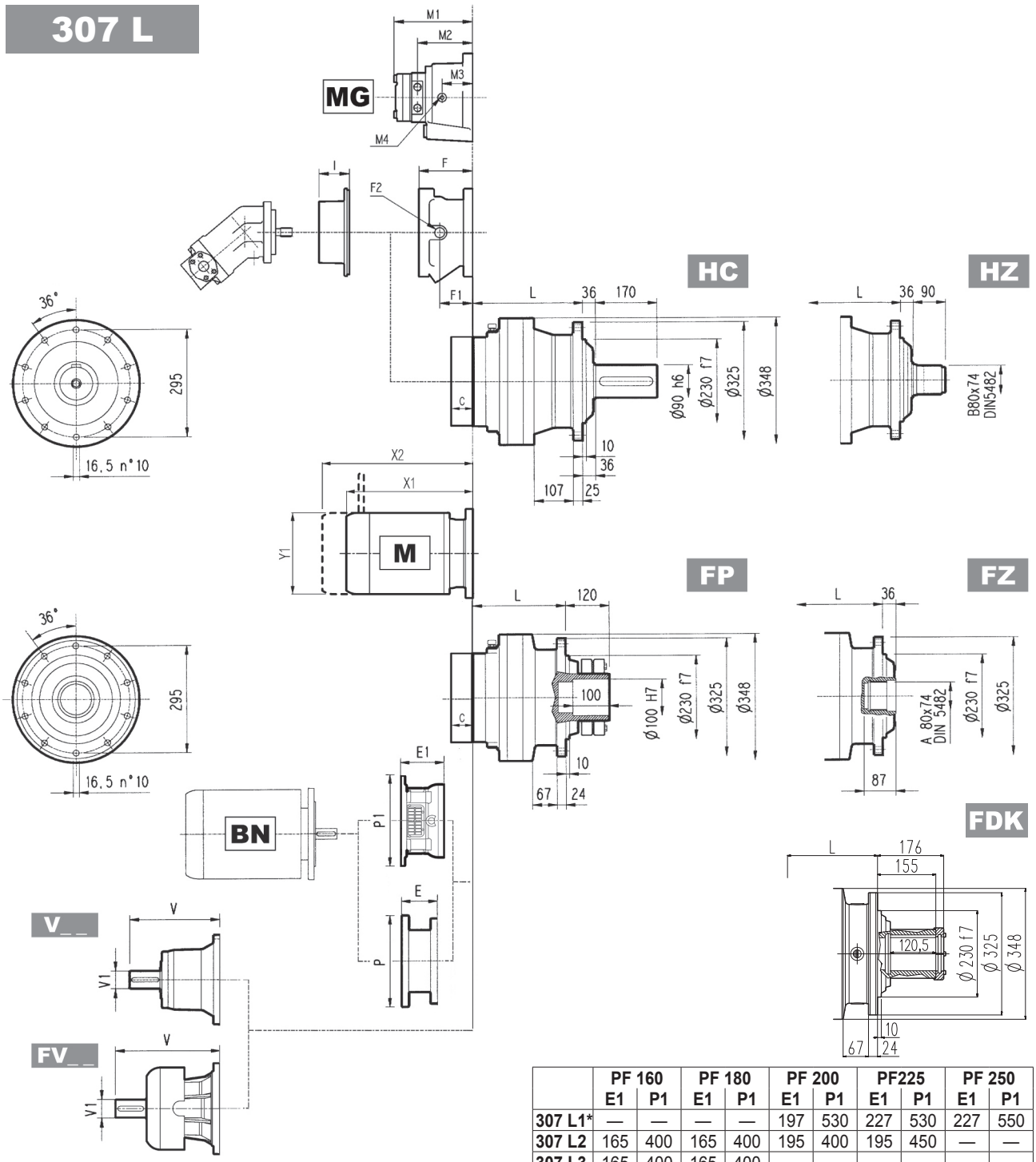

	PF 160		PF 180		PF 200		PF225		PF 250	
	E1	P1	E1	P1	E1	P1	E1	P1	E1	P1
307 L1*	—	—	—	—	197	530	227	530	227	550
307 L2	165	400	165	400	195	400	195	450	—	—
307 L3	165	400	165	400	—	—	—	—	—	—
307 L4	165	400	165	400	—	—	—	—	—	—

(*) per versioni PC-PZ contattare il Servizio Tecnico Bonfiglioli
NOTA: Per esecuzione R contattare il Servizio Tecnico Bonfiglioli

FP | **M_{2max} = 18200 Nm**

	P71		P80		P90		P100		P112		P132		P160		P180		P200		P225		P250	
	E	P	E	P	E	P	E	P	E	P	E	P	E	P	E	P	E	P	E	P	E	P
307 L1	—	—	—	—	—	—	—	—	—	—	—	—	—	—	195	350	186	400	216	450	215	550
307 L2	—	—	—	—	—	—	—	—	—	—	114	300	144	350	144	350	174	400	—	—	—	—
307 L3	65	160	84	200	84	200	94	250	94	250	114	300	144	350	—	—	—	—	—	—	—	—
307 L4	65	160	84	200	84	200	94	250	94	250	114	300	144	350	—	—	—	—	—	—	—	—

	S1 + M1			S2 + M2S			S3 + M3S			S3 + M3L			S4 + M4			S5 + M5S			S5 + M5L		
	X1	X2	Y1	X1	X2	Y1	X1	X2	Y1	X1	X2	Y1	X1	X2	Y1	X1	X2	Y1	X1	X2	Y1
307 L1	—	—	—	—	—	—	—	—	—	—	—	—	—	—	—	—	—	—	—	—	—
307 L2	—	—	—	—	—	—	—	—	—	—	—	—	460	571	258	552	692	310	596	736	310
307 L3	—	—	—	280	352	156	325	421	195	357	449	195	460	571	258	—	—	—	—	—	—
307 L4	253	314	138	280	352	156	325	421	195	357	449	195	460	571	258	—	—	—	—	—	—

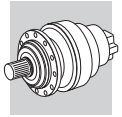

307 R

	Hydraulic motor										
	MG							471			Kg
cm³	050	080	100	125	160	200	250				
	M1							M2	M3	M4	
307 R2	—	—	171	175	181	188	197	113	60	1/4G	14
307 R3	—	167	171	175	181	188	197	113	60	1/4G	14

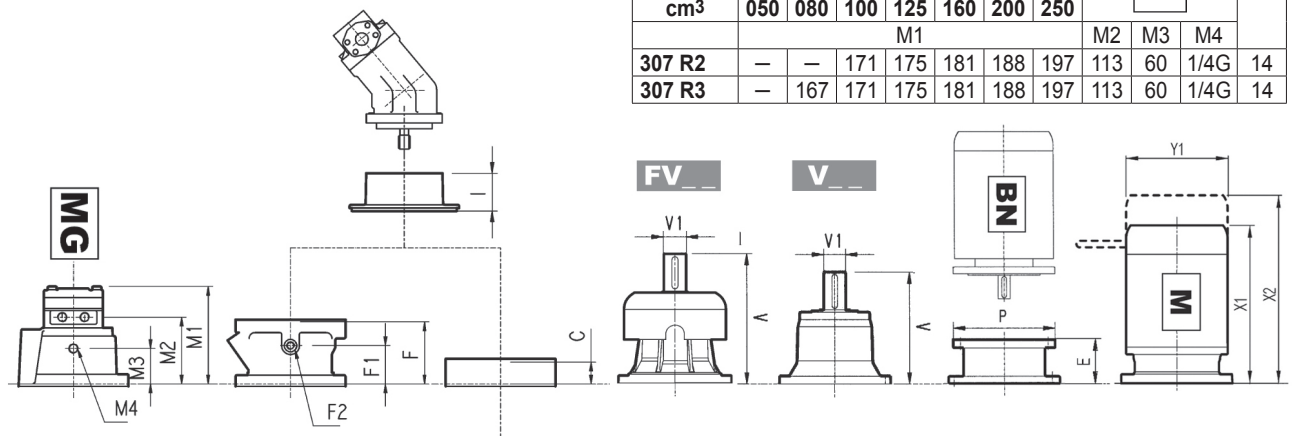

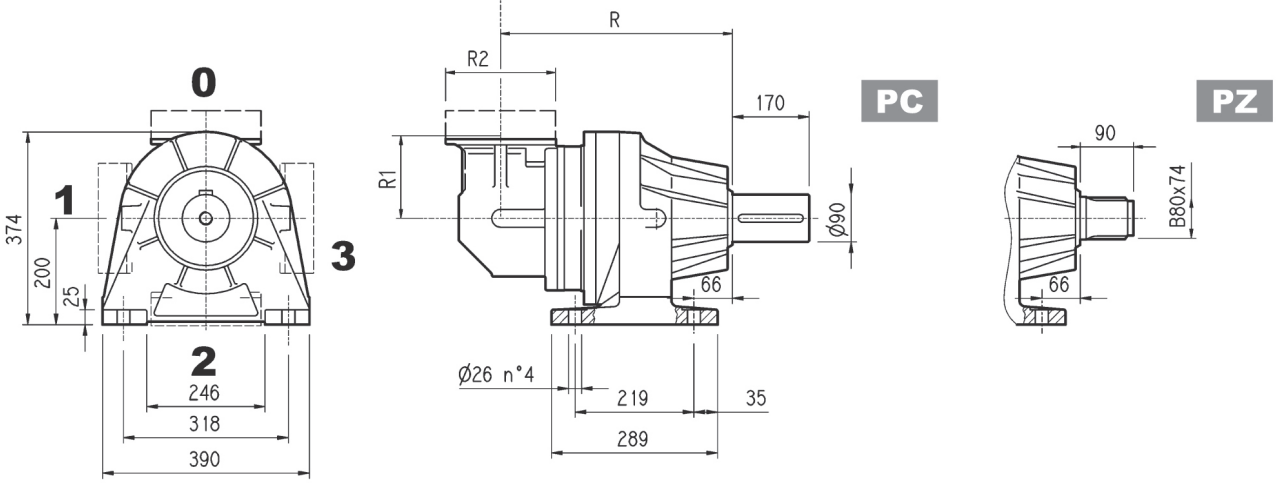

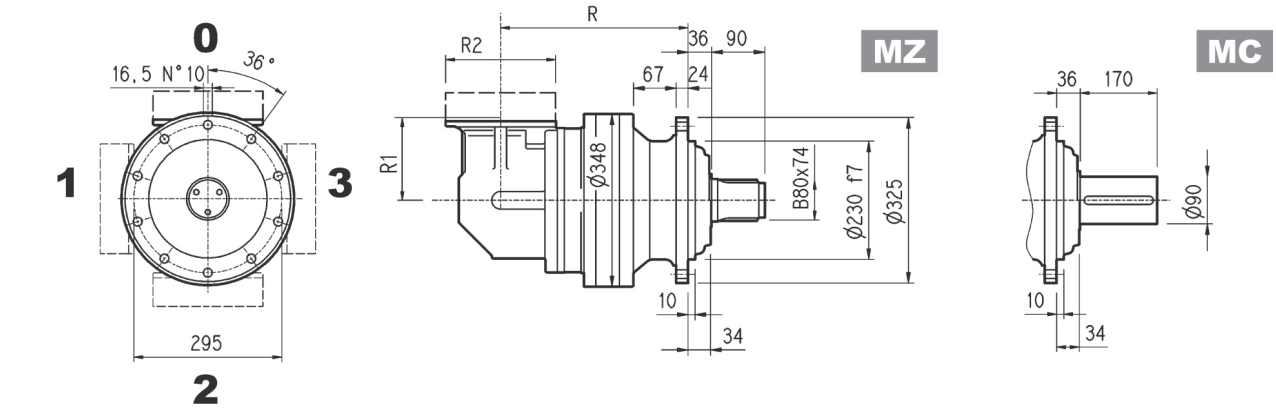

	R				R1	R2	Kg			
	MC - MZ	PC - PZ	HC - HZ	FP - FZ - FDK			MC - MZ	PC - PZ	HC - HZ	FP - FZ - FDK
307 R2	284	365	329	284	225	245	135	170	155	135
307 R3	346	427	391	346	140	186	117	152	137	117
307 R4	411	492	456	411	122	186	118	153	138	118

	V	V1	Kg	V	V1	Kg	V	V1	Kg	V	V1	Kg	C	Input	I	F	F1	F2	Type	Input	Kg
307 R2	239	48	15	—	—	—	276	48	17	—	—	—	37	A		145	95	1/4 G	5	A	16
307 R3	137.5	24	6	158	38	7	—	—	—	—	—	—	37	A		105	65	1/4 G	4	A	10
307 R4	137.5	24	6	158	38	7	—	—	—	—	—	—	37	A	461	105	65	1/4 G	4	A	10

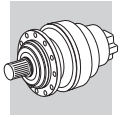

307 R

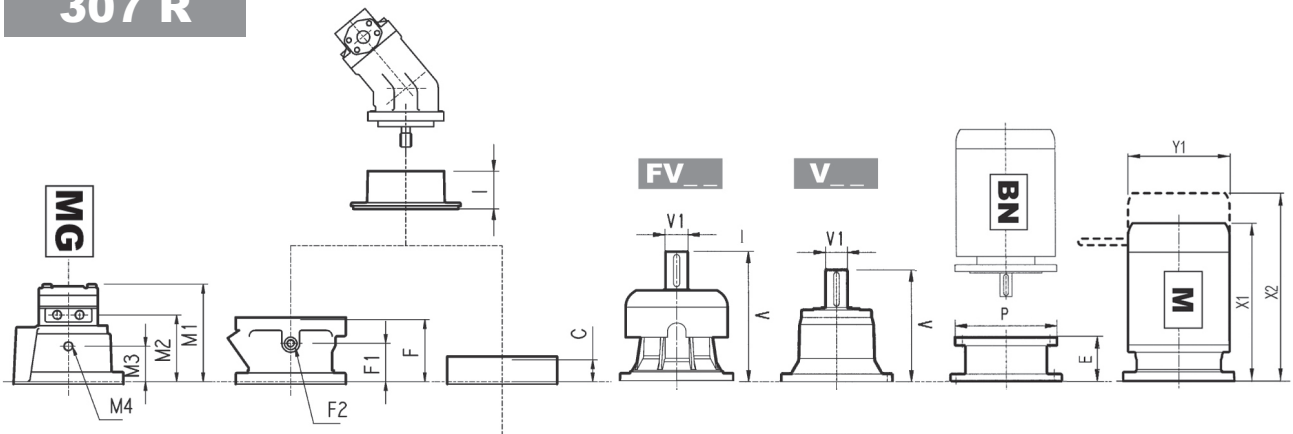

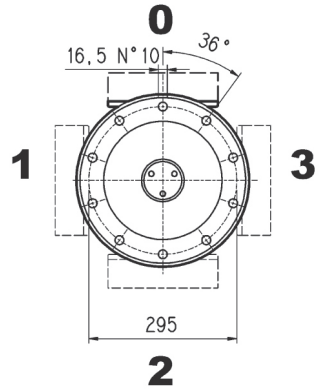

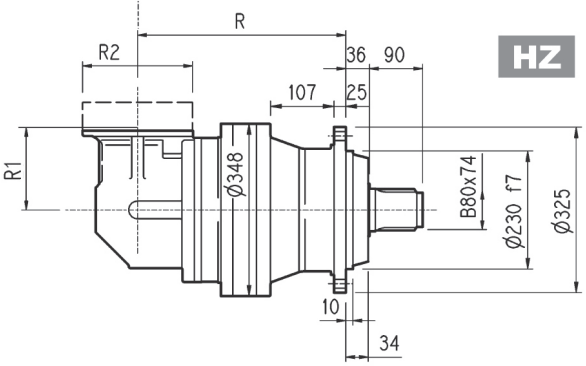

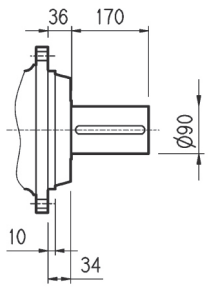

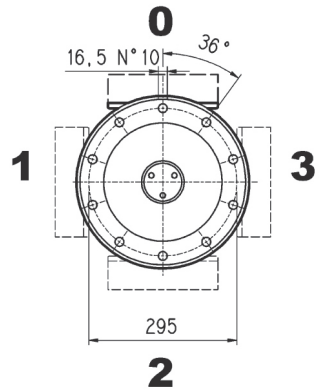

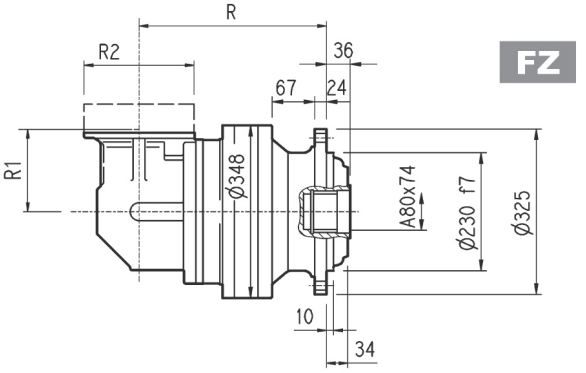

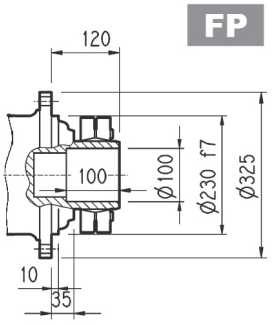

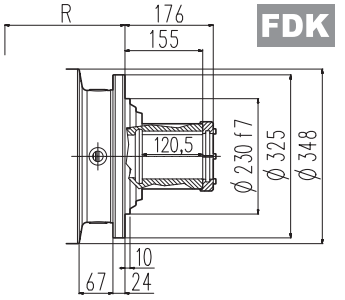

FP	M_{2max} = 18200 Nm

	P71		P80		P90		P100		P112		P132		P160		P180		P200	
	E	P	E	P	E	P	E	P	E	P	E	P	E	P	E	P	E	P
307 R2	—	—	—	—	—	—	—	—	—	—	114	300	144	350	144	350	174	400
307 R3	65	160	84	200	84	200	94	250	94	250	114	300	144	350	—	—	—	—
307 R4	65	160	84	200	84	200	94	250	94	250	114	300	144	350	—	—	—	—

	S1 + M1			S2 + M2S			S3 + M3S			S3 + M3L			S4 + M4			S5 + M5S			S5 + M5L		
	X1	X2	Y1	X1	X2	Y1	X1	X2	Y1	X1	X2	Y1	X1	X2	Y1	X1	X2	Y1	X1	X2	Y1
307 R2	—	—	—	—	—	—	—	—	—	—	—	—	508	619	258	552	692	310	596	736	310
307 R3	253	314	138	328	400	156	373	469	195	405	497	195	508	619	258	—	—	—	—	—	—
307 R4	253	314	138	328	400	156	373	469	195	405	497	195	508	619	258	—	—	—	—	—	—

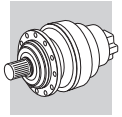

3/V 07 L3

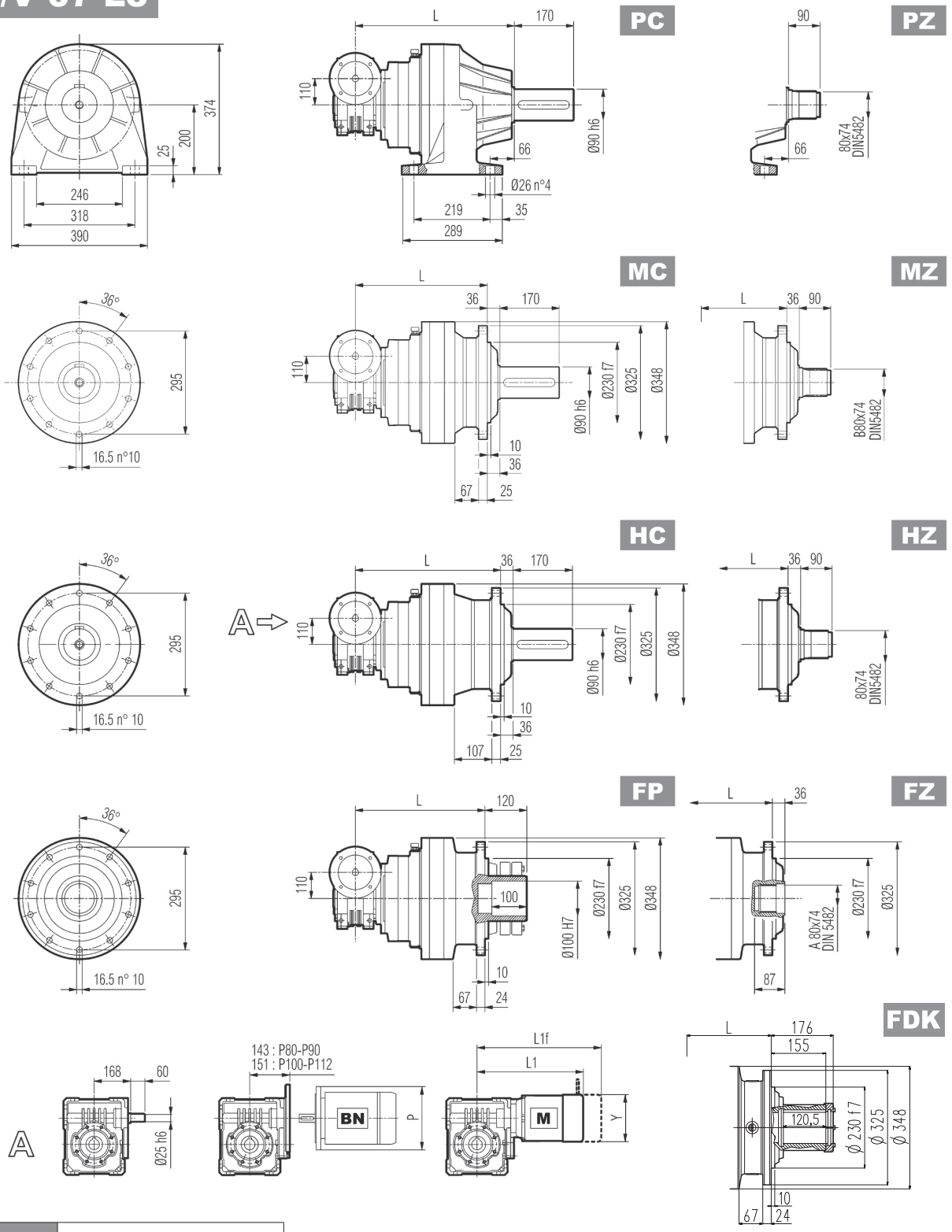

FP | M_{2max} = 18200 Nm

	L				Kg				P80	P90	P100	P112
	MC - MZ	PC - PZ	HC - HZ	FP - FZ - FDK	MC - MZ	PC - PZ	HC - HZ	FP - FZ - FDK	P	P	P	P
3/V 07 L3	414	495	459	414	130	165	150	130	200	200	250	250

	S2 + M2S			S3 + M3S			S3 + M3L		
	L1	L1f	Y	L1	L1f	Y	L1	L1f	Y
3/V 07 L3	364	440	156	407	503	193	439	530	193

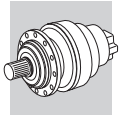

3/A 07 L2

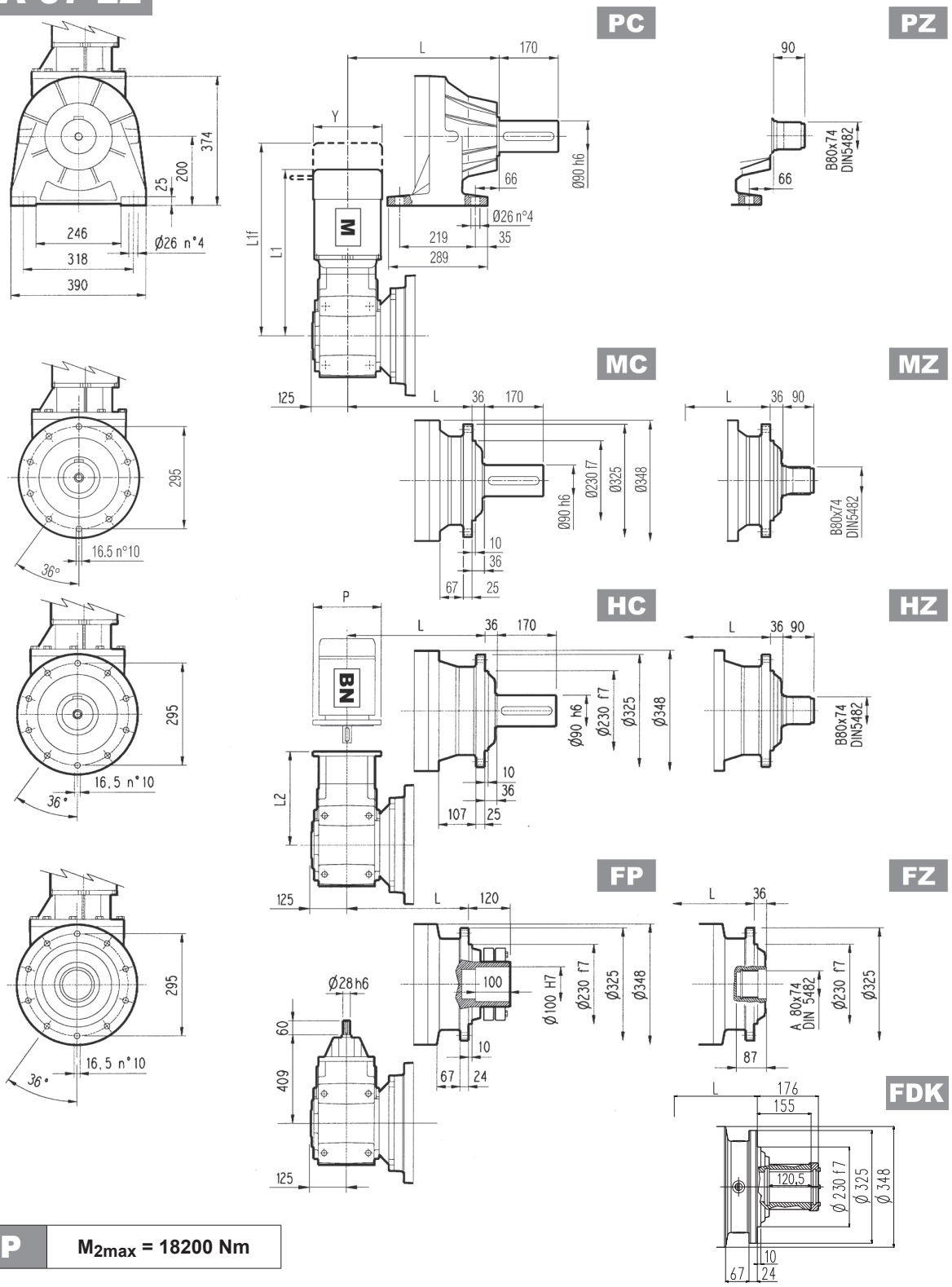

FP	M_{2max} = 18200 Nm

	L				Kg			
	MC - MZ	PC - PZ	HC - HZ	FP - FZ - FDK	MC - MZ	PC - PZ	HC - HZ	FP - FZ - FDK
3/A 07 L2	336	417	381	336	200	230	210	200

	P80		P90		P100		P112		P132		P160		P180	
	L2	P	L2	P	L2	P	L2	P	L2	P	L2	P	L2	P
3/A 07 L2	371	200	371	200	381	250	381	250	416.5	300	468	350	468	350

	S2 + M2S			S3 + M3SA			S3 + M3LA			S4 + M4			S5 + M5S			S5 + M5L		
	L1	L1f	Y	L1	L1f	Y	L1	L1f	Y	L1	L1f	Y	L1	L1f	Y	L1	L1f	Y
3/A 07 L2	535	605	156	578.5	674.5	195	610.5	701.5	195	718.5	827.5	258	970	1110	—	1014	1154	—

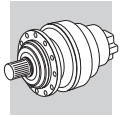

307 L | 307 R | 3/V 07 L3 | 3/A 07 L2

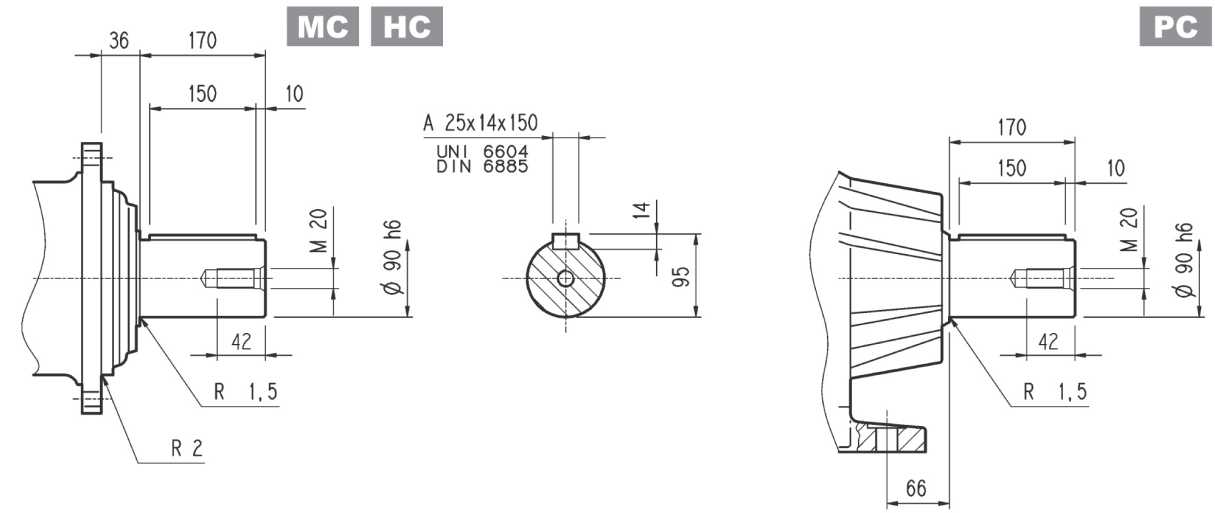

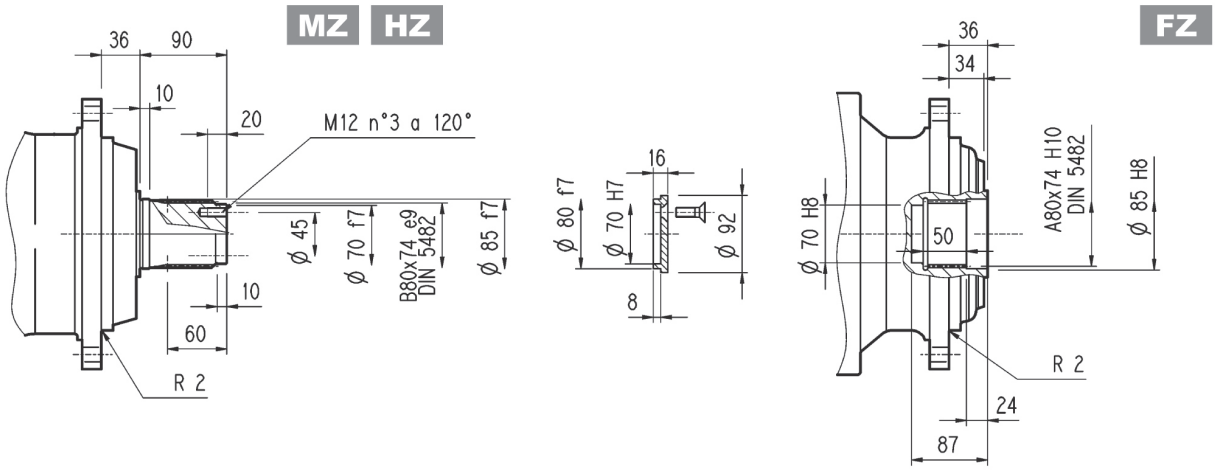

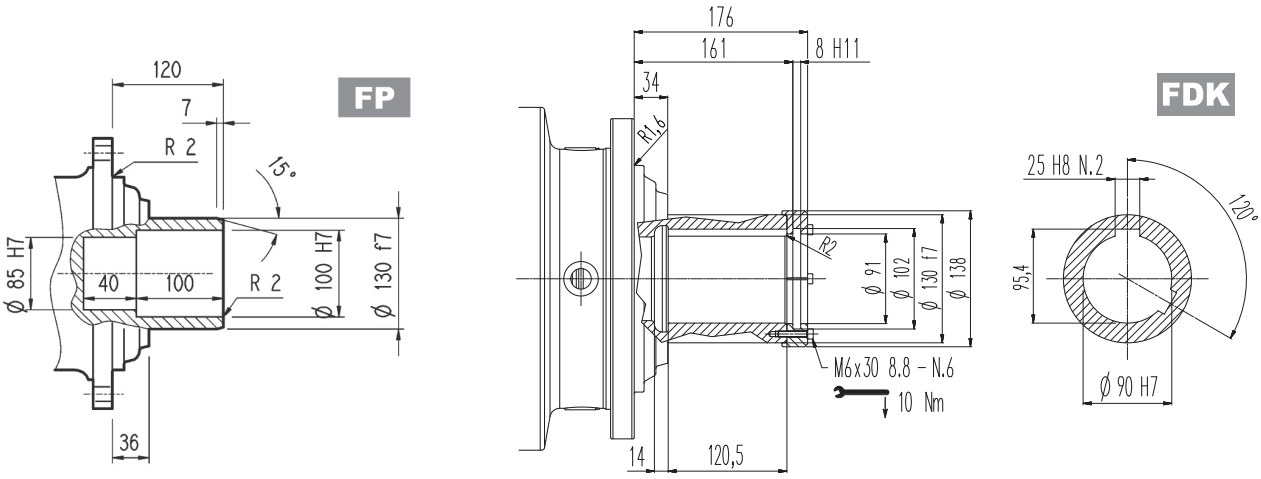

FP	M_{2max} = 18200 Nm

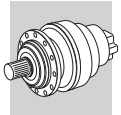

307 L | 307 R | 3/V 07 L3 | 3/A 07 L2

Flangia

W0A

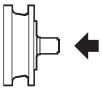

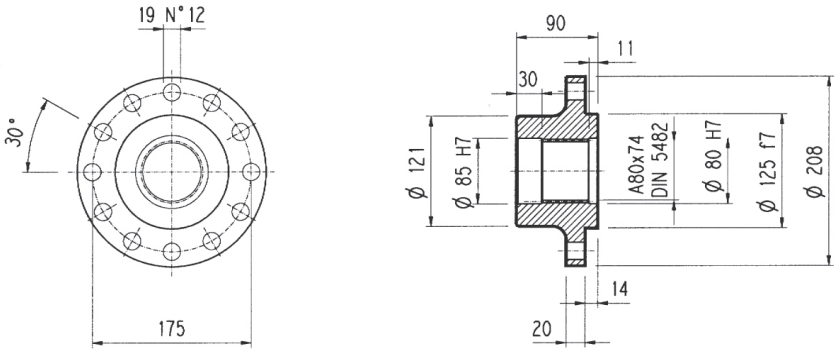

Materiale: Acciaio C40

Pignoni

P...

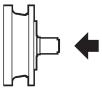

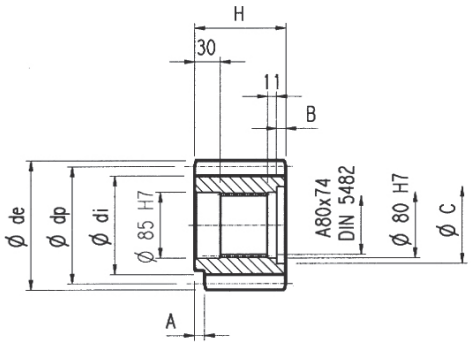

α = 20°

	m	z	x	dp	di	de	H	A	B	C	Materiale
PFG	8	16	0.500	128	117	149.5	90	—	—	—	Acciaio 39NiCrMo3 Bonificato
PHC	10	12	0.450	120	104	145	90	—	—	—	
PHE	10	14	0.320	140	121	165	116	13	26	95	
PHF	10	15	0.150	150	130	171.5	107	20	17	100	
PHG	10	16	0.500	160	145	186	90	—	—	—	Acciaio 18NiCrMo5 Cementato e temprato
PHH1	10	17	—	170	145	189	90	—	—	—	
PHH2	10	17	0.500	170	154	198	90	—	—	—	
PLD	12	13	0.500	156	138	192	102	—	12	95	Acciaio 39NiCrMo3 Bonificato
PLE	12	14	0.500	168	150	199.2	90	—	—	—	
PLI	12	18	0.500	216	198	249.6	107	7	17	95	
PLT	12	26	—	312	282	336	90	10	—	—	Acciaio 18NiCrMo5 Cementato e temprato

Manicotti lisci

M0A

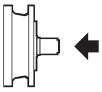

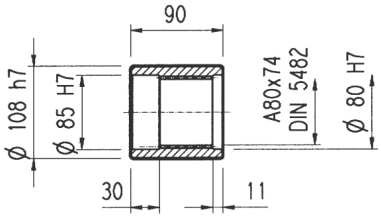

Materiale: Acciaio 16CrNi4

Barre scanalate

B0A

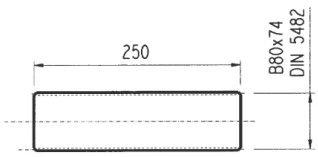

Materiale: Acciaio 18NiCrMo5 UNI 5331
da cementare e temprare 50-55 HRC

Giunto ad attrito

G0A

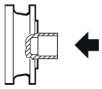

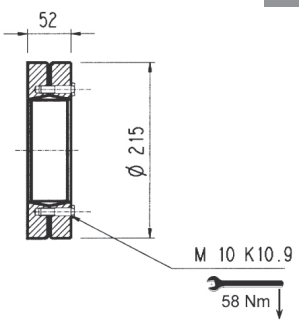

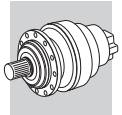

307 L 307 R

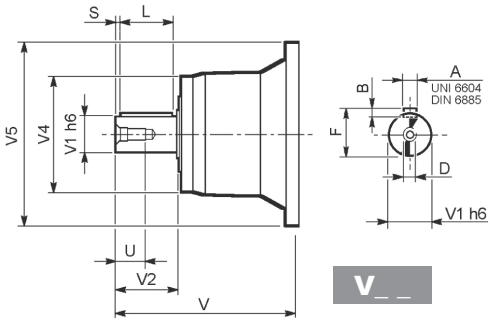

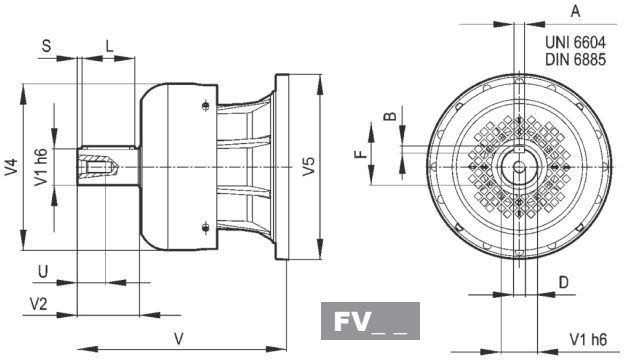

		V	V1	V2	V4	V5	A	B	F	L	S	D	U
307 L1	V07B	315	80	130	200	345	22	14	85	110	10	M16	36
	FV07B	375	80	130	347.5	348	22	14	85	110	10	M16	36
	V07A	313	60	105	155	345	18	11	64	90	7.5	M16	36
	FV07A	363	60	105	309	348	18	11	64	90	7.5	M16	36
307 L2	V05B	239	48	82	155	245	14	9	51.5	70	6	M16	36
	FV05B	276	48	82	219.5	244	14	9	51.5	70	6	M16	36
307 L3	V01A	137.5	24	36	120	186	8	7	27	30	3	M8	19
	V01B	158	38	58	120	186	10	8	41	50	4	M12	28
307 L4	V01A	137.5	24	36	120	186	8	7	27	30	3	M8	19
	V01B	158	38	58	120	186	10	8	41	50	4	M12	28
307 R2	V05B	239	48	82	155	245	14	9	51.5	70	6	M16	36
	FV05B	276	48	82	219.5	244	14	9	51.5	70	6	M16	36
307 R3-R4	V01A	137.5	24	36	120	186	8	7	27	30	3	M8	19
	V01B	158	38	58	120	186	10	8	41	50	4	M12	28

307 L 307 R

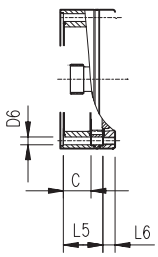

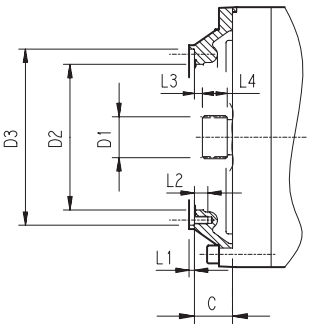

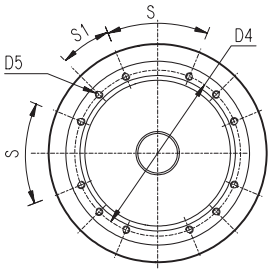

		C	D1	D2	D3	D4	D5	D6	L1	L2	L3	L4	L5	L6	S	S1	Input
307 L1	V9AB	51	58x53 DIN 5482	195	236 H7	222	M10 n°12	—	4	18	11	22	—	—	45°	22.5°	B
307 L2	V9AA	37	40x36 DIN 5482	140	178 H7	165	M10 n°8	—	4	18	9	18	—	—	45°	45°	A
307 L3	V9AA	37	40x36 DIN 5482	140	178 H7	165	M10 n°8	11	4	—	9	18	65	18	45°	45°	A
307 L4	V9AA	37	40x36 DIN 5482	140	178 H7	165	M10 n°8	11	4	—	9	18	118	18	45°	45°	A
307 R2	V9AA	37	40x36 DIN 5482	140	178 H7	165	M10 n°8	11	4	18	9	18	—	—	45°	45°	A
307 R3-R4	V9AA	37	40x36 DIN 5482	140	178 H7	165	M10 n°8	11	4	—	9	18	37	18	45°	45°	A

3/V 07 L3

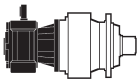

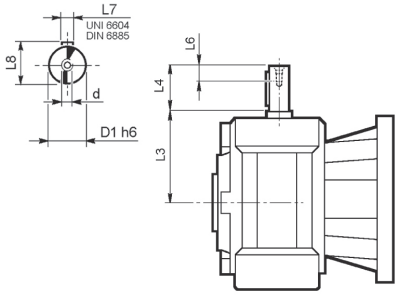

	D1 h6	L3	L4	L6	L7	L8	d
3/V 07 L3_HS	25	168	60	19	8	28	M8

3/A 07 L2

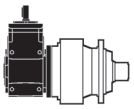

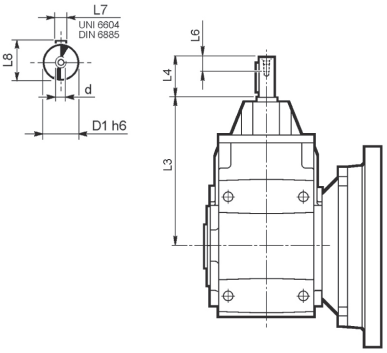

	D1 h6	L3	L4	L6	L7	L8	d
3/A 07 L2_HS	28	409	60	22	8	31	M10

Carichi radiali ed assiali ammissibili sull'albero lento per un valore di $Fh_2 : n_2 \cdot h = 100000$

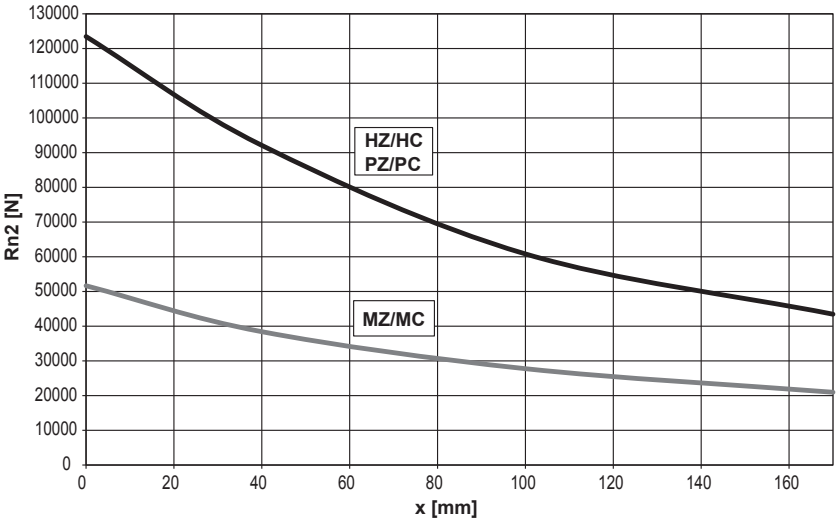

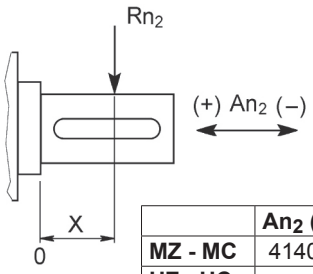

	An_2 (+)	An_2 (-)
MZ - MC	41400	23000
HZ - HC PZ - PC	80000	40000

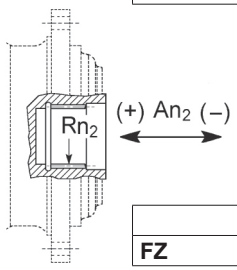

	Rn_2	An_2 (+/-)
FZ	20887	20887

Fattore fh_2 correttivo per carichi sugli alberi	$Fh_2 = n_2 \cdot h$		10000	25000	50000	100000	500000	1000000
	fh_2	FZ	**2.15**	**1.59**	**1.26**	**1.00**	**0.58**	**0.46**
		MZ - MC	**2.15**	**1.59**	**1.26**	**1.00**	**0.58**	**0.46**
		HZ - HC - PZ - PC	**1.49**	**1.49**	**1.23**	**1.00**	**0.62**	**0.50**

Carichi radiali ammissibili sull'albero veloce per un valore di $Fh_1 : n_1 \cdot h = 250000$

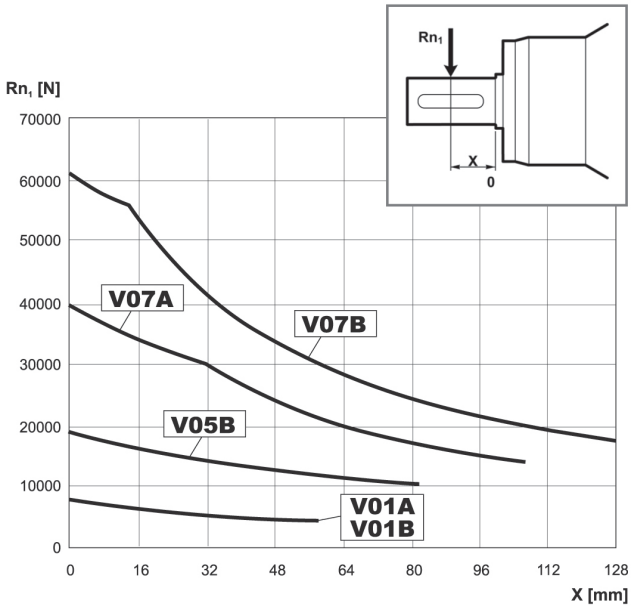

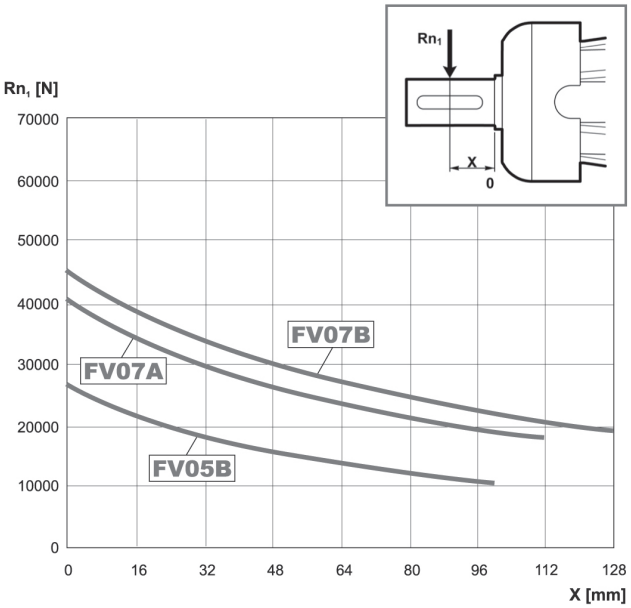

Fattore fh_1 correttivo per carichi sugli alberi	$Fh_1 = n_1 \cdot h$	250000	500000	1000000	2000000	5000000	10000000
	fh_1	**1**	**0.79**	**0.63**	**0.50**	**0.37**	**0.29**

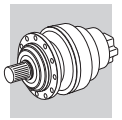

307 VK

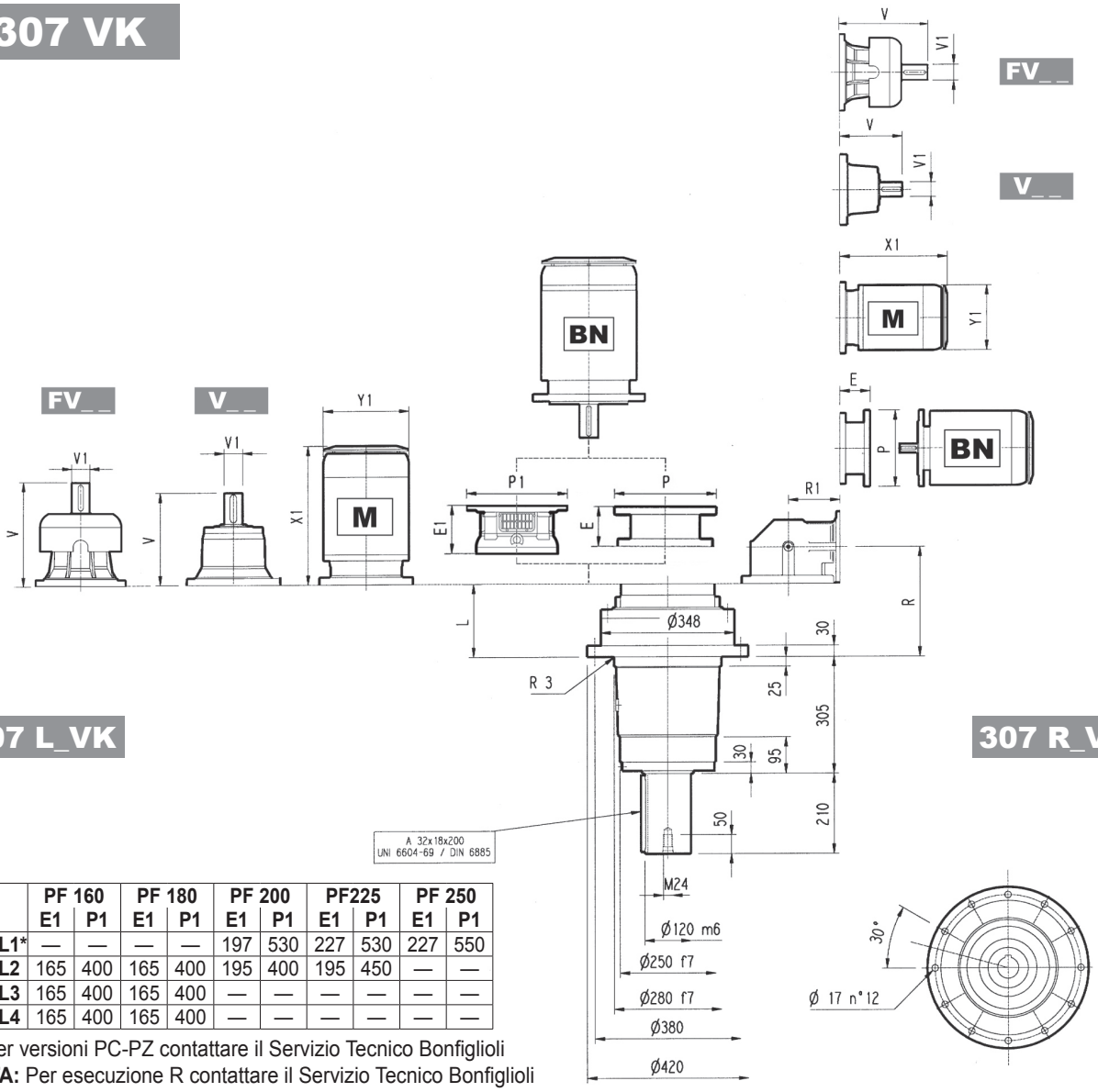

307 L_VK

307 R_VK

	PF 160		PF 180		PF 200		PF225		PF 250	
	E1	P1	E1	P1	E1	P1	E1	P1	E1	P1
307 L1*	—	—	—	—	197	530	227	530	227	550
307 L2	165	400	165	400	195	400	195	450	—	—
307 L3	165	400	165	400	—	—	—	—	—	—
307 L4	165	400	165	400	—	—	—	—	—	—

(*) per versioni PC-PZ contattare il Servizio Tecnico Bonfiglioli
NOTA: Per esecuzione R contattare il Servizio Tecnico Bonfiglioli

	L	Kg	V	V1	Kg	V	V1	Kg	V	V1	Kg	V	V1	Kg	P71		P80		P90		P100		P112		P132		P160		P180		P200		P225		P250	
															E	P	E	P	E	P	E	P	E	P	E	P	E	P	E	P	E	P	E	P	E	P
307 L1	80	145	315	80	35	313	60	28	375	80	48	363	60	34	—	—	—	—	—	—	—	—	—	—	—	—	—	—	195	350	186	400	216	450	215	550
307 L2	169	160	239	48	15	—	—	—	276	48	17	—	—	—	—	—	—	—	—	—	—	—	—	—	114	300	144	350	144	350	174	400	—	—	—	—
307 L3	234	170	137.5	24	6	158	38	7	—	—	—	—	—	—	65	160	84	200	84	200	94	250	94	250	114	300	144	350	—	—	—	—	—	—	—	—
307 L4	287	175	137.5	24	6	158	38	7	—	—	—	—	—	—	65	160	84	200	84	200	94	250	94	250	114	300	144	350	—	—	—	—	—	—	—	—

	S1 + M1			S2 + M2S			S3 + M3S			S3 + M3L			S4 + M4			S5 + M5S			S5 + M5L		
	X1	X2	Y1	X1	X2	Y1	X1	X2	Y1	X1	X2	Y1	X1	X2	Y1	X1	X2	Y1	X1	X2	Y1
307 L1	—	—	—	—	—	—	—	—	—	—	—	—	—	—	—	—	—	—	—	—	—
307 L2	—	—	—	—	—	—	—	—	—	—	—	—	460	571	258	552	692	310	596	736	310
307 L3	—	—	—	280	352	156	325	421	195	357	449	195	460	571	258	—	—	—	—	—	—
307 L4	253	314	138	280	352	156	325	421	195	357	449	195	460	571	258	—	—	—	—	—	—

	R	R1	Kg	V	V1	Kg	V	V1	Kg	V	V1	Kg	V	V1	Kg	P71		P80		P90		P100		P112		P132		P160		P180		P200	
																E	P	E	P	E	P	E	P	E	P	E	P	E	P	E	P	E	P
307 R2	199	225	180	239	48	15	—	—	—	276	48	17	—	—	—	—	—	—	—	—	—	—	—	—	—	114	300	144	350	144	350	174	400
307 R3	261	140	170	137.5	24	6	158	38	7	—	—	—	—	—	—	65	160	84	200	84	200	94	250	94	250	114	300	144	350	—	—	—	—
307 R4	326	122	175	137.5	24	6	158	38	7	—	—	—	—	—	—	65	160	84	200	84	200	94	250	94	250	114	300	144	350	—	—	—	—

	S1 + M1			S2 + M2S			S3 + M3S			S3 + M3L			S4 + M4			S5 + M5S			S5 + M5L		
	X1	X2	Y1	X1	X2	Y1	X1	X2	Y1	X1	X2	Y1	X1	X2	Y1	X1	X2	Y1	X1	X2	Y1
307 R2	—	—	—	—	—	—	—	—	—	—	—	—	508	619	258	552	692	310	596	736	310
307 R3	253	314	138	328	400	156	373	469	195	405	497	195	508	619	258	—	—	—	—	—	—
307 R4	253	314	138	328	400	156	373	469	195	405	497	195	508	619	258	—	—	—	—	—	—

307 VK

Il diagramma seguente consente di ricavare il carico radiale ammissibile R_{x2} quando questo è applicato alla distanza x dallo spallamento dell'albero lento del riduttore.
Le curve si riferiscono al valore risultante dal rapporto fra il carico assiale A_{n2} e il carico radiale R_{n2}, entrambi riferiti a n_2 = 10 min^{-1} e durata teorica di 10000 h.

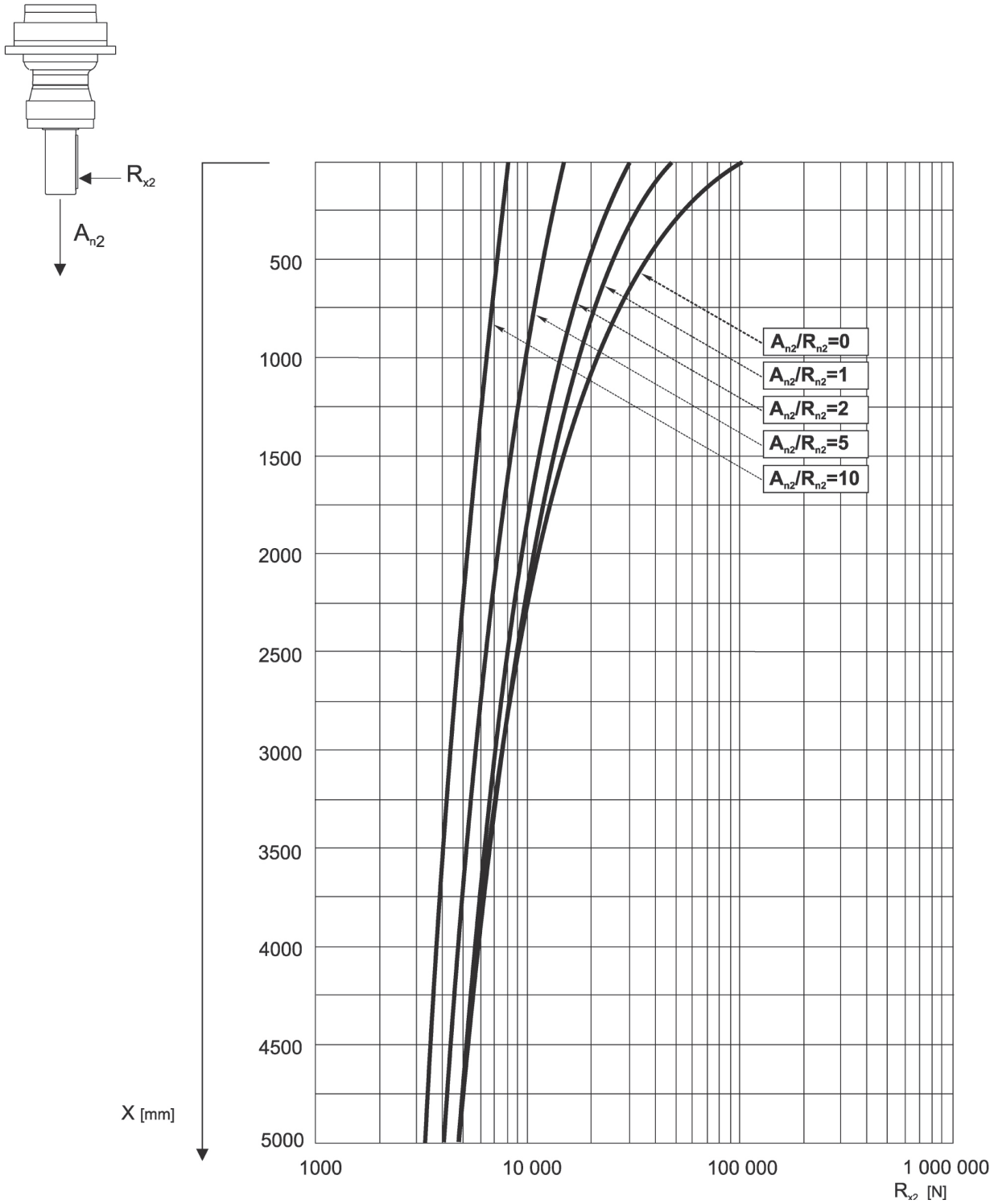

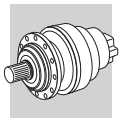

309 L

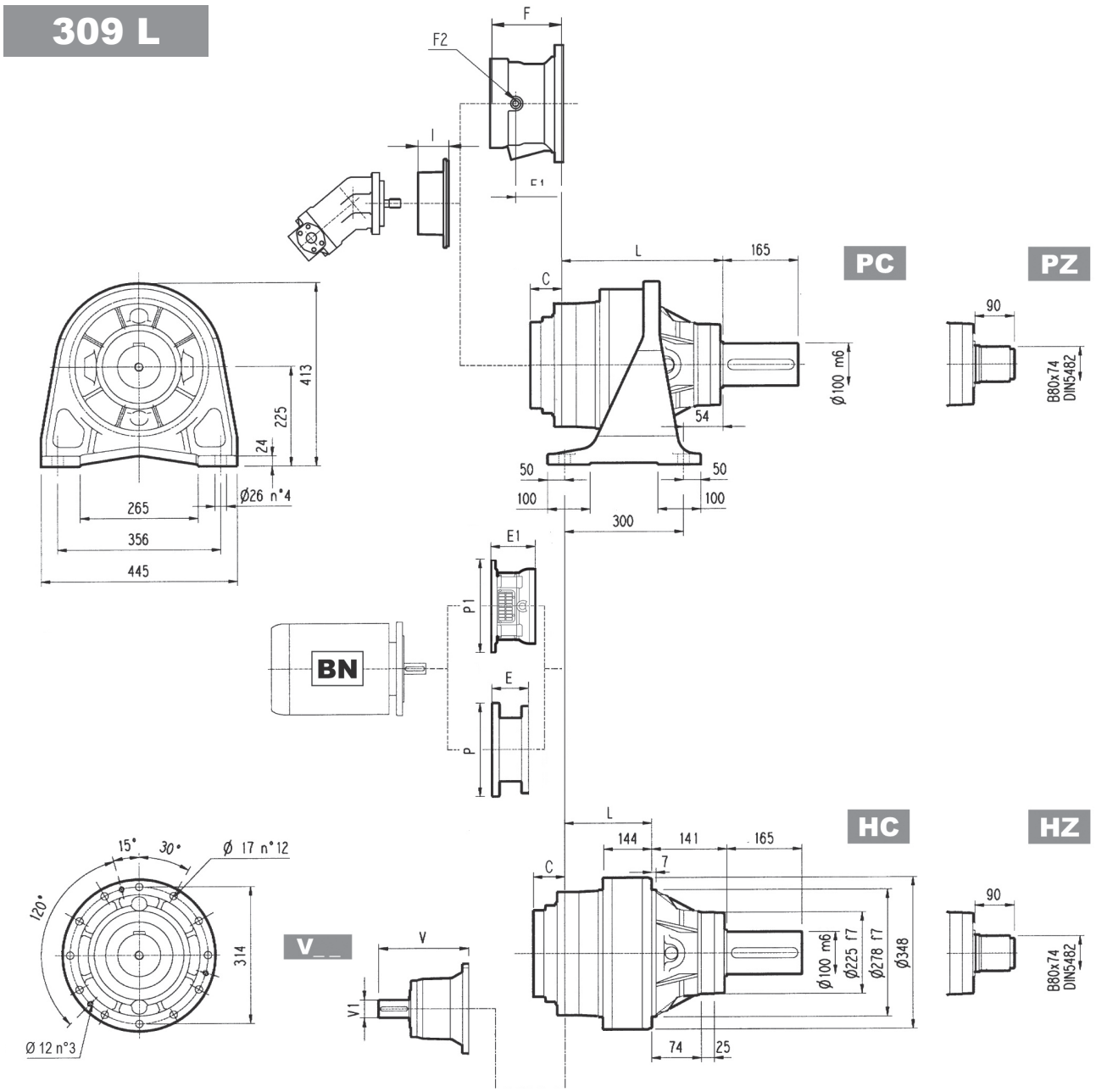

	L				Kg			
	PC - PZ	HC - HZ	FZ	FP - FDK	PC - PZ	HC - HZ	FZ	FP - FDK
309 L1	267	126	99	101	130	115	95	100
309 L2	356	215	188	190	142	127	107	112
309 L3	421	280	253	255	149	134	114	119
309 L4	474	333	306	308	153	138	118	123

	V	V1	Kg	V	V1	Kg	V	V1	Kg	V	V1	Kg	C	Input	I	F	F1	F2	Type	Input	Kg
309 L1	315	80	35	313	60	28	375	80	48	363	60	34	51	B		201	153	1/4 G	6	B	28
309 L2	239	48	15	—	—	—	276	48	17	—	—	—	37	A		145	95	1/4 G	5	A	16
309 L3	137.5	24	6	158	38	7	—	—	—	—	—	—	37	A		105	65	1/4 G	4	A	10
309 L4	137.5	24	6	158	38	7	—	—	—	—	—	—	37	A	461	105	65	1/4 G	4	A	10

309 L

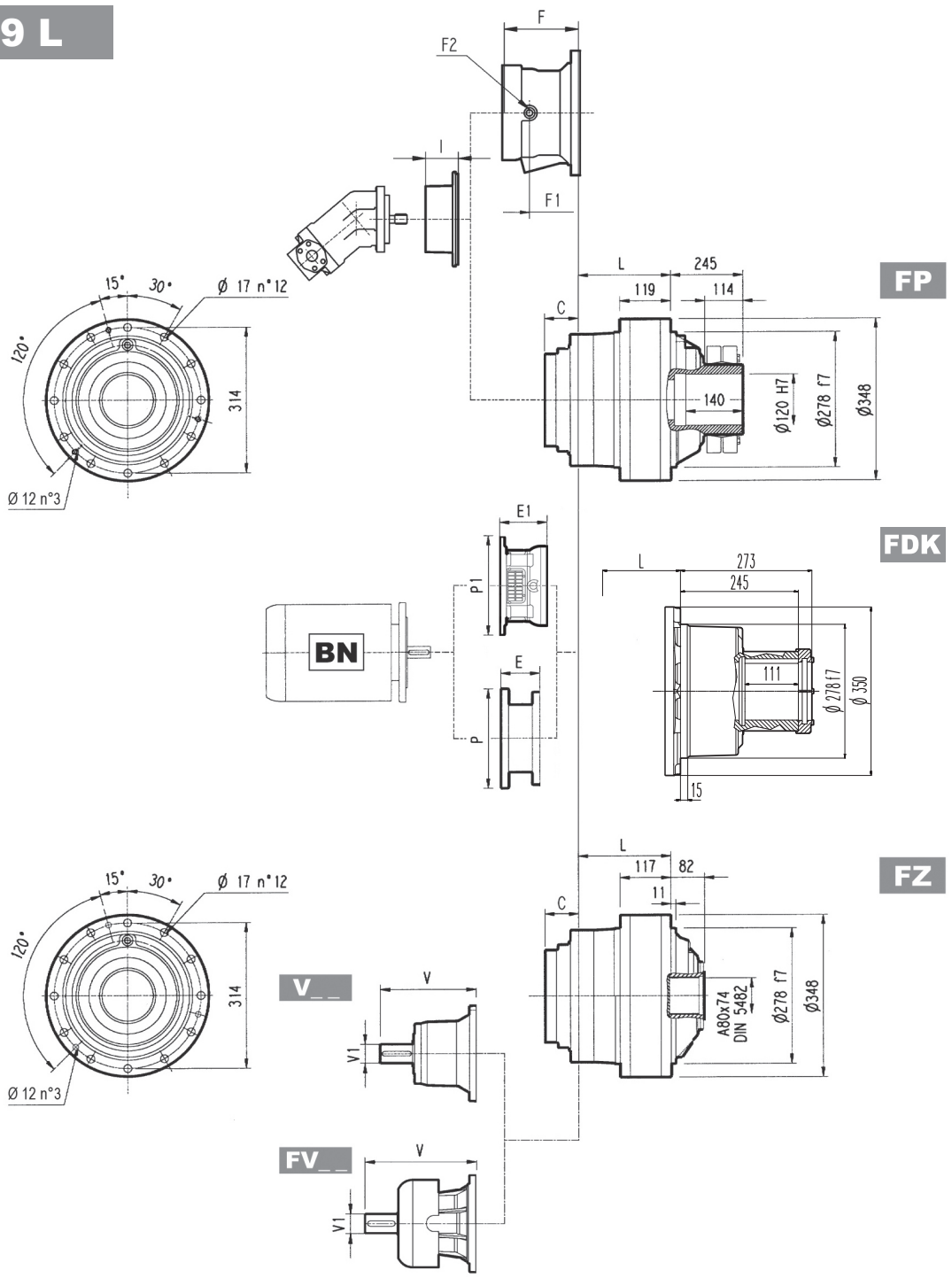

	PF 160		PF 180		PF 200		PF225		PF 250	
	E1	P1	E1	P1	E1	P1	E1	P1	E1	P1
309 L1*	—	—	—	—	197	530	227	530	227	550
309 L2	165	400	165	400	195	400	195	450	—	—
309 L3	165	400	165	400	—	—	—	—	—	—
309 L4	165	400	165	400	—	—	—	—	—	—

(*) per versioni PC-PZ contattare il Servizio Tecnico Bonfiglioli
NOTA: Per esecuzione R contattare il Servizio Tecnico Bonfiglioli

FP | **M_{2max} = 29000 Nm**

	P71		P80		P90		P100		P112		P132		P160		P180		P200		P225		P250	
	E	P	E	P	E	P	E	P	E	P	E	P	E	P	E	P	E	P	E	P	E	P
309 L1	—	—	—	—	—	—	—	—	—	—	—	—	—	—	195	350	186	400	216	450	216	550
309 L2	—	—	—	—	—	—	—	—	—	—	114	300	144	350	144	350	174	400	—	—	—	—
309 L3	65	160	84	200	84	200	94	250	94	250	114	300	144	350	—	—	—	—	—	—	—	—
309 L4	65	160	84	200	84	200	94	250	94	250	114	300	144	350	—	—	—	—	—	—	—	—

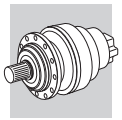

309 R

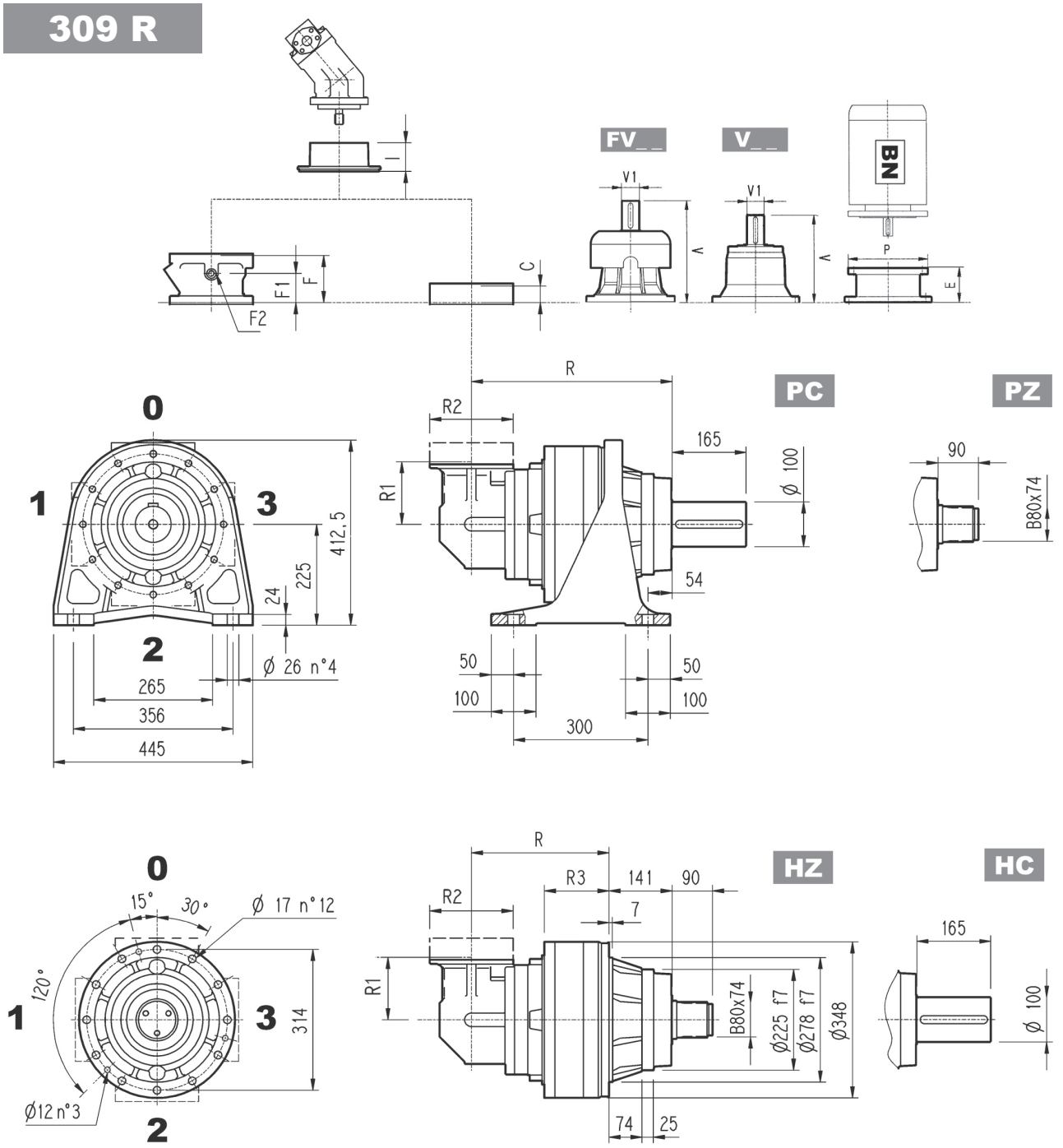

	R				R1	R2	R3			Kg			
	PC-PZ	HC-HZ	FZ	FP - FDK			HC-HZ	FZ	FP	PC-PZ	HC-HZ	FZ	FP - FDK
309 R2	386	245	218	220	225	245	168	141	143	180	165	145	150
309 R3	448	307	280	282	140	186	144	117	119	162	147	127	132
309 R4	513	372	345	347	122	186	144	117	119	163	148	128	133

	V	V1	Kg	V	V1	Kg	V	V1	Kg	V	V1	Kg	C	Input	I	F	F1	F2	Type	Input	Kg
309 R2	239	48	15	—	—	—	276	48	17	—	—	—	37	A		145	95	1/4 G	5	A	16
309 R3	137.5	24	6	158	38	7	—	—	—	—	—	—	37	A		105	65	1/4 G	4	A	10
309 R4	137.5	24	6	158	38	7	—	—	—	—	—	—	37	A	461	105	65	1/4 G	4	A	10

309 R

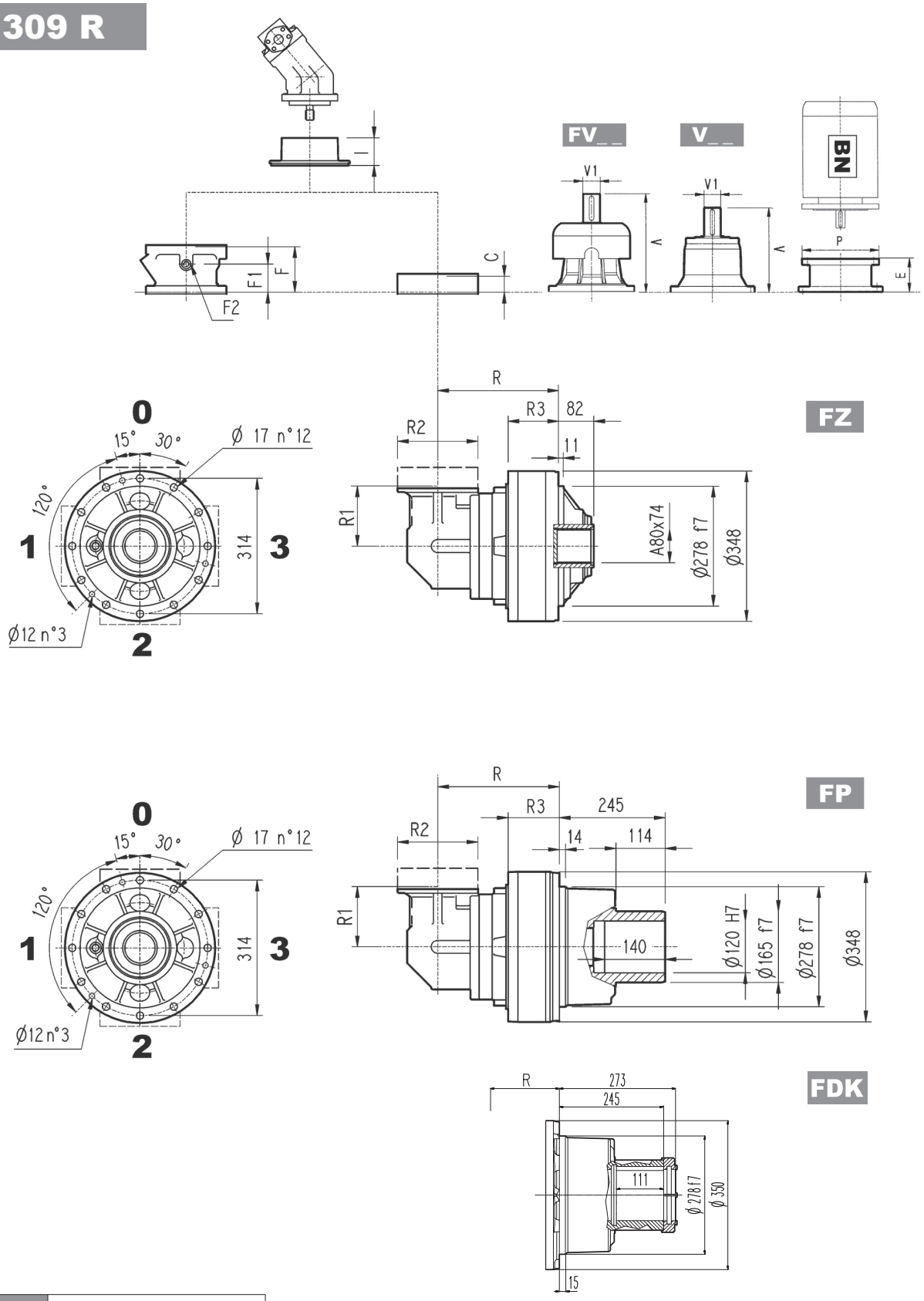

FP	M_{2max} = 29000 Nm

	P71		P80		P90		P100		P112		P132		P160		P180		P200	
	E	P	E	P	E	P	E	P	E	P	E	P	E	P	E	P	E	P
309 R2	—	—	—	—	—	—	—	—	—	—	114	300	144	350	144	350	174	400
309 R3	65	160	84	200	84	200	94	250	94	250	114	300	144	350	—	—	—	—
309 R4	65	160	84	200	84	200	94	250	94	250	114	300	144	350	—	—	—	—

3/V 09 L3

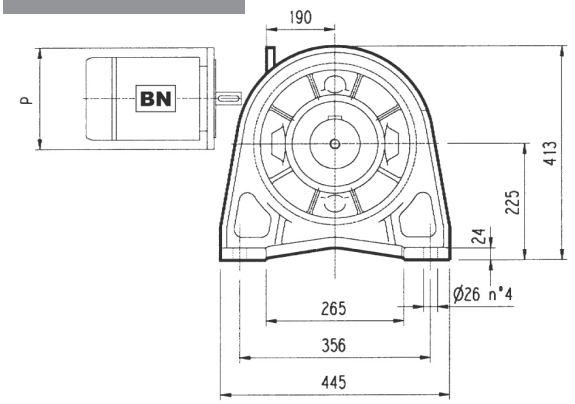

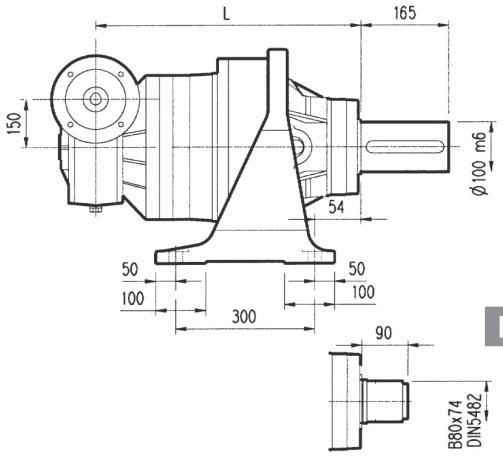

PC

HZ PZ

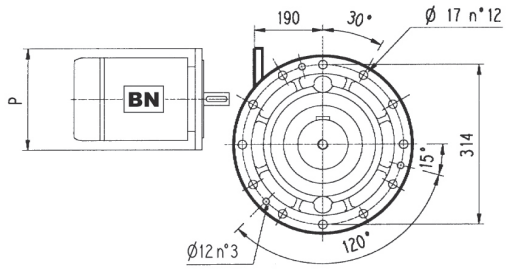

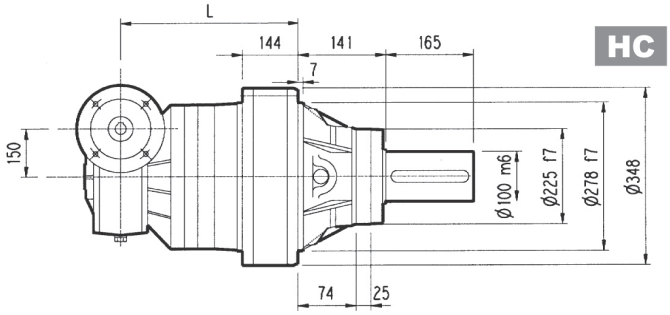

HC

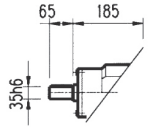

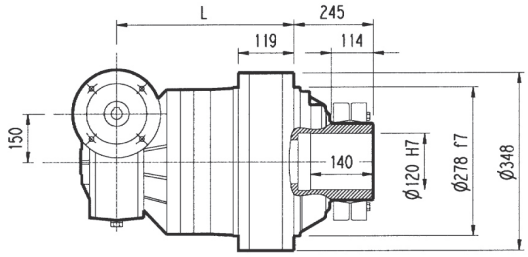

FP

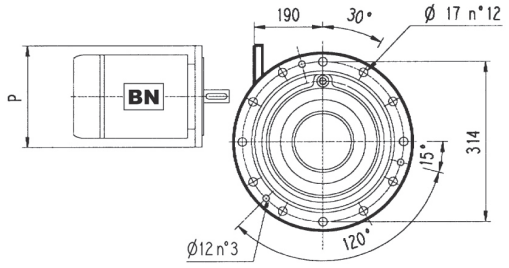

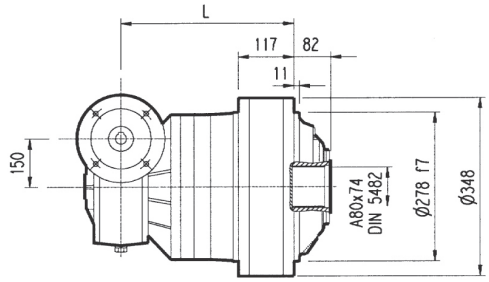

FZ

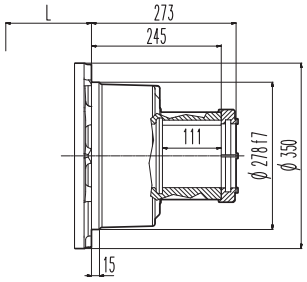

FDK

FP	M_{2max} = 29000 Nm

	L				Kg				P100	P112	P132	P160
	PC - PZ	HC - HZ	FZ	FP - FDK	PC - PZ	HC - HZ	FZ	FP - FDK	P	P	P	P
3/V 09 L3	530	389	362	364	202	187	167	172	250	250	300	350

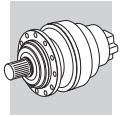

309 L | 309 R | 3/V 09 L3

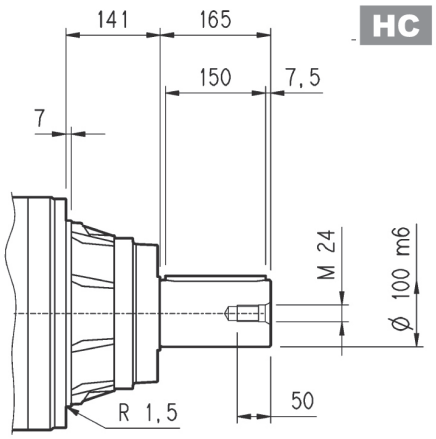

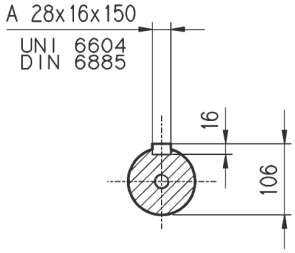

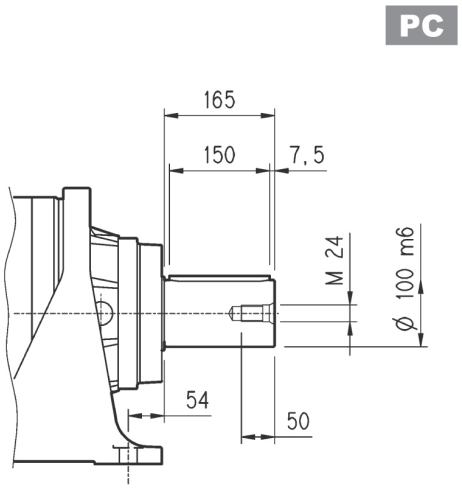

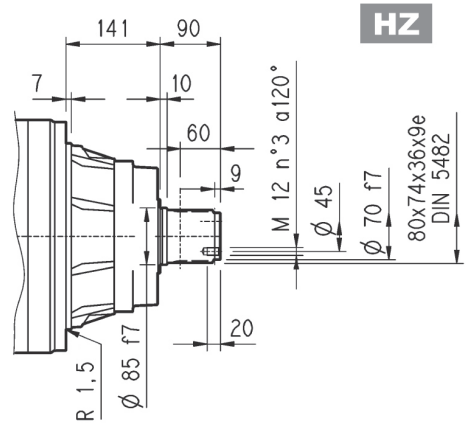

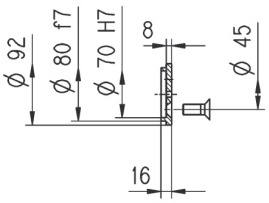

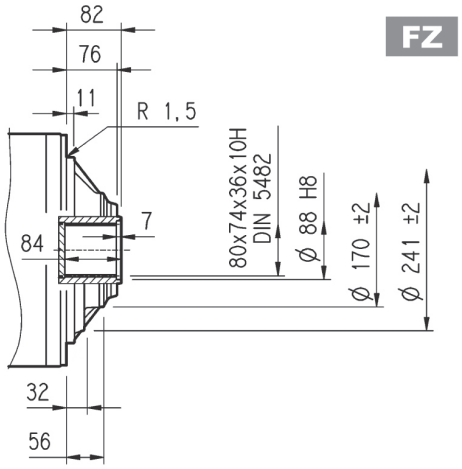

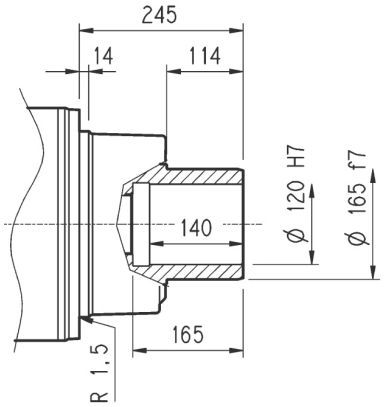

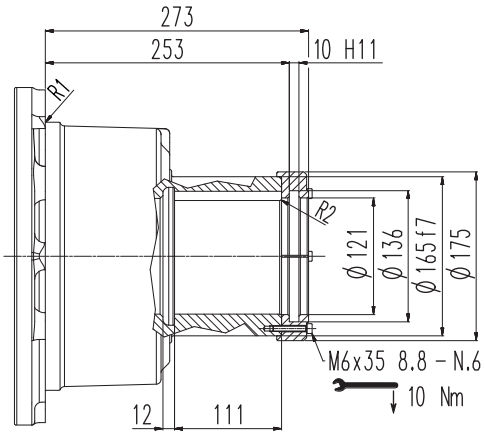

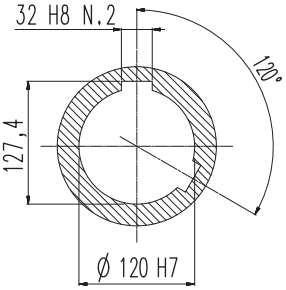

FP	M_{2max} = 29000 Nm

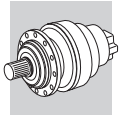

309 L | 309 R | 3/V 09 L3

Flangia

W0A

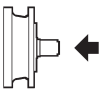

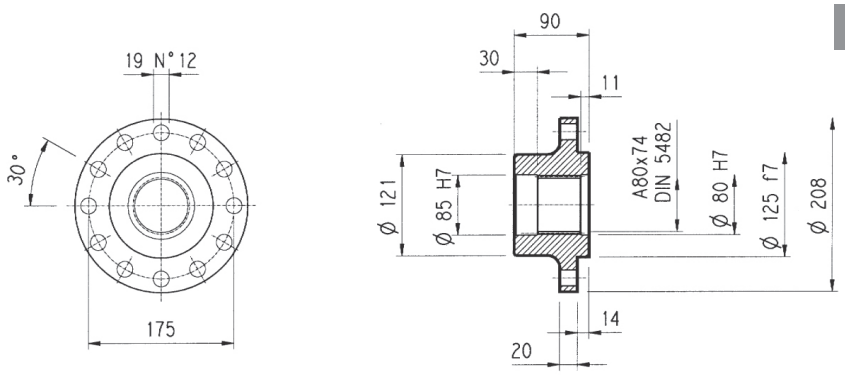

Materiale: Acciaio C40

Pignoni

P...

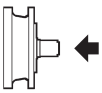

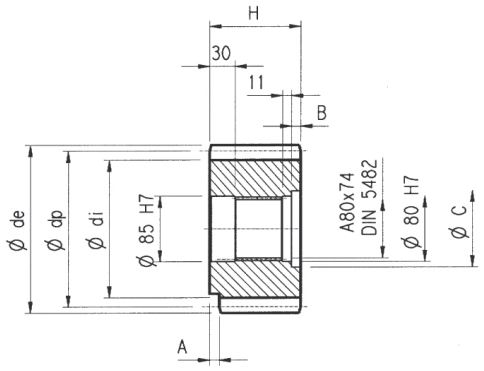

α = 20°

	m	z	x	dp	di	de	H	A	B	C	Materiale
PFG	8	16	0.500	128	117	149.5	90	—	—	—	Acciaio 39NiCrMo3 Bonificato
PHC	10	12	0.450	120	104	145	90	—	—	—	
PHE	10	14	0.320	140	121	165	116	13	26	95	
PHF	10	15	0.150	150	130	171.5	107	20	17	100	
PHG	10	16	0.500	160	145	186	90	—	—	—	Acciaio 18NiCrMo5 Cementato e temprato
PHH1	10	17	—	170	145	189	90	—	—	—	
PHH2	10	17	0.500	170	154	198	90	—	—	—	
PLD	12	13	0.500	156	138	192	102	—	12	95	Acciaio 39NiCrMo3 Bonificato
PLE	12	14	0.500	168	150	199.2	90	—	—	—	
PLI	12	18	0.500	216	198	249.6	107	7	17	95	
PLT	12	26	—	312	282	336	90	10	—	—	Acciaio 18NiCrMo5 Cementato e temprato

Manicotti lisci

M0A

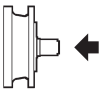

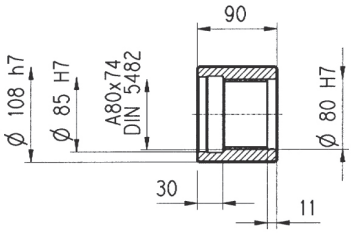

Materiale: Acciaio 16CrNi4

Barre scanalate

B0A

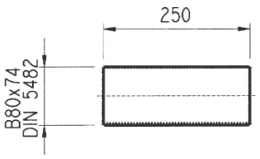

Materiale: Acciaio 18NiCrMo5 UNI 5331
da cementare e temprare 50-55 HRC

Giunto ad attrito

G0A

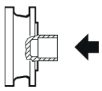

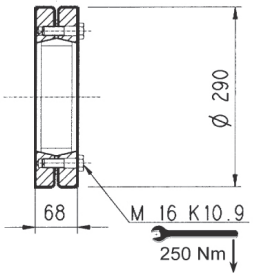

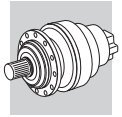

309 L 309 R

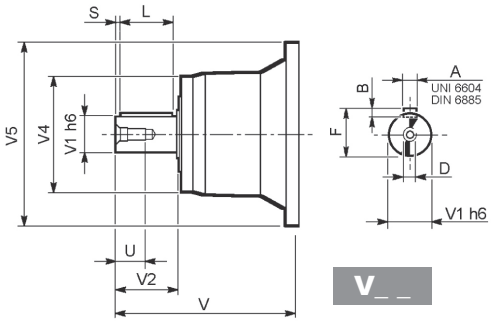

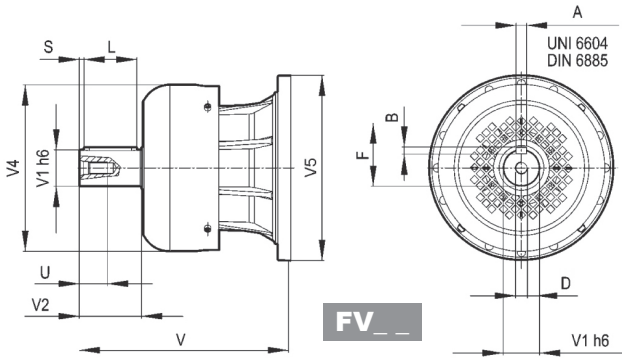

		V	V1	V2	V4	V5	A	B	F	L	S	D	U
309 L1	**V07B**	315	80	130	200	345	22	14	85	110	10	M16	36
	FV07B	375	80	130	347.5	348	22	14	85	110	10	M16	36
	V07A	313	60	105	155	345	18	11	64	90	7.5	M16	36
	FV07A	363	60	105	309	348	18	11	64	90	7.5	M16	36
309 L2	**V05B**	239	48	82	155	245	14	9	51.5	70	6	M16	36
	FV05B	276	48	82	219.5	244	14	9	51.5	70	6	M16	36
309 L3	**V01A**	137.5	24	36	120	186	8	7	27	30	3	M8	19
	V01B	158	38	58	120	186	10	8	41	50	4	M12	28
309 L4	**V01A**	137.5	24	36	120	186	8	7	27	30	3	M8	19
	V01B	158	38	58	120	186	10	8	41	50	4	M12	28
309 R2	**V05B**	239	48	82	155	245	14	9	51.5	70	6	M16	36
	FV05B	276	48	82	219.5	244	14	9	51.5	70	6	M16	36
309 R3-R4	**V01A**	137.5	24	36	120	186	8	7	27	30	3	M8	19
	V01B	158	38	58	120	186	10	8	41	50	4	M12	28

309 L 309 R

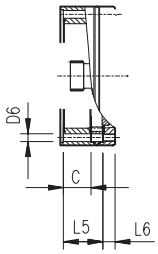

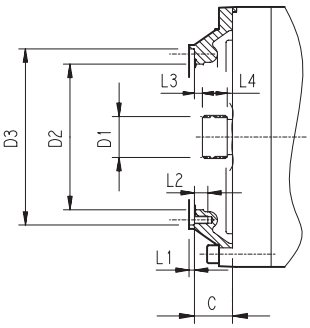

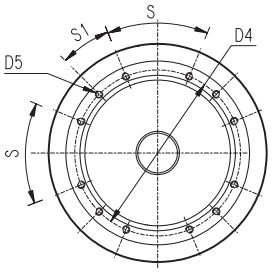

		C	D1	D2	D3	D4	D5	D6	L1	L2	L3	L4	L5	L6	S	S1	Input
309 L1	**V9AB**	51	58x53 DIN 5482	195	236 H7	222	M10 n°12	—	4	18	11	22	—	—	45°	22.5°	B
309 L2	**V9AA**	37	40x36 DIN 5482	140	178 H7	165	M10 n°8	—	4	18	9	18	—	—	45°	45°	A
309 L3	**V9AA**	37	40x36 DIN 5482	140	178 H7	165	M10 n°8	11	4	—	9	18	65	18	45°	45°	A
309 L4	**V9AA**	37	40x36 DIN 5482	140	178 H7	165	M10 n°8	11	4	—	9	18	118	18	45°	45°	A
309 R2	**V9AA**	37	40x36 DIN 5482	140	178 H7	165	M10 n°8	11	4	18	9	18	—	—	45°	45°	A
309 R3-R4	**V9AA**	37	40x36 DIN 5482	140	178 H7	165	M10 n°8	11	4	—	9	18	37	18	45°	45°	A

3/V 09 L3

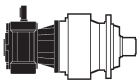

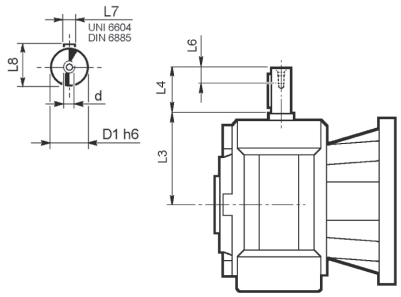

	D1 h6	L3	L4	L6	L7	L8	d
3/V 09 L3_HS	35	185	65	20	10	38	M8

Carichi radiali ed assiali ammissibili sull'albero lento per un valore di $Fh_2 : n_2 \cdot h = 100000$

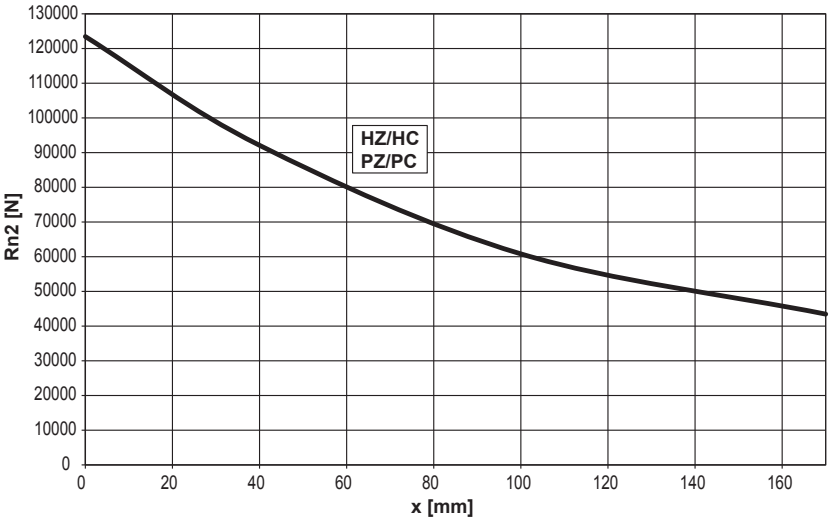

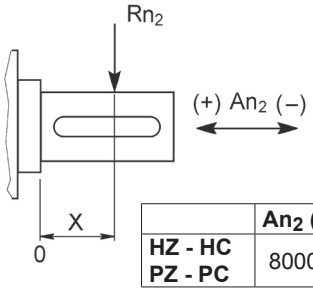

	An_2 (+)	An_2 (-)
HZ - HC PZ - PC	80000	40000

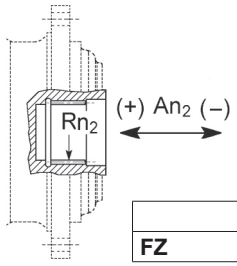

	Rn_2	An_2 (+/-)
FZ	16710	17174

Fattore fh_2 correttivo per carichi sugli alberi	$Fh_2 = n_2 \cdot h$		10000	25000	50000	100000	500000	1000000
	fh_2	FZ	**2.15**	**1.59**	**1.26**	**1.00**	**0.58**	**0.46**
		HZ - HC - PZ - PC	**1.49**	**1.49**	**1.23**	**1.00**	**0.62**	**0.50**

Carichi radiali ammissibili sull'albero veloce per un valore di $Fh_1 : n_1 \cdot h = 250000$

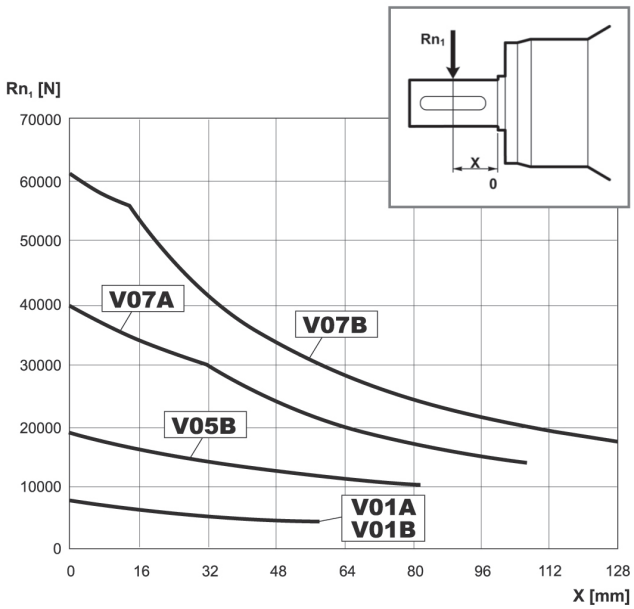

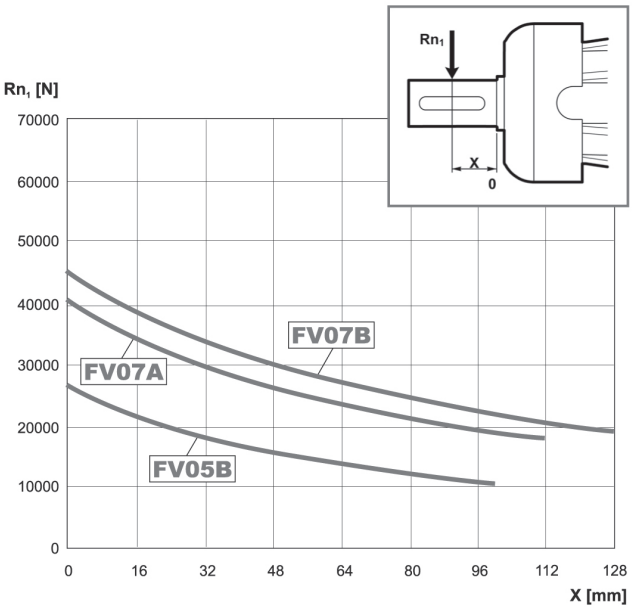

Fattore fh_1 correttivo per carichi sugli alberi	$Fh_1 = n_1 \cdot h$	250000	500000	1000000	2000000	5000000	10000000
	fh_1	**1**	**0.79**	**0.63**	**0.50**	**0.37**	**0.29**

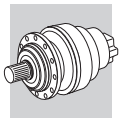

309 VK

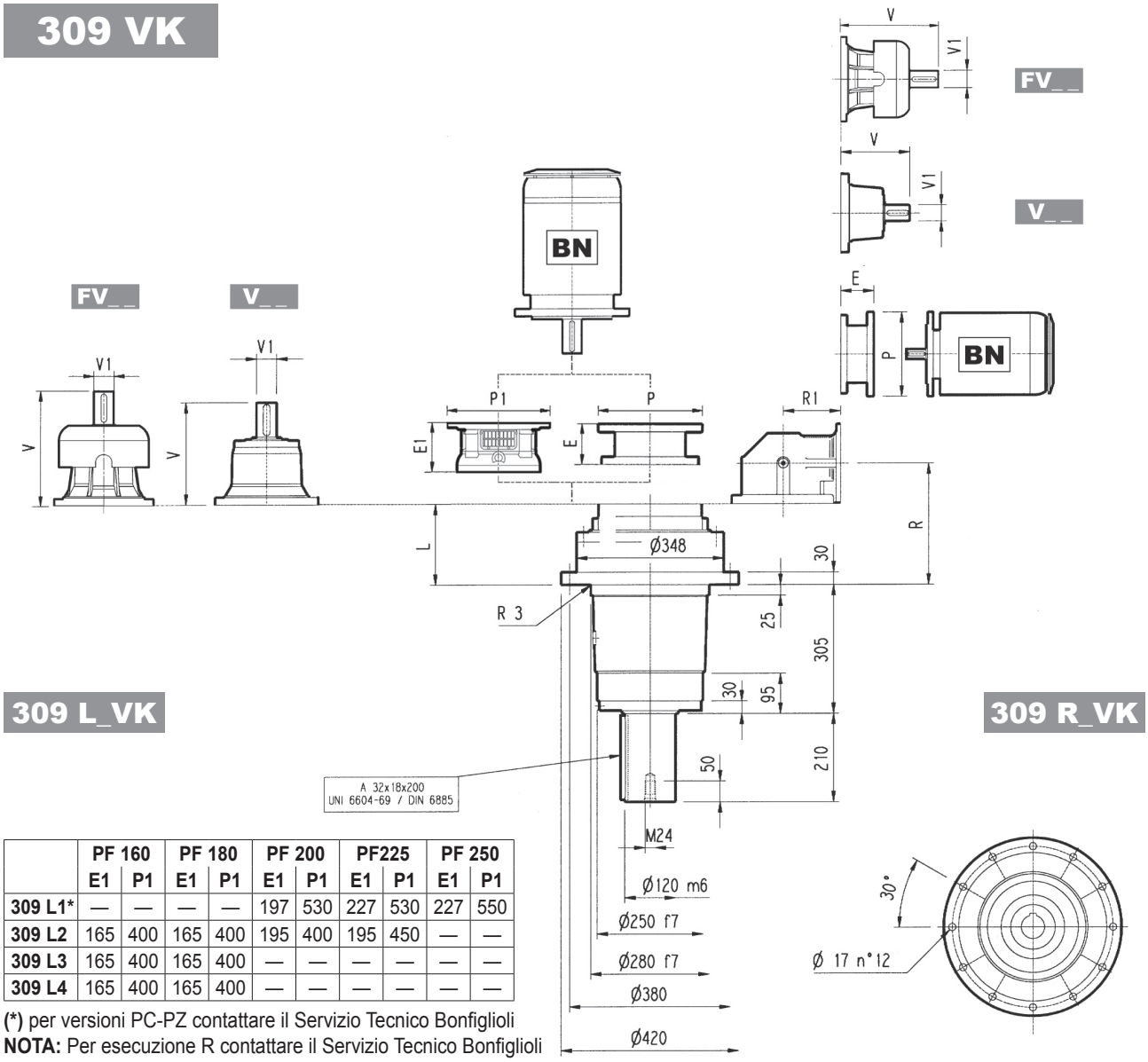

309 L_VK

309 R_VK

	PF 160		PF 180		PF 200		PF225		PF 250	
	E1	P1	E1	P1	E1	P1	E1	P1	E1	P1
309 L1*	—	—	—	—	197	530	227	530	227	550
309 L2	165	400	165	400	195	400	195	450	—	—
309 L3	165	400	165	400	—	—	—	—	—	—
309 L4	165	400	165	400	—	—	—	—	—	—

(*) per versioni PC-PZ contattare il Servizio Tecnico Bonfiglioli
NOTA: Per esecuzione R contattare il Servizio Tecnico Bonfiglioli

	L	Kg	V	V1	Kg	V	V1	Kg	V	V1	Kg	V	V1	Kg
309 L1	102	165	315	80	35	313	60	28	375	80	48	363	60	34
309 L2	191	180	239	48	15	—	—	—	276	48	17	—	—	—
309 L3	256	190	137.5	24	6	158	38	7	—	—	—	—	—	—
309 L4	309	195	137.5	24	6	158	38	7	—	—	—	—	—	—

	P71		P80		P90		P100		P112		P132		P160		P180		P200		P225		P250	
	E	P	E	P	E	P	E	P	E	P	E	P	E	P	E	P	E	P	E	P	E	P
309 L1	—	—	—	—	—	—	—	—	—	—	—	—	—	—	195	350	186	400	216	450	216	450
309 L2	—	—	—	—	—	—	—	—	—	—	114	300	144	350	144	350	174	400	—	—	—	—
309 L3	65	160	84	200	84	200	94	250	94	250	114	300	144	350	—	—	—	—	—	—	—	—
309 L4	65	160	84	200	84	200	94	250	94	250	114	300	144	350	—	—	—	—	—	—	—	—

	R	R1	Kg	V	V1	Kg	V	V1	Kg	V	V1	Kg	V	V1	Kg
309 R2	221	225	200	239	48	15	—	—	—	276	48	17	—	—	—
309 R3	283	140	190	137.5	24	6	158	38	7	—	—	—	—	—	—
309 R4	348	122	195	137.5	24	6	158	38	7	—	—	—	—	—	—

	P71		P80		P90		P100		P112		P132		P160		P180		P200	
	E	P	E	P	E	P	E	P	E	P	E	P	E	P	E	P	E	P
309 R2	—	—	—	—	—	—	—	—	—	—	114	300	144	350	144	350	174	400
309 R3	65	160	84	200	84	200	94	250	94	250	114	300	144	350	—	—	—	—
309 R4	65	160	84	200	84	200	94	250	94	250	114	300	144	350	—	—	—	—

309 VK

Il diagramma seguente consente di ricavare il carico radiale ammissibile R_{x2} quando questo è applicato alla distanza x dallo spallamento dell'albero lento del riduttore.
Le curve si riferiscono al valore risultante dal rapporto fra il carico assiale A_{n2} e il carico radiale R_{n2}, entrambi riferiti a n_2 = 10 min^{-1} e durata teorica di 10000 h.

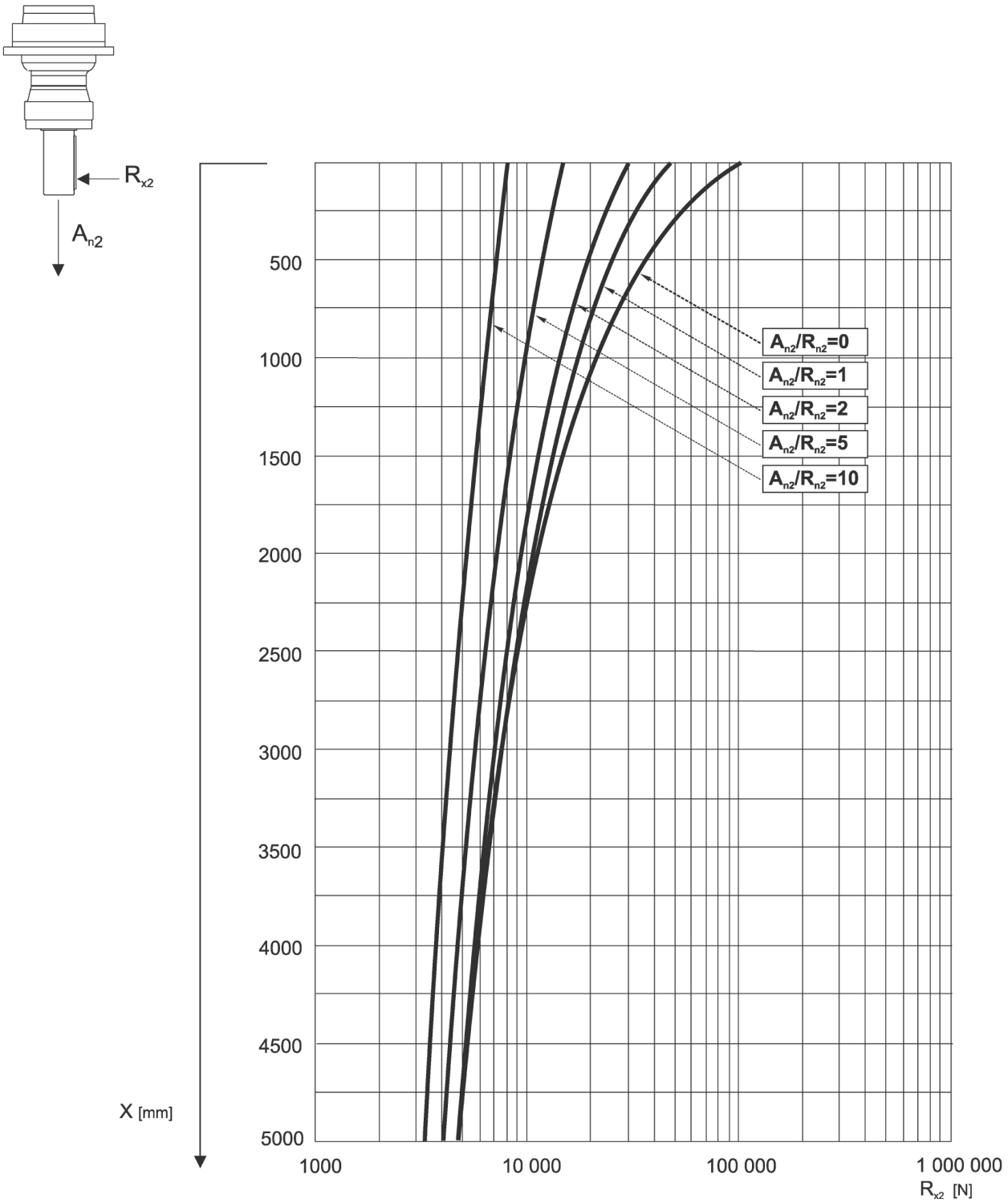

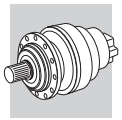

310M L

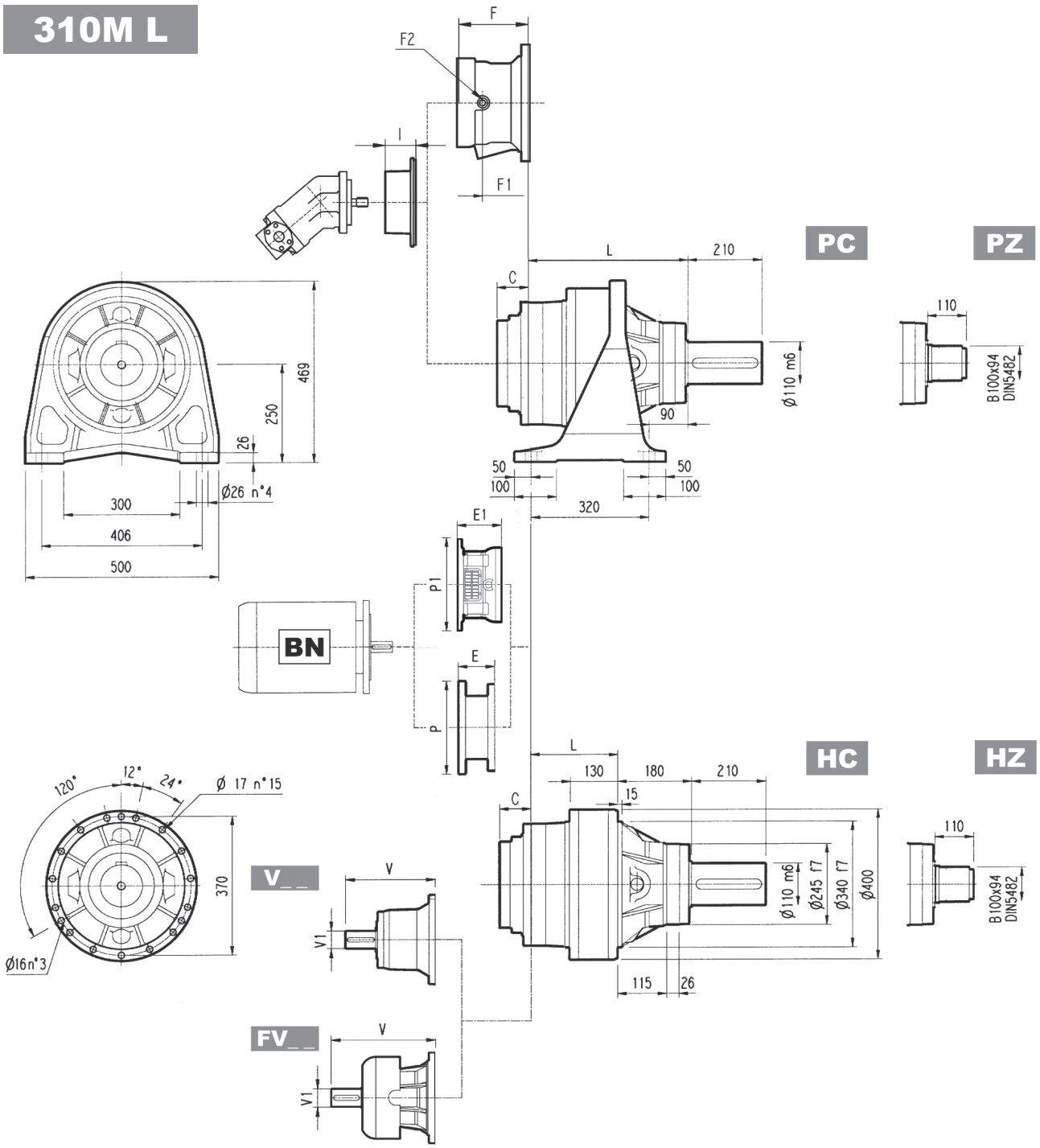

	L				Kg			
	PC - PZ	HC - HZ	FZ	FP - FDK	PC - PZ	HC - HZ	FZ	FP - FDK
310M L1	288	108	88	88	155	135	110	115
310M L2	424	244	224	224	185	165	140	145
310M L3	489	309	289	289	194	174	149	154
310M L4	542	362	342	342	198	178	153	158

	V	V1	Kg	V	V1	Kg	V	V1	Kg	V	V1	Kg	C	Input	I	F	F1	F2	Type	Input	Kg
310M L1	377	80	50	—	—	—	457	80	63	—	—	—	88	C		—	—	—	—	—	—
310M L2	307	60	23	—	—	—	357	60	28	—	—	—	45	B		195	147	1/4 G	6	B	28
310M L3	239	48	15	—	—	—	276	48	17	—	—	—	37	A		145	95	1/4 G	5	A	16
310M L4	137.5	24	6	158	38	7	—	—	—	—	—	—	37	A	461	105	65	1/4 G	4	A	10

310M L

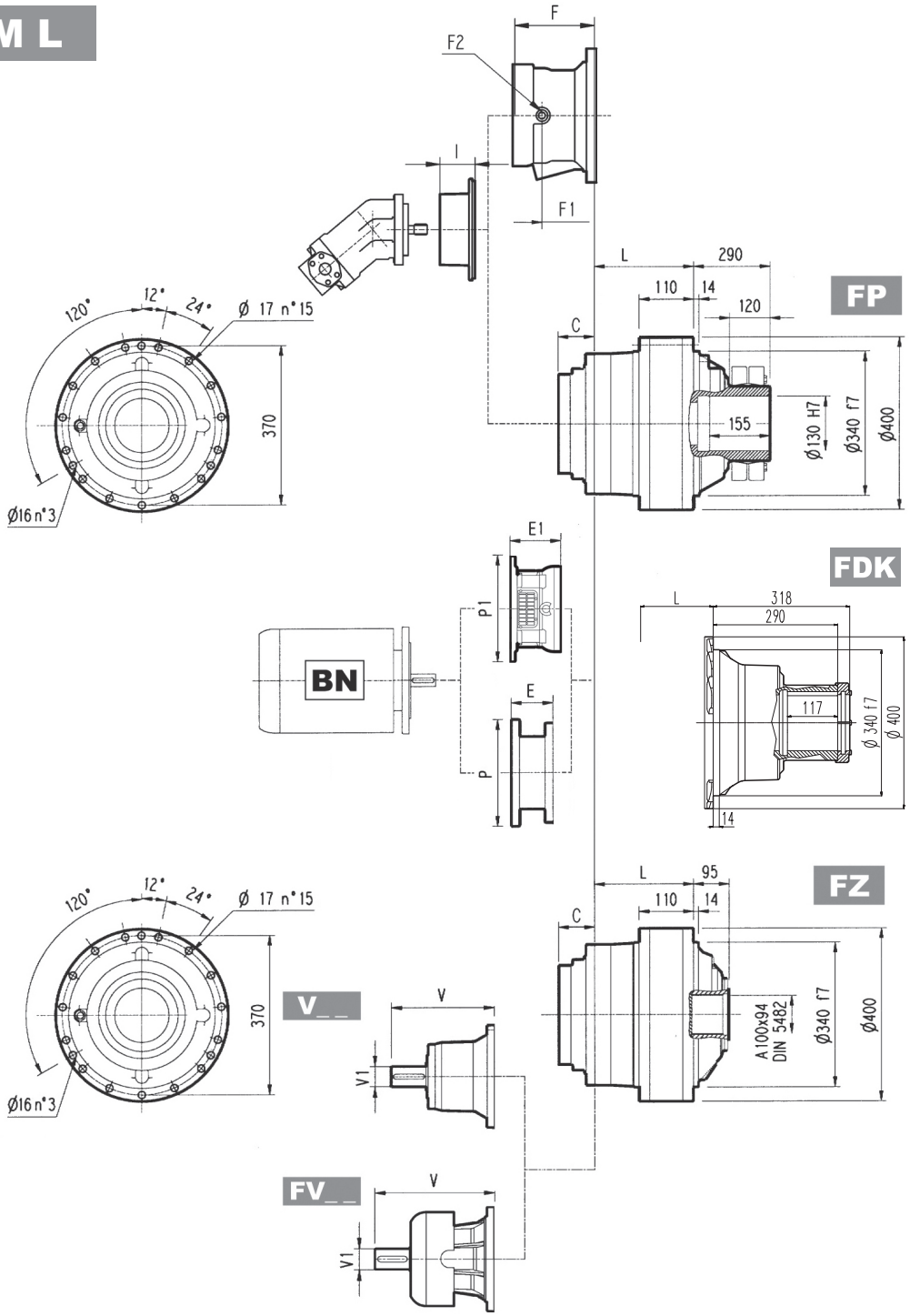

	PF 160		PF 180		PF 200		PF225		PF 250	
	E1	P1	E1	P1	E1	P1	E1	P1	E1	P1
310M L1	—	—	—	—	—	—	254	550	254	550
310M L2	—	—	167	390	197	400	197	450	207	550
310M L3	165	400	165	400	195	400	195	450	—	—
310M L4	165	400	165	400	—	—	—	—	—	—

NOTA: Per esecuzione R contattare il Servizio Tecnico Bonfiglioli

FP	**M_{2max} = 44000 Nm**

	P71		P80		P90		P100		P112		P132		P160		P180		P200		P225		P250	
	E	P	E	P	E	P	E	P	E	P	E	P	E	P	E	P	E	P	E	P	E	P
310M L1	—	—	—	—	—	—	—	—	—	—	—	—	—	—	—	—	271	400	301	450	281	550
310M L2	—	—	—	—	—	—	—	—	—	—	—	—	152	350	153	350	183	400	212	450	193	550
310M L3	—	—	—	—	—	—	—	—	—	—	114	300	144	350	144	350	174	400	—	—	—	—
310M L4	65	160	84	200	84	200	94	250	94	250	114	300	144	350	—	—	—	—	—	—	—	—

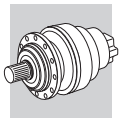

310M R

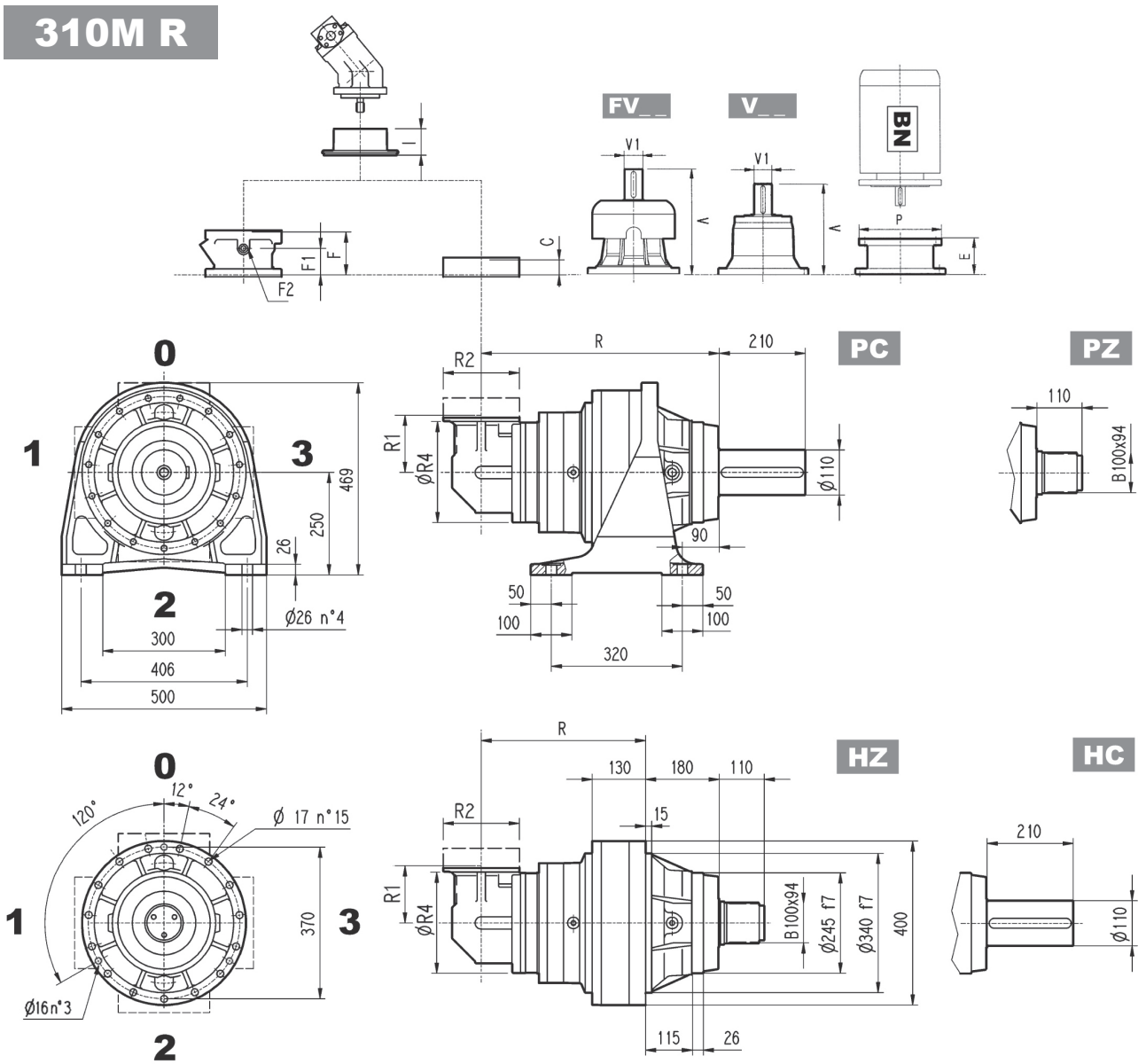

	R				R1	R2	R4	Kg			
	PC-PZ	HC-HZ	FZ	FP - FDK				PC-PZ	HC-HZ	FZ	FP - FDK
310M R2 (B)	495	315	295	295	345	292	400	280	260	240	250
310M R2 (C)	513	333	313	313	390	292	480	300	280	260	270
310M R3	561	381	361	361	140	186	244	209	189	164	169
310M R4	581	401	381	381	140	186	244	214	194	169	174

	V	V1	Kg	V	V1	Kg	V	V1	Kg	V	V1	Kg	C	Input	I	F	F1	F2	Type	Input	Kg
310M R2 (B)	307	60	23	—	—	—	357	60	28	—	—	—	45	B	461	195	147	1/4 G	6	B	28
310M R2 (C)	307	60	23	—	—	—	357	60	28	—	—	—	45	B		195	147	1/4 G	6	B	28
310M R3	137.5	24	6	158	38	7	—	—	—	—	—	—	37	A		145	95	1/4 G	5	A	16
310M R4	137.5	24	6	158	38	7	—	—	—	—	—	—	37	A		105	65	1/4 G	4	A	10

310M R

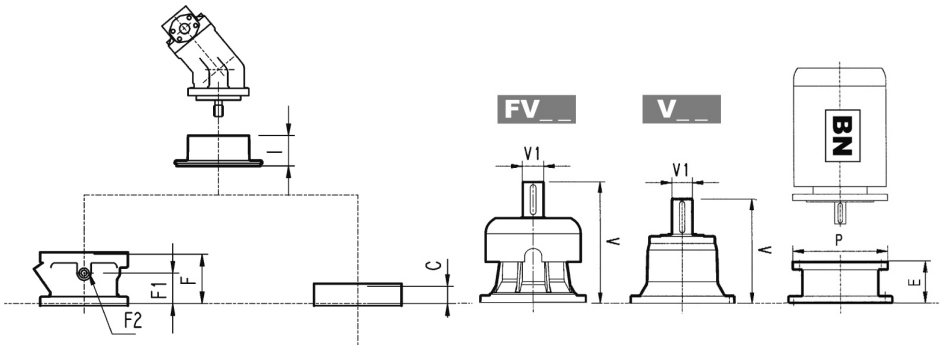

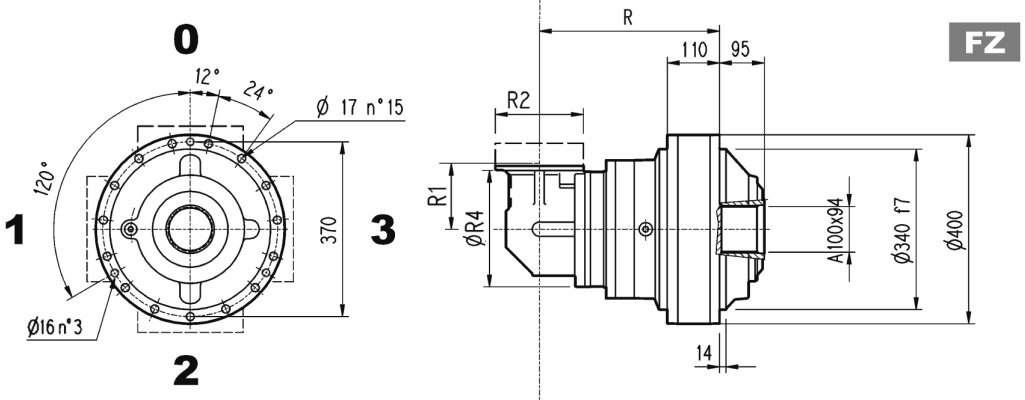

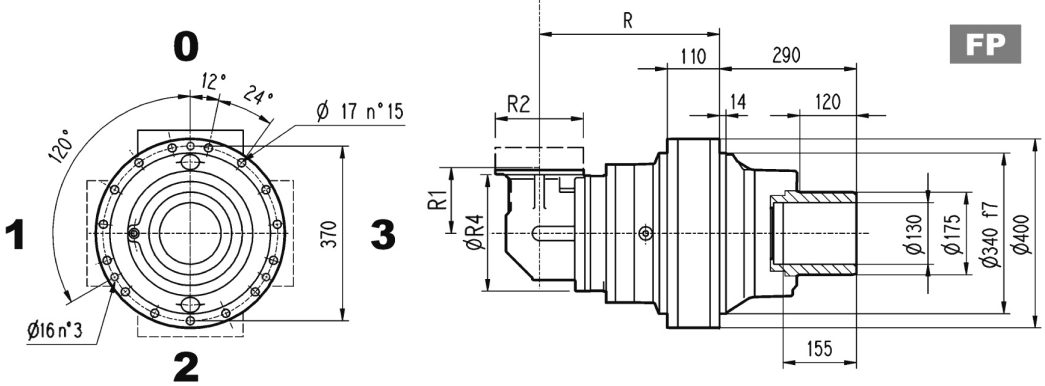

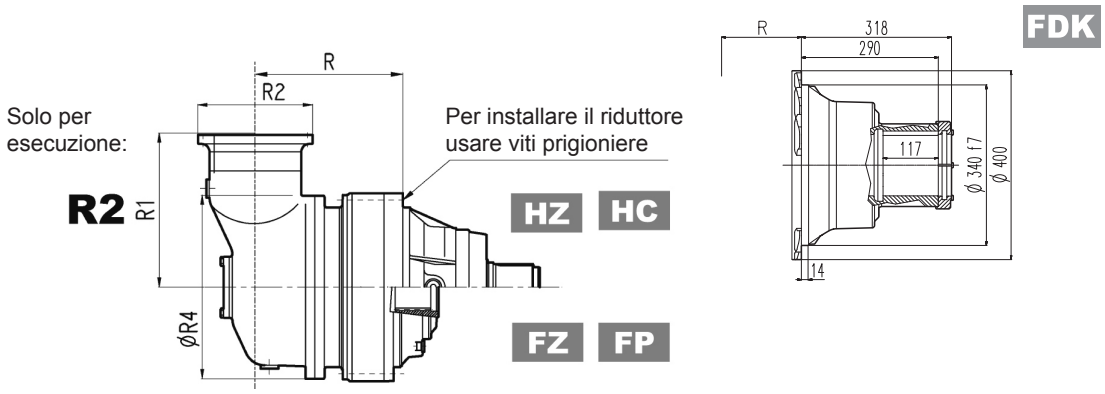

FP	M_{2max} = 44000 Nm

	P71		P80		P90		P100		P112		P132		P160		P180		P200		P225		P250	
	E	P	E	P	E	P	E	P	E	P	E	P	E	P	E	P	E	P	E	P	E	P
310M R2 (B)	—	—	—	—	—	—	—	—	—	—	—	—	152	350	152	350	182	400	212	450	—	—
310M R2 (C)	—	—	—	—	—	—	—	—	—	—	—	—	152	350	152	350	182	400	212	450	193	550
310M R3	65	160	84	200	84	200	94	250	94	250	114	300	144	350	—	—	—	—	—	—	—	—
310M R4	65	160	84	200	84	200	94	250	94	250	114	300	144	350	—	—	—	—	—	—	—	—

3/V 10M L3

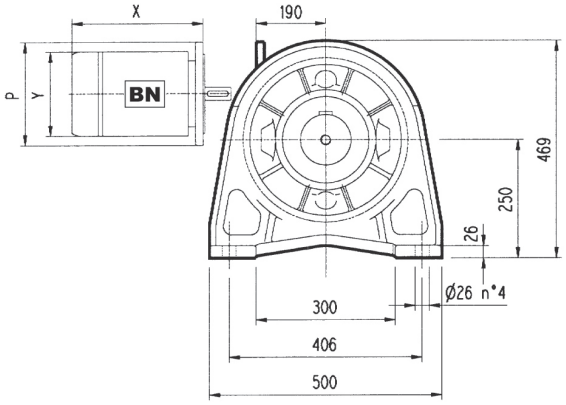

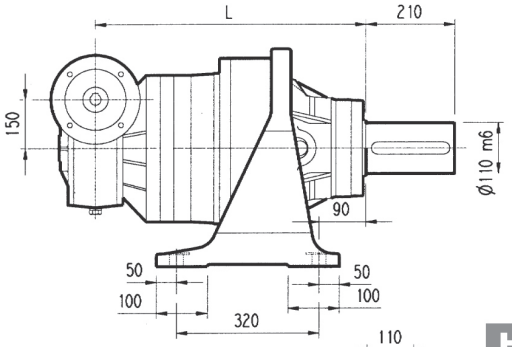

PC

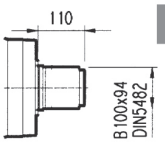

HZ PZ

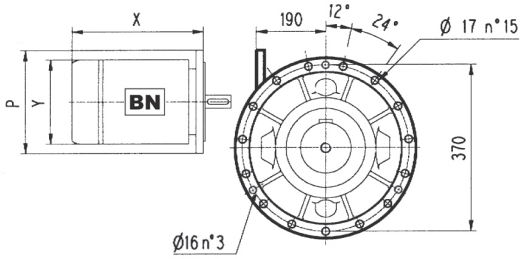

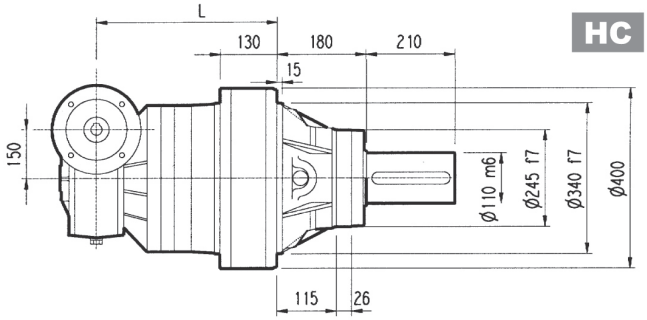

HC

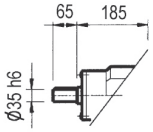

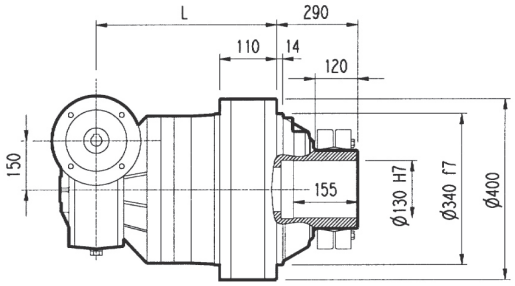

FP

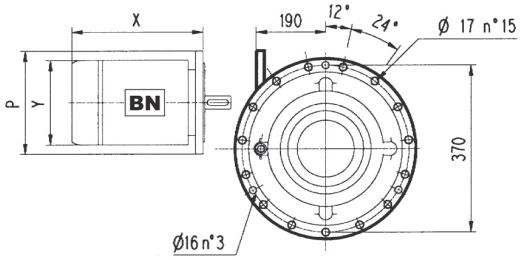

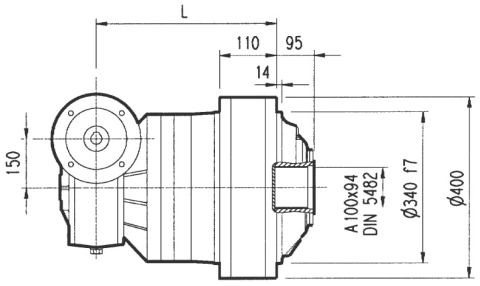

FZ

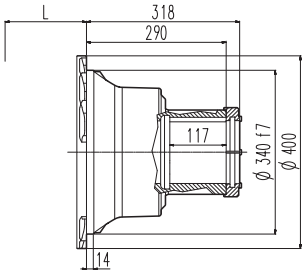

FDK

FP	M_{2max} = 44000 Nm

	L				Kg				P71	P80	P90	P100	P112	P132	P160
	PC - PZ	HC - HZ	FZ	FP	PC - PZ	HC - HZ	FZ	FP	P	P	P	P	P	P	P
3/V 10M L3	608	428	408	408	245	225	200	205	—	—	—	250	250	300	300

3/V 10M L4

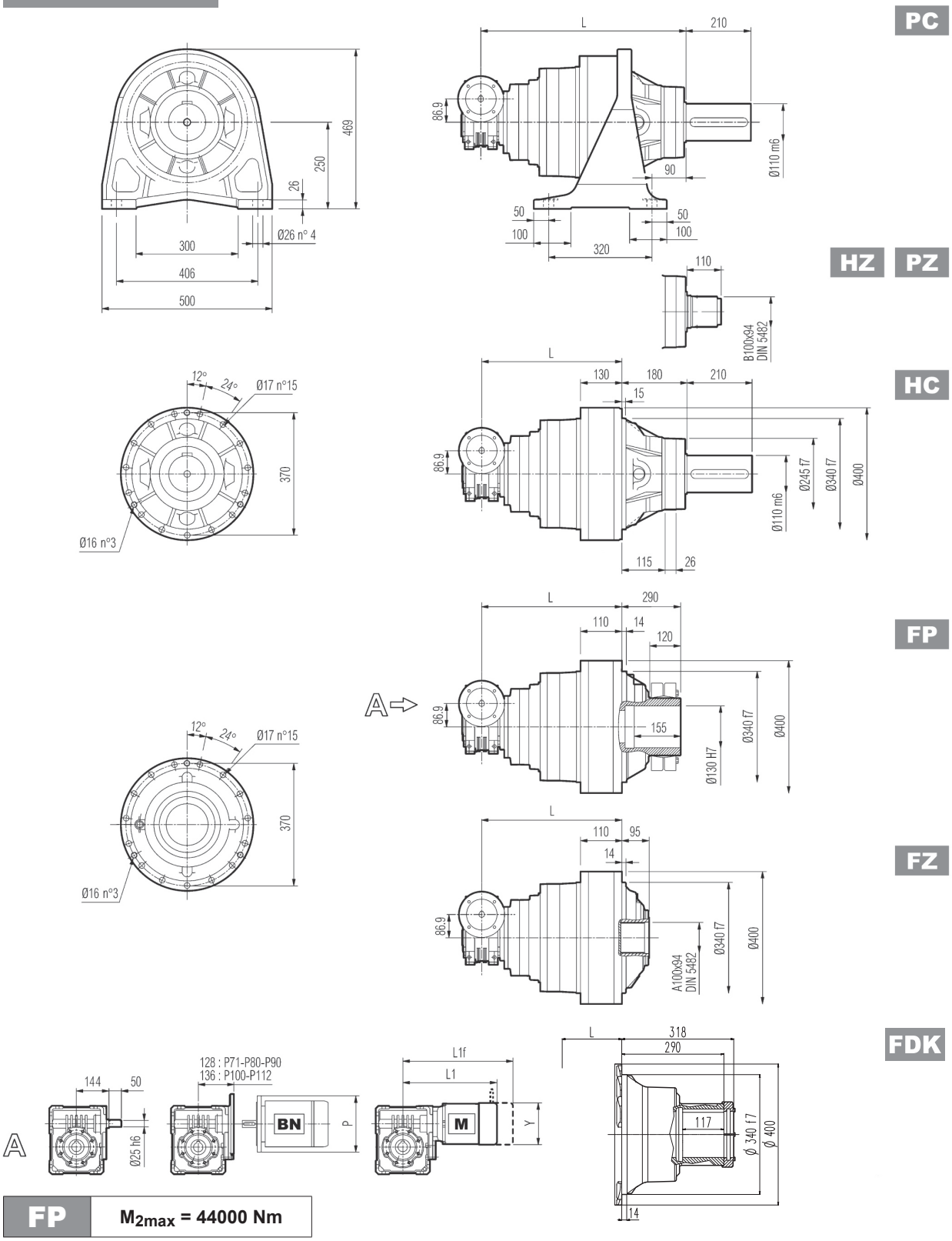

FP	M_{2max} = 44000 Nm

	L				Kg			
	PC - PZ	HC - HZ	FZ	FP - FDK	PC - PZ	HC - HZ	FZ	FP - FDK
3/V 10M L4	634	454	434	434	210	190	165	170

	P71	P80	P90	P100	P112	S1 + M1			S2 + M2S			S3 + M3S			S3 + M3L		
	P	P	P	P	P	L1	L1f	Y	L1	L1f	Y	L1	L1f	Y	L1	L1f	Y
3/V 10M L4	160	200	200	250	250	324	385	138	349	425	156	392	477	193	424	515	193

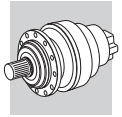

310M L 310M R 3/V 10M L

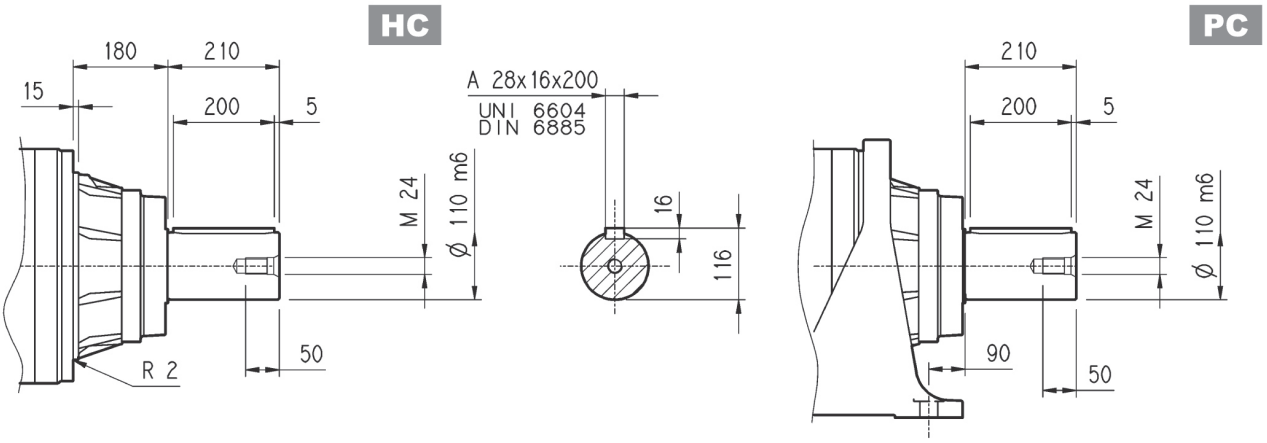

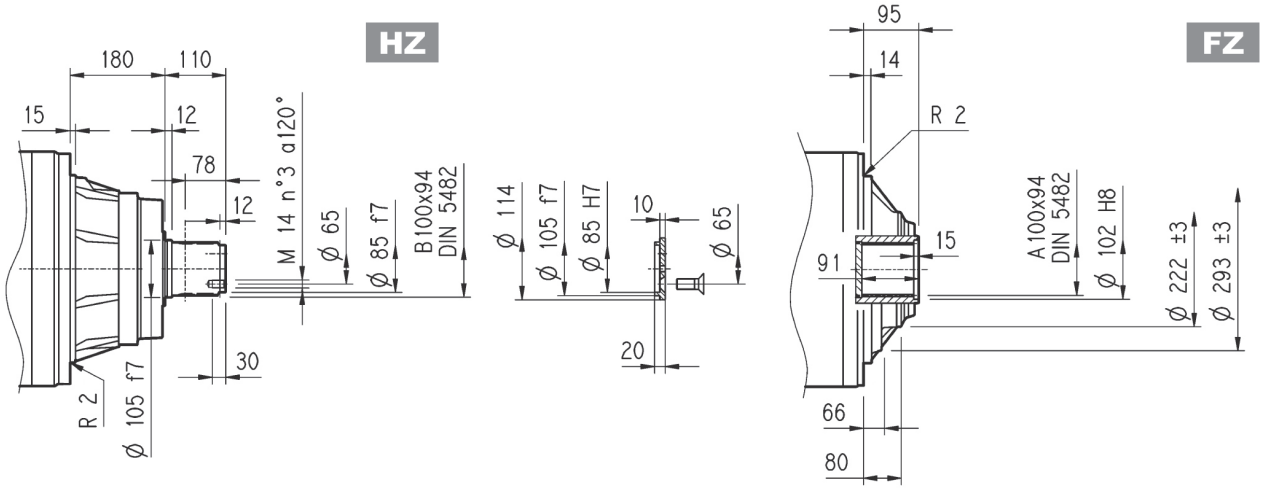

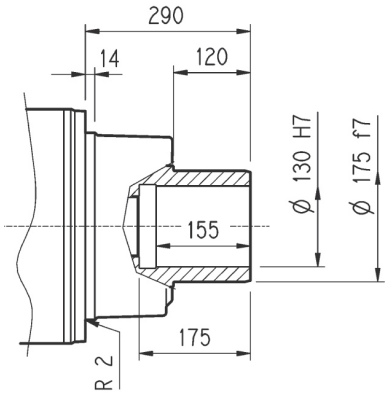

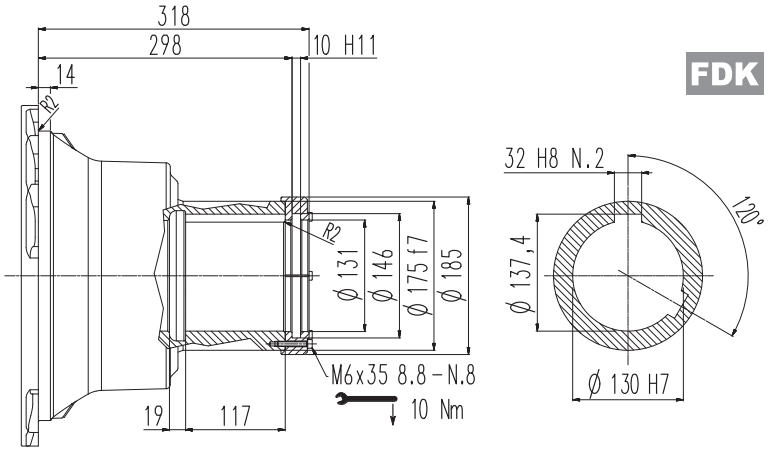

FP	M_{2max} = 44000 Nm

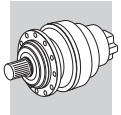

310M L 310M R 3/V 10M L

Flangia

W0A

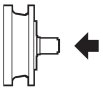

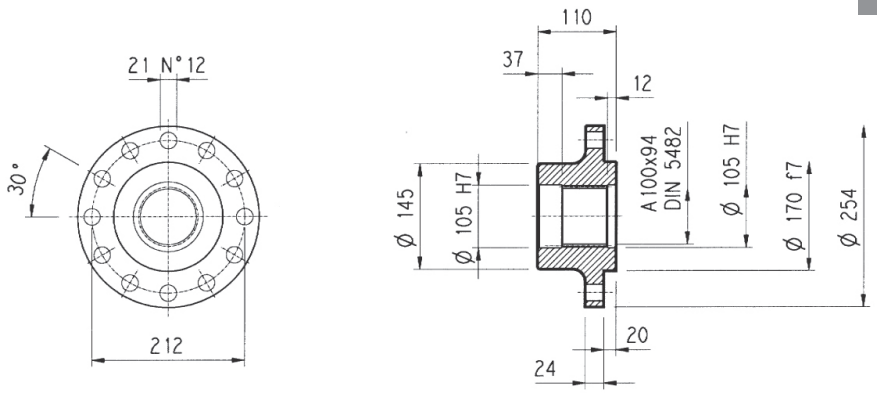

Materiale: Acciaio C40

Pignoni

P...

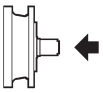

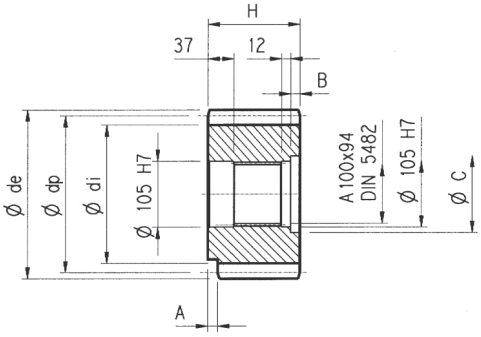

α = 20°

	m	z	x	dp	di	de	H	A	B	C	Materiale
PLQ	12	23	—	276	246	300	110	—	—	—	Acciaio 18NiCrMo5 Cementato e temprato
PPD	16	13	0.500	208	184	252.5	145	—	35	116	Acciaio 39NiCrMo3 Bonificato
PPF	16	15	0.450	240	215	280	125	—	15	120	

Manicotti lisci

M0A

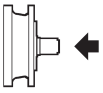

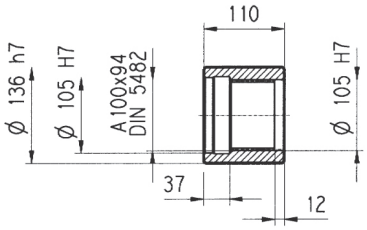

Materiale: Acciaio 16CrNi4

Barre scanalate

B0A

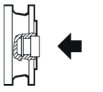

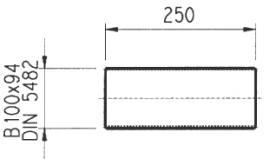

Materiale: Acciaio 18NiCrMo5 UNI 5331
da cementare e temprare 50-55 HRC

Giunto ad attrito

G0A

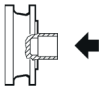

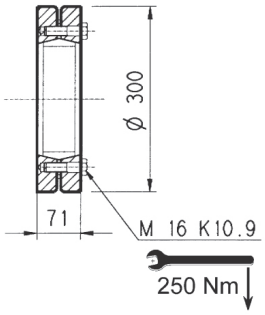

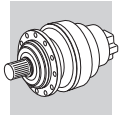

310M L 310M R

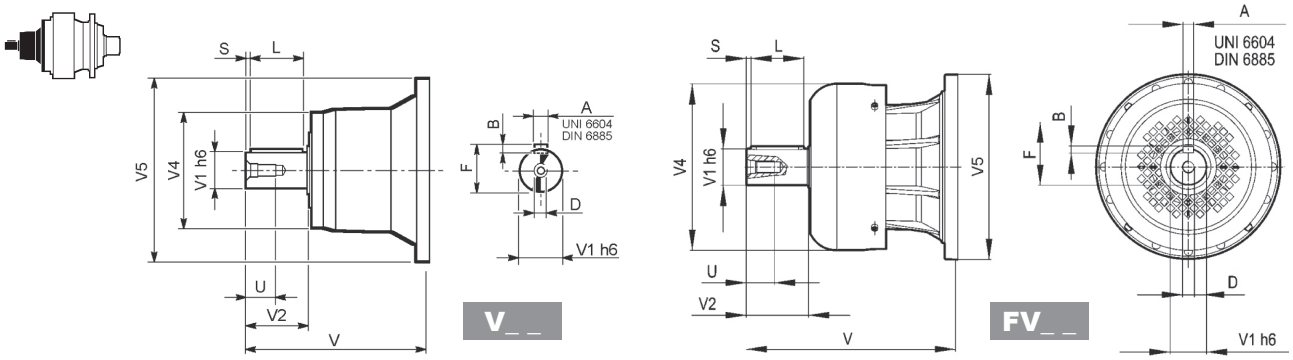

		V	V1	V2	V4	V5	A	B	F	L	S	D	U
310M L1	V10B	377	80	130	200	400	22	14	85	110	10	M16	36
	FV10B	457	80	130	347.5	400	22	14	85	110	10	M16	36
310M L2	V06B	307	60	105	155	292	18	11	64	90	7.5	M16	36
	FV06B	357	60	105	309	292	18	11	64	90	7.5	M16	36
310M L3	V05B	239	48	82	155	245	14	9	51.5	70	6	M16	36
	FV05B	276	48	82	219.5	244	14	9	51.5	70	6	M16	36
310M L4	V01A	137.5	24	36	120	186	8	7	27	30	3	M8	19
	V01B	158	38	58	120	186	10	8	41	50	4	M12	28
310M R2 (B) (C)	V06B	307	60	105	155	292	18	11	64	90	7.5	M16	36
	FV06B	357	60	105	309	292	18	11	64	90	7.5	M16	36
310M R3-R4	V01A	137.5	24	36	120	186	8	7	27	30	3	M8	19
	V01B	158	38	58	120	186	10	8	41	50	4	M12	28

310M L 310M R

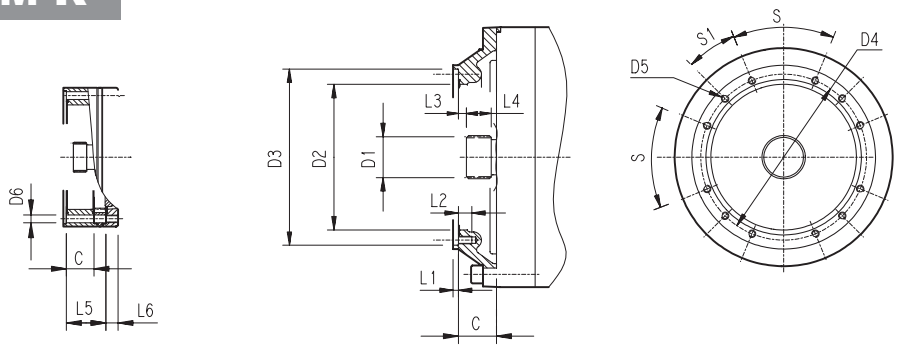

		C	D1	D2	D3	D4	D5	D6	L1	L2	L3	L4	L5	L6	S	S1	Input
310M L1	V9AC	88	70x64 DIN 5482	200	282 H7	266	M12 n°12	—	4	22	11	32	—	—	45°	45°	C
310M L2	V9AB	45	58x53 DIN 5482	195	236 H7	222	M10 n°12	—	4	18	11	22	—	—	45°	22.5°	B
310M L3	V9AA	37	40x36 DIN 5482	140	178 H7	165	M10 n°8	—	4	18	9	18	—	—	45°	45°	A
310M L4	V9AA	37	40x36 DIN 5482	140	178 H7	165	M10 n°8	11	4	—	9	18	53	18	45°	45°	A
310M R2 (B) (C)	V9AA	45	58x53 DIN 5482	195	236 H7	222	M10 n°12	—	4	18	11	22	—	—	45°	22.5°	B
310M R3-R4	V9AA	37	40x36 DIN 5482	140	178 H7	165	M10 n°8	11	4	—	9	18	37	18	45°	45°	A

3/V 10M L

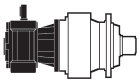

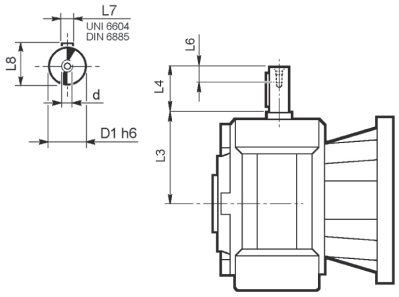

	D1 h6	L3	L4	L6	L7	L8	d
3/V 10M L3_HS	35	185	65	20	10	38	M8
3/V 10M L4_HS	25	144	50	19	8	28	M8

310M L 310M R 3/V 10M L

Carichi radiali ed assiali ammissibili sull'albero lento per un valore di Fh_2 : $n_2 \cdot h = 100000$

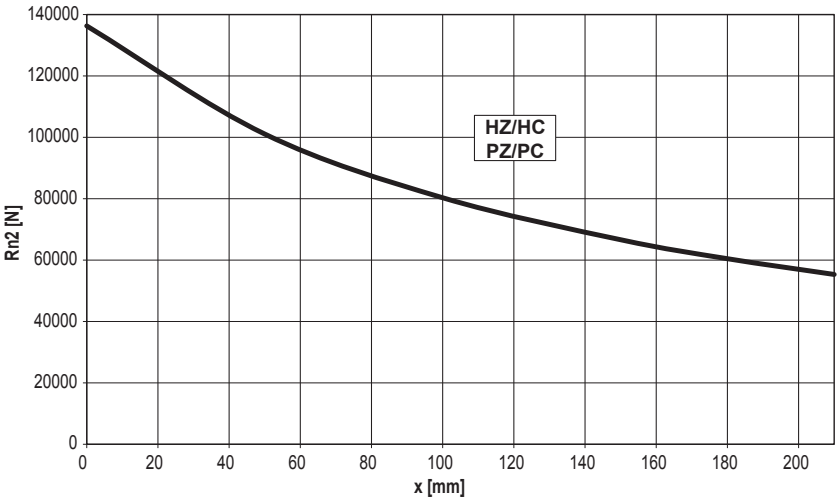

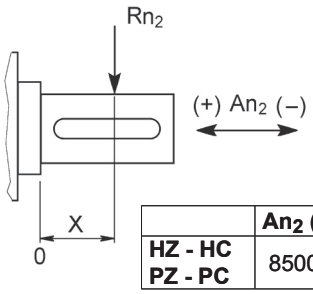

	An_2 (+)	An_2 (-)
HZ - HC PZ - PC	85000	50000

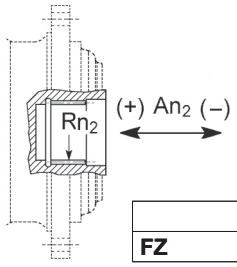

	Rn_2	An_2 (+/-)
FZ	30170	24136

Fattore fh_2 correttivo per carichi sugli alberi	$Fh_2 = n_2 \cdot h$		10000	25000	50000	100000	500000	1000000
	fh_2	FZ	**2.15**	**1.59**	**1.26**	**1.00**	**0.58**	**0.46**
		HZ - HC - PZ - PC	**1.27**	**1.27**	**1.23**	**1.00**	**0.62**	**0.50**

Carichi radiali ammissibili sull'albero veloce per un valore di Fh_1 : $n_1 \cdot h = 250000$

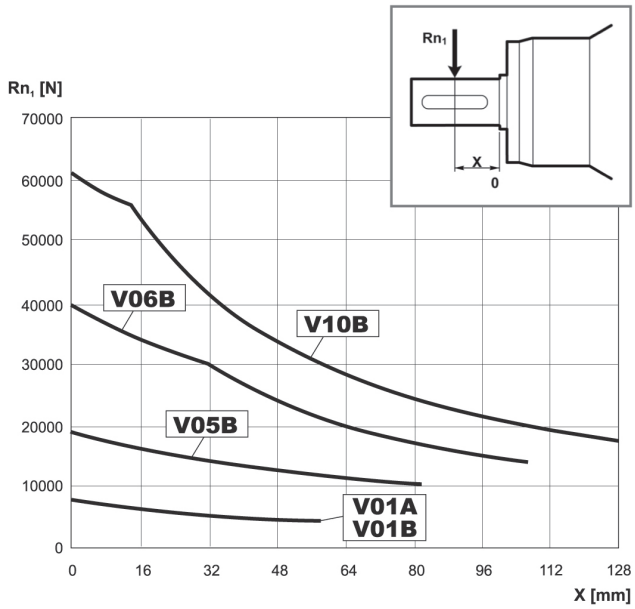

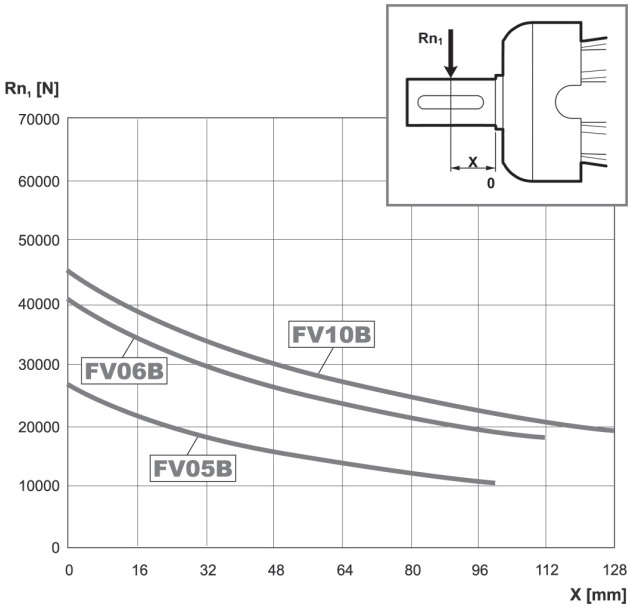

Fattore fh_1 correttivo per carichi sugli alberi	$Fh_1 = n_1 \cdot h$	250000	500000	1000000	2000000	5000000	10000000
	fh_1	**1**	**0.79**	**0.63**	**0.50**	**0.37**	**0.29**

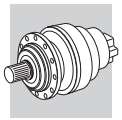

310M VK

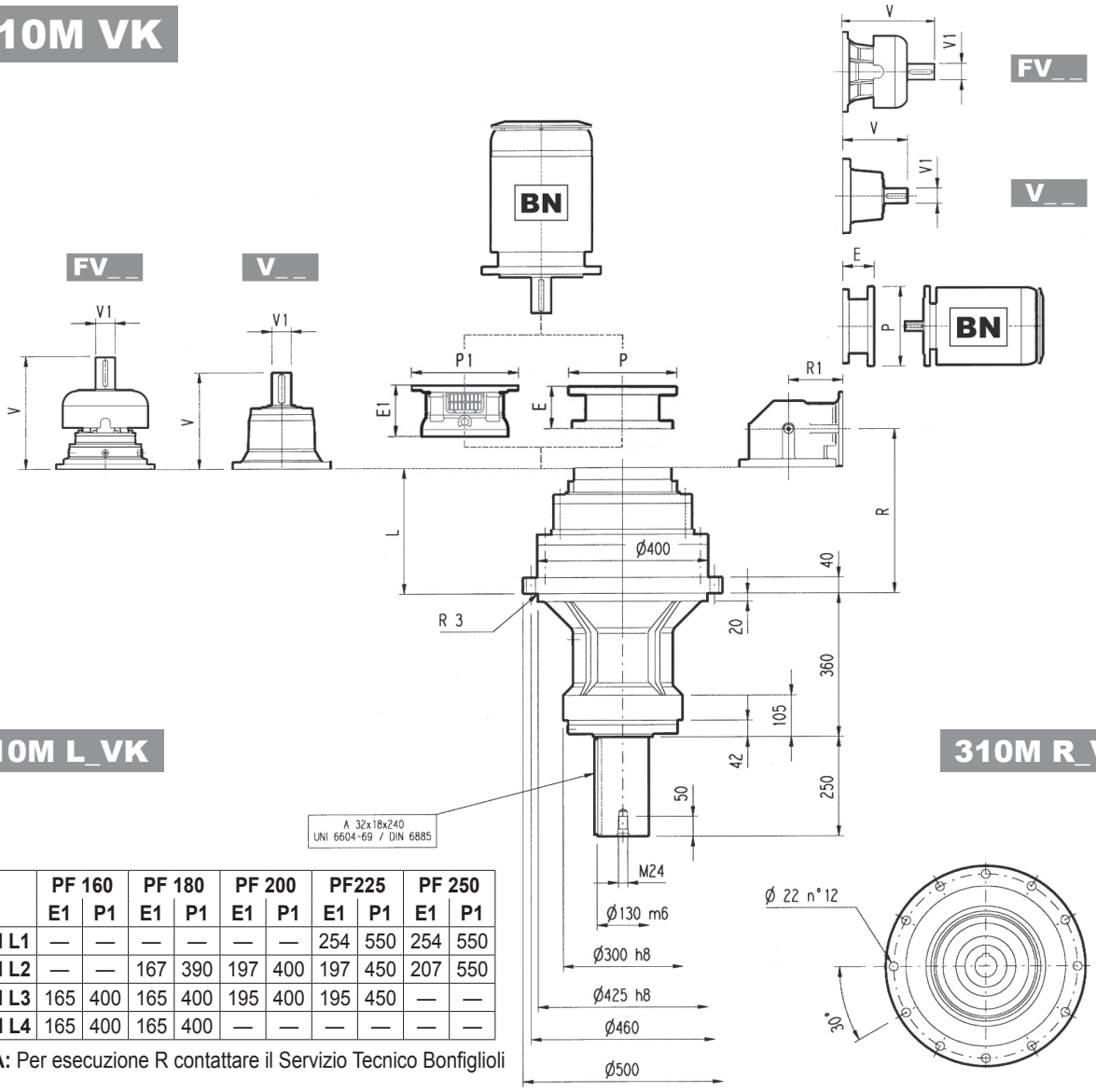

	PF 160		PF 180		PF 200		PF225		PF 250	
	E1	P1	E1	P1	E1	P1	E1	P1	E1	P1
310M L1	—	—	—	—	—	—	254	550	254	550
310M L2	—	—	167	390	197	400	197	450	207	550
310M L3	165	400	165	400	195	400	195	450	—	—
310M L4	165	400	165	400	—	—	—	—	—	—

NOTA: Per esecuzione R contattare il Servizio Tecnico Bonfiglioli

	L	Kg	V	V1	Kg	V	V1	Kg	V	V1	Kg	V	V1	Kg
310M L1	107	200	377	80	50	—	—	—	457	80	63	—	—	—
310M L2	243	230	307	60	23	—	—	—	357	60	28	—	—	—
310M L3	308	240	239	48	15	—	—	—	276	48	17	—	—	—
310M L4	361	245	137.5	24	6	158	38	7	—	—	—	—	—	—

	P71		P80		P90		P100		P112		P132		P160		P180		P200		P225		P250	
	E	P	E	P	E	P	E	P	E	P	E	P	E	P	E	P	E	P	E	P	E	P
310M L1	—	—	—	—	—	—	—	—	—	—	—	—	—	—	—	—	271	400	301	450	281	550
310M L2	—	—	—	—	—	—	—	—	—	—	—	—	152	350	153	350	183	400	212	450	193	550
310M L3	—	—	—	—	—	—	—	—	—	—	114	300	144	350	144	350	174	400	—	—	—	—
310M L4	65	160	84	200	84	200	94	250	94	250	114	300	144	350	—	—	—	—	—	—	—	—

	R	R1	Kg	V	V1	Kg	V	V1	Kg	V	V1	Kg	V	V1	Kg
310M R2 (B)	315	345	320	307	60	23	—	—	—	357	60	28	—	—	—
310M R2 (C)	333	390	340	307	60	23	—	—	—	357	60	28	—	—	—
310M R3	380	140	250	137.5	24	6	158	38	7	—	—	—	—	—	—
310M R4	400	140	260	137.5	24	6	158	38	7	—	—	—	—	—	—

	P71		P80		P90		P100		P112		P132		P160		P180		P200		P225	
	E	P	E	P	E	P	E	P	E	P	E	P	E	P	E	P	E	P	E	P
310M R2 (B)	—	—	—	—	—	—	—	—	—	—	—	—	—	—	152	350	182	400	212	450
310M R2 (C)	—	—	—	—	—	—	—	—	—	—	114	300	152	350	152	350	182	400	212	450
310M R3	65	160	84	200	84	200	94	250	94	250	114	300	144	350	—	—	—	—	—	—
310M R4	65	160	84	200	84	200	94	250	94	250	114	300	144	350	—	—	—	—	—	—

310M VK

Il diagramma seguente consente di ricavare il carico radiale ammissibile R_{x2} quando questo è applicato alla distanza x dallo spallamento dell'albero lento del riduttore.
Le curve si riferiscono al valore risultante dal rapporto fra il carico assiale A_{n2} e il carico radiale R_{n2}, entrambi riferiti a n_2 = 10 min^{-1} e durata teorica di 10000 h.

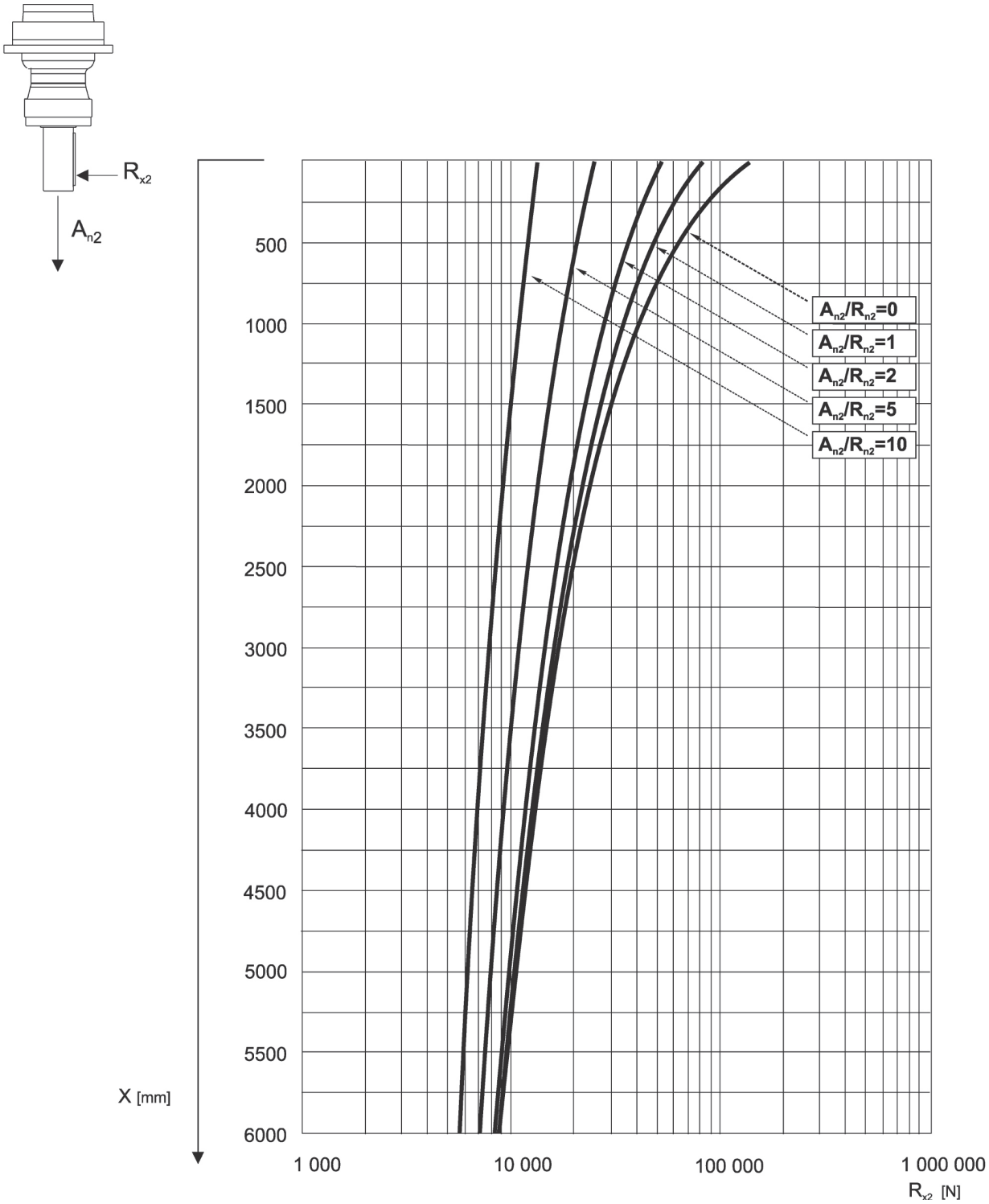

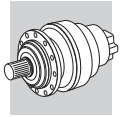

311M L

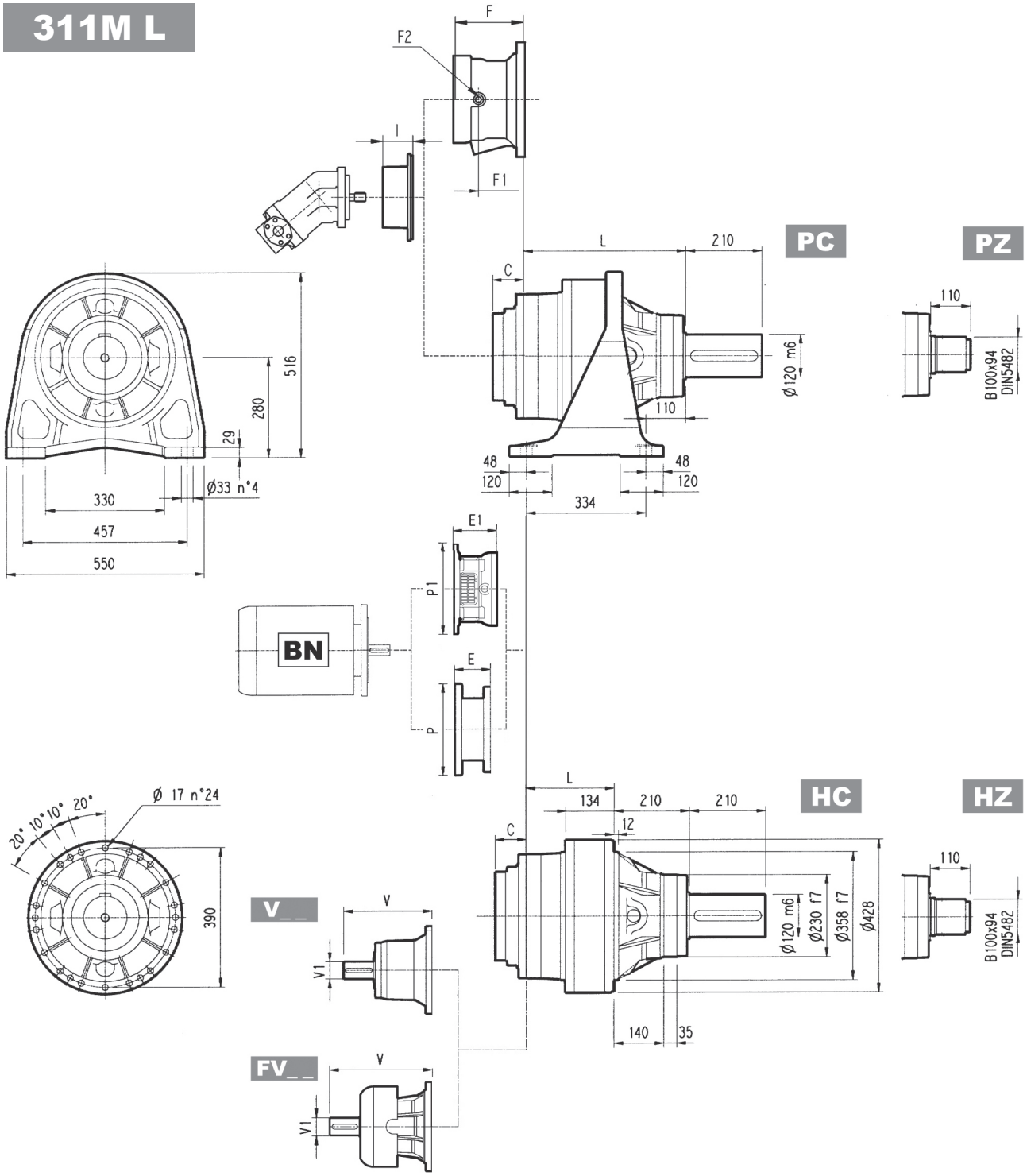

	L				Kg			
	PC - PZ	HC - HZ	FZ - FZP	FP	PC - PZ	HC - HZ	FZ - FZP	FP
311M L1	325	115	115	115	250	180	160	170
311M L2	458	248	248	248	295	225	205	215
311M L3	547	337	337	337	307	237	217	227
311M L4	612	402	402	402	314	244	224	234

	V	V1	Kg	V	V1	Kg	V	V1	Kg	V	V1	Kg	C	Input	I	F	F1	F2	Type	Input	Kg
311M L1	348	80	55	—	—	—	456	80	85	—	—	—	81	D		—	—	—	—	—	—
311M L2	315	80	35	313	60	28	375	80	48	363	60	34	51	B		201	153	1/4 G	6	B	28
311M L3	239	48	15	—	—	—	276	48	17	—	—	—	37	A		145	95	1/4 G	5	A	16
311M L4	137.5	24	6	158	38	7	—	—	—	—	—	—	37	A	461	105	65	1/4 G	4	A	10

311M L

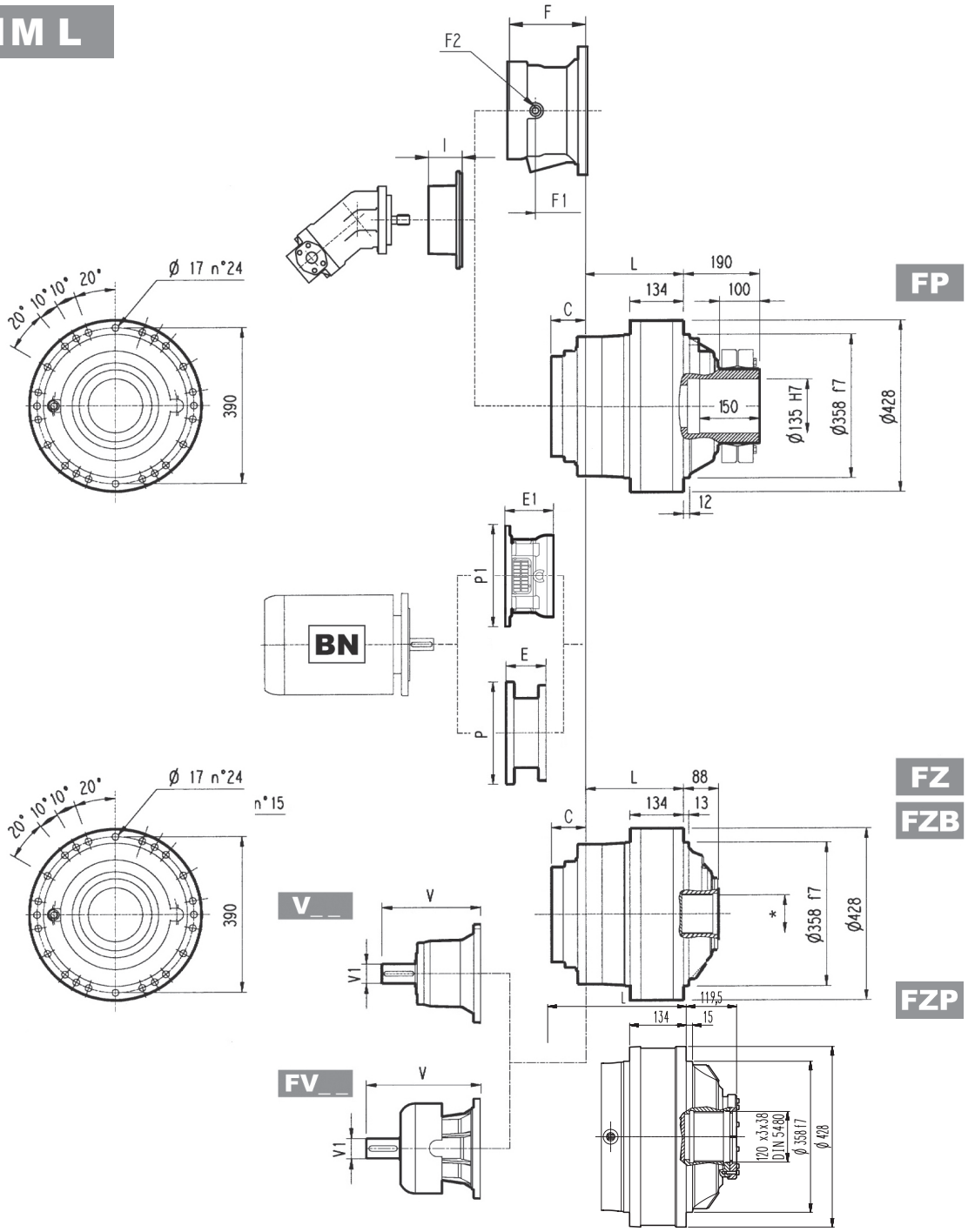

	PF 160		PF 180		PF 200		PF225		PF 250	
	E1	P1	E1	P1	E1	P1	E1	P1	E1	P1
311M L1	—	—	—	—	—	—	250	580	250	580
311M L2	—	—	—	—	197	530	227	530	227	550
311M L3	165	400	165	400	195	400	195	450	—	—
311M L4	165	400	165	400	—	—	—	—	—	—

NOTA: Per esecuzione R contattare il Servizio Tecnico Bonfiglioli

* Per dimensioni vedere pag. 356

FZB	**M_{2max} = 66900 Nm**
FP	**M_{2max} = 55000 Nm**

	P71		P80		P90		P100		P112		P132		P160		P180		P200		P225		P250	
	E	P	E	P	E	P	E	P	E	P	E	P	E	P	E	P	E	P	E	P	E	P
311M L1	—	—	—	—	—	—	—	—	—	—	—	—	—	—	—	—	267	400	297	450	297	550
311M L2	—	—	—	—	—	—	—	—	—	—	—	—	—	—	195	350	186	400	216	450	216	550
311M L3	—	—	—	—	—	—	—	—	—	—	114	300	144	350	144	350	174	400	—	—	—	—
311M L4	65	160	84	200	84	200	94	250	94	250	114	300	144	350	—	—	—	—	—	—	—	—

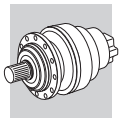

311M R

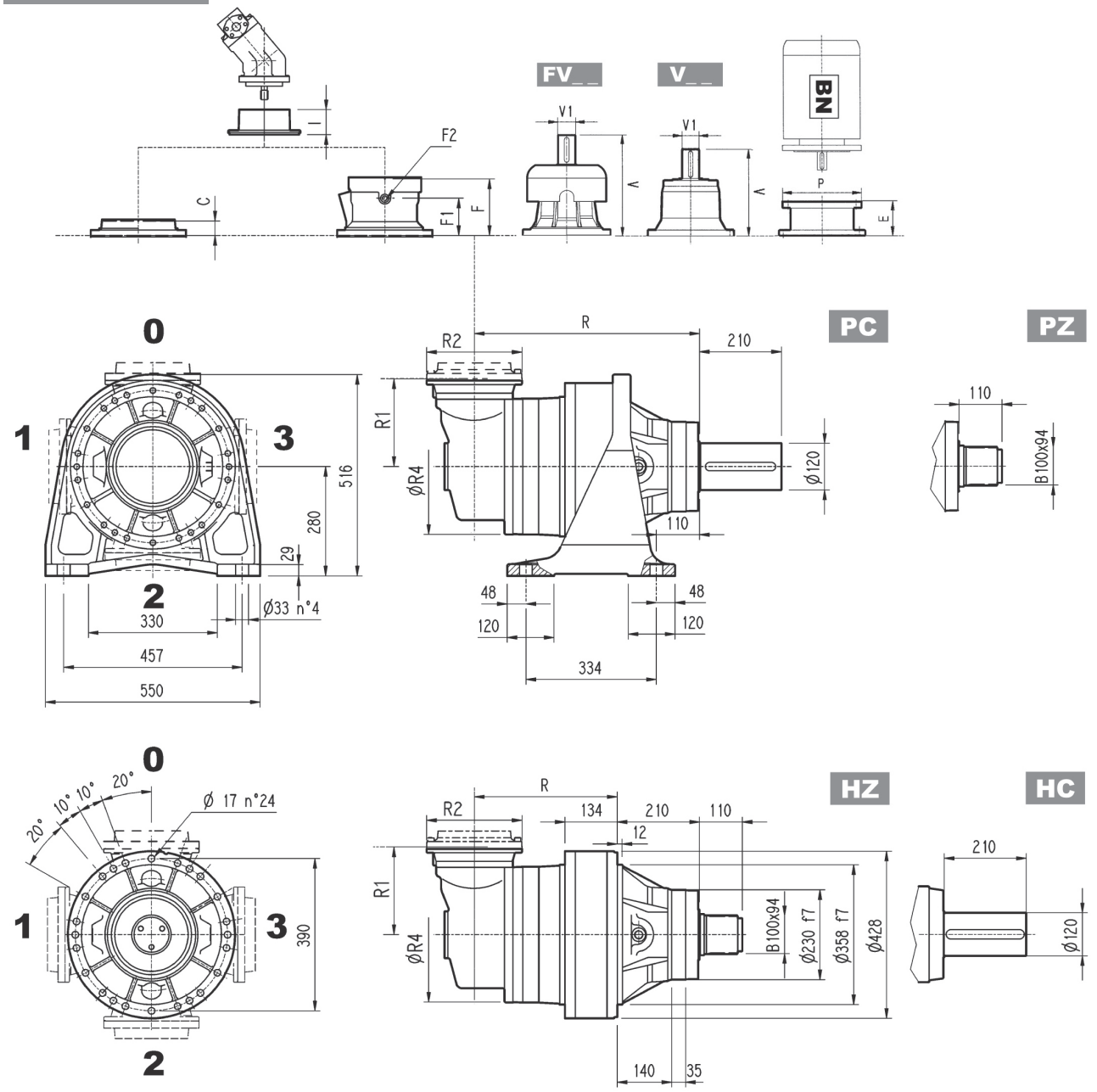

	R				R1	R2	R4	Kg			
	PC-PZ	HC-HZ	FZ - FZP	FP				PC-PZ	HC-HZ	FZ - FZP	FP
311M R2 (B)	550	340	340	340	345	292	400	380	310	290	300
311M R2 (C)	550	340	340	340	390	292	480	390	320	300	310
311M R3	577	367	367	367	225	245	375	345	275	255	265
311M R4	639	429	429	429	140	186	244	327	257	237	247

	V	V1	Kg	V	V1	Kg	V	V1	Kg	V	V1	Kg	C	Input	I	F	F1	F2	Type	Input	Kg
311M R2 (B)	307	60	23	—	—	—	357	60	28	—	—	—	45	B	461	195	147	1/4 G	6	B	28
311M R2 (C)	307	60	23	—	—	—	357	60	28	—	—	—	45	B		195	147	1/4 G	6	B	28
311M R3	239	48	15	—	—	—	276	48	17	—	—	—	37	A		145	95	1/4 G	5	A	16
311M R4	137.5	24	6	158	38	7	—	—	—	—	—	—	37	A		105	65	1/4 G	4	A	10

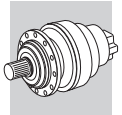

311M R

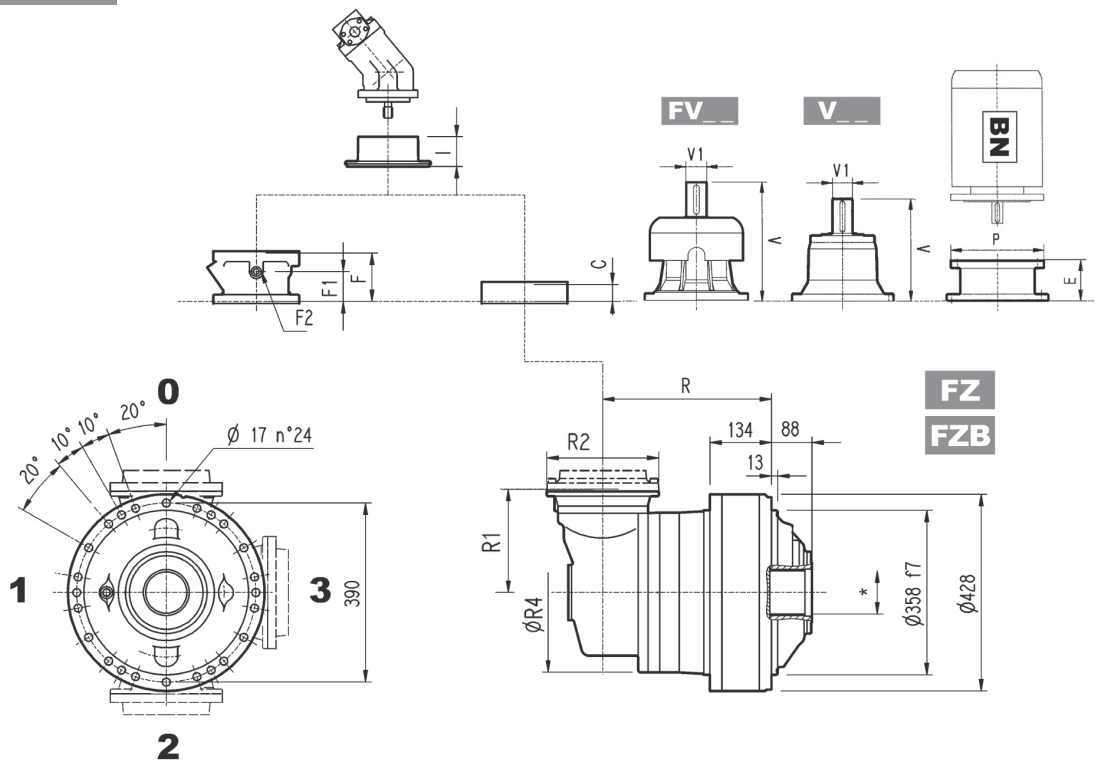

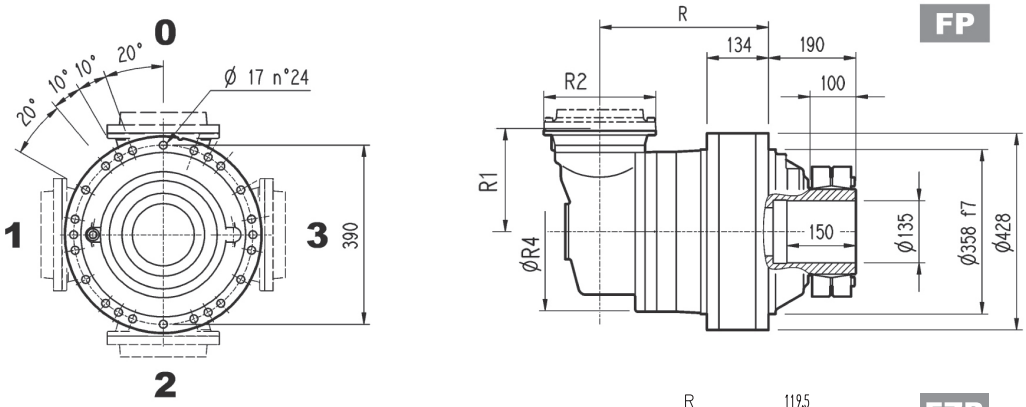

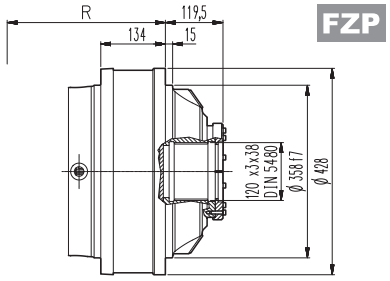

Solo per esecuzione:

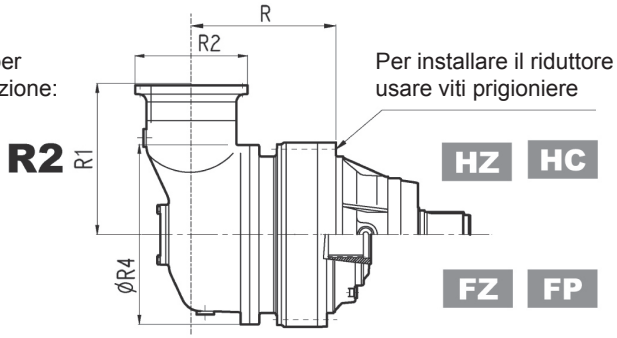

Per installare il riduttore usare viti prigioniere

FZB	M_{2max} = 66900 Nm

FP	M_{2max} = 55000 Nm

* Per dimensioni vedere pag. 356

	P71		P80		P90		P100		P112		P132		P160		P180		P200		P225		P250	
	E	P	E	P	E	P	E	P	E	P	E	P	E	P	E	P	E	P	E	P	E	P
311M R2 (B)	—	—	—	—	—	—	—	—	—	—	—	—	—	—	152	350	182	400	212	450	193	550
311M R2 (C)	—	—	—	—	—	—	—	—	—	—	—	—	—	—	152	350	182	400	212	450	193	550
311M R3	—	—	—	—	—	—	—	—	—	—	114	300	144	350	144	350	174	400	—	—	—	—
311M R4	65	160	84	200	84	200	94	250	94	250	114	300	144	350	—	—	—	—	—	—	—	—

3/V 11M L3

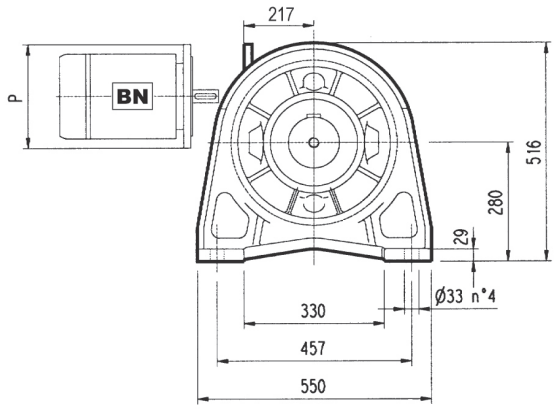

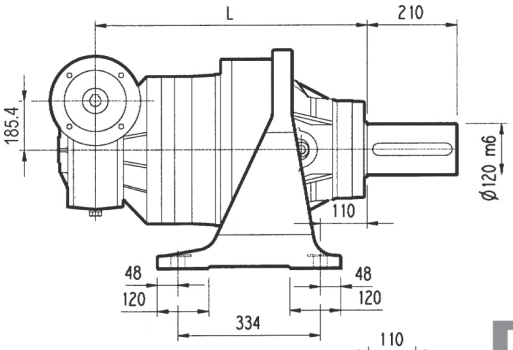

PC

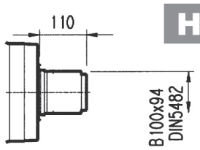

HZ PZ

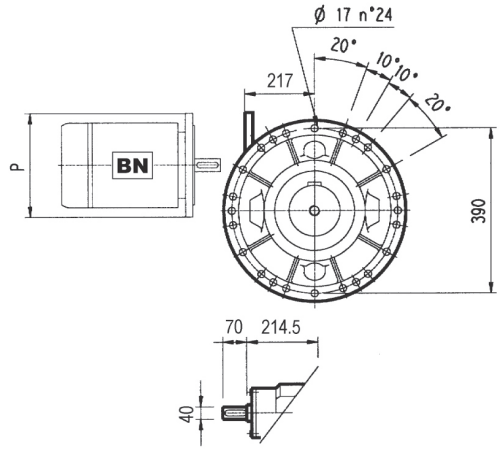

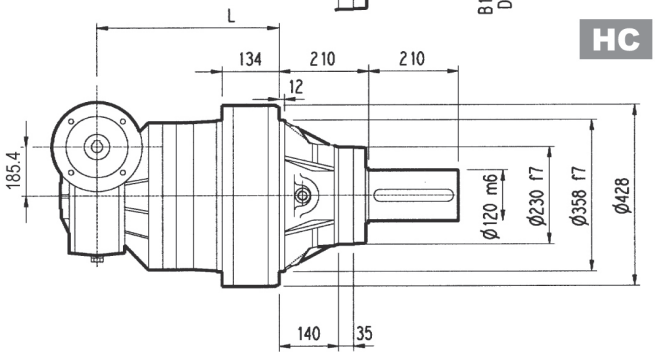

HC

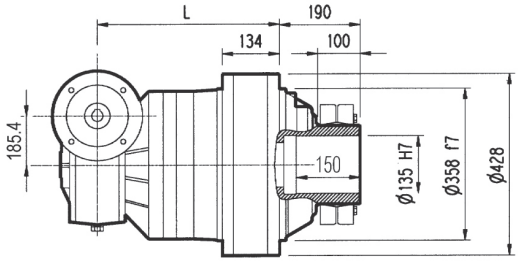

FP

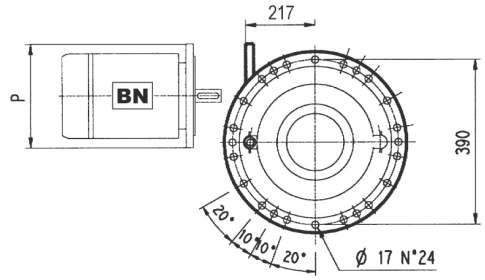

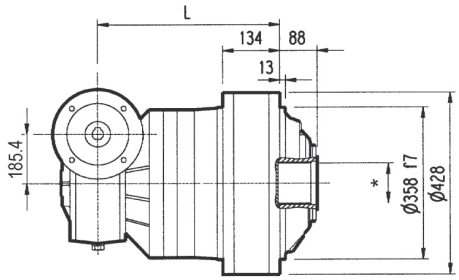

FZ
FZB

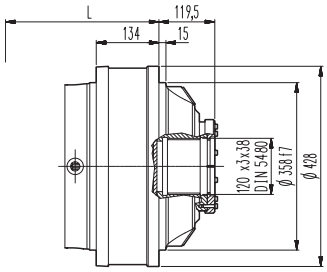

FZP

* Per dimensioni vedere pag. 356

FZB	**M_{2max} = 66900 Nm**
FP	**M_{2max} = 55000 Nm**

	L				Kg				P80	P90	P100	P112	P132	P160	P180
	PC - PZ	HC - HZ	FZ	FP	PC - PZ	HC - HZ	FZ	FP	P	P	P	P	P	P	P
3/V 11M L3	659	449	449	449	390	320	300	310	—	—	250	250	300	350	350

3/V 11M L4

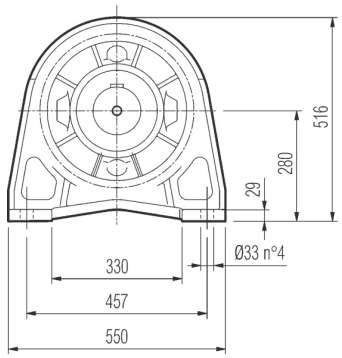

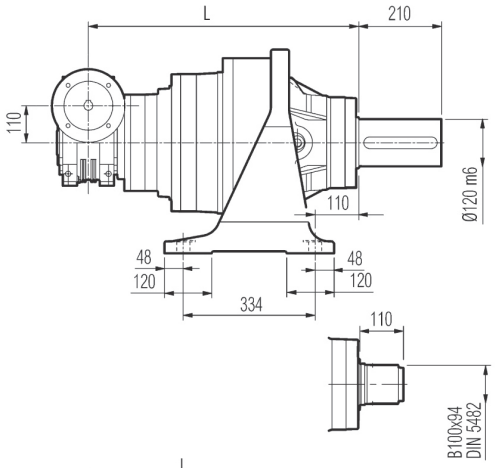

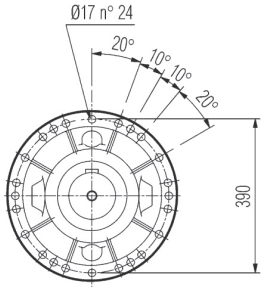

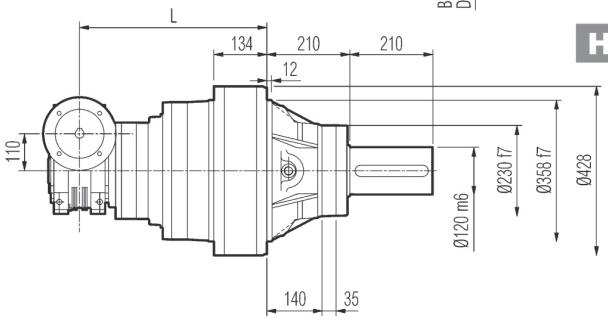

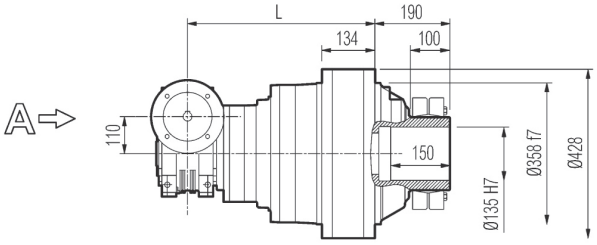

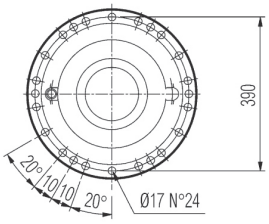

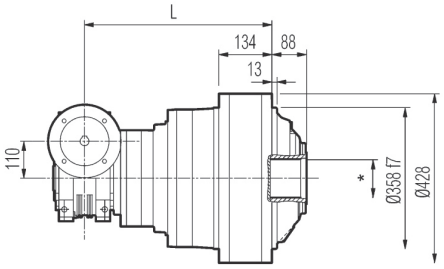

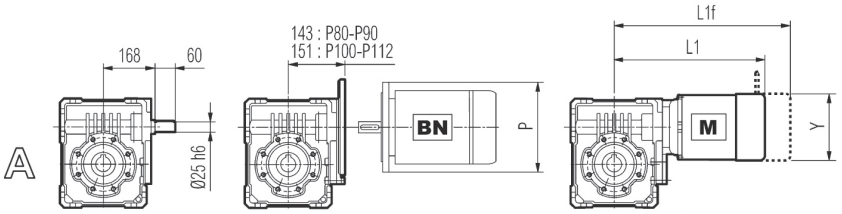

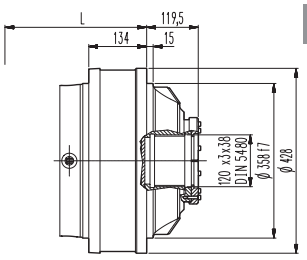

FZB	M_{2max} = 66900 Nm	FP	M_{2max} = 55000 Nm

* Per dimensioni vedere pag. 356

	L				Kg			
	PC - PZ	HC - HZ	FZ - FZP	FP	PC - PZ	HC - HZ	FZ - FZP	FP
3/V 11M L4	707	497	497	497	340	270	250	260

	P80	P90	P100	P112	S2 + M2S			S3 + M3S			S3 + M3L		
	P	P	P	P	L1	L1f	Y	L1	L1f	Y	L1	L1f	Y
3/V 11M L4	200	200	250	250	364	440	156	407	503	193	439	530	193

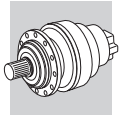

311M L 311M R 3/V 11M L

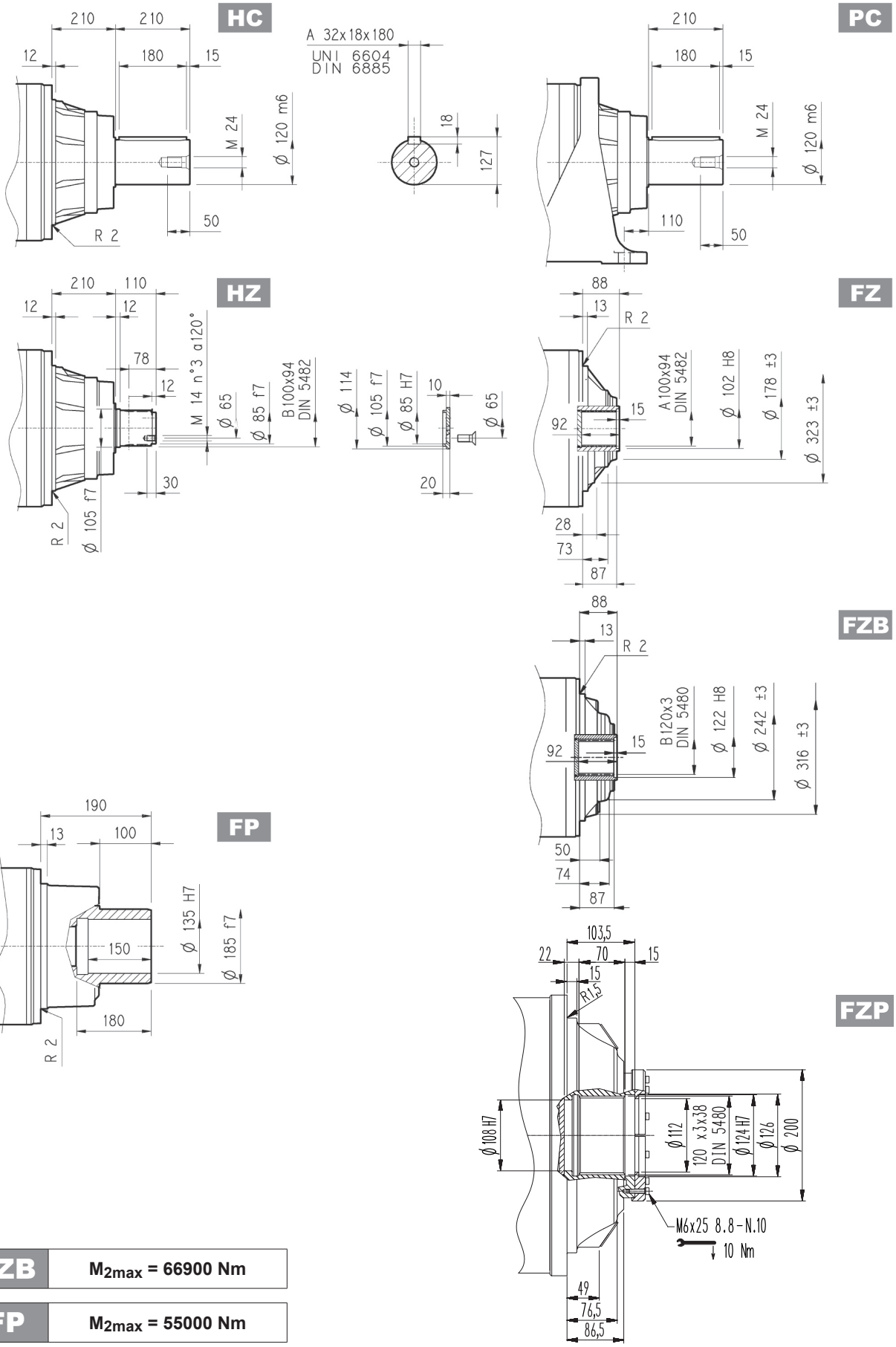

FZB	**M_{2max} = 66900 Nm**
FP	**M_{2max} = 55000 Nm**

Flangia

W0A

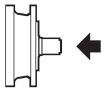

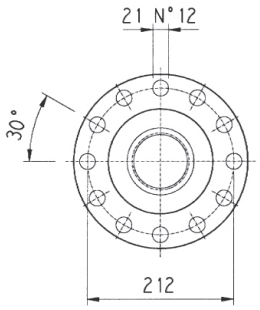

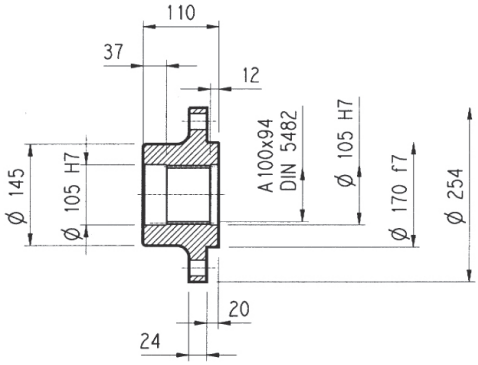

Materiale: Acciaio C40

Pignoni

P...

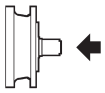

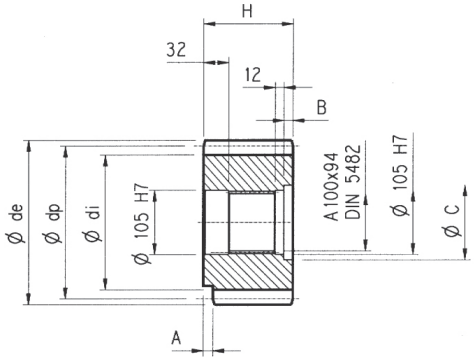

α = 20°

	m	z	x	dp	di	de	H	A	B	C	Materiale
PLQ	12	23	—	276	246	300	110	—	—	—	Acciaio 18NiCrMo5 Cementato e temprato
PPD	16	13	0.500	208	184	252.5	145	—	35	116	Acciaio 39NiCrMo3 Bonificato
PPF	16	15	0.450	240	215	280	125	—	15	120	

Manicotti lisci

M0A

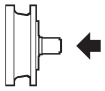

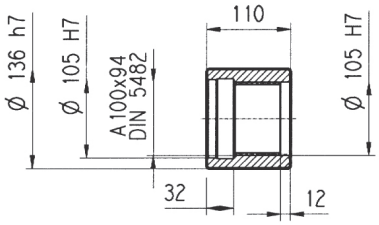

Materiale: Acciaio 16CrNi4

Barre scanalate

B0A

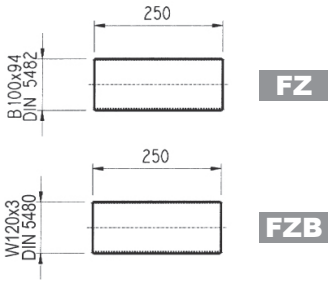

Materiale: Acciaio 18NiCrMo5 UNI 5331
da cementare e temprare 50-55 HRC

Giunto ad attrito

G0A

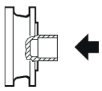

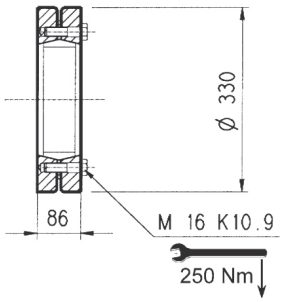

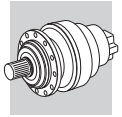

311M L 311M R

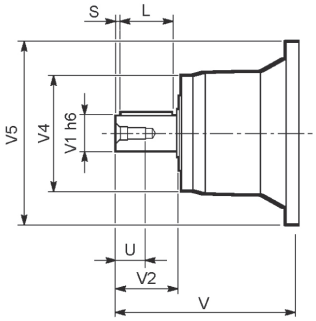

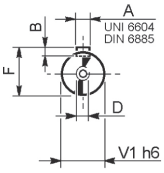

V_ _

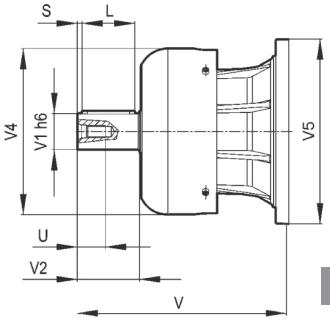

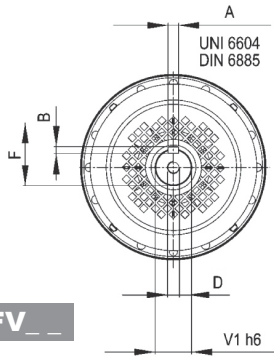

FV_ _

		V	V1	V2	V4	V5	A	B	F	L	S	D	U
311M L1	V11B	348	80	130	200	428	22	14	85	110	10	M16	36
	FV11B	456	80	130	347.5	428	22	14	85	110	10	M16	36
311M L2	V07B	315	80	130	200	345	22	14	85	110	10	M16	36
	FV07B	375	80	130	347.5	348	22	14	85	110	10	M16	36
	V07A	313	60	105	155	345	18	11	64	90	7.5	M16	36
	FV07A	363	60	105	309	348	18	11	64	90	7.5	M16	36
311M L3	V05B	239	48	82	155	245	14	9	51.5	70	6	M16	36
	FV05B	276	48	82	219.5	244	14	9	51.5	70	6	M16	36
311M L4	V01A	137.5	24	36	120	186	8	7	27	30	3	M8	19
	V01B	158	38	58	120	186	10	8	41	50	4	M12	28
311M R2 (B)(C)	V06B	307	60	105	155	292	18	11	64	90	7.5	M16	36
	FV06B	357	60	105	309	292	18	11	64	90	7.5	M16	36
311M R3	V05B	239	48	82	155	245	14	9	51.5	70	6	M16	36
	FV05B	276	48	82	219.5	244	14	9	51.5	70	6	M16	36
311M R4	V01A	137.5	24	36	120	186	8	7	27	30	3	M8	19
	V01B	158	38	58	120	186	10	8	41	50	4	M12	28

311M L 311M R

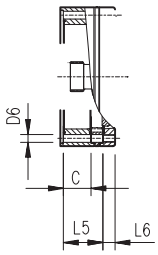

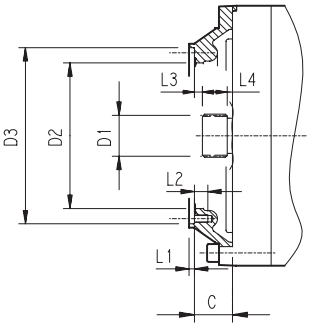

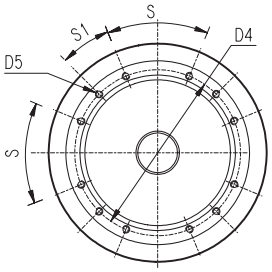

		C	D1	D2	D3	D4	D5	D6	L1	L2	L3	L4	L5	L6	S	S1	Input
311M L1	V9AD	81	80x74 DIN 5482	270	335 H7	314	M16 n°8	—	5	30	8.5	40	—	—	60°	30°	D
311M L2	V9AB	51	58x53 DIN 5482	195	236 H7	222	M10 n°12	—	4	18	11	22	—	—	45°	22.5°	B
311M L3	V9AA	37	40x36 DIN 5482	140	178 H7	165	M10 n°8	—	4	18	9	18	—	—	45°	45°	A
311M L4	V9AA	37	40x36 DIN 5482	140	178 H7	165	M10 n°8	11	4	—	9	18	65	18	45°	45°	A
311M R3	V9AA	37	40x36 DIN 5482	140	178 H7	165	M10 n°8	11	4	18	9	18	—	—	45°	45°	A
311M R2 (B) (C)	V9AB	45	58x53 DIN 5482	195	236 H7	222	M10 n°12	—	4	18	11	22	—	—	45°	22.5°	B
311M R4	V9AA	37	40x36 DIN 5482	140	178 H7	165	M10 n°8	11	4	—	9	18	37	18	45°	45°	A

3/V 11M L

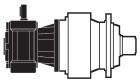

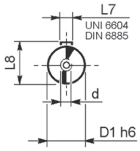

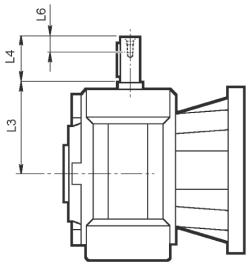

	D1 h6	L3	L4	L6	L7	L8	d
3/V 11M L3_HS	40	214.5	70	20	12	43	M8
3/V 11M L4_HS	25	168	60	19	8	28	M8

Carichi radiali ed assiali ammissibili sull'albero lento per un valore di $Fh_2 : n_2 \cdot h = 100000$

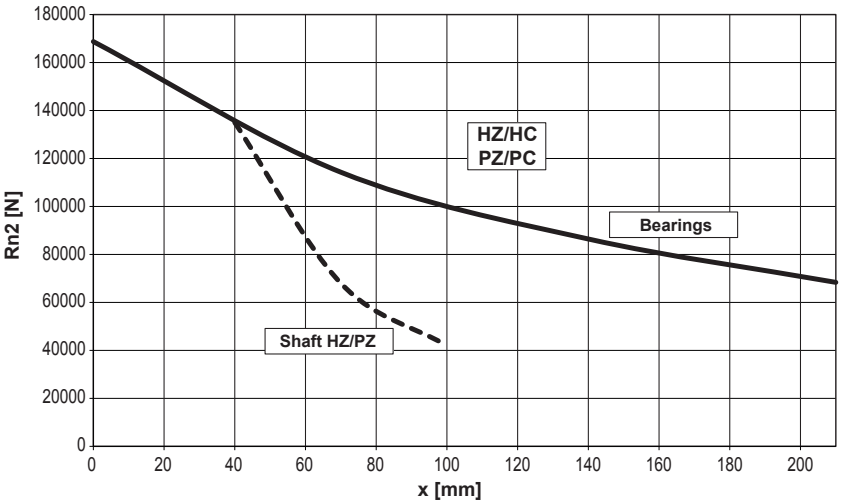

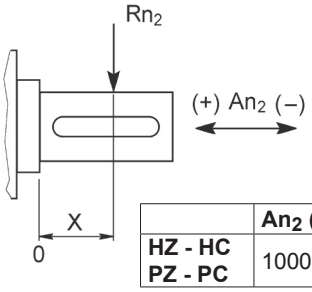

	An_2 (+)	An_2 (-)
HZ - HC PZ - PC	100000	70000

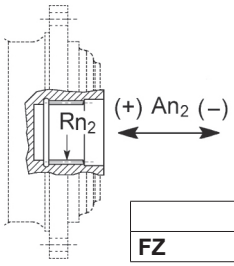

	Rn_2	An_2 (+/-)
FZ	30170	27850

Fattore fh_2 correttivo per carichi sugli alberi	$Fh_2 = n_2 \cdot h$		10000	25000	50000	100000	500000	1000000
	fh_2	FZ	**2.15**	**1.59**	**1.26**	**1.00**	**0.58**	**0.46**
		HC - PC	**1.93**	**1.52**	**1.23**	**1.00**	**0.62**	**0.50**
		HZ - PZ	**1.24**	**1.00**	**1.00**	**1.00**	**0.62**	**0.50**

Carichi radiali ammissibili sull'albero veloce per un valore di $Fh_1 : n_1 \cdot h = 250000$

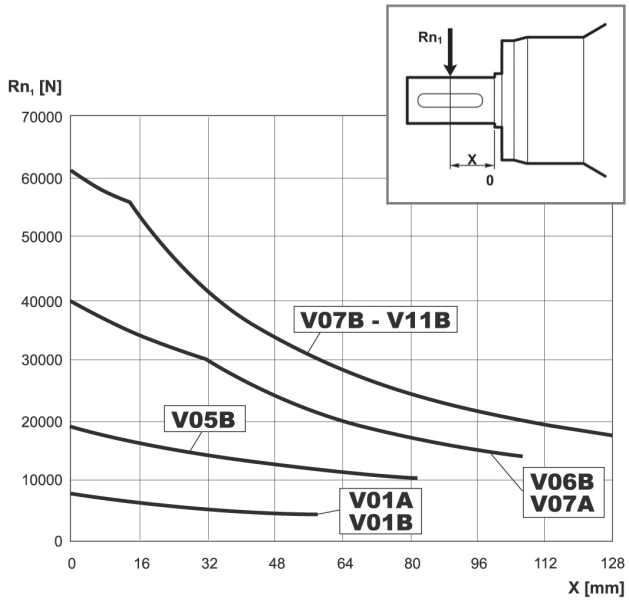

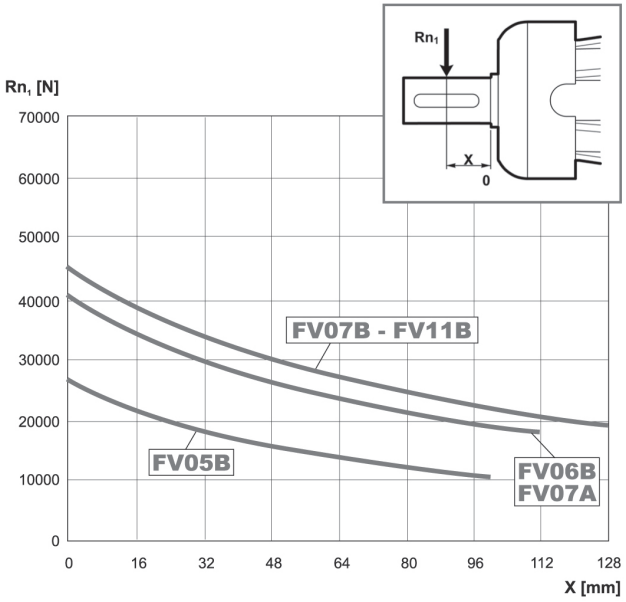

Fattore fh_1 correttivo per carichi sugli alberi	$Fh_1 = n_1 \cdot h$	250000	500000	1000000	2000000	5000000	10000000
	fh_1	**1**	**0.79**	**0.63**	**0.50**	**0.37**	**0.29**

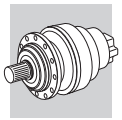

311M VK

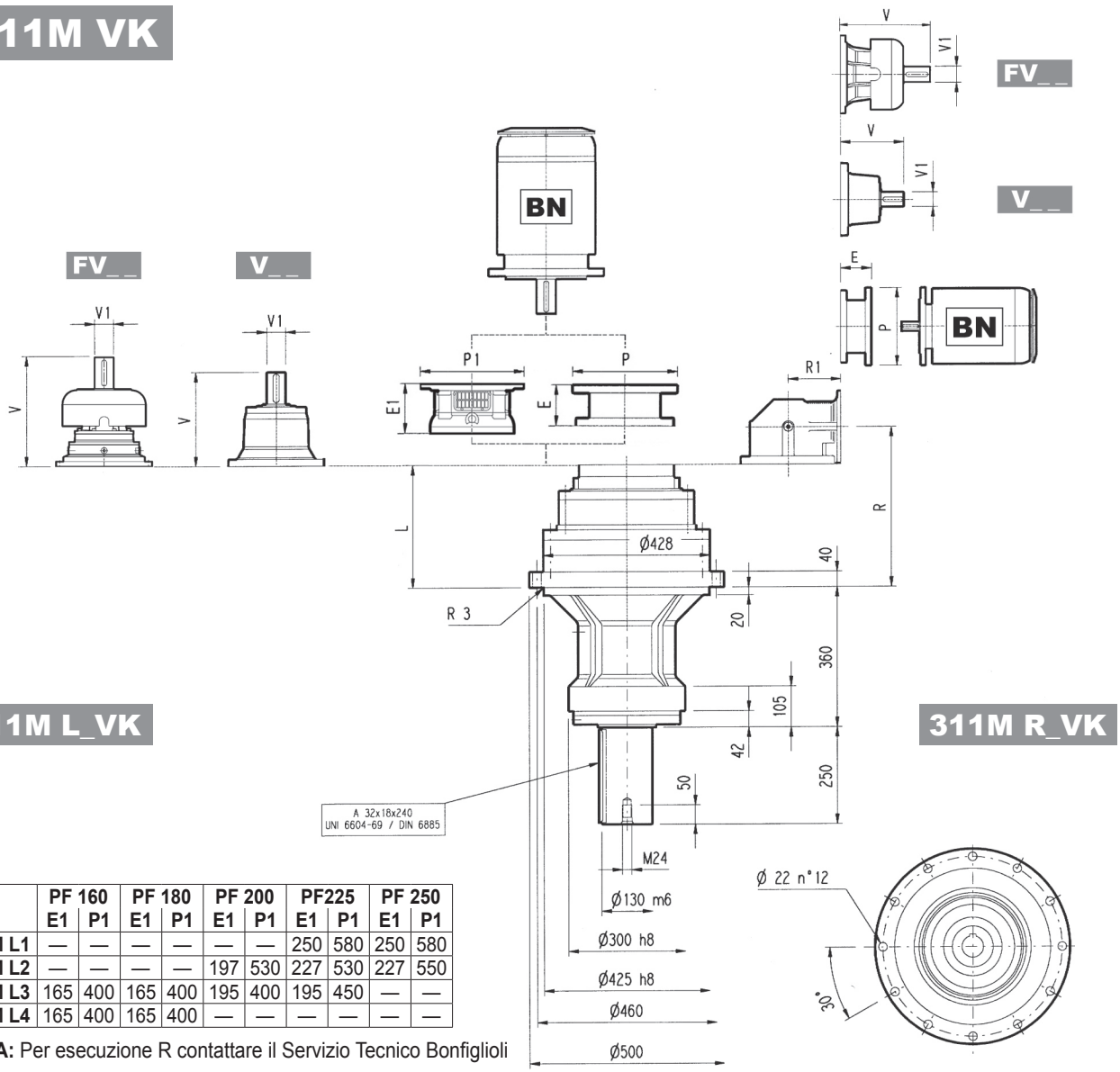

311M L_VK

311M R_VK

	PF 160		PF 180		PF 200		PF225		PF 250	
	E1	P1	E1	P1	E1	P1	E1	P1	E1	P1
311M L1	—	—	—	—	—	—	250	580	250	580
311M L2	—	—	—	—	197	530	227	530	227	550
311M L3	165	400	165	400	195	400	195	450	—	—
311M L4	165	400	165	400	—	—	—	—	—	—

NOTA: Per esecuzione R contattare il Servizio Tecnico Bonfiglioli

	L	Kg	FV__						V__					
			V	V1	Kg	V	V1	Kg	V	V1	Kg	V	V1	Kg
311M L1	129	295	348	80	55	—	—	—	456	80	85	—	—	—
311M L2	262	340	315	80	35	313	60	28	375	80	48	363	60	34
311M L3	351	350	239	48	15	—	—	—	276	48	17	—	—	—
311M L4	416	360	137.5	24	6	158	38	7	—	—	—	—	—	—

	P71		P80		P90		P100		P112		P132		P160		P180		P200		P225		P250	
	E	P	E	P	E	P	E	P	E	P	E	P	E	P	E	P	E	P	E	P	E	P
311M L2	—	—	—	—	—	—	—	—	—	—	—	—	—	—	195	350	186	400	216	450	216	550
311M L3	—	—	—	—	—	—	—	—	—	—	114	300	144	350	144	350	174	400	—	—	—	—
311M L4	65	160	84	200	84	200	94	250	94	250	114	300	144	350	—	—	—	—	—	—	—	—

	R	R1	Kg	FV__						V__					
				V	V1	Kg	V	V1	Kg	V	V1	Kg	V	V1	Kg
311M R2 (B)	354	345	420	307	60	23	—	—	—	357	60	28	—	—	—
311M R2 (C)	354	390	430	307	60	23	—	—	—	357	60	28	—	—	—
311M R3	381	225	385	239	48	15	—	—	—	276	48	17	—	—	—
311M R4	443	140	360	137.5	24	6	158	38	7	—	—	—	—	—	—

	P71		P80		P90		P100		P112		P132		P160		P180		P200		P225		P250	
	E	P	E	P	E	P	E	P	E	P	E	P	E	P	E	P	E	P	E	P	E	P
311M R2 (B)	—	—	—	—	—	—	—	—	—	—	—	—	—	—	152	350	182	400	212	450	193	550
311M R2 (C)	—	—	—	—	—	—	—	—	—	—	—	—	—	—	152	350	182	400	212	450	193	550
311M R3	—	—	—	—	—	—	—	—	—	—	114	300	144	350	144	350	174	400	—	—	—	—
311M R4	65	160	84	200	84	200	94	250	94	250	114	300	144	350	—	—	—	—	—	—	—	—

311M VK

Il diagramma seguente consente di ricavare il carico radiale ammissibile R_{x2} quando questo è applicato alla distanza x dallo spallamento dell'albero lento del riduttore.
Le curve si riferiscono al valore risultante dal rapporto fra il carico assiale A_{n2} e il carico radiale R_{n2}, entrambi riferiti a n_2 = 10 min^{-1} e durata teorica di 10000 h.

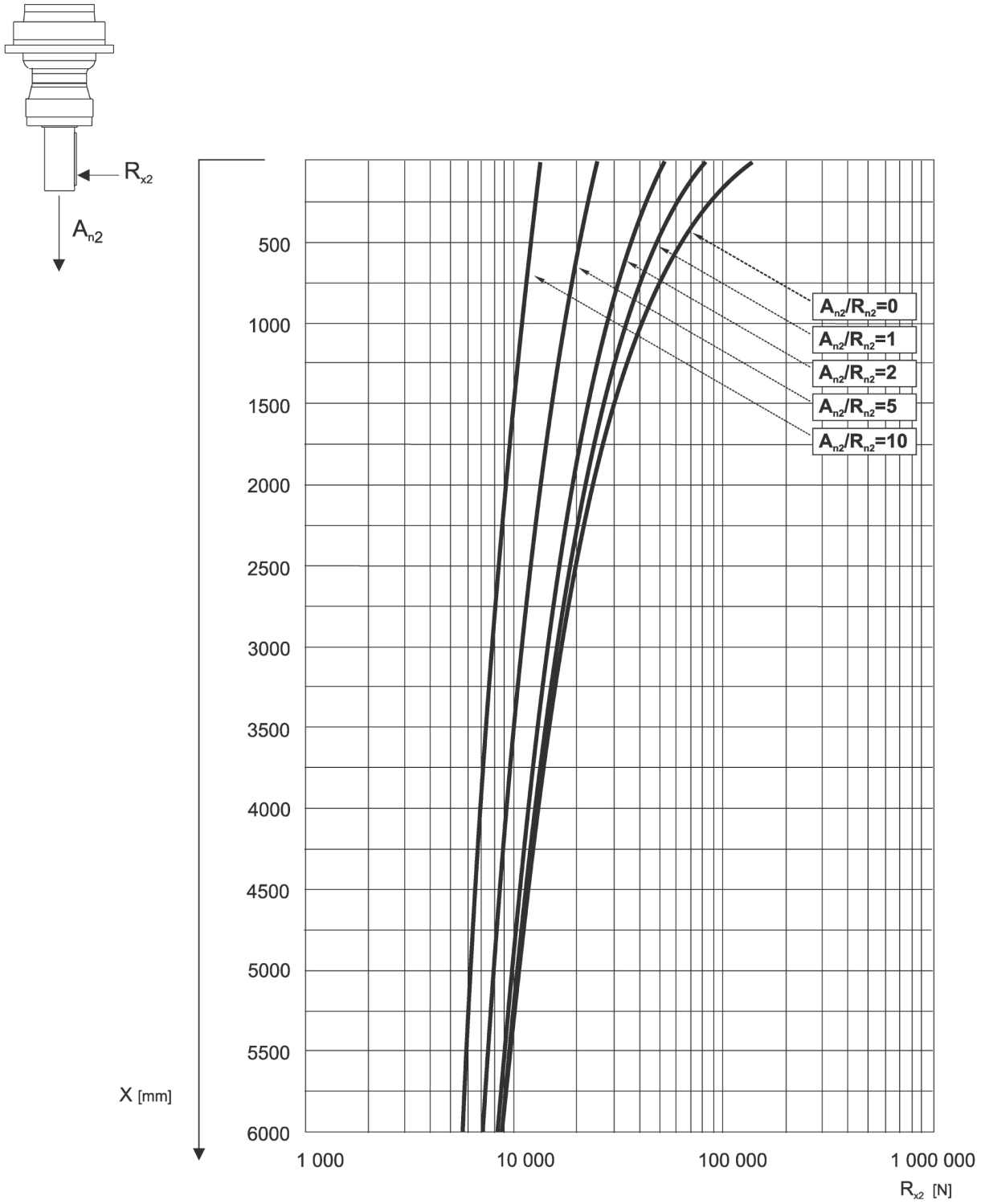

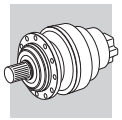

313M L

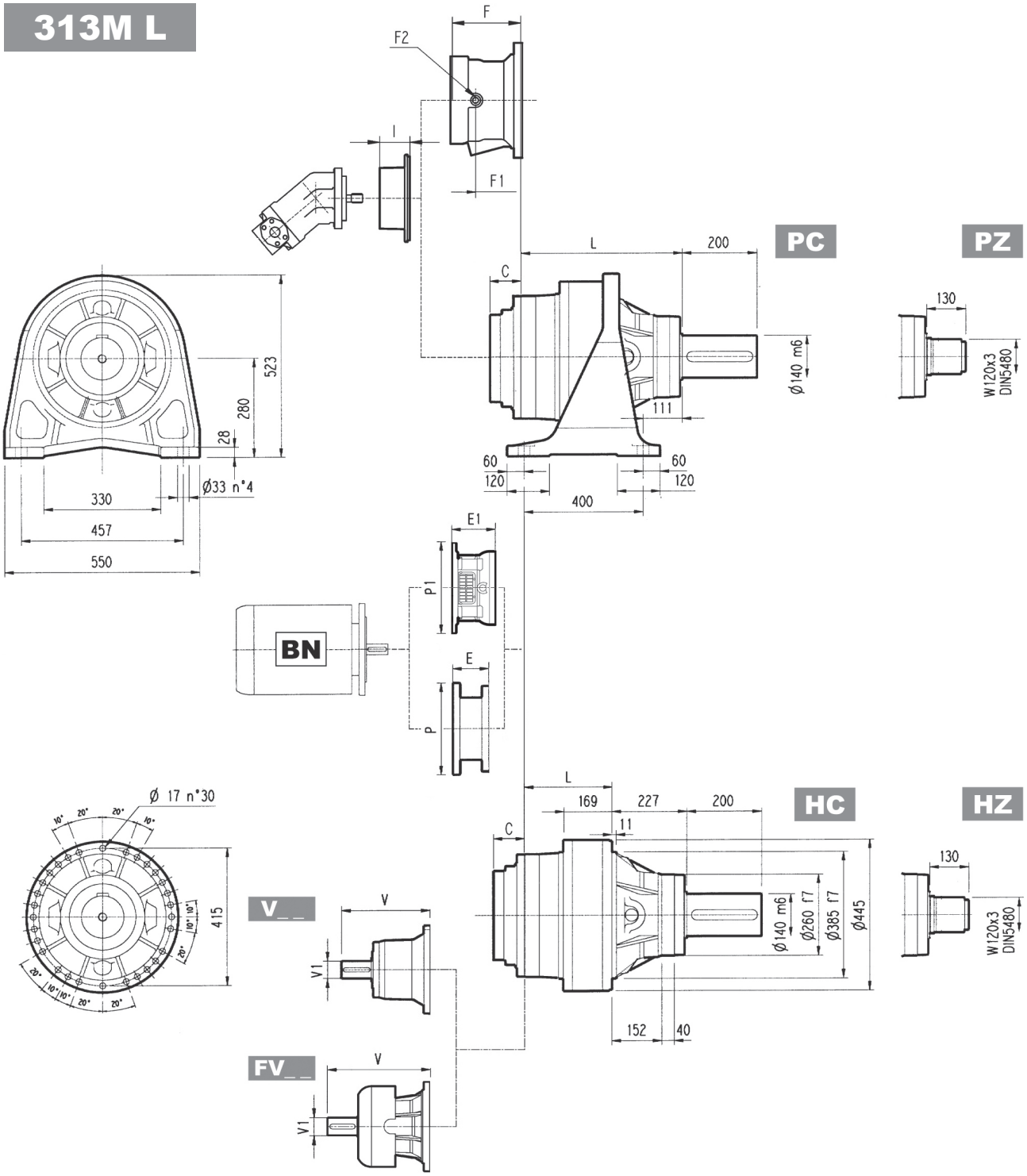

	L				Kg			
	PC - PZ	HC - HZ	FZ - FZP	FP	PC - PZ	HC - HZ	FZ - FZP	FP
313M L1	381	154	154	154	320	230	200	200
313M L2	531	304	304	304	380	290	260	280
313M L3	620	393	393	393	392	302	272	292
313M L4	685	458	458	458	399	309	279	299

	V	V1	Kg	V	V1	Kg	V	V1	Kg	V	V1	Kg	C	Input	I	F	F1	F2	Type	Input	Kg
313M L1	343	80	55	—	—	—	451	80	71	—	—	—	76	D		—	—	—	—	—	—
313M L2	315	80	35	313M	60	28	375	80	48	363	60	34	51	B		201	153	1/4 G	6	B	28
313M L3	239	48	15	—	—	—	276	48	17	—	—	—	37	A		145	95	1/4 G	5	A	16
313M L4	137.5	24	6	158	38	7	—	—	—	—	—	—	37	A	461	105	65	1/4 G	4	A	10

313M L

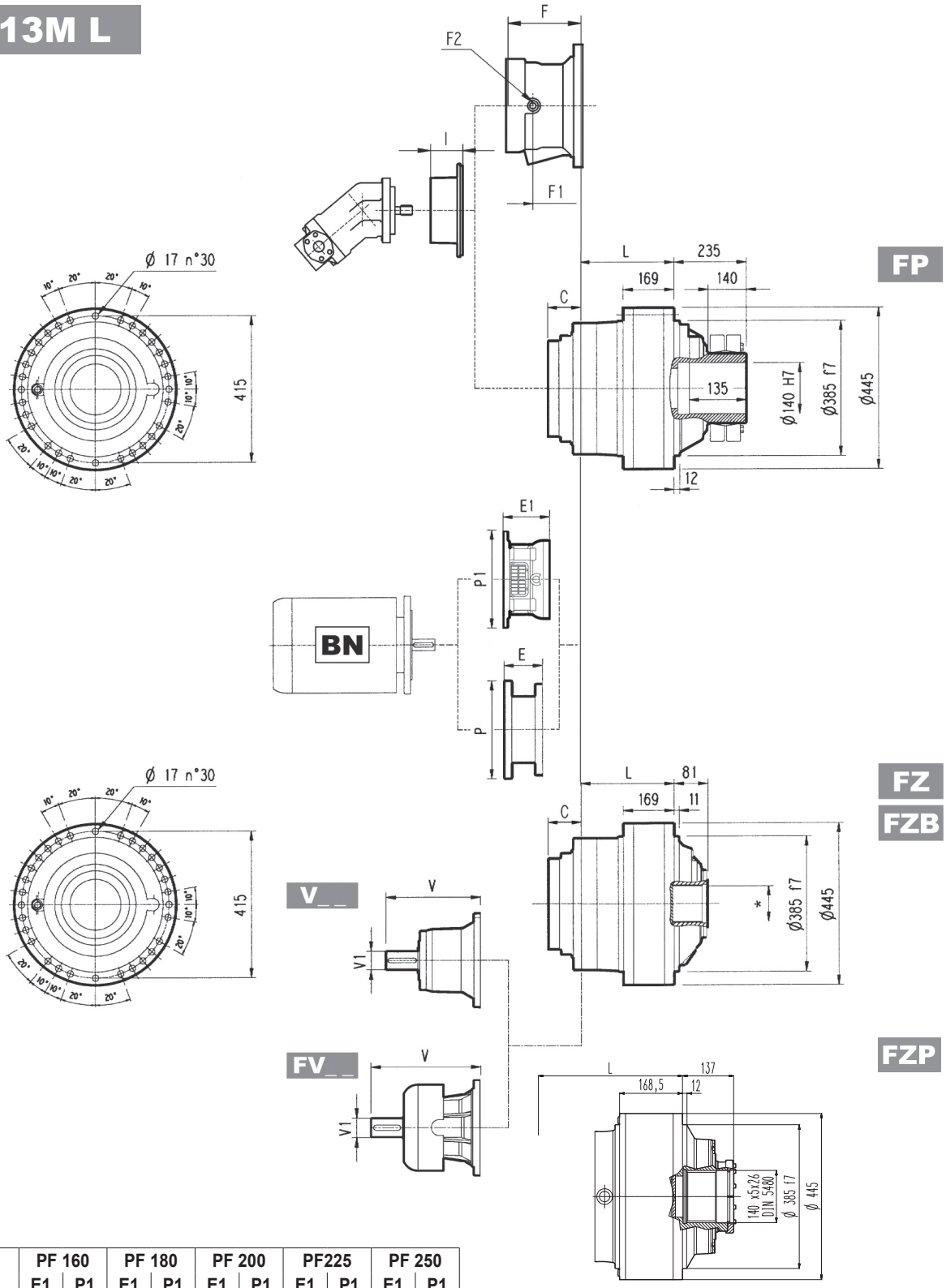

	PF 160		PF 180		PF 200		PF225		PF 250	
	E1	P1	E1	P1	E1	P1	E1	P1	E1	P1
313M L2	—	—	—	—	197	530	227	530	227	550
313M L3	165	400	165	400	195	400	195	450	—	—
313M L4	165	400	165	400	—	—	—	—	—	—

NOTA: Per esecuzione R contattare il Servizio Tecnico Bonfiglioli

* Per dimensioni vedere pag. 368

FP	M_{2max} = 79000 Nm

	P71		P80		P90		P100		P112		P132		P160		P180		P200		P225		P250	
	E	P	E	P	E	P	E	P	E	P	E	P	E	P	E	P	E	P	E	P	E	P
313M L2	—	—	—	—	—	—	—	—	—	—	—	—	—	—	195	350	186	400	216	450	216	550
313M L3	—	—	—	—	—	—	—	—	—	—	114	300	144	350	144	350	174	400	—	—	—	—
313M L4	65	160	84	200	84	200	94	250	94	250	114	300	144	350	—	—	—	—	—	—	—	—

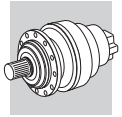

313M R

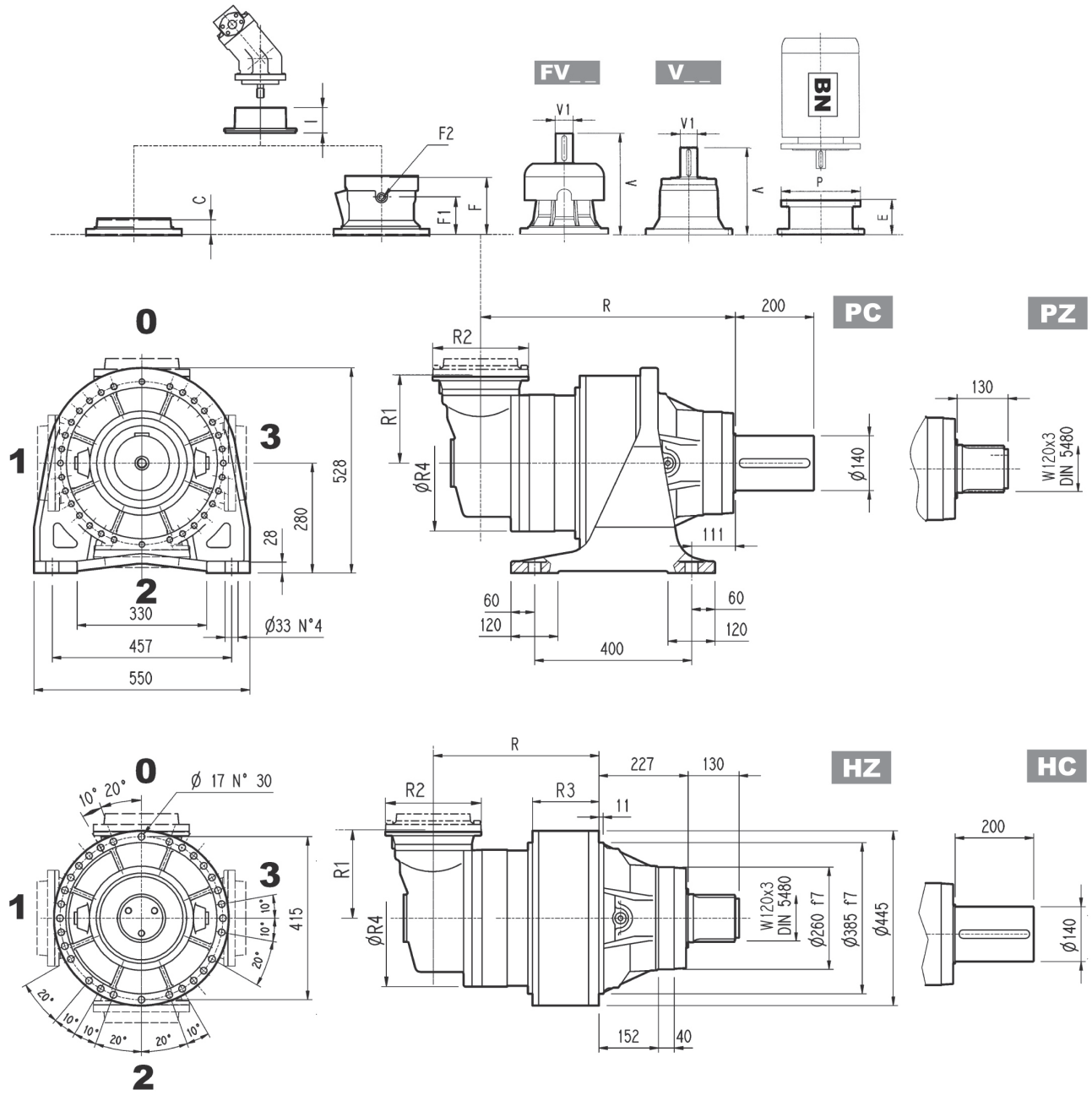

	R				R1	R2	R3			R4	Kg			
	PC-PZ	HC-HZ	FZ - FZP	FP			HC-HZ	FZ	FP		PC-PZ	HC-HZ	FZ - FZP	FP
313M R2 (B)	611	384	384	384	345	292	199	199	199	400	450	360	330	350
313M R2 (C)	611	384	384	384	390	292	168	168	168	480	460	370	340	360
313M R3	650	423	423	423	225	245	169	169	169	345	430	340	310	330
313M R4	712	485	485	485	140	186	169	169	169	244	412	322	292	312

	V	V1	Kg	V	V1	Kg	V	V1	Kg	V	V1	Kg	C	Input	I	F	F1	F2	Type	Input	Kg
313M R2 (B)	307	60	23	—	—	—	357	60	28	—	—	—	45	B		195	147	1/4 G	6	B	28
313M R2 (C)	307	60	23	—	—	—	357	60	28	—	—	—	45	B		195	147	1/4 G	6	B	28
313M R3	239	48	15	—	—	—	276	48	17	—	—	—	37	A	461	145	95	1/4 G	5	A	16
313M R4	137.5	24	6	158	38	7	—	—	—	—	—	—	37	A		105	65	1/4 G	4	A	10

313M R

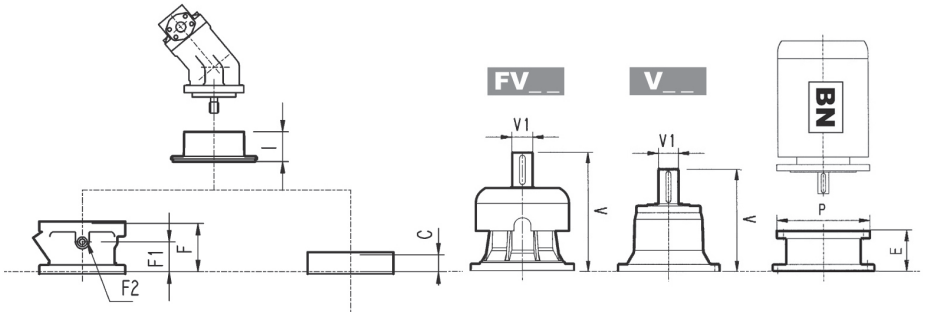

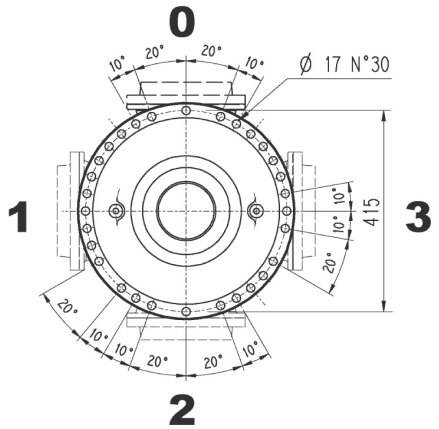

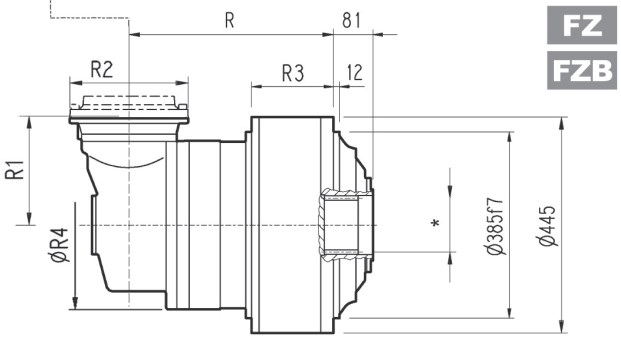

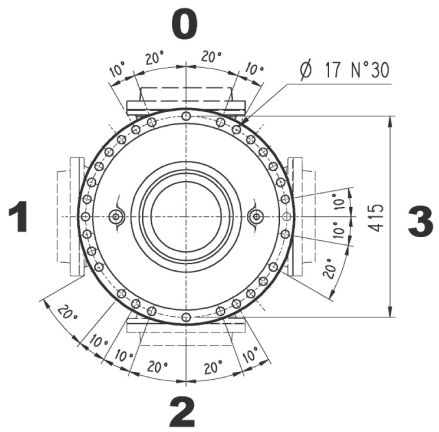

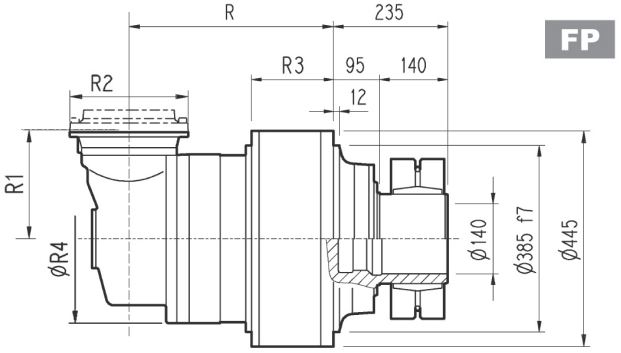

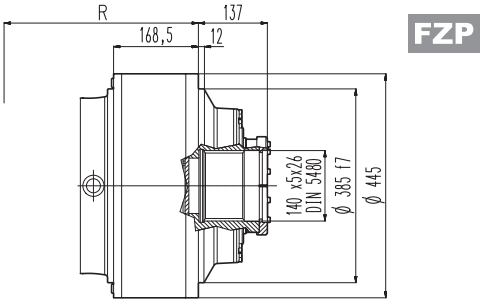

Solo per esecuzione:

R2

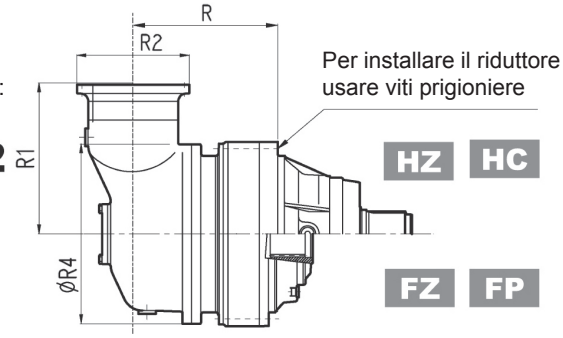

Per installare il riduttore usare viti prigioniere

FP	M_{2max} = 79000 Nm

* Per dimensioni vedere pag. 368

	P71		P80		P90		P100		P112		P132		P160		P180		P200		P225		P250	
	E	P	E	P	E	P	E	P	E	P	E	P	E	P	E	P	E	P	E	P	E	P
313M R2 (B)	—	—	—	—	—	—	—	—	—	—	—	—	—	—	152	350	182	400	212	450	193	550
313M R2 (C)	—	—	—	—	—	—	—	—	—	—	—	—	—	—	152	350	182	400	212	450	193	550
313M R3	—	—	—	—	—	—	—	—	—	—	114	300	144	350	144	350	174	400	—	—	—	—
313M R4	65	160	84	200	84	200	94	250	94	250	114	300	144	350	—	—	—	—	—	—	—	—

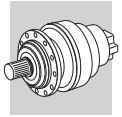

3/V 13M L3

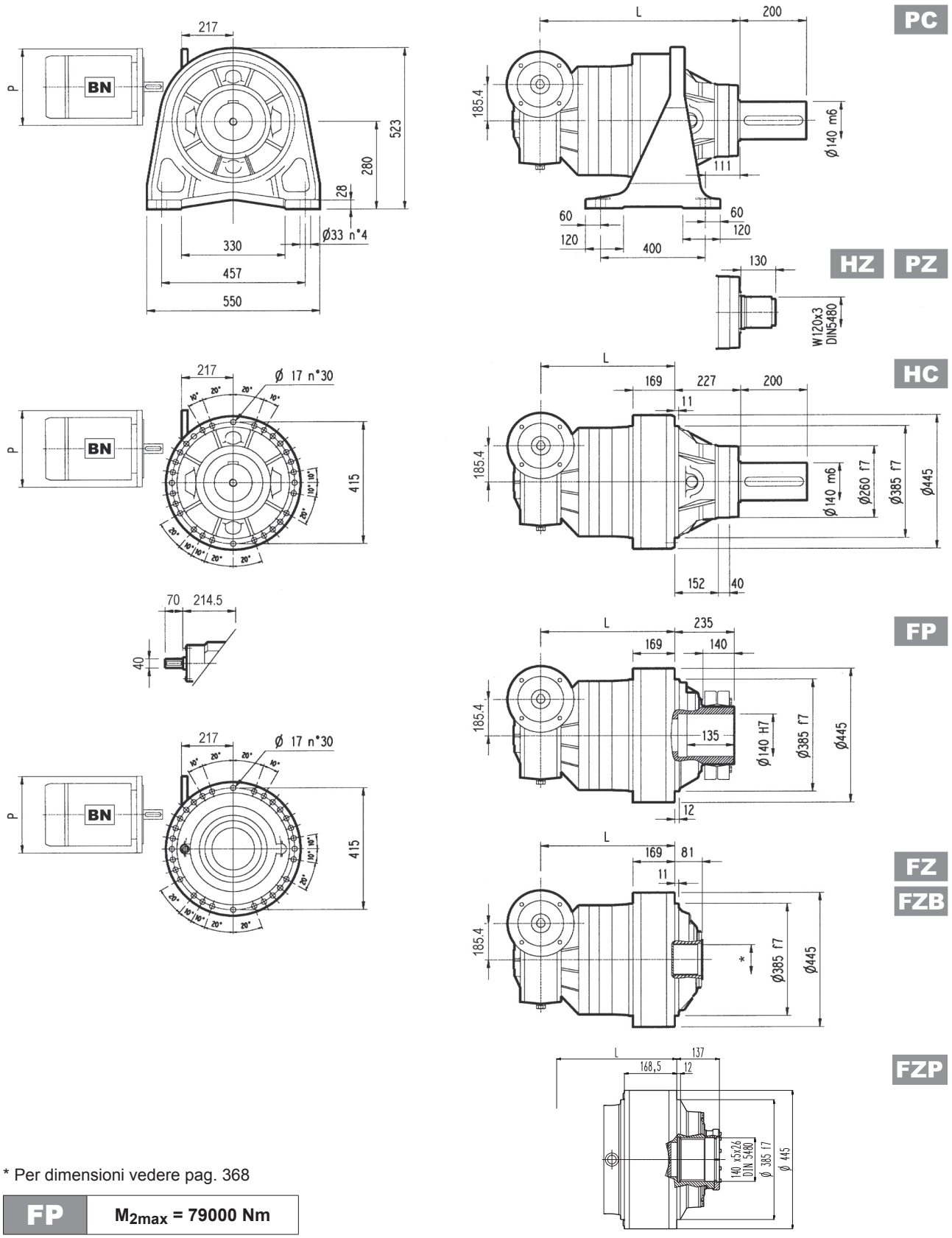

* Per dimensioni vedere pag. 368

FP	M_{2max} = 79000 Nm

	L				Kg				P80	P90	P100	P112	P132	P160	P180
	PC - PZ	HC - HZ	FZ - FZP	FP	PC - PZ	HC - HZ	FZ - FZP	FP	P	P	P	P	P	P	P
3/V 13M L3	732	505	505	505	475	385	355	375	—	—	250	250	300	350	350

3/V 13M L4

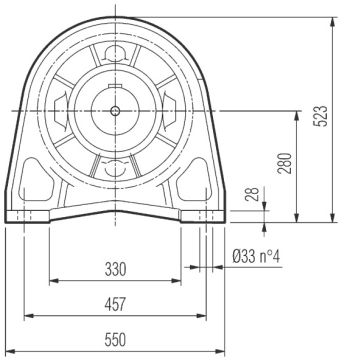

PC

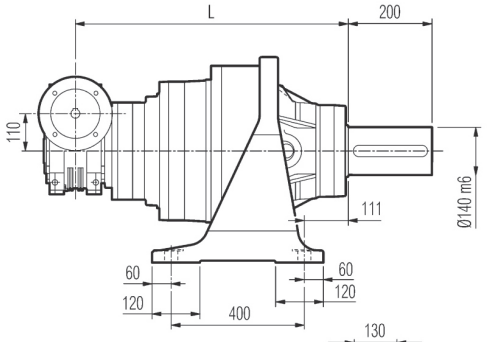

HZ PZ

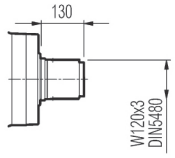

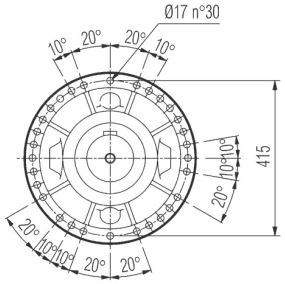

HC

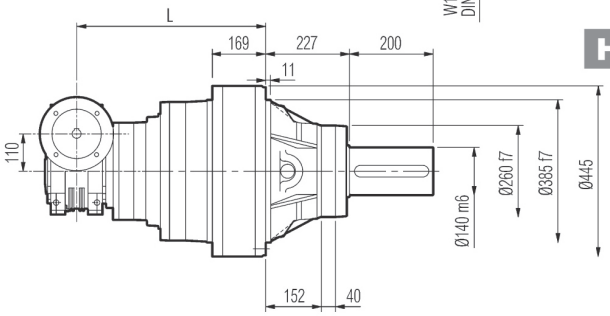

FP

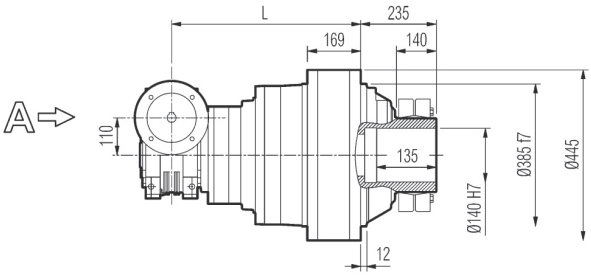

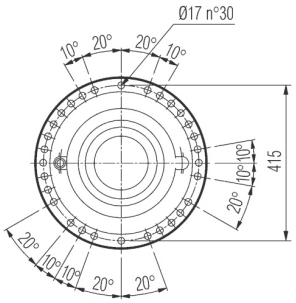

FZ
FZB

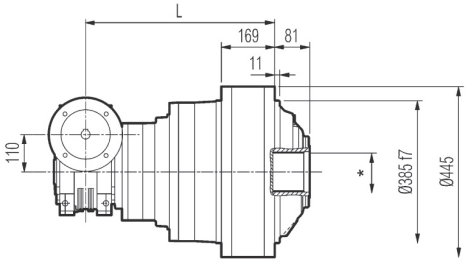

FZP

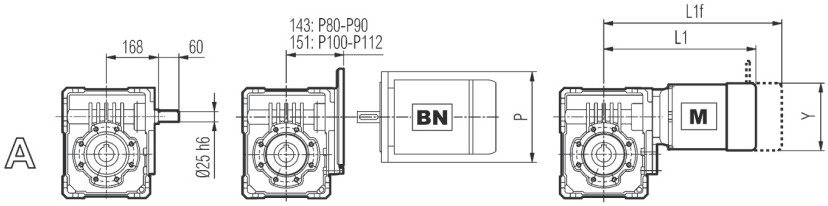

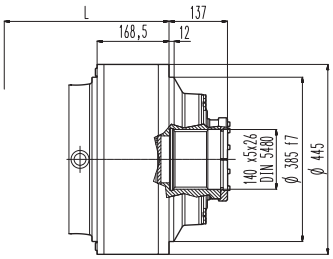

FP	M_{2max} = 79000 Nm

* Per dimensioni vedere pag. 368

	L				Kg			
	PC - PZ	HC - HZ	FZ - FZP	FP	PC - PZ	HC - HZ	FZ - FZP	FP
3/V 13M L4	780	553	553	553	425	335	305	325

	P80	P90	P100	P112	P132	S2 + M2S			S3 + M3S			S3 + M3L		
	P	P	P	P	P	L1	L1f	Y	L1	L1f	Y	L1	L1f	Y
3/V 13M L4	200	200	250	250	300	364	440	156	407	503	193	439	530	193

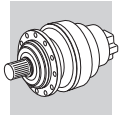

313M L 313M R 3/V 13M L

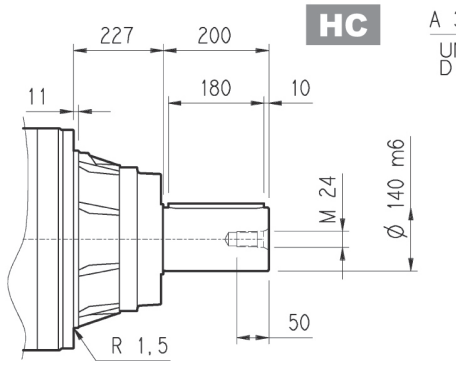

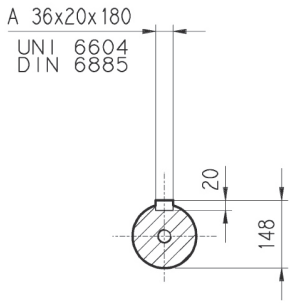

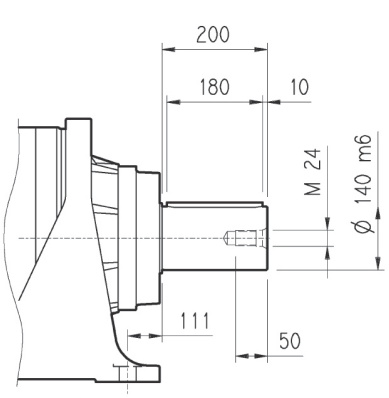

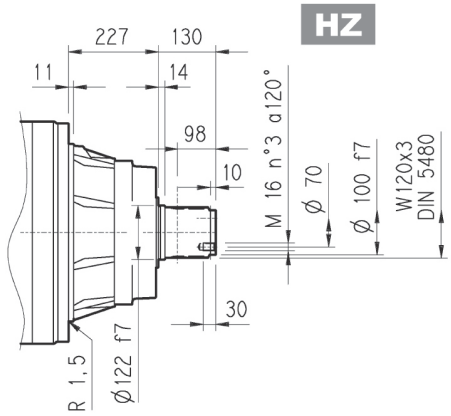

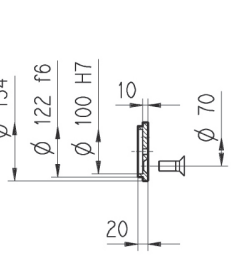

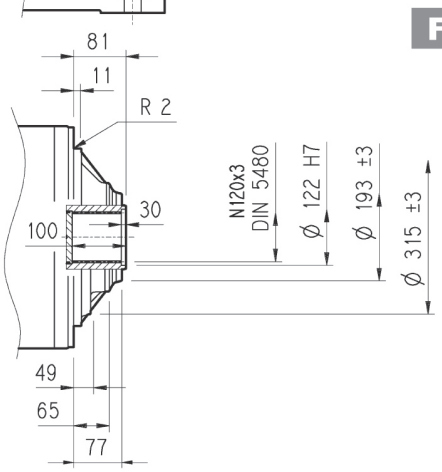

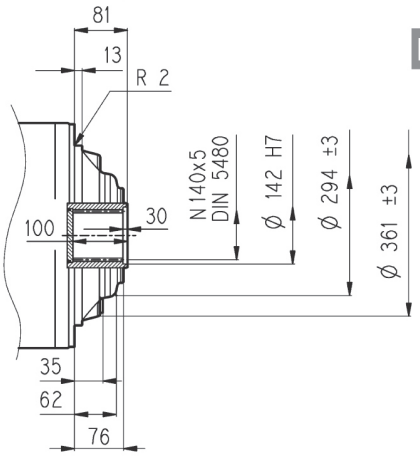

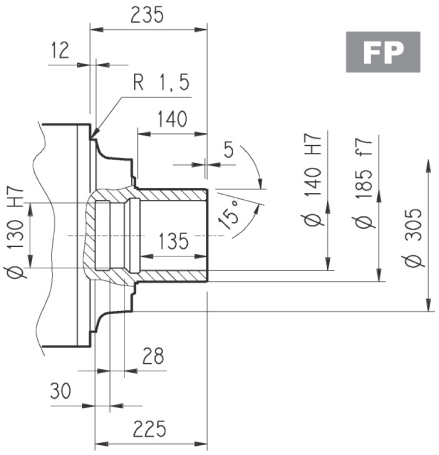

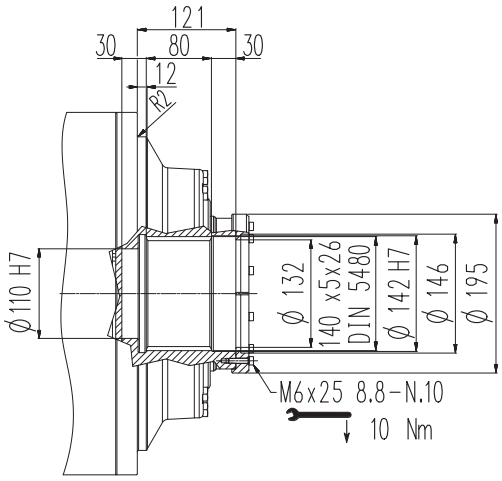

FP	M_{2max} = 79000 Nm

Flangia

W0A

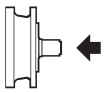

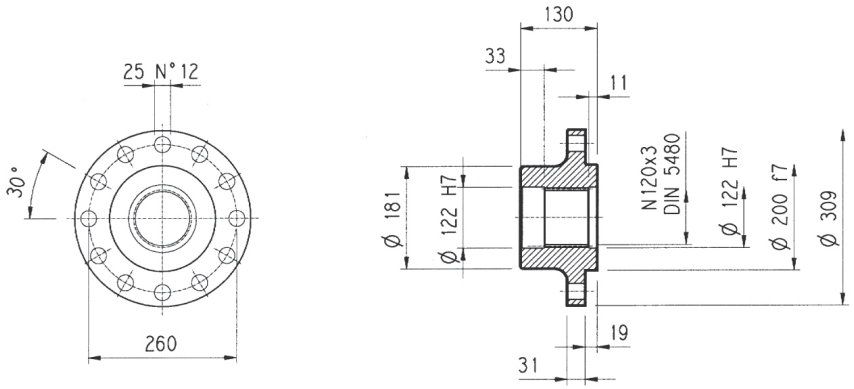

Materiale: Acciaio C40

Pignoni

P...

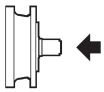

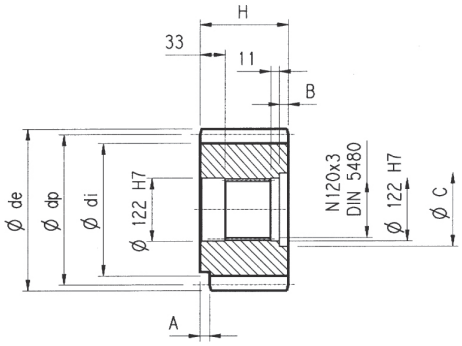

α = 20°

	m	z	x	dp	di	de	H	A	B	C	Materiale
PPH	16	17	0.500	272	247	315	135	—	5	136	Acciaio 39NiCrMo3 Bonificato
PRI	18	18	0.333	324	294	365	140	—	10	140	

Manicotti lisci

M0A

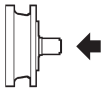

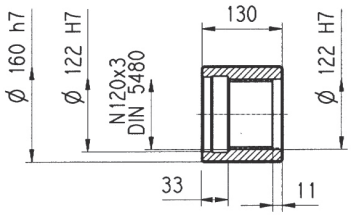

Materiale: Acciaio 16CrNi4

Barre scanalate

B0A

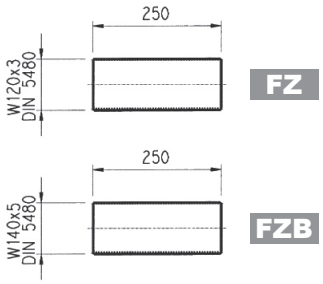

Materiale: Acciaio 18NiCrMo5 UNI 5331
da cementare e temprare 50-55 HRC

Giunto ad attrito

G0A

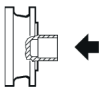

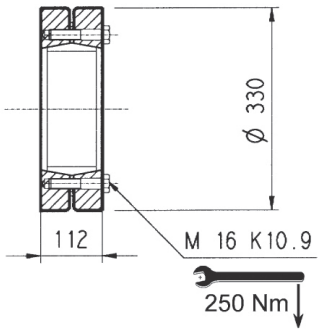

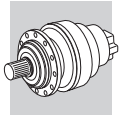

313M L 313M R

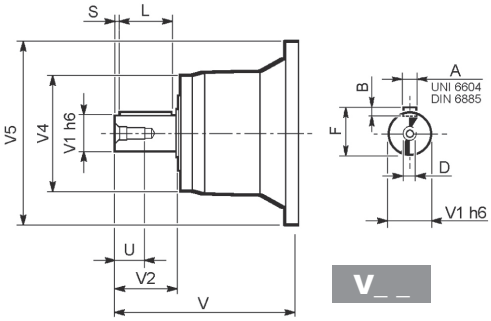

V_ _

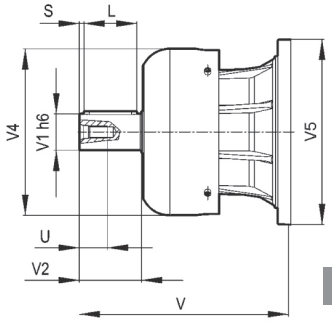

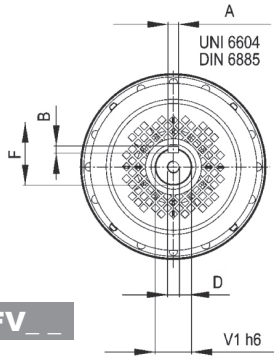

FV_ _

		V	V1	V2	V4	V5	A	B	F	L	S	D	U
313M L1	V11B	343	80	130	200	445	22	14	85	110	10	M16	36
	FV11B	451	80	130	347.5	445	22	14	85	110	10	M16	36
313M L2	V07B	315	80	130	200	345	22	14	85	110	10	M16	36
	FV07B	375	80	130	347.5	348	22	14	85	110	10	M16	36
	V07A	313M	60	105	155	345	18	11	64	90	7.5	M16	36
	FV07A	363	60	105	309	348	18	11	64	90	7.5	M16	36
313M L3	V05B	239	48	82	155	245	14	9	51.5	70	6	M16	36
	FV05B	276	48	82	219.5	244	14	9	51.5	70	6	M16	36
313M L4	V01A	137.5	24	36	120	186	8	7	27	30	3	M8	19
	V01B	158	38	58	120	186	10	8	41	50	4	M12	28
313M R2 (B) (C)	V06B	307	60	105	155	292	18	11	64	90	7.5	M16	36
	FV06B	357	60	105	309	292	18	11	64	90	7.5	M16	36
313M R3	V05B	239	48	82	155	245	14	9	51.5	70	6	M16	36
	FV05B	276	48	82	219.5	244	14	9	51.5	70	6	M16	36
313M R4	V01A	137.5	24	36	120	186	8	7	27	30	3	M8	19
	V01B	158	38	58	120	186	10	8	41	50	4	M12	28

313M L 313M R

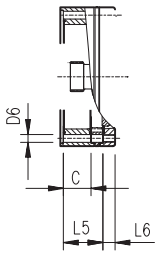

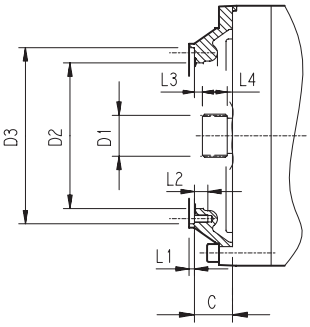

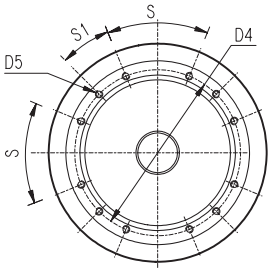

		C	D1	D2	D3	D4	D5	D6	L1	L2	L3	L4	L5	L6	S	S1	Input
313M L1	V9AD	75	80x74 DIN 5482	270	335 H7	314	M16 n°8	—	5	30	9.5	40	—	—	60°	30°	D
313M L2	V9AB	51	58x53 DIN 5482	195	236 H7	222	M10 n°12	—	4	18	11	22	—	—	45°	22.5°	B
313M L3	V9AA	37	40x36 DIN 5482	140	178 H7	165	M10 n°8	—	4	18	9	18	—	—	45°	45°	A
313M L4	V9AA	37	40x36 DIN 5482	140	178 H7	165	M10 n°8	11	4	—	9	18	65	18	45°	45°	A
313M R3	V9AA	37	40x36 DIN 5482	140	178 H7	165	M10 n°8	11	4	18	9	18	—	—	45°	45°	A
313M R2 (B) (C)	V9AB	45	58x53 DIN 5482	195	236 H7	222	M10 n°12	—	4	18	11	22	—	—	45°	22.5°	B
313M R4	V9AA	37	40x36 DIN 5482	140	178 H7	165	M10 n°8	11	4	—	9	18	37	18	45°	45°	A

3/V 13M L

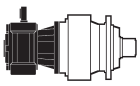

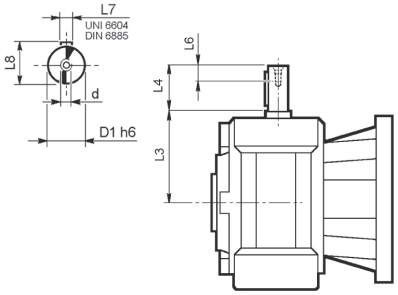

	D1 h6	L3	L4	L6	L7	L8	d
3/V 13M L3_HS	40	214.5	70	20	12	43	M8
3/V 13M L4_HS	25	168	60	19	8	28	M8

313M L 313M R 3/V 13M L

Carichi radiali ed assiali ammissibili sull'albero lento per un valore di $Fh_2 : n_2 \cdot h = 100000$

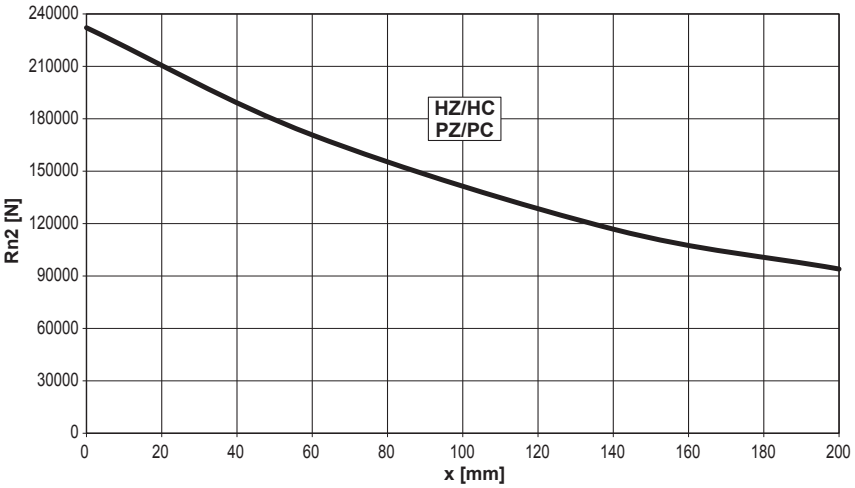

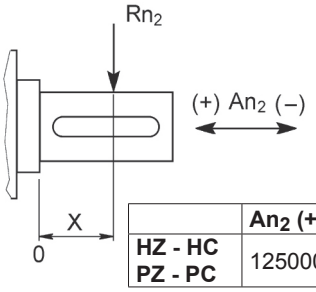

	An_2 (+)	An_2 (-)
HZ - HC PZ - PC	125000	80000

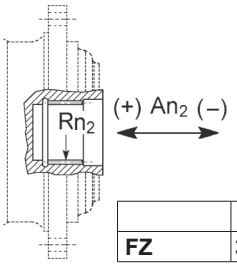

	Rn_2	An_2 (+/-)
FZ	37133	34812

Fattore fh_2 correttivo per carichi sugli alberi	$Fh_2 = n_2 \cdot h$		10000	25000	50000	100000	500000	1000000
	fh_2	FZ	**2.15**	**1.59**	**1.26**	**1.00**	**0.58**	**0.46**
		HZ - HC - PZ - PC	**1.32**	**1.20**	**1.20**	**1.00**	**0.62**	**0.50**

Carichi radiali ammissibili sull'albero veloce per un valore di $Fh_1 : n_1 \cdot h = 250000$

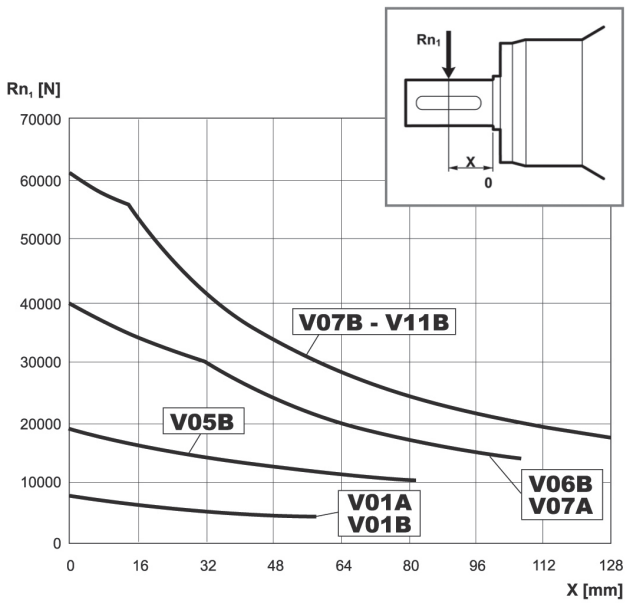

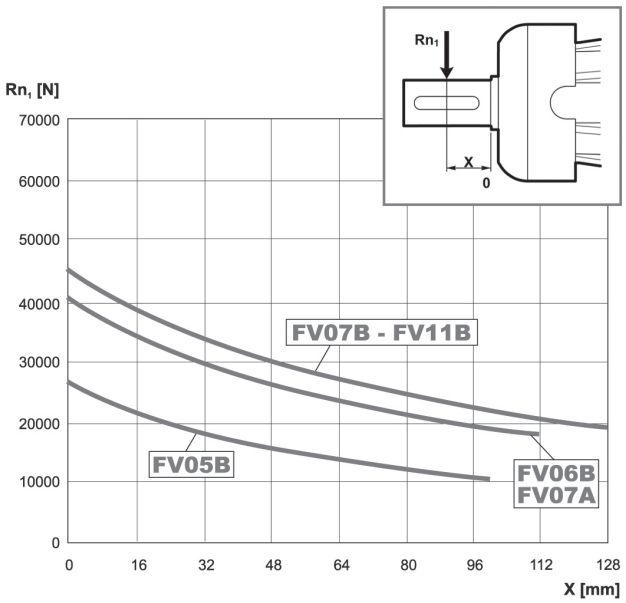

Fattore fh_1 correttivo per carichi sugli alberi	$Fh_1 = n_1 \cdot h$	250000	500000	1000000	2000000	5000000	10000000
	fh_1	**1**	**0.79**	**0.63**	**0.50**	**0.37**	**0.29**

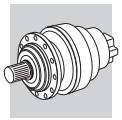

313M VK

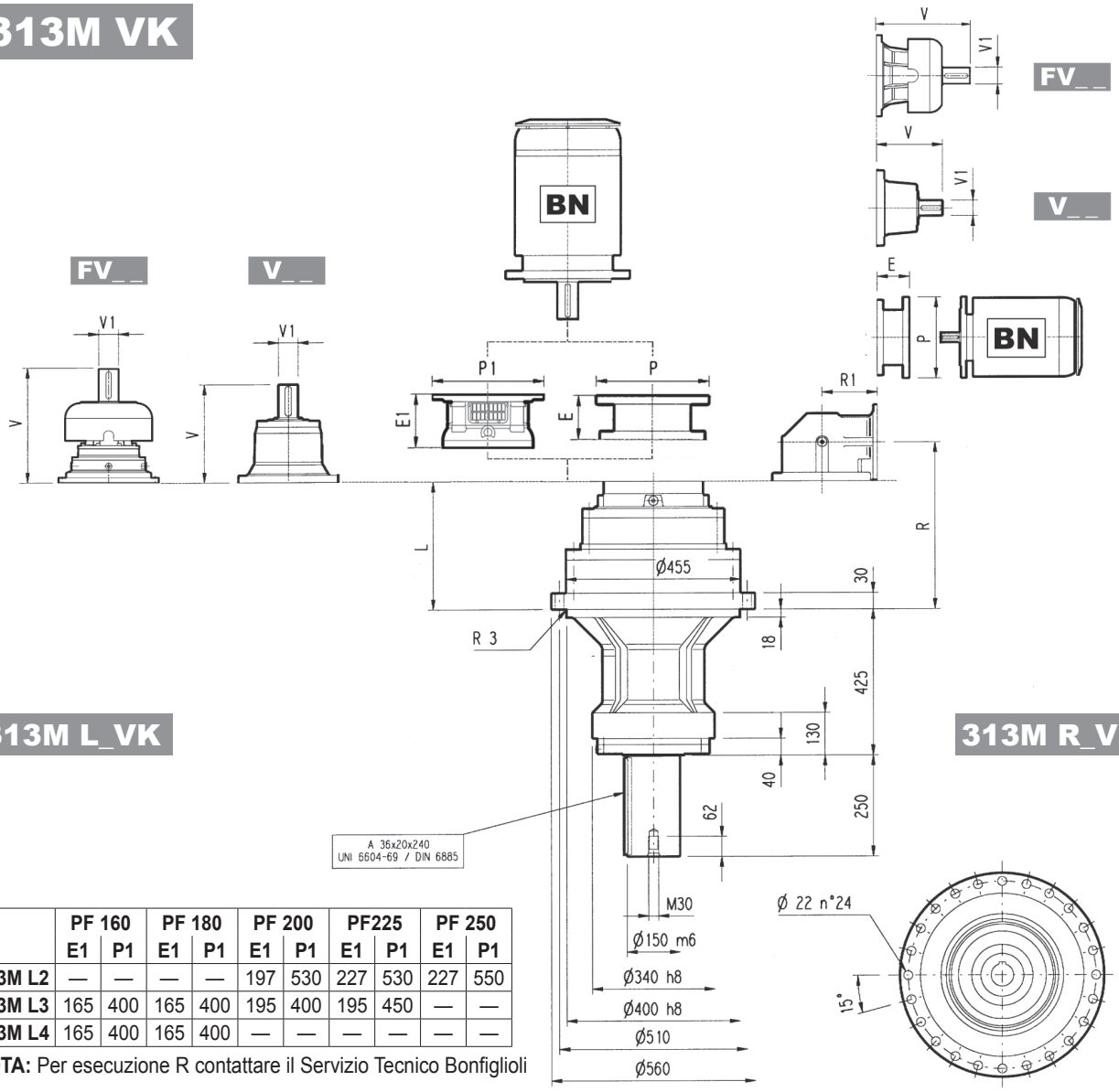

313M L_VK

313M R_VK

	PF 160		PF 180		PF 200		PF225		PF 250	
	E1	P1	E1	P1	E1	P1	E1	P1	E1	P1
313M L2	—	—	—	—	197	530	227	530	227	550
313M L3	165	400	165	400	195	400	195	450	—	—
313M L4	165	400	165	400	—	—	—	—	—	—

NOTA: Per esecuzione R contattare il Servizio Tecnico Bonfiglioli

	L	Kg	V	V1	Kg	V	V1	Kg	V	V1	Kg	V	V1	Kg
313M L1	158	380	343	80	55	—	—	—	451	80	71	—	—	—
313M L2	308	440	315	80	35	313M	60	28	375	80	48	363	60	34
313M L3	397	450	239	48	15	—	—	—	276	48	17	—	—	—
313M L4	462	460	137.5	24	6	158	38	7	—	—	—	—	—	—

	P71		P80		P90		P100		P112		P132		P160		P180		P200		P225		P250	
	E	P	E	P	E	P	E	P	E	P	E	P	E	P	E	P	E	P	E	P	E	P
313M L2	—	—	—	—	—	—	—	—	—	—	—	—	—	—	195	350	186	400	216	450	216	550
313M L3	—	—	—	—	—	—	—	—	—	—	114	300	144	350	144	350	174	400	—	—	—	—
313M L4	65	160	84	200	84	200	94	250	94	250	114	300	144	350	—	—	—	—	—	—	—	—

	R	R1	Kg	V	V1	Kg	V	V1	Kg	V	V1	Kg	V	V1	Kg
313M R2 (B)	388	345	510	307	60	23	—	—	—	357	60	28	—	—	—
313M R2 (C)	388	390	520	307	60	23	—	—	—	357	60	28	—	—	—
313M R3	427	225	490	239	48	15	—	—	—	—	—	—	—	—	—
313M R4	489	140	470	137.5	24	6	158	38	7	—	—	—	—	—	—

	P71		P80		P90		P100		P112		P132		P160		P180		P200		P225		P250	
	E	P	E	P	E	P	E	P	E	P	E	P	E	P	E	P	E	P	E	P	E	P
313M R2 (B)	—	—	—	—	—	—	—	—	—	—	—	—	—	—	152	350	182	400	212	450	193	550
313M R2 (C)	—	—	—	—	—	—	—	—	—	—	—	—	—	—	152	350	182	400	212	450	193	550
313M R3	—	—	—	—	—	—	—	—	—	—	114	300	144	350	144	350	174	400	—	—	—	—
313M R4	65	160	84	200	84	200	94	250	94	250	114	300	144	350	—	—	—	—	—	—	—	—

313M VK

Il diagramma seguente consente di ricavare il carico radiale ammissibile R_{x2} quando questo è applicato alla distanza x dallo spallamento dell'albero lento del riduttore.
Le curve si riferiscono al valore risultante dal rapporto fra il carico assiale A_{n2} e il carico radiale R_{n2}, entrambi riferiti a n_2 = 10 min^{-1} e durata teorica di 10000 h.

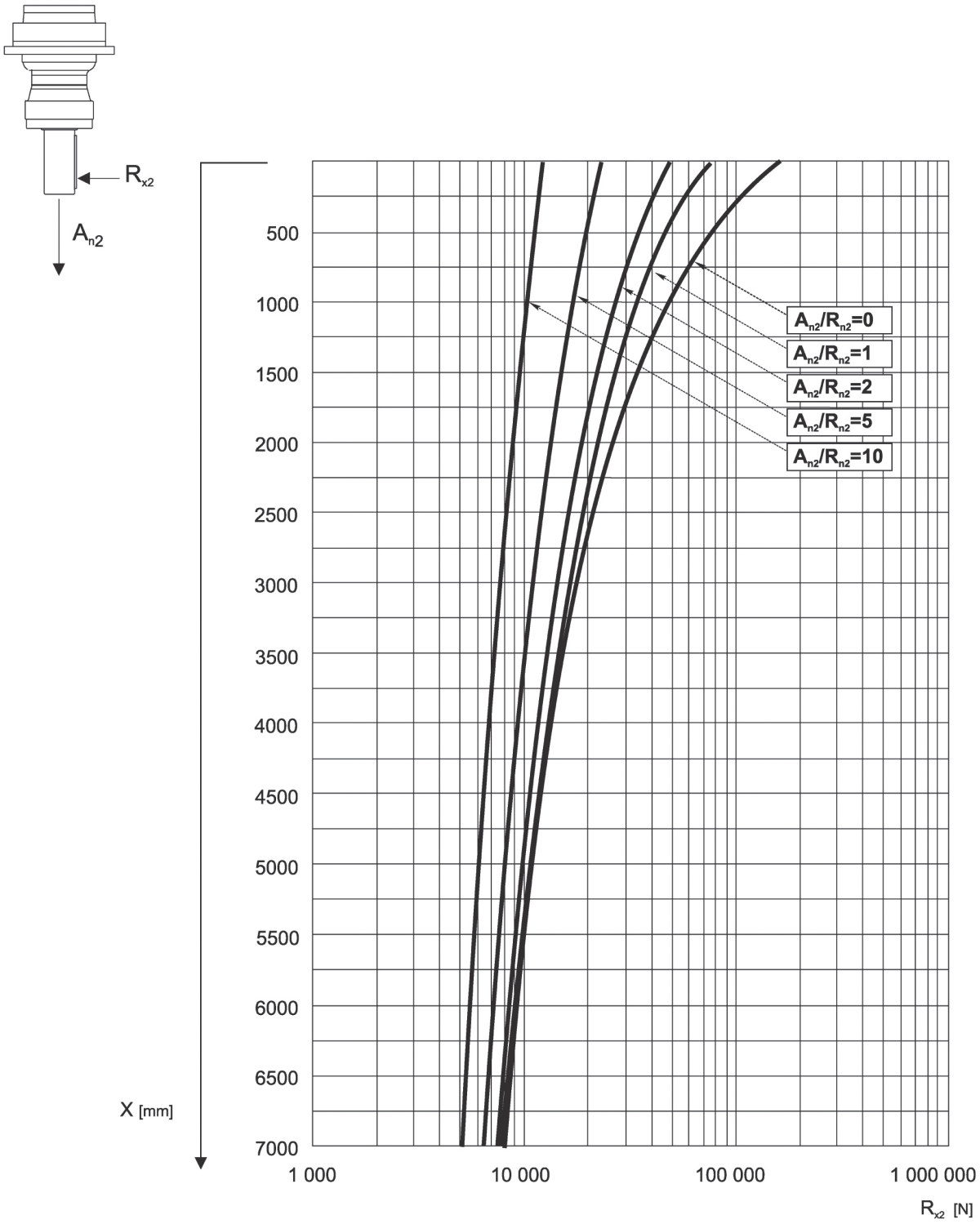

314M L

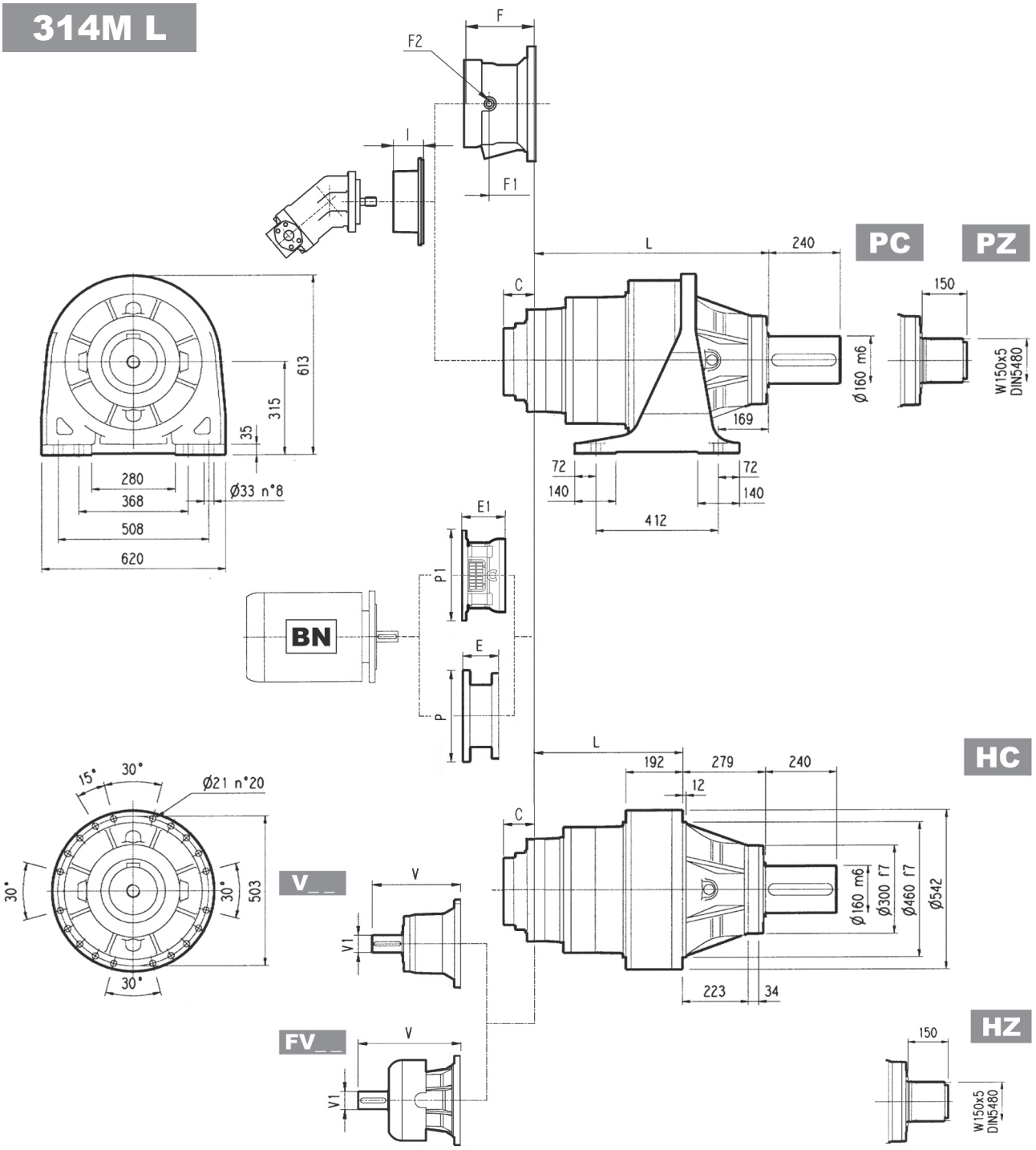

	L				Kg			
	PC - PZ	HC - HZ	FZ - FZP	FP	PC - PZ	HC - HZ	FZ - FZP	FP
314M L1	453	174	174	174	500	370	280	330
314M L2	641	362	362	362	545	415	325	375
314M L3	777	498	498	498	590	460	370	420
314M L4	842	563	563	563	600	470	380	430

	V	V1	Kg	V	V1	Kg	V	V1	Kg	V	V1	Kg	C	Input	I	F	F1	F2	Type	Input	Kg
314M L1	—	—	—	—	—	—	—	—	—	—	—	—	120	L	461	—	—	—	—	—	—
314M L2	377	80	50	—	—	—	457	80	63	—	—	—	88	C		195	147	1/4 G	6	B	28
314M L3	307	60	23	—	—	—	357	60	28	—	—	—	45	B		145	95	1/4 G	5	B	16
314M L4	239	48	15	—	—	—	276	48	17	—	—	—	37	A		105	65	1/4 G	5	A	10

314M L

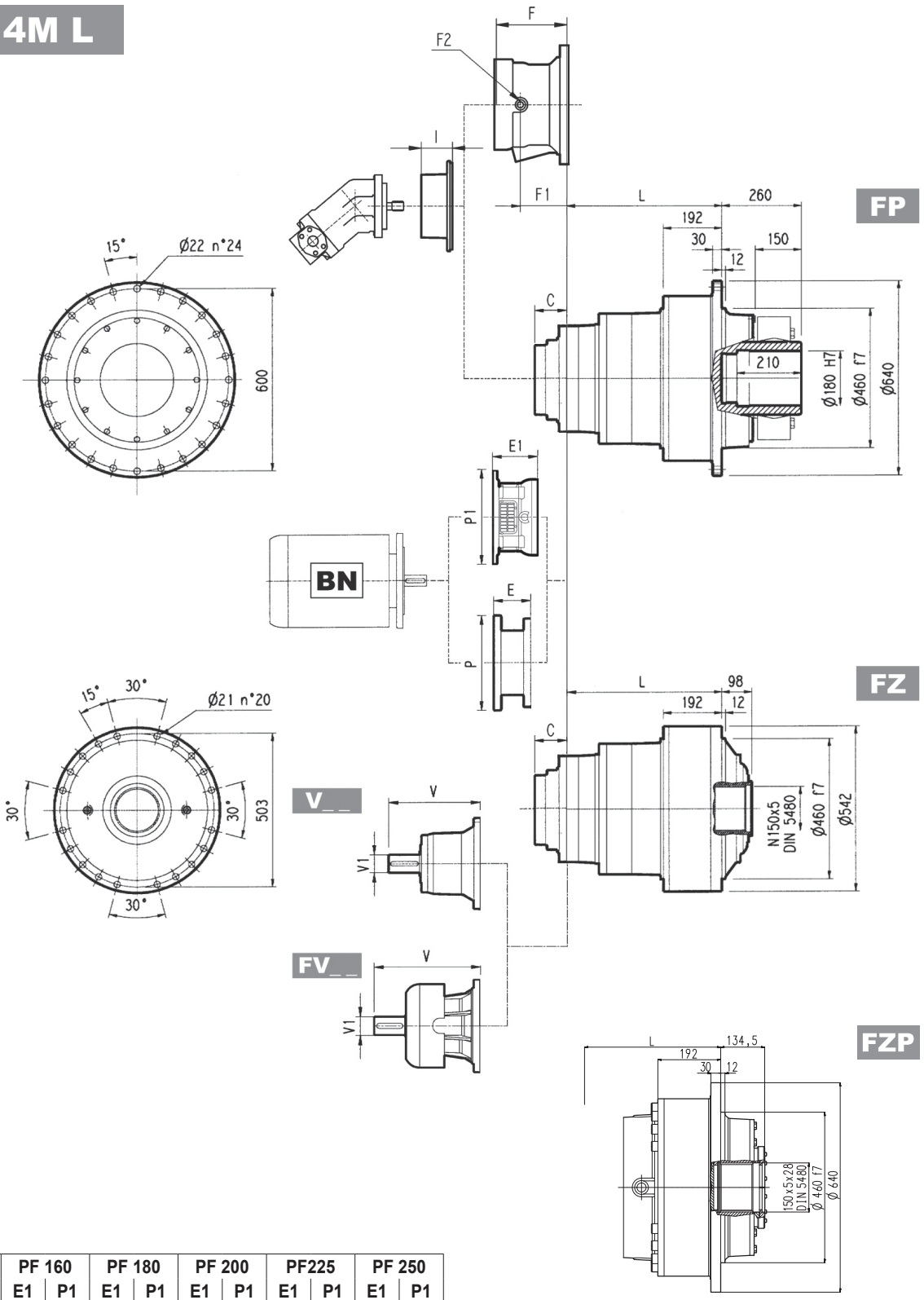

	PF 160		PF 180		PF 200		PF225		PF 250	
	E1	P1	E1	P1	E1	P1	E1	P1	E1	P1
314M L2	—	—	—	—	—	—	254	550	254	550
314M L3	—	—	167	390	197	400	197	450	207	550
314M L4	165	400	165	400	195	400	197	450	—	—

NOTA: Per esecuzione R contattare il Servizio Tecnico Bonfiglioli

FP	M_{2max} = 115000 Nm

	P132		P160		P180		P200		P225		P250	
	E	P	E	P	E	P	E	P	E	P	E	P
314M L2	—	—	—	—	—	—	271	400	301	450	281	550
314M L3	—	—	153	350	153	350	183	400	213	450	193	550
314M L4	114	300	144	350	144	350	174	400	—	—	—	—

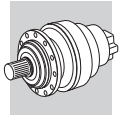

314M R

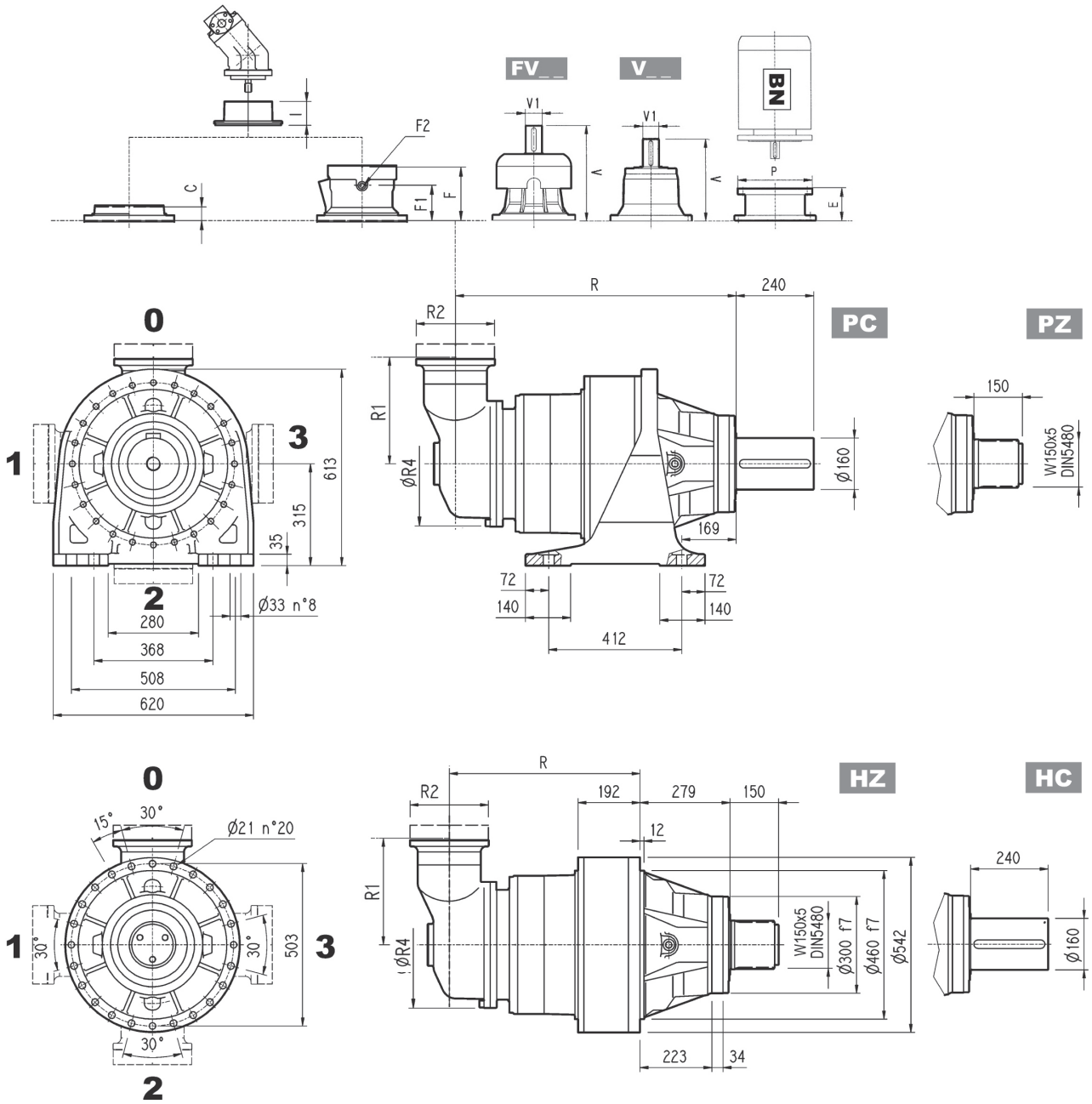

	R				R1	R2	R4	Kg			
	PC-PZ	HC-HZ	FZ - FZP	FP				PC-PZ	HC-HZ	FZ - FZP	FP
314M R3 (B)	848	569	569	569	345	292	400	720	590	500	550
314M R3 (C)	856	587	587	587	390	292	480	730	600	510	560
314M R4	914	635	635	635	140	186	244	680	550	460	510

	V	V1	Kg	V	V1	Kg	V	V1	Kg	V	V1	Kg	C	Input	I	F	F1	F2	Type	Input	Kg
314M R3 (B)	307	60	23	—	—	—	357	60	28	—	—	—	45	B		195	147	1/4 G	6	B	28
314M R3 (C)	307	60	23	—	—	—	357	60	28	—	—	—	45	B		195	147	1/4 G	6	B	28
314M R4	137.5	24	6	158	38	7	—	—	—	—	—	—	37	A	461	105	65	1/4 G	4	A	10

314M R

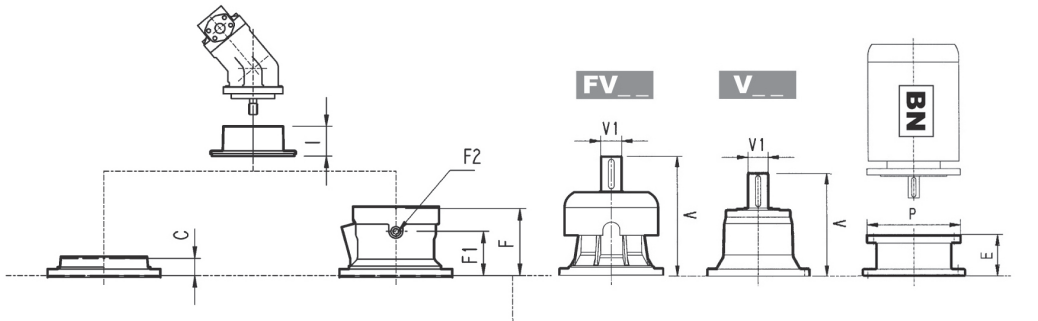

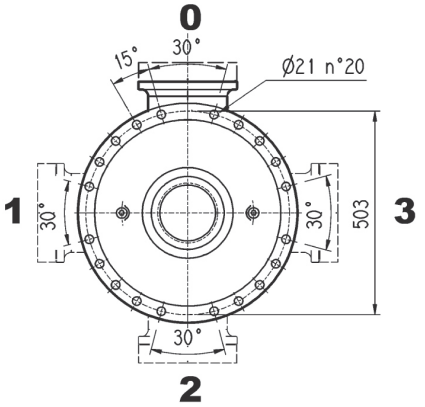

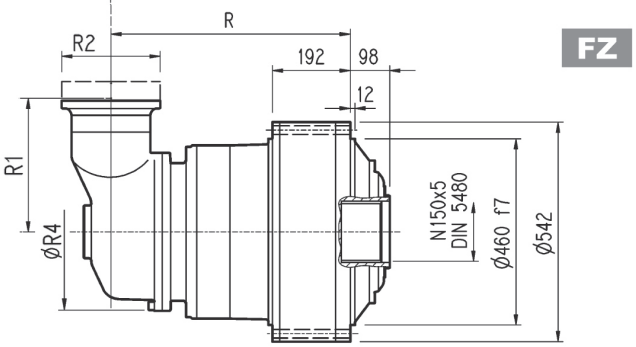

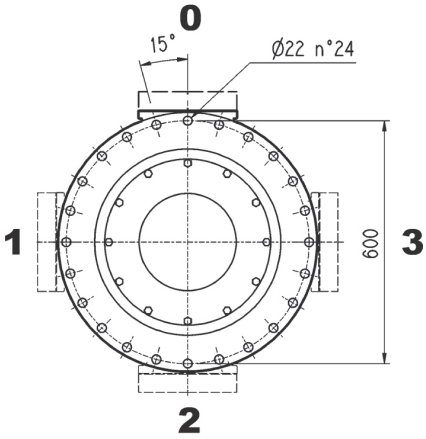

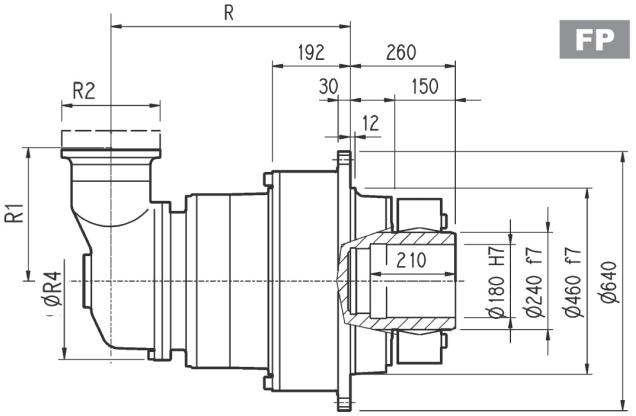

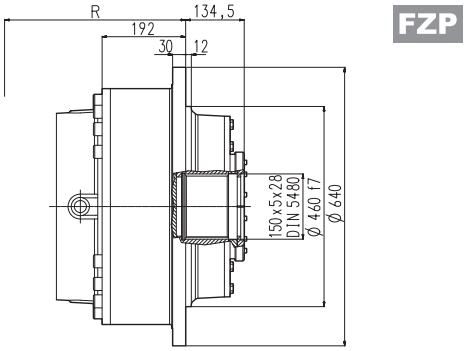

FP	M_{2max} = 115000 Nm

	P71		P80		P90		P100		P112		P132		P160		P180		P200		P225		P250	
	E	P	E	P	E	P	E	P	E	P	E	P	E	P	E	P	E	P	E	P	E	P
314M R3 (B)	—	—	—	—	—	—	—	—	—	—	—	—	—	—	152	350	182	400	212	450	193	550
314M R3 (C)	—	—	—	—	—	—	—	—	—	—	—	—	—	—	152	350	182	400	212	450	193	550
314M R4	65	160	84	200	84	200	94	250	94	250	114	300	144	350	—	—	—	—	—	—	—	—

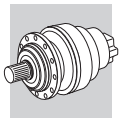

3/V 14M L3

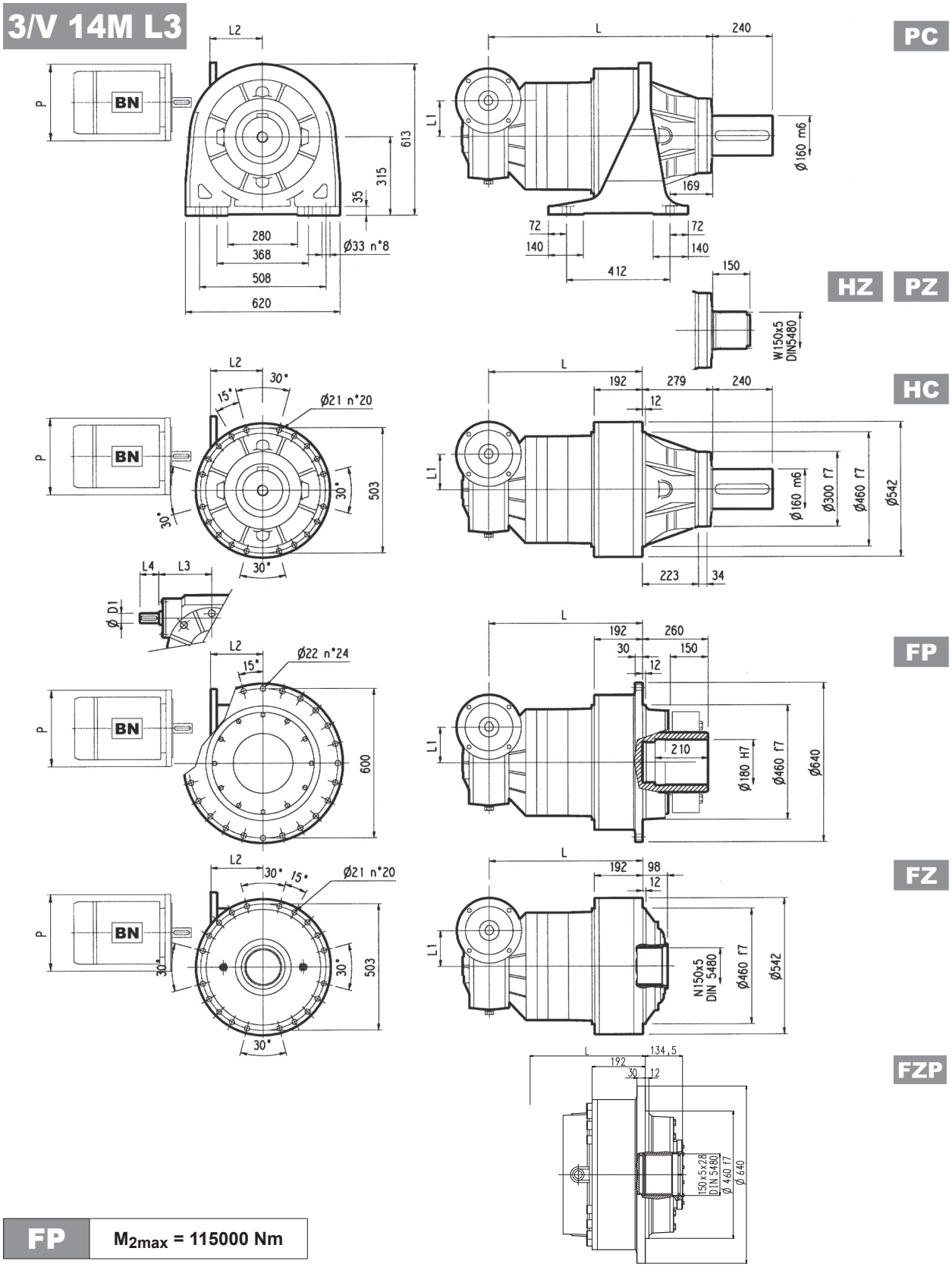

FP	M_{2max} = 115000 Nm

	L				L1	L2	D1	L3	L4	Kg			
	PC - PZ	HC - HZ	FZ - FZP	FP						PC - PZ	HC - HZ	FZ - FZP	FP
3/V 14M L3	920	641	641	641	185	217	40	214.5	70	665	535	445	495

	P100	P112	P132		P160		P180	
	P	P	L2	P	L2	P	L2	P
3/V 14M L3	250	250	—	300	—	350	—	350

3/V 14M L4

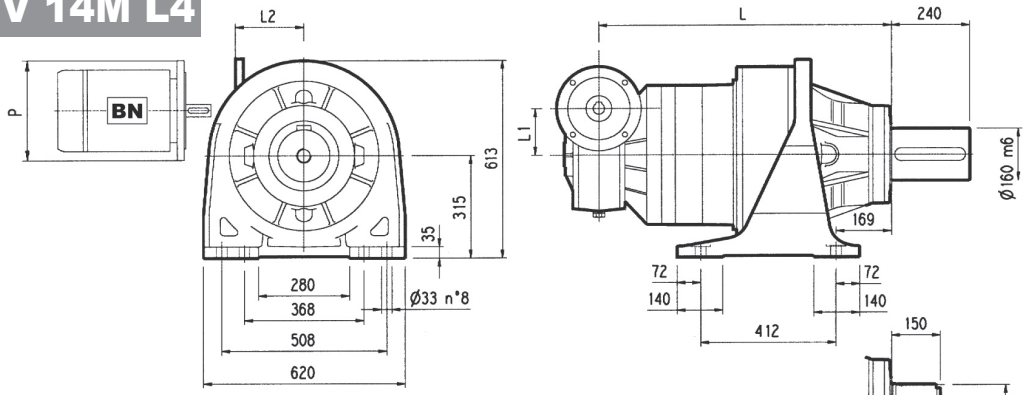

PC

HZ PZ

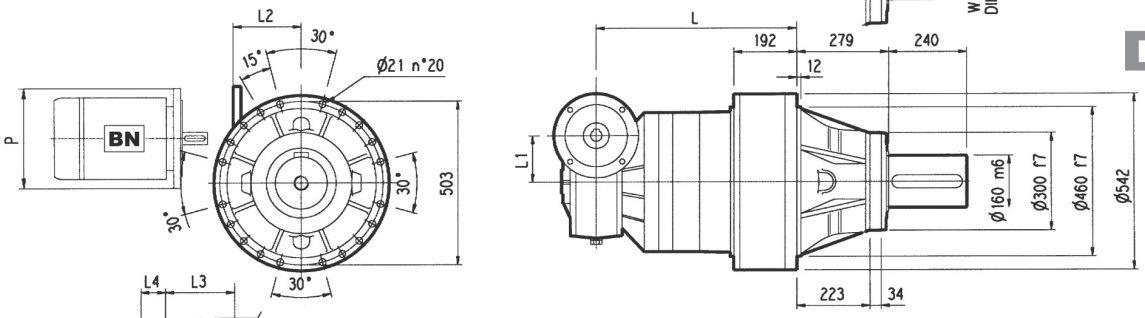

HC

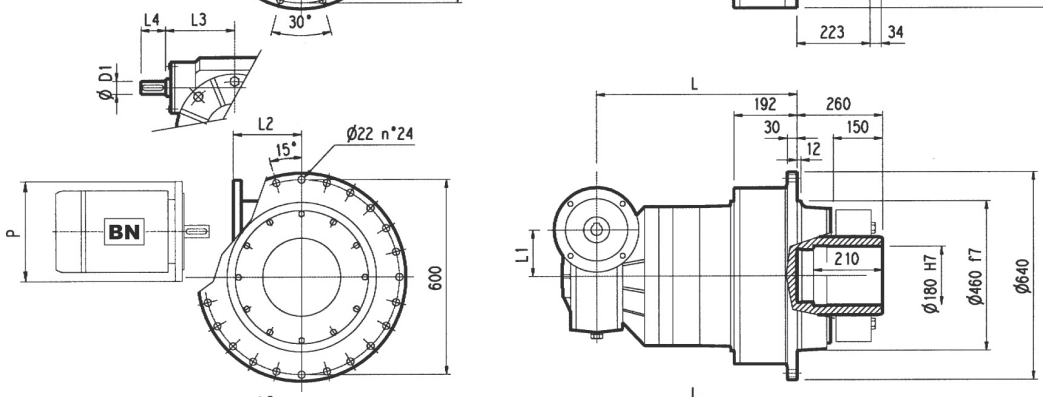

FP

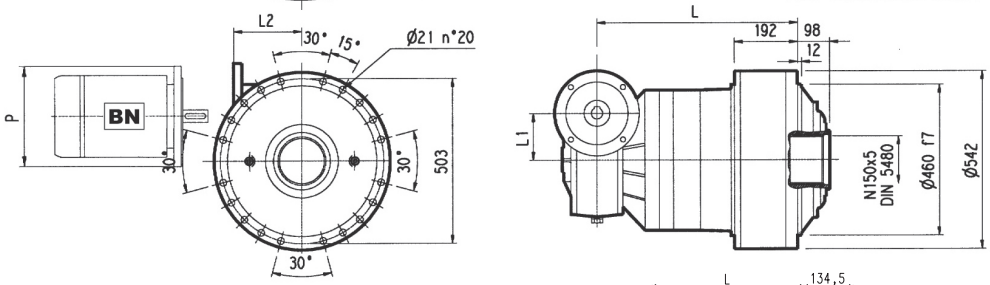

FZ

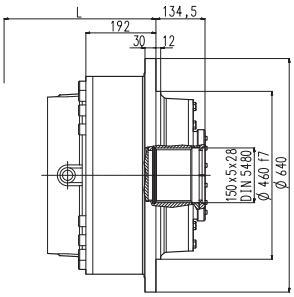

FZP

FP	M_{2max} = 115000 Nm

	L				L1	L2	D1	L3	L4	Kg			
	PC - PZ	HC - HZ	FZ - FZP	FP						PC - PZ	HC - HZ	FZ - FZP	FP
3/V 14M L4	961	682	682	682	150	190	35	185	65	690	560	470	520

	P100	P112	P132		P160		P180	
	P	P	L2	P	L2	P	L2	P
3/V 14M L4	250	250	—	300	—	350	—	—

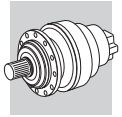

314M L 314M R 3/V 14M L

HC

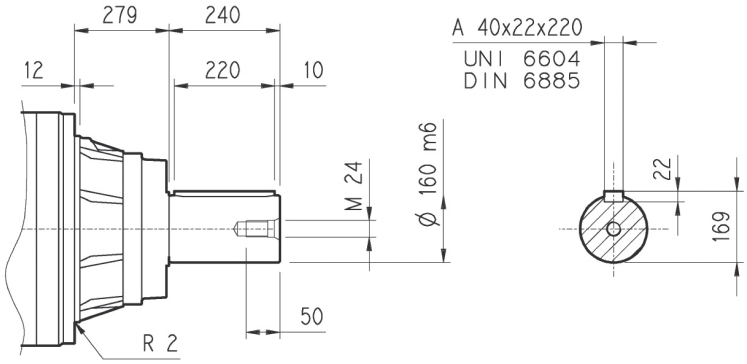

PC

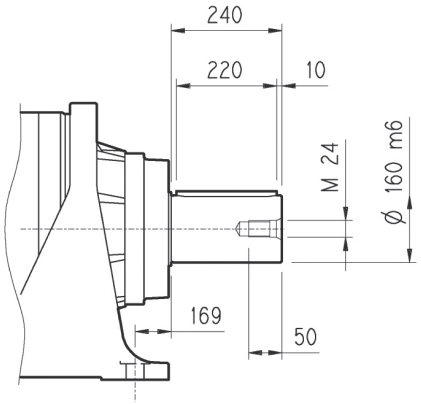

HZ

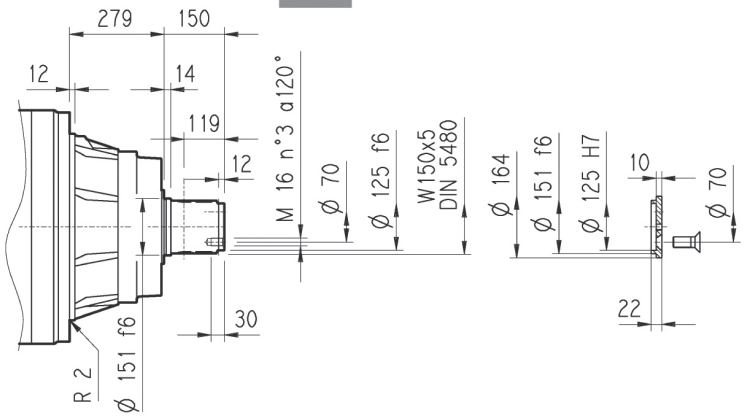

FZ

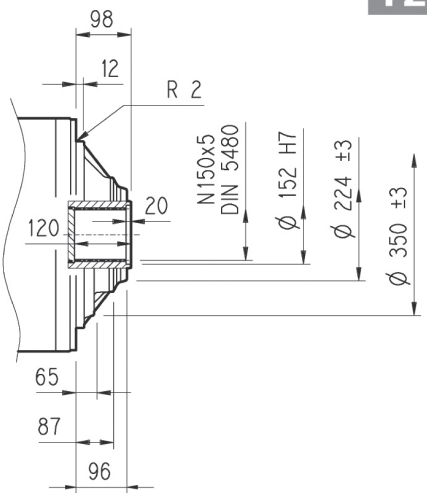

FP

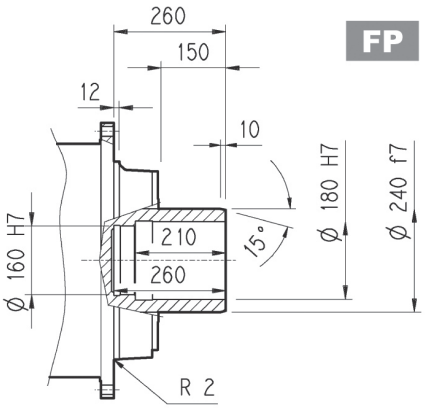

FZP

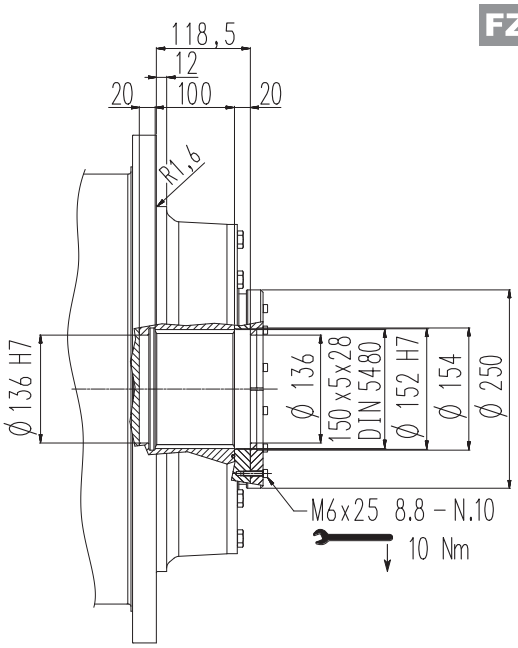

FP	M_{2max} = 115000 Nm

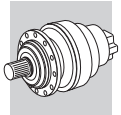

314M L | 314M R | 3/V 14M L

Flangia

W0A

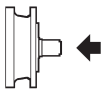

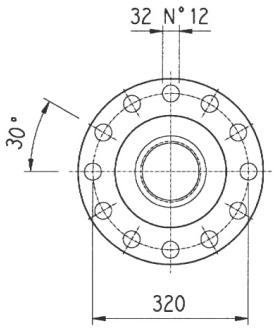

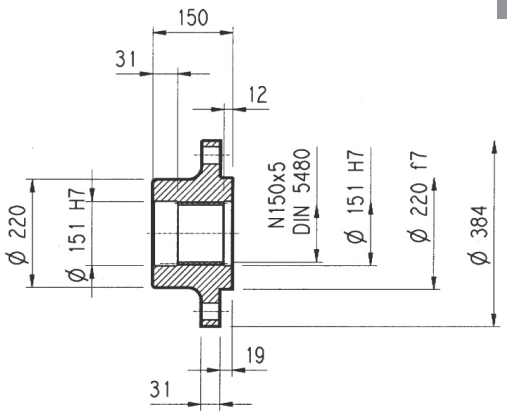

Materiale: Acciaio C40

Pignoni

P...

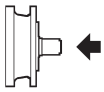

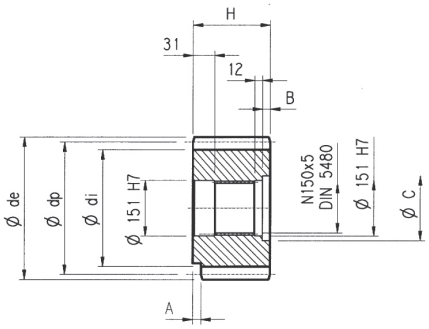

α = 20°

	m	z	x	dp	di	de	H	A	B	C	Materiale
PRG1	18	16	0.500	288	261	342	160	—	10	166	Acciaio 18NiCrMo5 Cementato e temprato
PRG2	18	16	0.617	288	271	339	150	30	—	—	Acciaio 39NiCrMo3 Bonificato

Manicotti lisci

M0A

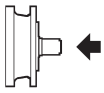

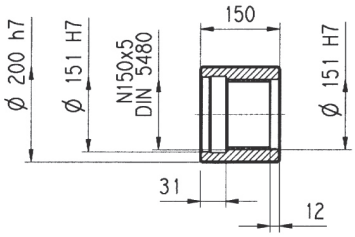

Materiale: Acciaio 16CrNi4

Barre scanalate

B0A

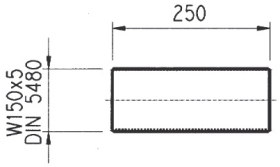

Materiale: Acciaio 18NiCrMo5 UNI 5331
da cementare e temprare 50-55 HRC

Giunto ad attrito

G0A

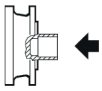

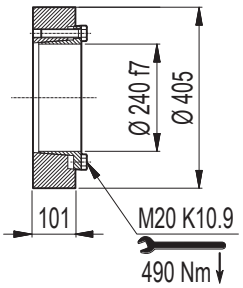

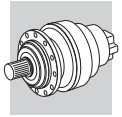

314M L 314M R

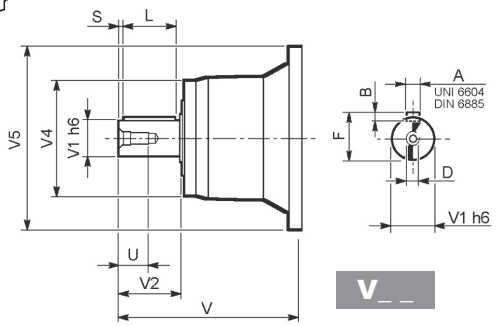

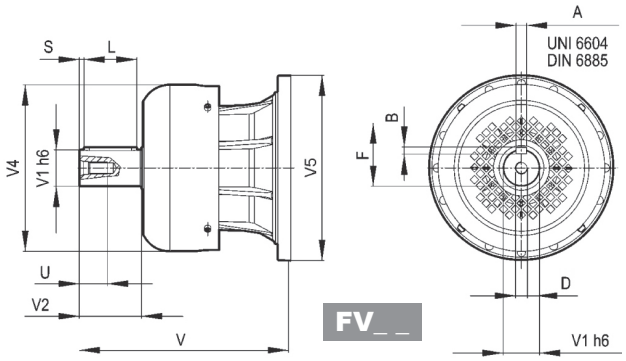

		V	V1	V2	V4	V5	A	B	F	L	S	D	U
314M L2	**V10B**	377	80	130	200	400	22	14	85	110	10	M16	36
	FV10B	457	80	130	347.5	400	22	14	85	110	10	M16	36
314M L3	**V06B**	307	60	105	155	292	18	11	64	90	7.5	M16	36
	FV06B	357	60	105	309	292	18	11	64	90	7.5	M16	36
314M L4	**V05B**	239	48	82	155	245	14	9	51.5	70	6	M16	36
	FV05B	276	48	82	219.5	244	14	9	51.5	70	6	M16	36
314M R3 (B) (C)	**V06B**	307	60	105	155	292	18	11	64	90	7.5	M16	36
	FV06B	357	60	105	309	292	18	11	64	90	7.5	M16	36
314M R4	**V01A**	137.5	24	36	120	186	8	7	27	30	3	M8	19
	V01B	158	38	58	120	186	10	8	41	50	4	M12	28

314M L 314M R

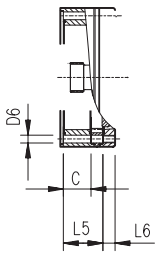

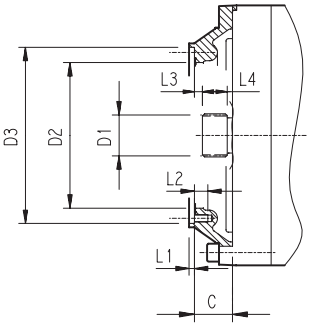

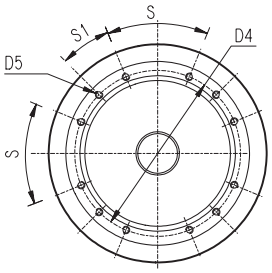

		C	D1	D2	D3	D4	D5	D6	L1	L2	L3	L4	L5	L6	S	S1	Input
314M L1	**V9AL**	120	100x94 DIN 5482	295	336 H7	370	M16 n°15	—	8	21	13	55	—	—	24°	24°	L
314M L2	**V9AC**	88	70x64 DIN 5482	200	282 H7	266	M12 n°12	—	4	22	11	32	—	—	45°	45°	C
314M L3	**V9AB**	45	58x53 DIN 5482	195	236 H7	222	M10 n°12	—	4	18	11	22	—	—	45°	22.5°	B
314M L4	**V9AA**	37	40x36 DIN 5482	140	178 H7	165	M10 n°8	—	4	18	9	18	—	—	45°	45°	A
314M R3 (B) (C)	**V9AB**	45	58x53 DIN 5482	195	236 H7	222	M10 n°12	—	4	18	11	22	—	—	45°	22.5°	B
314M R4	**V9AA**	37	40x36 DIN 5482	140	178 H7	165	M10 n°8	11	4	—	9	18	37	18	45°	45°	A

3/V 14M L

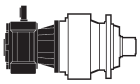

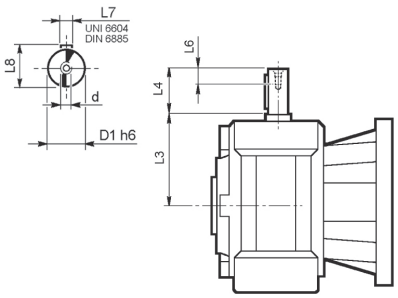

	D1 h6	L3	L4	L6	L7	L8	d
3/V 14M L3_HS	40	214.5	70	20	12	43	M8
3/V 14M L4_HS	35	185	65	20	10	38	M8

314M L 314M R 3/V 14M L

Carichi radiali ed assiali ammissibili sull'albero lento per un valore di $Fh_2 : n_2 \cdot h = 100000$

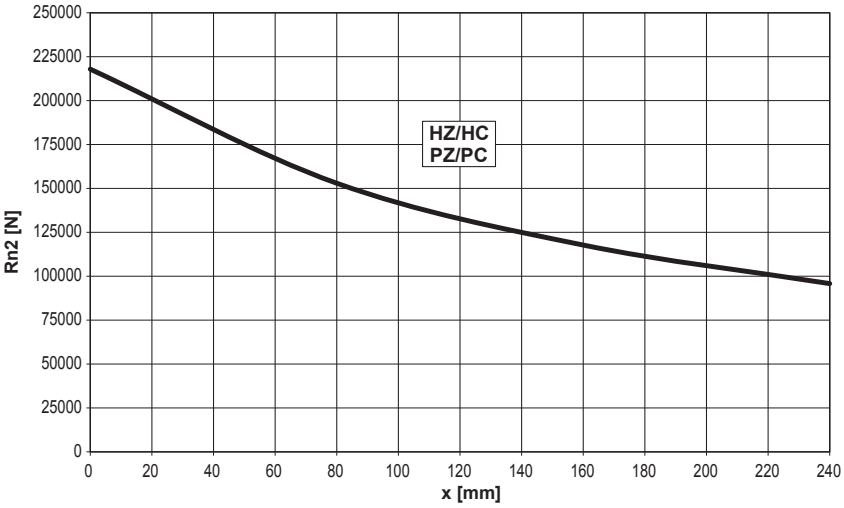

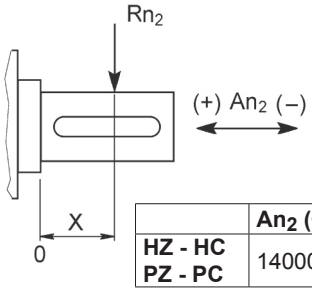

	An_2 (+)	An_2 (-)
HZ - HC PZ - PC	140000	105000

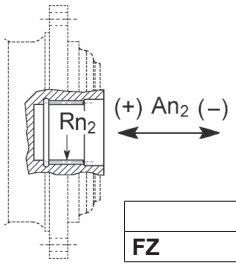

	Rn_2	An_2 (+/-)
FZ	41774	41774

Fattore fh_2 correttivo per carichi sugli alberi	$Fh_2 = n_2 \cdot h$		10000	25000	50000	100000	500000	1000000
	fh_2	FZ	**2.15**	**1.59**	**1.26**	**1.00**	**0.58**	**0.46**
		HZ - HC - PZ - PC	**2.00**	**1.52**	**1.23**	**1.00**	**0.62**	**0.50**

Carichi radiali ammissibili sull'albero veloce per un valore di $Fh_1 : n_1 \cdot h = 250000$

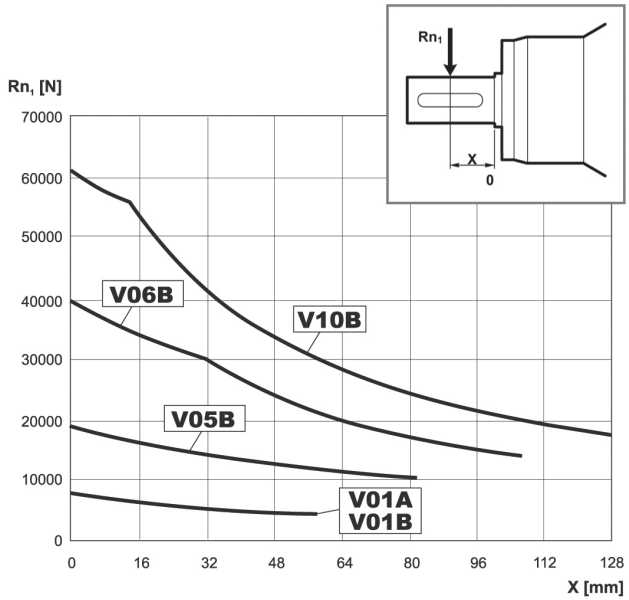

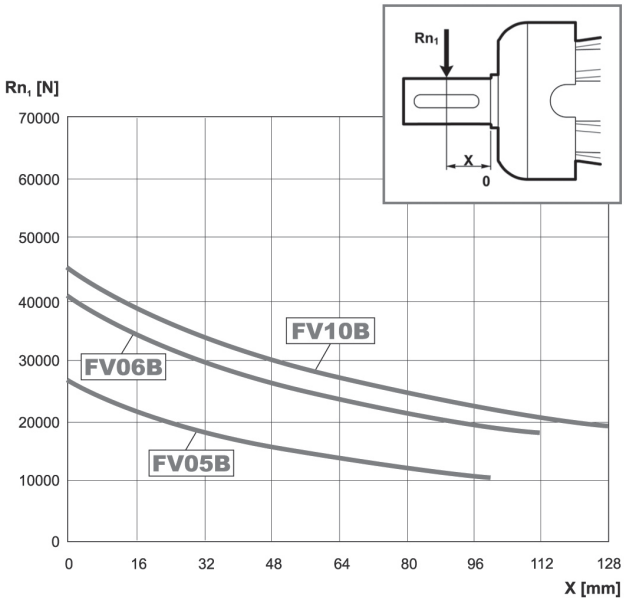

Fattore fh_1 correttivo per carichi sugli alberi	$Fh_1 = n_1 \cdot h$	250000	500000	1000000	2000000	5000000	10000000
	fh_1	**1**	**0.79**	**0.63**	**0.50**	**0.37**	**0.29**

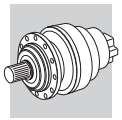

314M VK

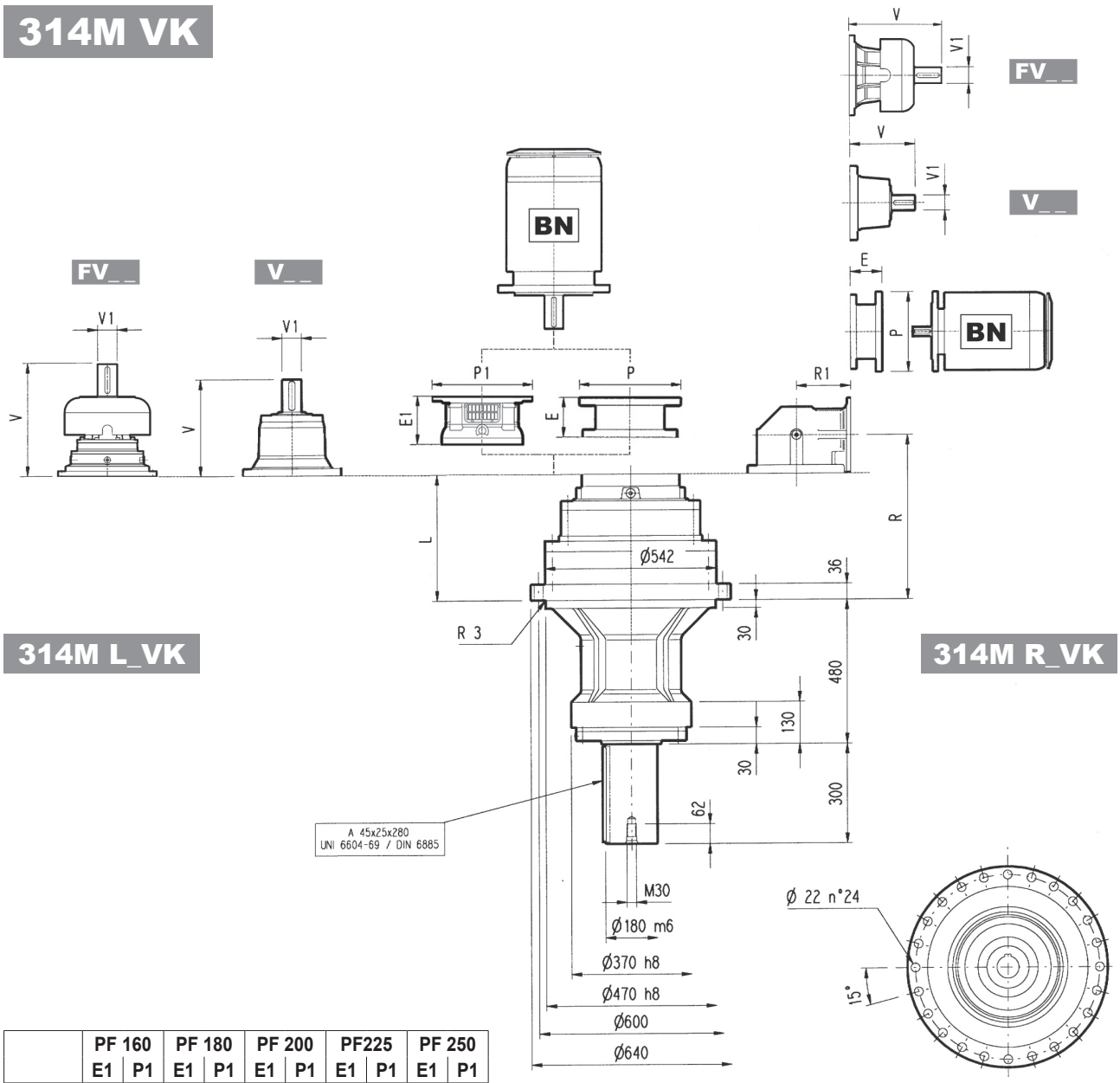

	PF 160		PF 180		PF 200		PF225		PF 250	
	E1	P1	E1	P1	E1	P1	E1	P1	E1	P1
314M L2	—	—	—	—	—	—	254	550	254	550
314M L3	—	—	167	390	197	400	197	450	207	550
314M L4	165	400	165	400	195	400	197	450	—	—

NOTA: Per esecuzione R contattare il Servizio Tecnico Bonfiglioli

	L	Kg	V	V1	Kg	V	V1	Kg	V	V1	Kg	V	V1	Kg	P132		P160		P180		P200		P225		P250	
															E	P	E	P	E	P	E	P	E	P	E	P
314M L2	386	650	348	80	55	—	—	—	457	80	63	—	—	—	—	—	—	—	—	—	271	400	301	450	281	550
314M L3	519	700	315	80	35	313	60	28	357	60	28	—	—	—	—	—	153	350	153	350	183	400	213	450	193	550
314M L4	608	710	239	48	15	—	—	—	276	48	17	—	—	—	114	300	144	350	144	350	174	400	—	—	—	—

	R	R1	Kg	V	V1	Kg	V	V1	Kg	V	V1	Kg	V	V1	Kg
314M R3 (B)	611	345	720	307	60	23	—	—	—	357	60	28	—	—	—
314M R3 (C)	611	390	730	307	60	23	—	—	—	357	60	28	—	—	—
314M R4	638	225	690	137.5	24	6	158	38	7	—	—	—	—	—	—

	P71		P80		P90		P100		P112		P132		P160		P180		P200		P225		P250	
	E	P	E	P	E	P	E	P	E	P	E	P	E	P	E	P	E	P	E	P	E	P
314M R3 (B)	—	—	—	—	—	—	—	—	—	—	—	—	—	—	152	350	182	400	212	450	193	550
314M R3 (C)	—	—	—	—	—	—	—	—	—	—	—	—	—	—	152	350	182	400	212	450	193	550
314M R4	65	160	84	200	84	200	94	250	94	250	114	300	144	350	—	—	—	—	—	—	—	—

314M VK

Il diagramma seguente consente di ricavare il carico radiale ammissibile R_{x2} quando questo è applicato alla distanza x dallo spallamento dell'albero lento del riduttore.
Le curve si riferiscono al valore risultante dal rapporto fra il carico assiale A_{n2} e il carico radiale R_{n2}, entrambi riferiti a n_2 = 10 min^{-1} e durata teorica di 10000 h.

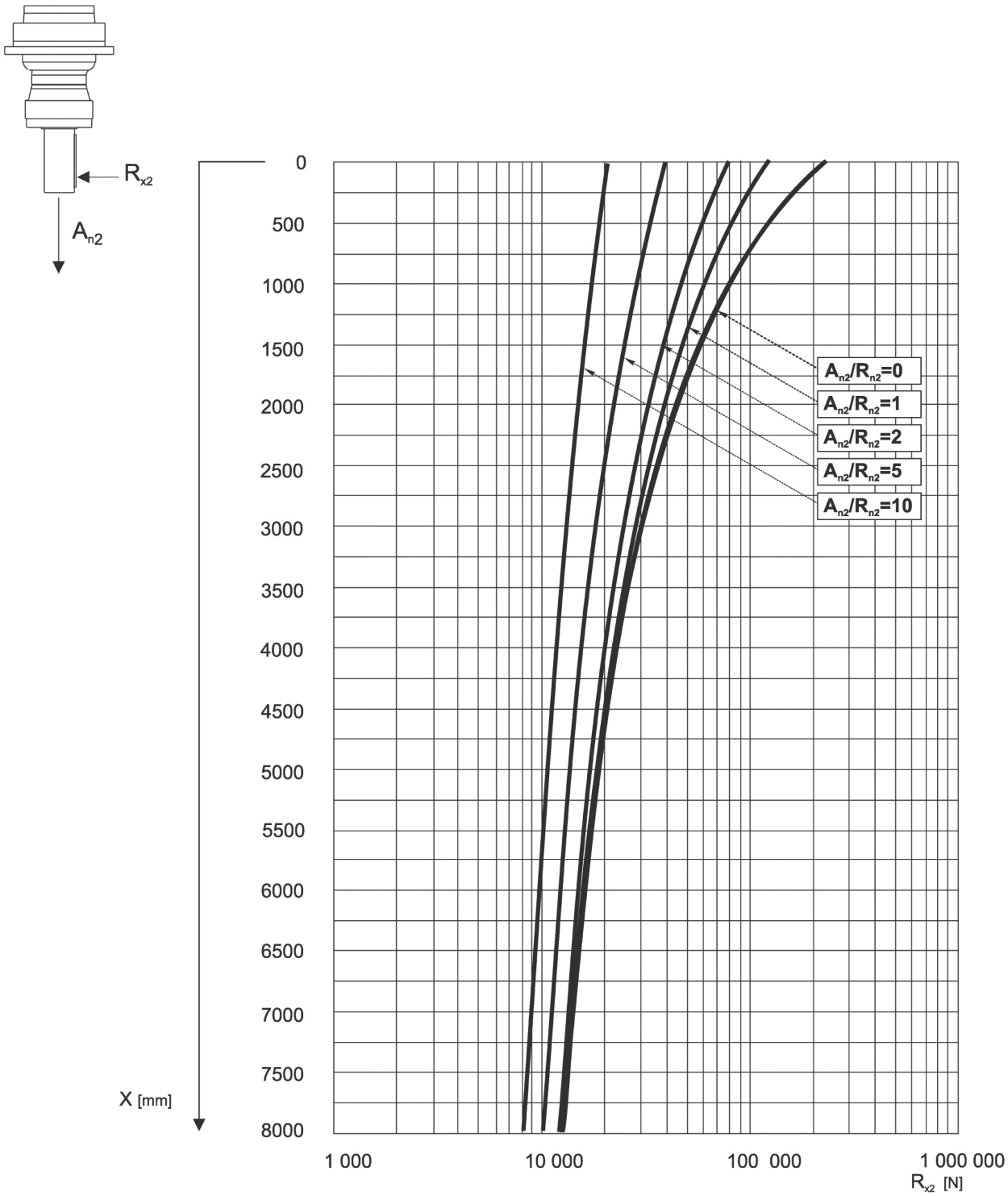

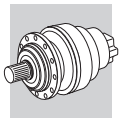

315M L

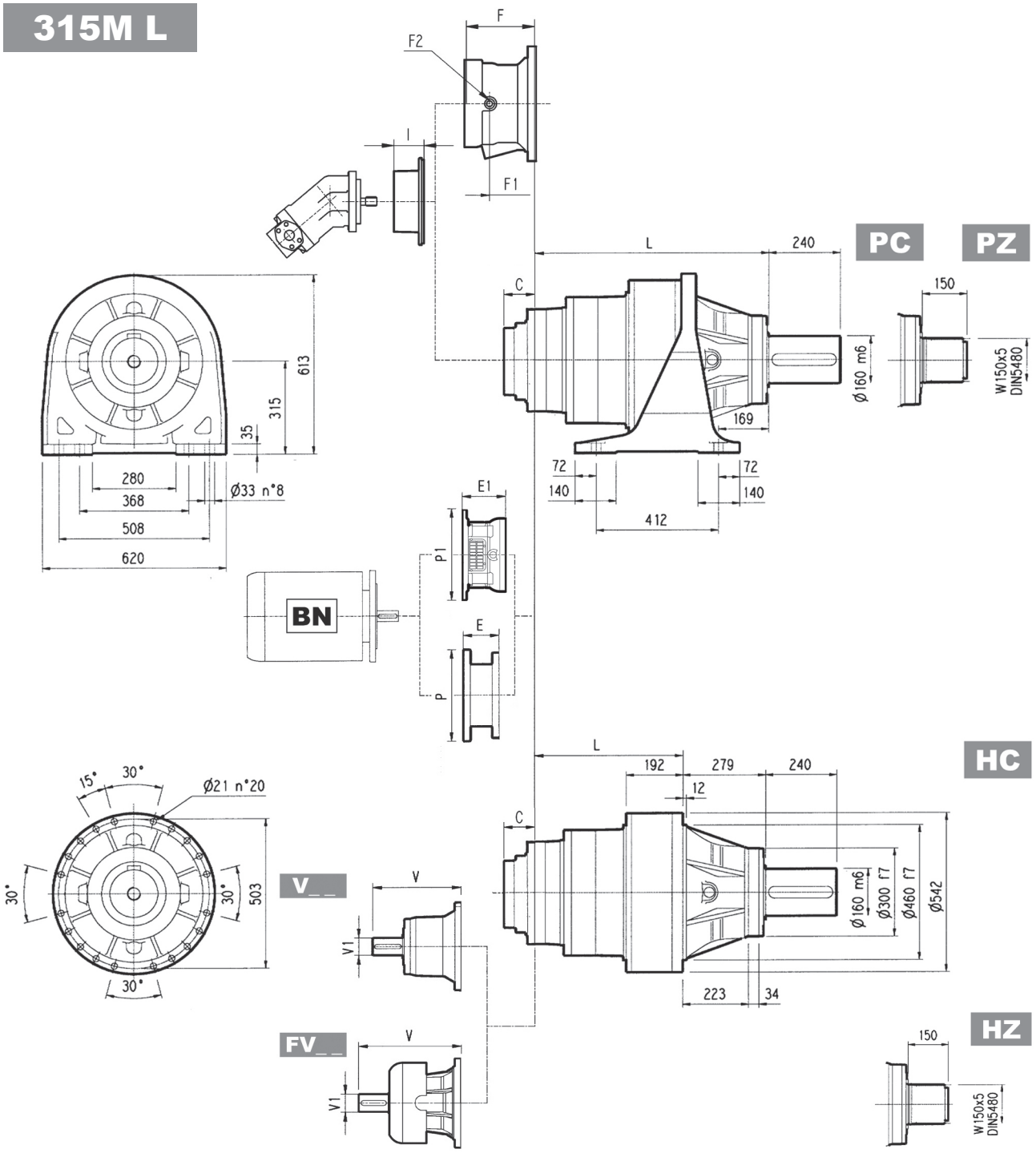

	L				Kg			
	PC - PZ	HC - HZ	FZ - FZP	FP	PC - PZ	HC - HZ	FZ - FZP	FP
315M L1	453	174	174	174	500	370	280	330
315M L2	665	386	386	386	585	455	365	415
315M L3	798	519	519	519	630	500	410	460
315M L4	887	608	608	608	642	512	422	472

	V	V1	Kg	V	V1	Kg	V	V1	Kg	V	V1	Kg	C	Input	I	F	F1	F2	Type	Input	Kg
315M L1	556	120	125	—	—	—	—	—	—	—	—	—	116	E		—	—	—	—	—	—
315M L2	348	80	55	—	—	—	456	80	85	—	—	—	81	D		232	185	1/4 G	6	B	35
315M L3	315	80	35	313	60	28	375	80	48	363	60	34	51	B	461	201	153	1/4 G	6	B	28
315M L4	239	48	15	—	—	—	276	48	17	—	—	—	37	A		145	95	1/4 G	5	A	16

315M L

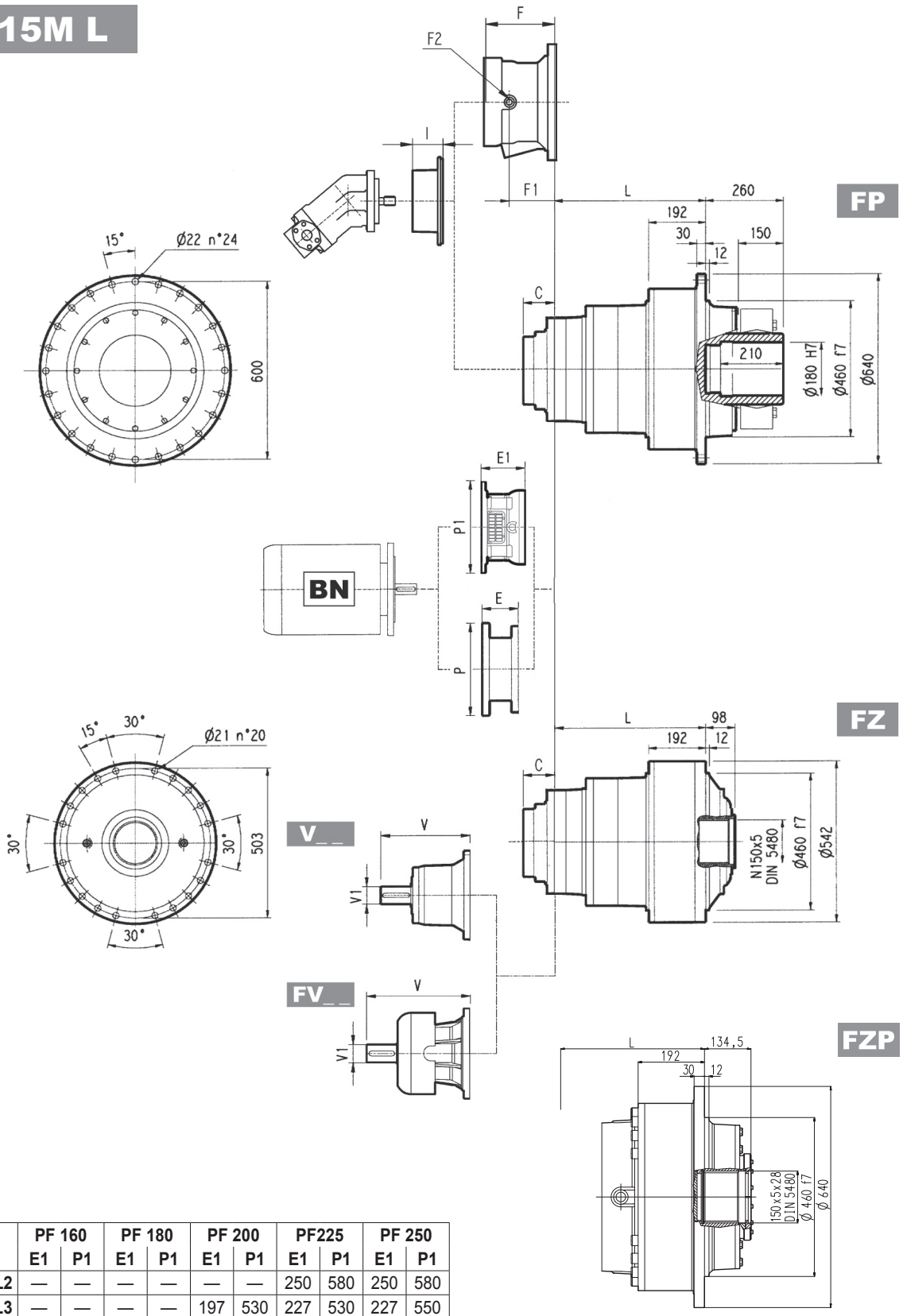

	PF 160		PF 180		PF 200		PF225		PF 250	
	E1	P1	E1	P1	E1	P1	E1	P1	E1	P1
315M L2	—	—	—	—	—	—	250	580	250	580
315M L3	—	—	—	—	197	530	227	530	227	550
315M L4	165	400	165	400	195	400	195	450	—	—

NOTA: Per esecuzione R contattare il Servizio Tecnico Bonfiglioli

FP	M_{2max} = 135000 Nm

	P132		P160		P180		P200		P225		P250	
	E	P	E	P	E	P	E	P	E	P	E	P
315M L2	—	—	—	—	—	—	267	400	297	450	297	550
315M L3	—	—	—	—	195	350	186	400	216	450	215	550
315M L4	114	300	144	350	144	350	174	400	—	—	—	—

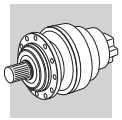

315M R

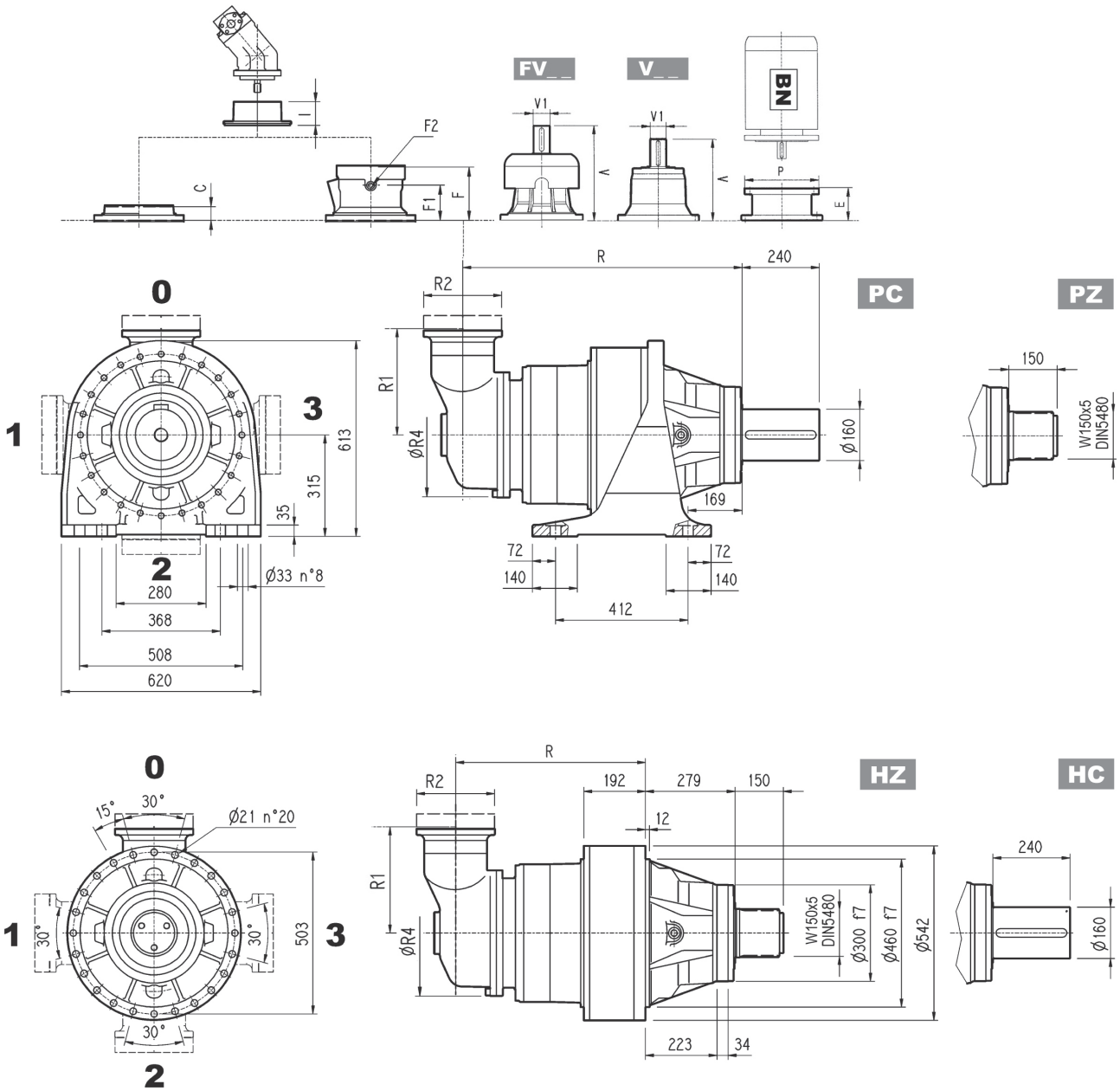

	R				R1	R2	R4	Kg			
	PC-PZ	HC-HZ	FZ - FZP	FP				PC-PZ	HC-HZ	FZ - FZP	FP
315M R3 (B)	890	611	611	611	345	292	400	720	590	500	550
315M R3 (C)	890	611	611	611	390	292	480	730	600	510	560
315M R4	917	638	638	638	225	245	345	680	550	460	510

	V	V1	Kg	V	V1	Kg	V	V1	Kg	V	V1	Kg	C	Input	I	F	F1	F2	Type	Input	Kg
315M R3 (B)	307	60	23	—	—	—	357	60	28	—	—	—	45	B		195	147	1/4 G	6	B	28
315M R3 (C)	307	60	23	—	—	—	357	60	28	—	—	—	45	B		195	147	1/4 G	6	B	28
315M R4	239	48	15	—	—	—	276	48	17	—	—	—	37	A	461	145	95	1/4 G	5	A	16

315M R

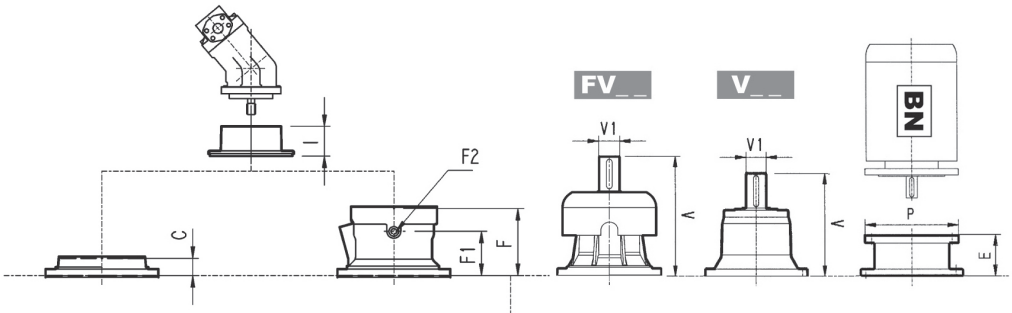

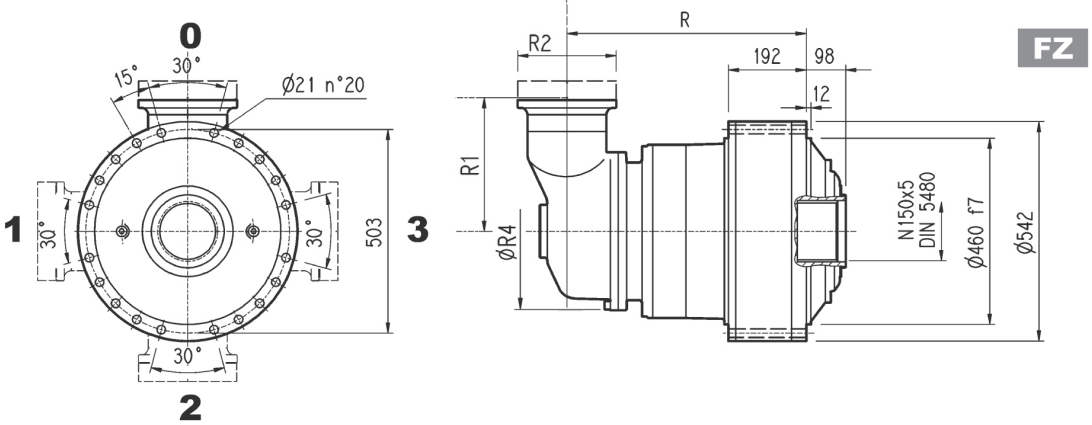

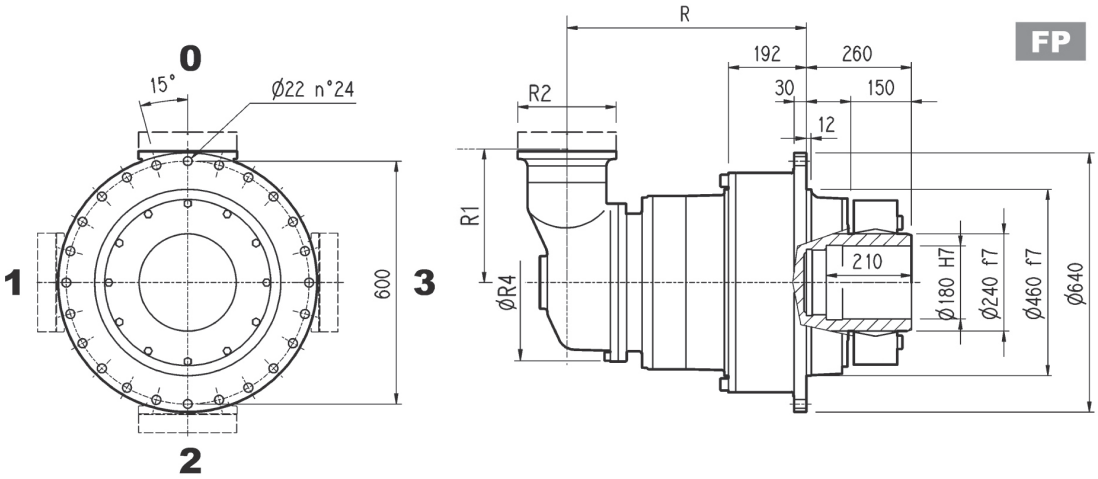

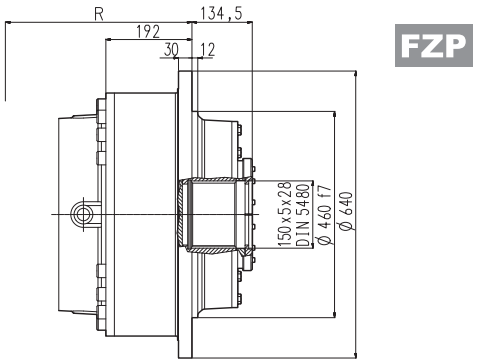

FP	M_{2max} = 135000 Nm

	P132		P160		P180		P200		P225		P250	
	E	P	E	P	E	P	E	P	E	P	E	P
315M R3 (B)	—	—	—	—	152	350	182	400	212	450	193	550
315M R3 (C)	—	—	—	—	152	350	182	400	212	450	193	550
315M R4	114	300	144	350	144	350	174	400	—	—	—	—

3/V 15M L3

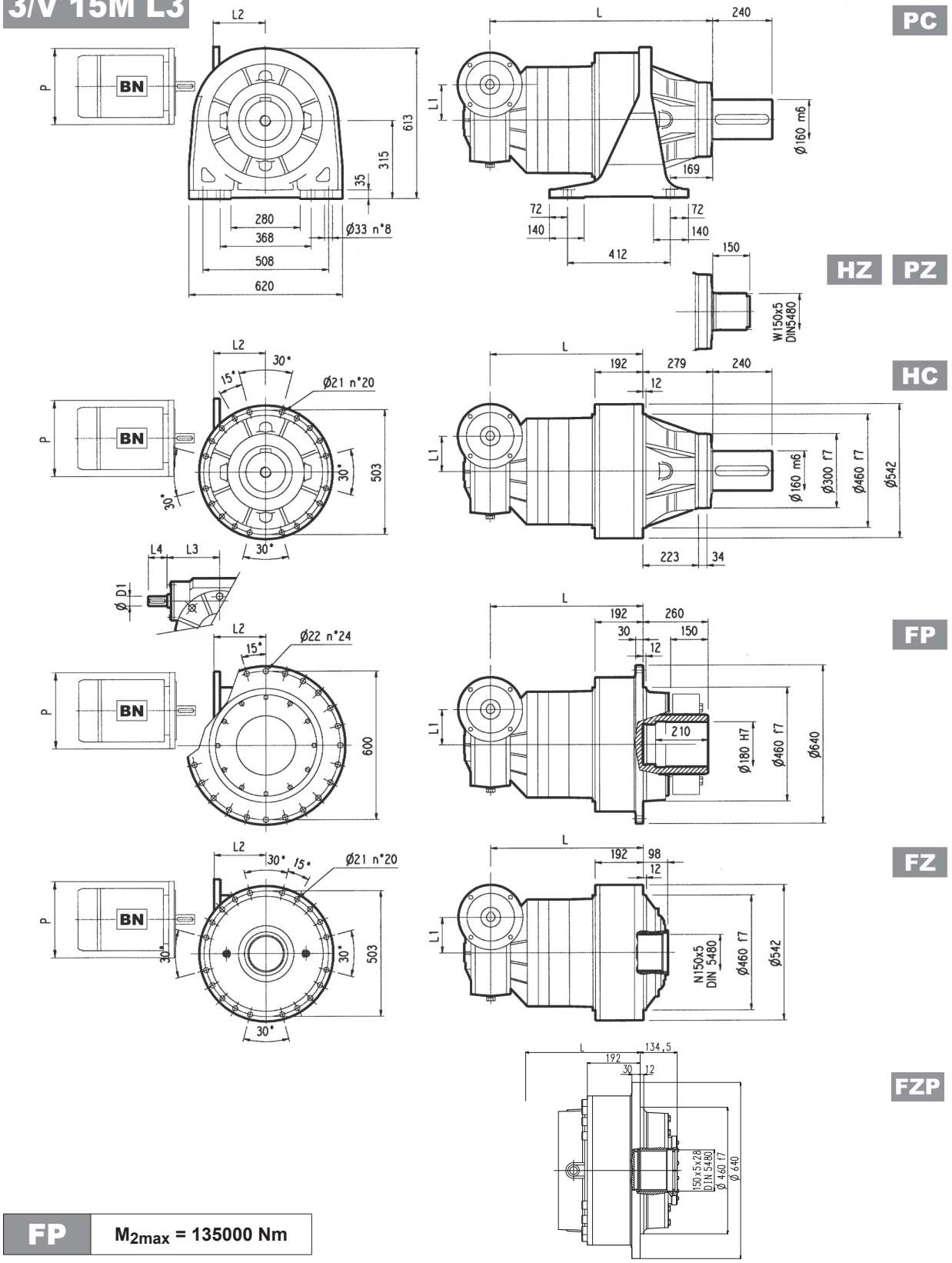

FP	M_{2max} = 135000 Nm

	L				L1	L2	D1	L3	L4	Kg			
	PC - PZ	HC - HZ	FZ - FZP	FP						PC - PZ	HC - HZ	FZ - FZP	FP
3/V 15M L3	885	606	606	606	210	—	48	230	110	800	670	575	625

	P100	P112	P132		P160		P180		P200		P225	
	P	P	L2	P	L2	P	L2	P	L2	P	L2	P
3/V 15M L3	—	—	485	300	460	350	460	350	485	400	490	450

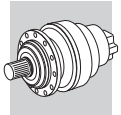

3/V 15M L4

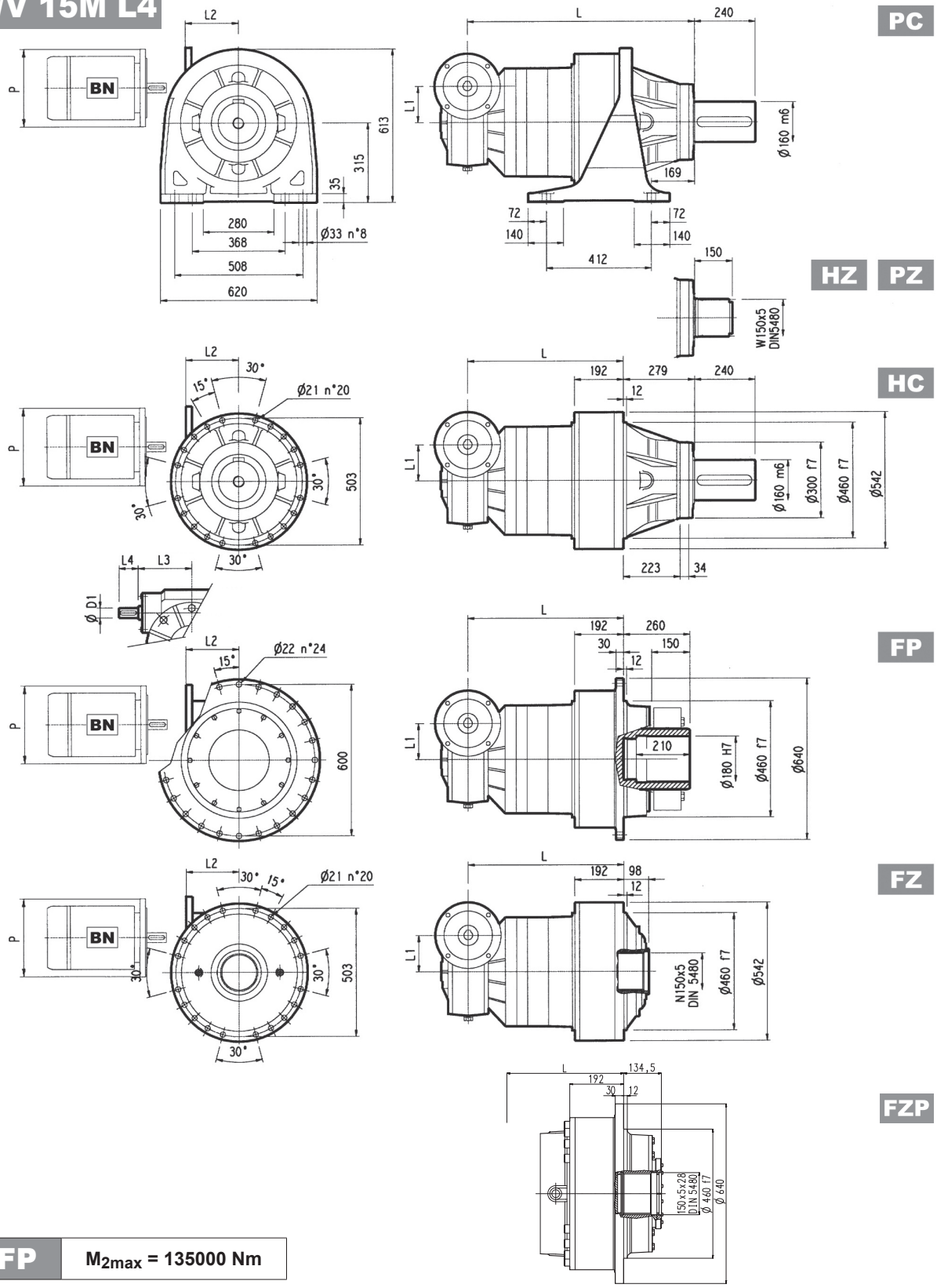

FP	M_{2max} = 135000 Nm

	L				L1	L2	D1	L3	L4	Kg			
	PC - PZ	HC - HZ	FZ - FZP	FP						PC - PZ	HC - HZ	FZ - FZP	FP
3/V 15M L4	989	710	710	710	150	190	35	185	65	690	560	470	520

	P100	P112	P132		P160		P180		P200		P225	
	P	P	L2	P	L2	P	L2	P	L2	P	L2	P
3/V 15M L4	250	250	—	300	—	350	—	—	—	—	—	—

315M L 315M R 3/V 15M L

HC

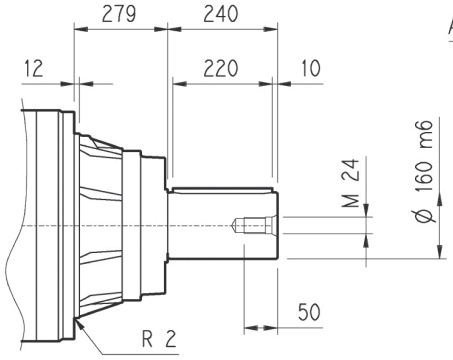

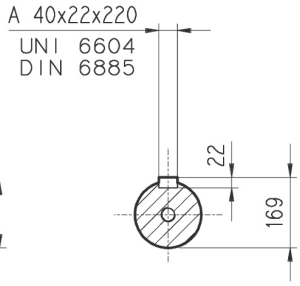

PC

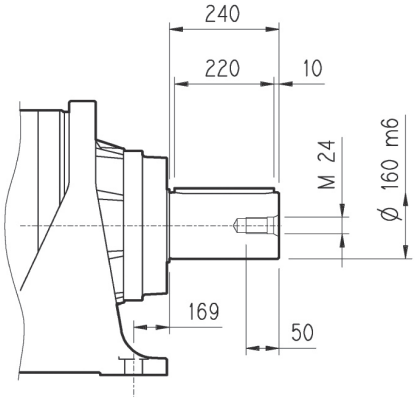

HZ

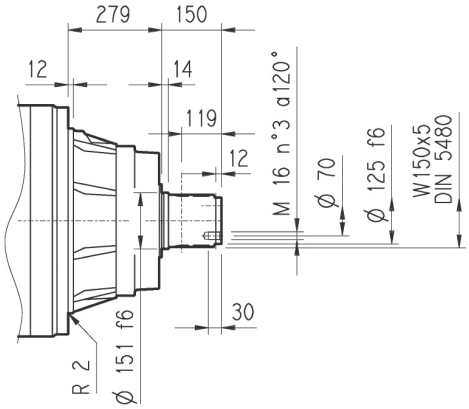

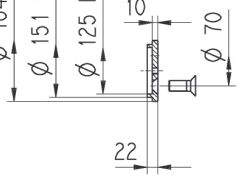

FZ

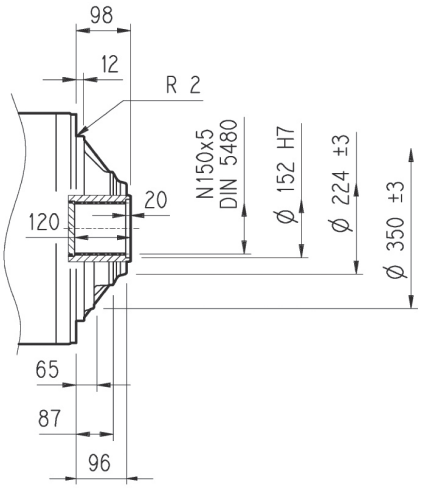

FP

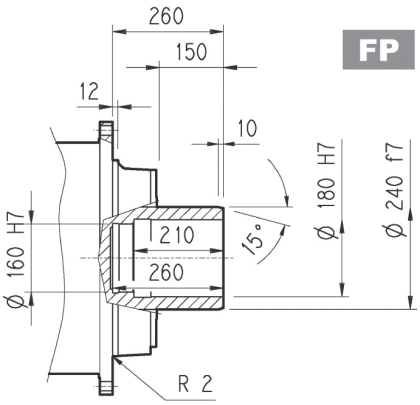

FZP

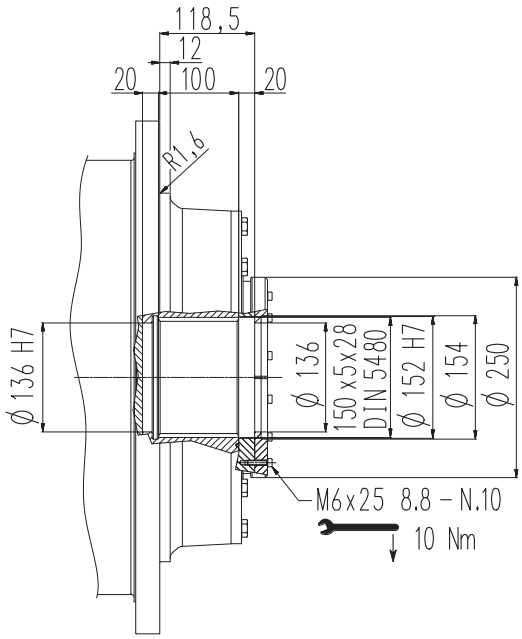

FP	M_{2max} = 135000 Nm

Flangia

W0A

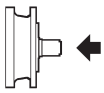

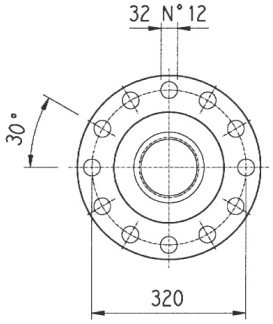

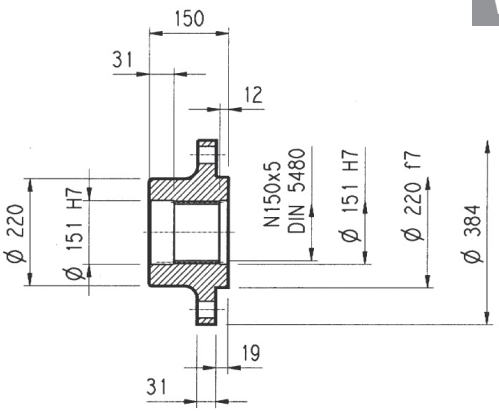

Materiale: Acciaio C40

Pignoni

P...

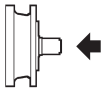

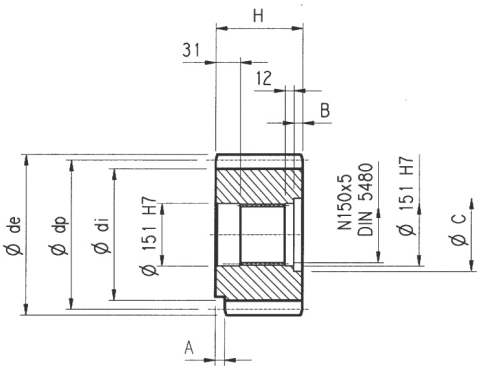

α = 20°

	m	z	x	dp	di	de	H	A	B	C	Materiale
PRG1	18	16	0.500	288	261	342	160	—	10	166	Acciaio 18NiCrMo5 Cementato e temprato
PRG2	18	16	0.617	288	271	339	150	30	—	—	Acciaio 39NiCrMo3 Bonificato

Manicotti lisci

M0A

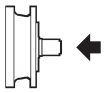

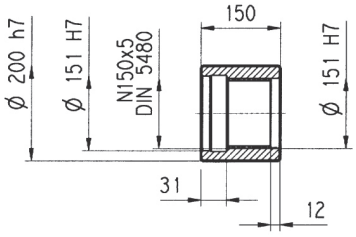

Materiale: Acciaio 16CrNi4

Barre scanalate

B0A

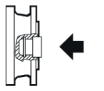

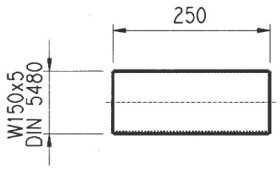

Materiale: Acciaio 18NiCrMo5 UNI 5331
da cementare e temprare 50-55 HRC

Giunto ad attrito

G0A

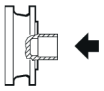

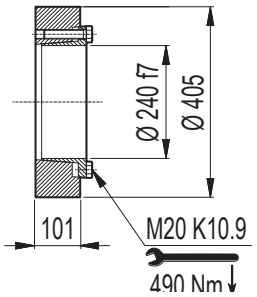

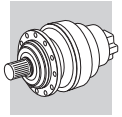

315M L 315M R

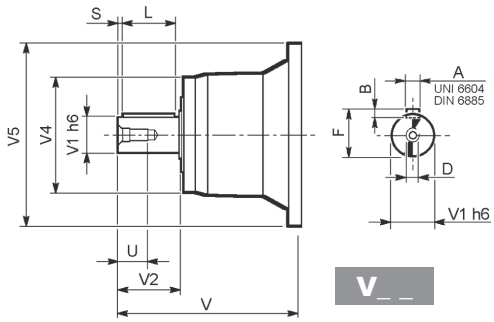

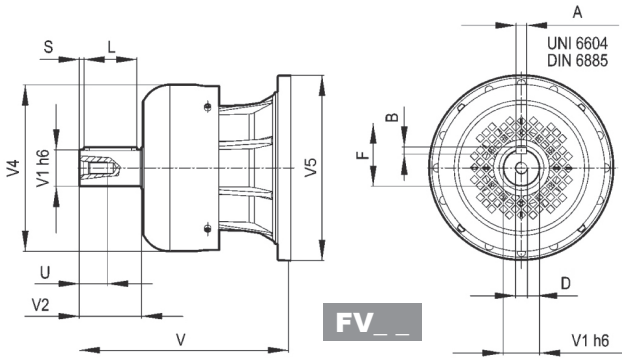

		V	V1	V2	V4	V5	A	B	F	L	S	D	U
315M L1	**V15B**	556	120	210	230	542	32	18	127	180	15	M24	50
315M L2	**V11B**	348	80	130	200	428	22	14	85	110	10	M16	36
	FV11B	456	80	130	347.5	428	22	14	85	110	10	M16	36
315M L3	**V07B**	315	80	130	200	345	22	14	85	110	10	M16	36
	FV07B	375	80	130	347.5	348	22	14	85	110	10	M16	36
	V07A	313	60	105	155	345	18	11	64	90	7.5	M16	36
	FV07A	363	60	105	309	348	18	11	64	90	7.5	M16	36
315M L4	**V05B**	239	48	82	155	245	14	9	51.5	70	6	M16	36
	FV05B	276	48	82	219.5	244	14	9	51.5	70	6	M16	36
315M R3 (B) (C)	**V06B**	307	60	105	155	292	18	11	64	90	7.5	M16	36
	FV06B	357	60	105	309	292	18	11	64	90	7.5	M16	36
315M R4	**V05B**	239	48	82	155	245	14	9	51.5	70	6	M16	36
	FV05B	276	48	82	219.5	244	14	9	51.5	70	6	M16	36

315M L 315M R

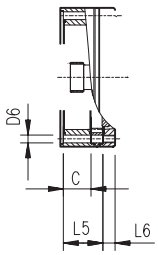

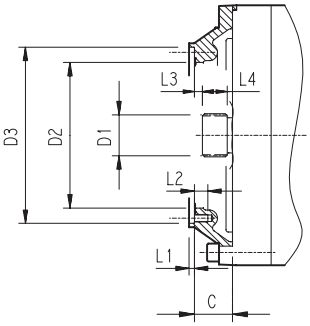

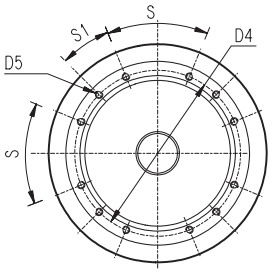

		C	D1	D2	D3	D4	D5	D6	L1	L2	L3	L4	L5	L6	S	S1	Input
315M L1	**V9AE**	116	100x94 DIN 5482	340	412 H7	390	M16 n°18	—	7	30	8	55	—	—	20°	20°	E
315M L2	**V9AD**	81	80x74 DIN 5482	270	335 H7	314	M16 n°8	—	5	30	8.5	40	—	—	60°	30°	D
315M L3	**V9AB**	51	58x53 DIN 5482	195	236 H7	222	M10 n°12	—	4	18	11	22	—	—	45°	22.5°	B
315M L4	**V9AA**	37	40x36 DIN 5482	140	178 H7	165	M10 n°8	—	4	18	9	18	—	—	45°	45°	A
315M R4	**V9AA**	37	40x36 DIN 5482	140	178 H7	165	M10 n°8	11	4	18	9	18	—	—	45°	45°	A
315M R3 (B) (C)	**V9AB**	45	58x53 DIN 5482	195	236 H7	222	M10 n°12	—	4	18	11	22	—	—	45°	22.5°	B

3/V 15M L

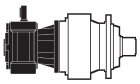

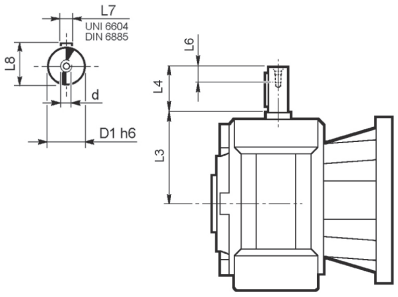

	D1 h6	L3	L4	L6	L7	L8	d
3/V 15M L3_HS	48	230	110	40	14	51.5	M16
3/V 15M L4_HS	35	185	65	20	10	38	M8

315M L 315M R 3/V 15M L

Carichi radiali ed assiali ammissibili sull'albero lento per un valore di $Fh_2 : n_2 \cdot h = 100000$

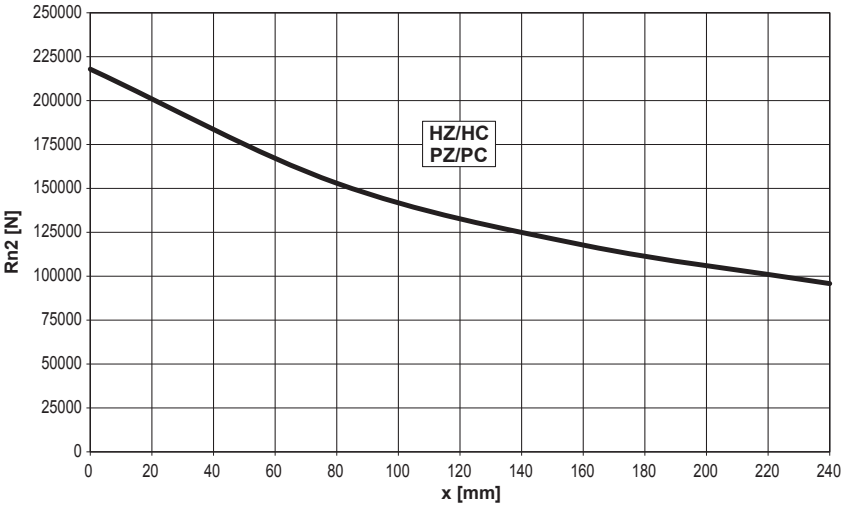

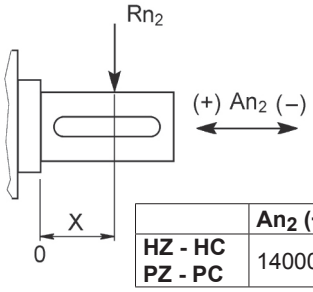

	An_2 (+)	An_2 (-)
HZ - HC PZ - PC	140000	105000

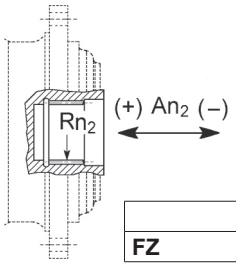

	Rn_2	An_2 (+/-)
FZ	41774	41774

Fattore fh_2 correttivo per carichi sugli alberi	$Fh_2 = n_2 \cdot h$		10000	25000	50000	100000	500000	1000000
	fh_2	FZ	**2.15**	**1.59**	**1.26**	**1.00**	**0.58**	**0.46**
		HZ - HC - PZ - PC	**2.00**	**1.52**	**1.23**	**1.00**	**0.62**	**0.50**

Carichi radiali ammissibili sull'albero veloce per un valore di $Fh_1 : n_1 \cdot h = 250000$

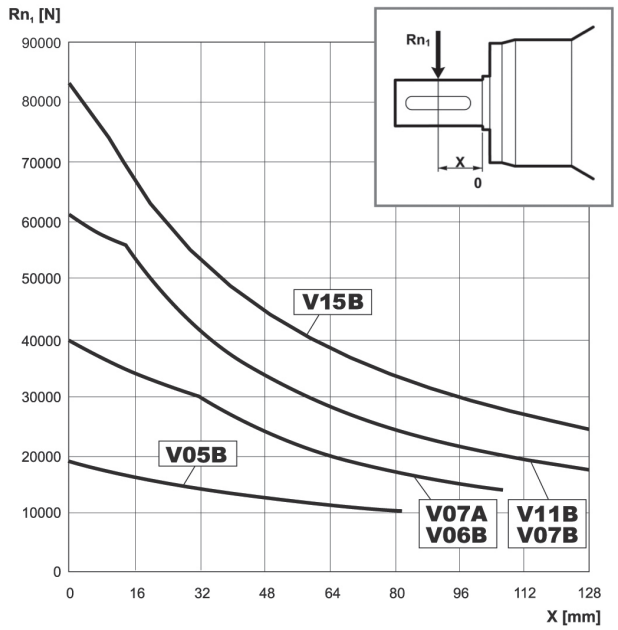

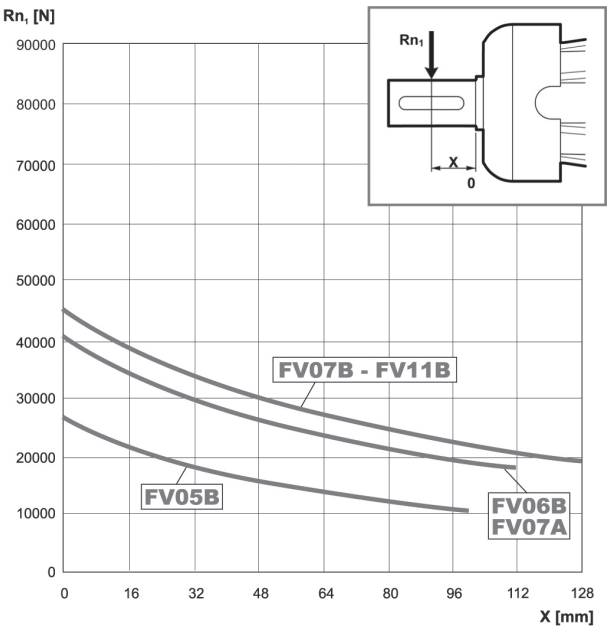

Fattore fh_1 correttivo per carichi sugli alberi	$Fh_1 = n_1 \cdot h$	250000	500000	1000000	2000000	5000000	10000000
	fh_1	**1**	**0.79**	**0.63**	**0.50**	**0.37**	**0.29**

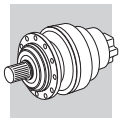

315M VK

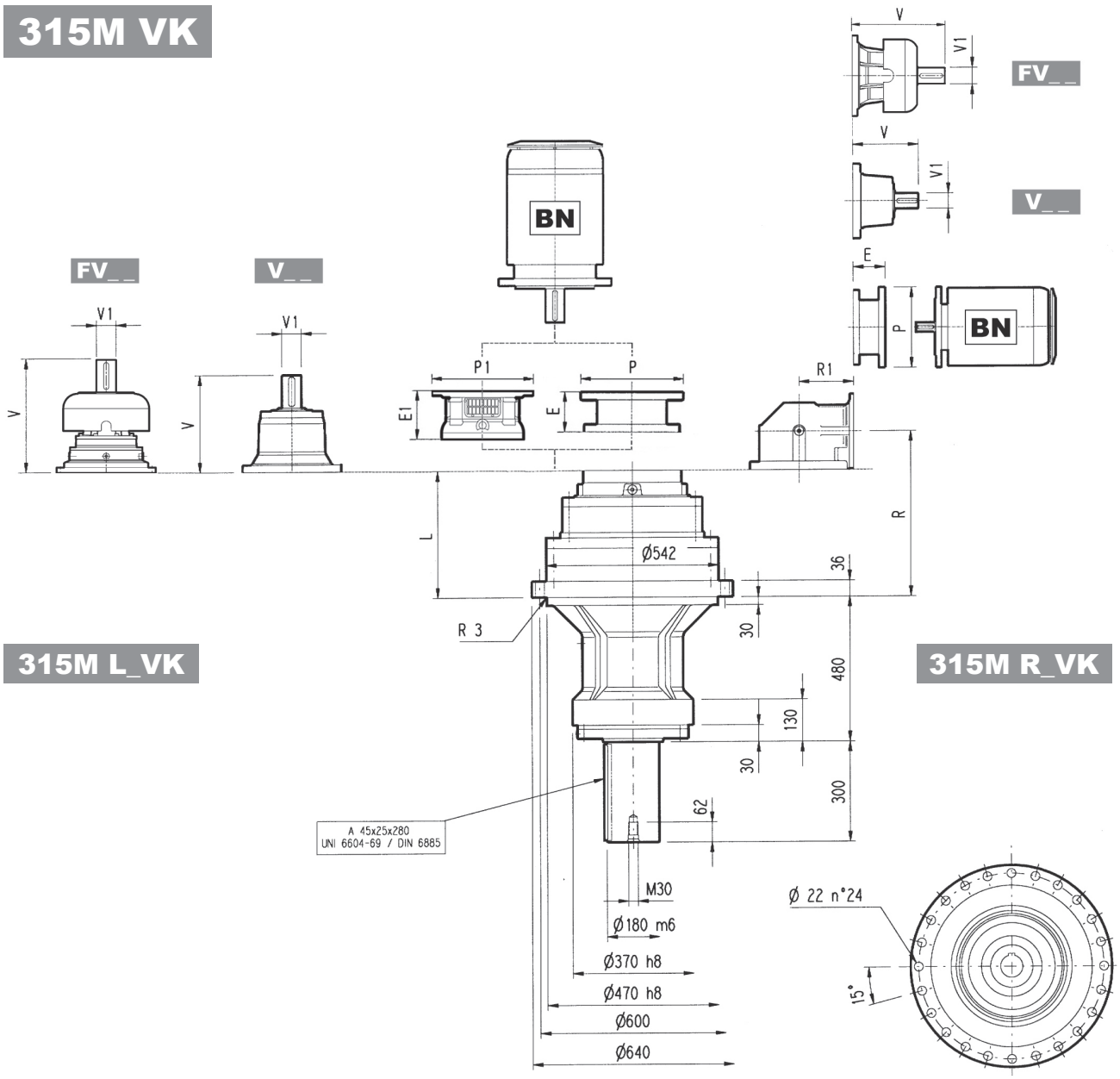

315M L_VK

315M R_VK

	PF 160		PF 180		PF 200		PF225		PF 250	
	E1	P1	E1	P1	E1	P1	E1	P1	E1	P1
315M L2	—	—	—	—	—	—	250	580	250	580
315M L3	—	—	—	—	197	530	227	530	227	550
315M L4	165	400	165	400	195	400	195	450	—	—

NOTA: Per esecuzione R contattare il Servizio Tecnico Bonfiglioli

	L	Kg	V	V1	Kg	V	V1	Kg	V	V1	Kg	V	V1	Kg	P132		P160		P180		P200		P225		P250	
															E	P	E	P	E	P	E	P	E	P	E	P
315M L2	386	650	348	80	55	—	—	—	456	80	85	—	—	—	—	—	—	—	—	—	—	—	—	—	—	—
315M L3	519	700	315	80	35	313	60	28	375	80	48	363	60	34	—	—	—	—	195	350	186	400	216	450	215	550
315M L4	608	710	239	48	15	—	—	—	276	48	17	—	—	—	114	300	144	350	144	350	174	400	—	—	—	—

	R	R1	Kg	V	V1	Kg	V	V1	Kg	V	V1	Kg	V	V1	Kg	P132		P160		P180		P200		P225		P250	
																E	P	E	P	E	P	E	P	E	P	E	P
315M R3 (B)	611	345	720	307	60	23	—	—	—	357	60	28	—	—	—	—	—	—	—	152	350	182	400	212	450	193	550
315M R3 (C)	611	390	730	307	60	23	—	—	—	357	60	28	—	—	—		—	—	—	152	350	182	400	212	450	193	550
315M R4	638	225	690	239	48	15	—	—	—	276	48	17	—	—	—	114	300	144	350	144	350	174	400	—	—	—	—

315M VK

Il diagramma seguente consente di ricavare il carico radiale ammissibile R_{x2} quando questo è applicato alla distanza x dallo spallamento dell'albero lento del riduttore.
Le curve si riferiscono al valore risultante dal rapporto fra il carico assiale A_{n2} e il carico radiale R_{n2}, entrambi riferiti a n_2 = 10 min^{-1} e durata teorica di 10000 h.

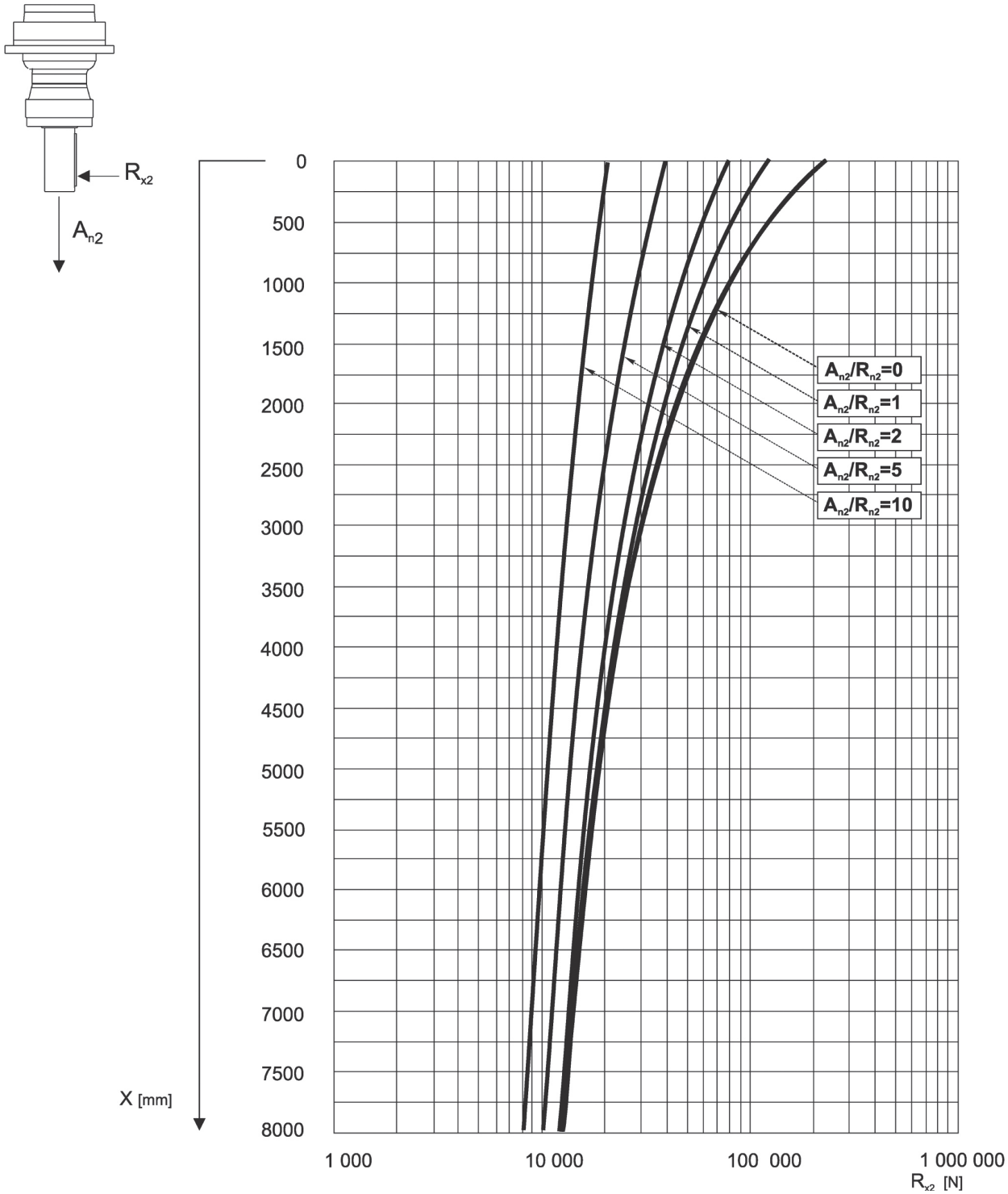

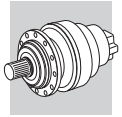

316M L

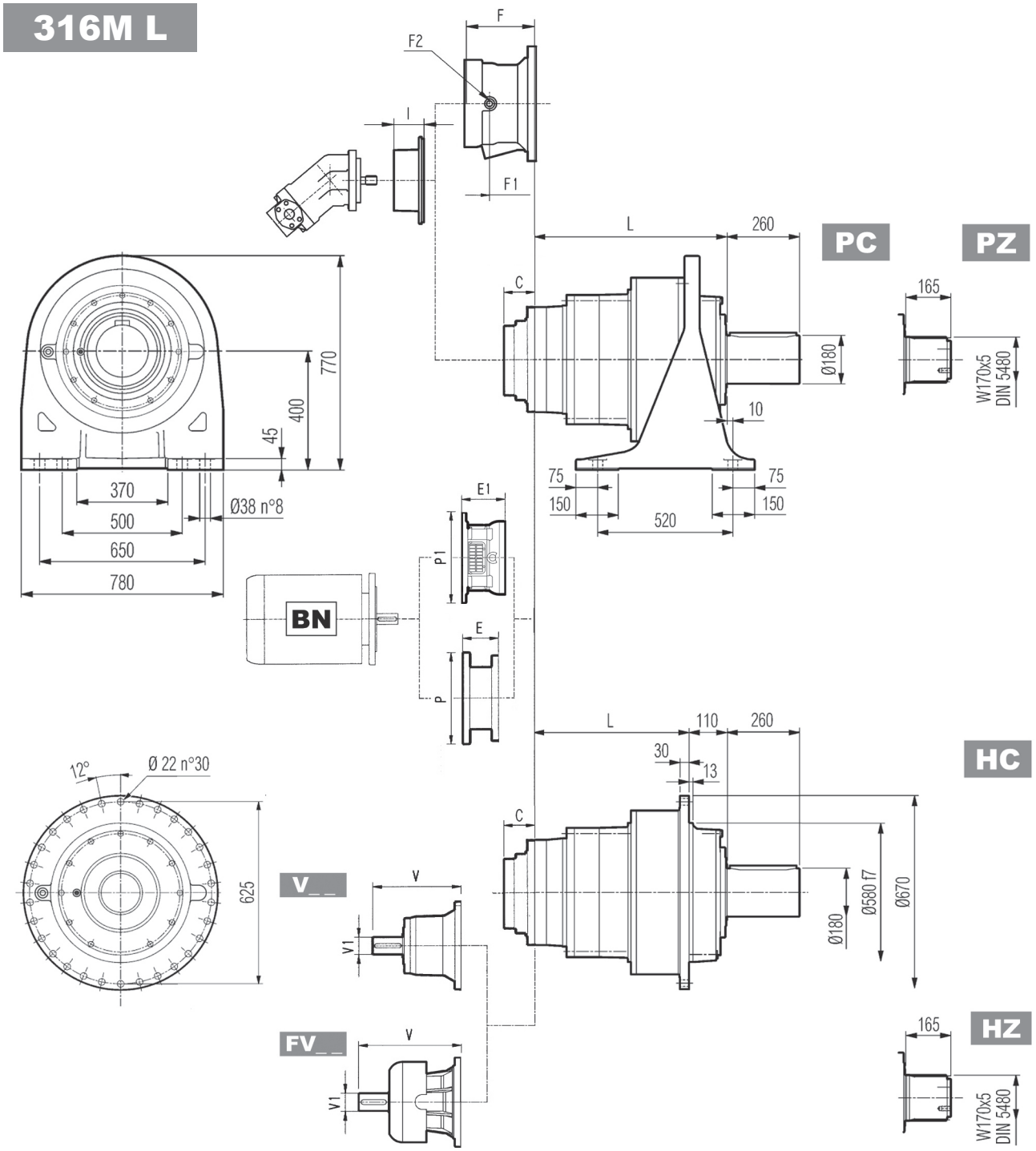

	L				Kg			
	PC - PZ	HC - HZ	FZ - FZP	FP	PC - PZ	HC - HZ	FZ - FZP	FP
316M L1	289	179	179	179	700	500	430	450
316M L2	541	431	431	431	790	590	520	540
316M L3	674	564	564	564	840	640	570	590
316M L4	763	653	653	653	860	660	590	610

	V	V1	Kg	V	V1	Kg	V	V1	Kg	V	V1	Kg	C	Input	I	F	F1	F2	Type	Input	Kg
316M L1	—	—	—	—	—	—	—	—	—	—	—	—	156	E		—	—	—	—	—	—
316M L2	348	80	55	—	—	—	456	80	85	—	—	—	81	D		—	—	—	—	—	—
316M L3	315	80	35	313	60	28	375	80	48	363	60	34	51	B	461	201	153	1/4 G	6	B	28
316M L4	239	48	15	—	—	—	276	48	17	—	—	—	37	A		145	95	1/4 G	5	A	16

316M L

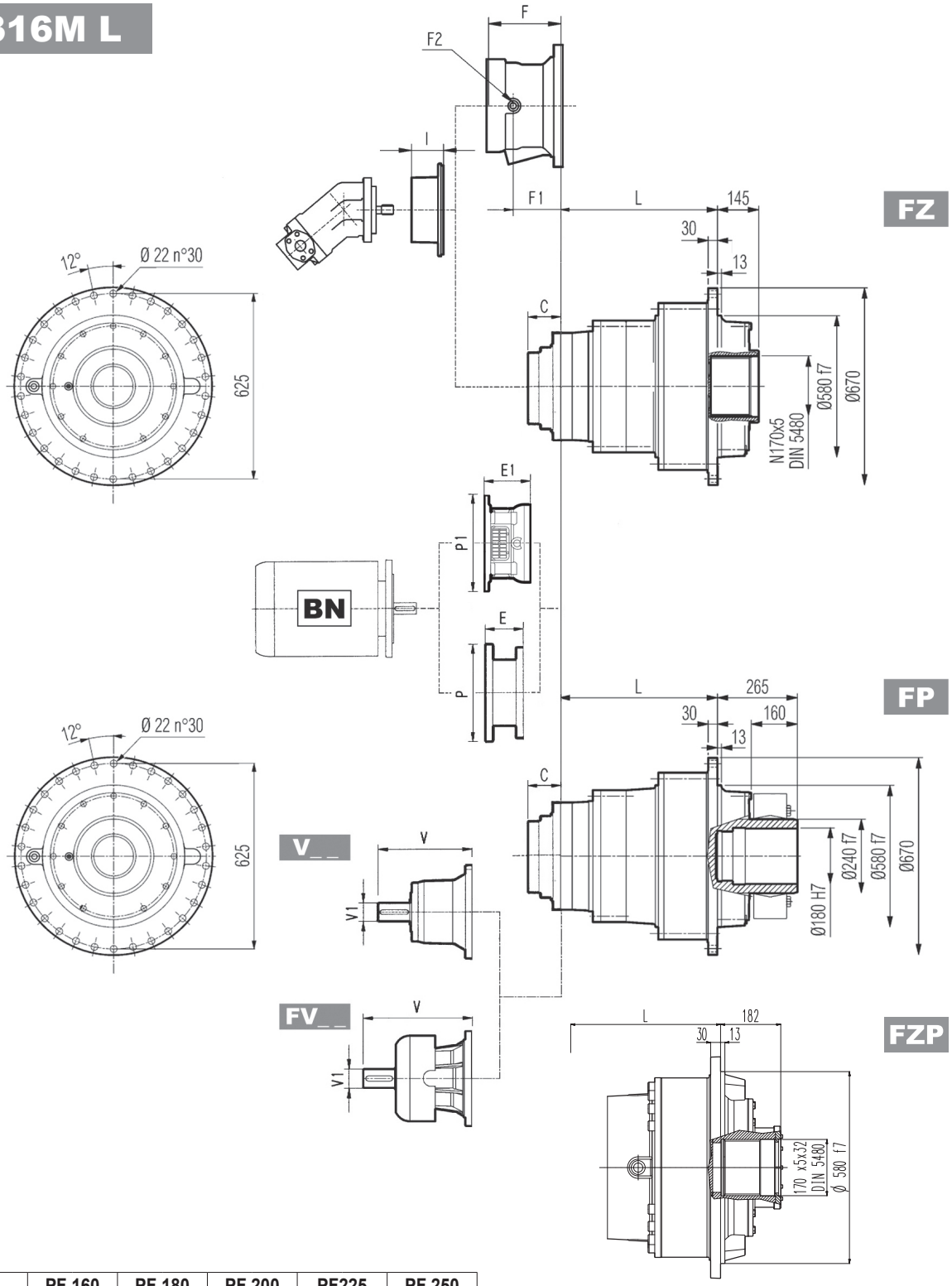

	PF 160		PF 180		PF 200		PF225		PF 250	
	E1	P1	E1	P1	E1	P1	E1	P1	E1	P1
316M L2	—	—	—	—	—	—	250	580	250	580
316M L3	—	—	—	—	197	530	227	530	227	550
316M L4	165	400	165	400	195	400	195	450	—	—

NOTA: Per esecuzione R contattare il Servizio Tecnico Bonfiglioli

FP	M_{2max} = 178000 Nm

	P132		P160		P180		P200		P225		P250	
	E	P	E	P	E	P	E	P	E	P	E	P
316M L2	—	—	—	—	—	—	267	400	297	450	297	550
316M L3	—	—	—	—	195	350	186	400	216	450	215	550
316M L4	114	300	144	350	144	350	174	400	—	—	—	—

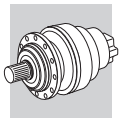

316M R

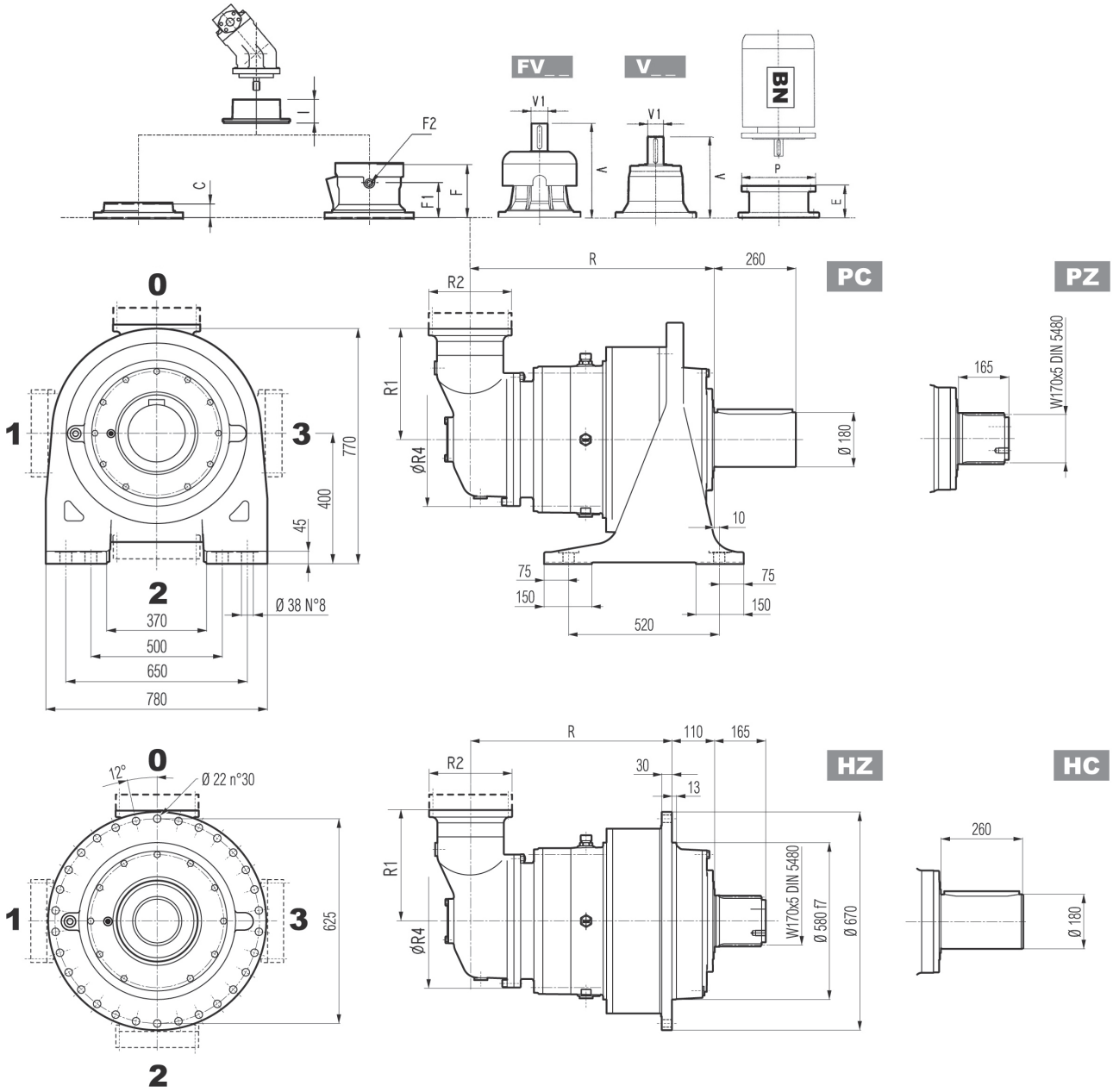

	R				R1	R2	R4	Kg			
	PC-PZ	HC-HZ	FZ - FZP	FP				PC-PZ	HC-HZ	FZ - FZP	FP
316M R3 (B)	766	656	656	656	345	292	400	910	710	640	660
316M R3 (C)	766	656	656	656	390	292	480	920	720	650	670
316M R4	793	683	683	683	225	245	345	890	690	620	640

	V	V1	Kg	V	V1	Kg	V	V1	Kg	V	V1	Kg	C	Input	I	F	F1	F2	Type	Input	Kg
316M R3 (B)	307	60	23	—	—	—	357	60	28	—	—	—	45	B		195	147	1/4 G	6	B	28
316M R3 (C)	307	60	23	—	—	—	357	60	28	—	—	—	45	B		195	147	1/4 G	6	B	28
316M R4	239	48	15	—	—	—	276	48	17	—	—	—	37	A	461	145	95	1/4 G	5	A	16

316M R

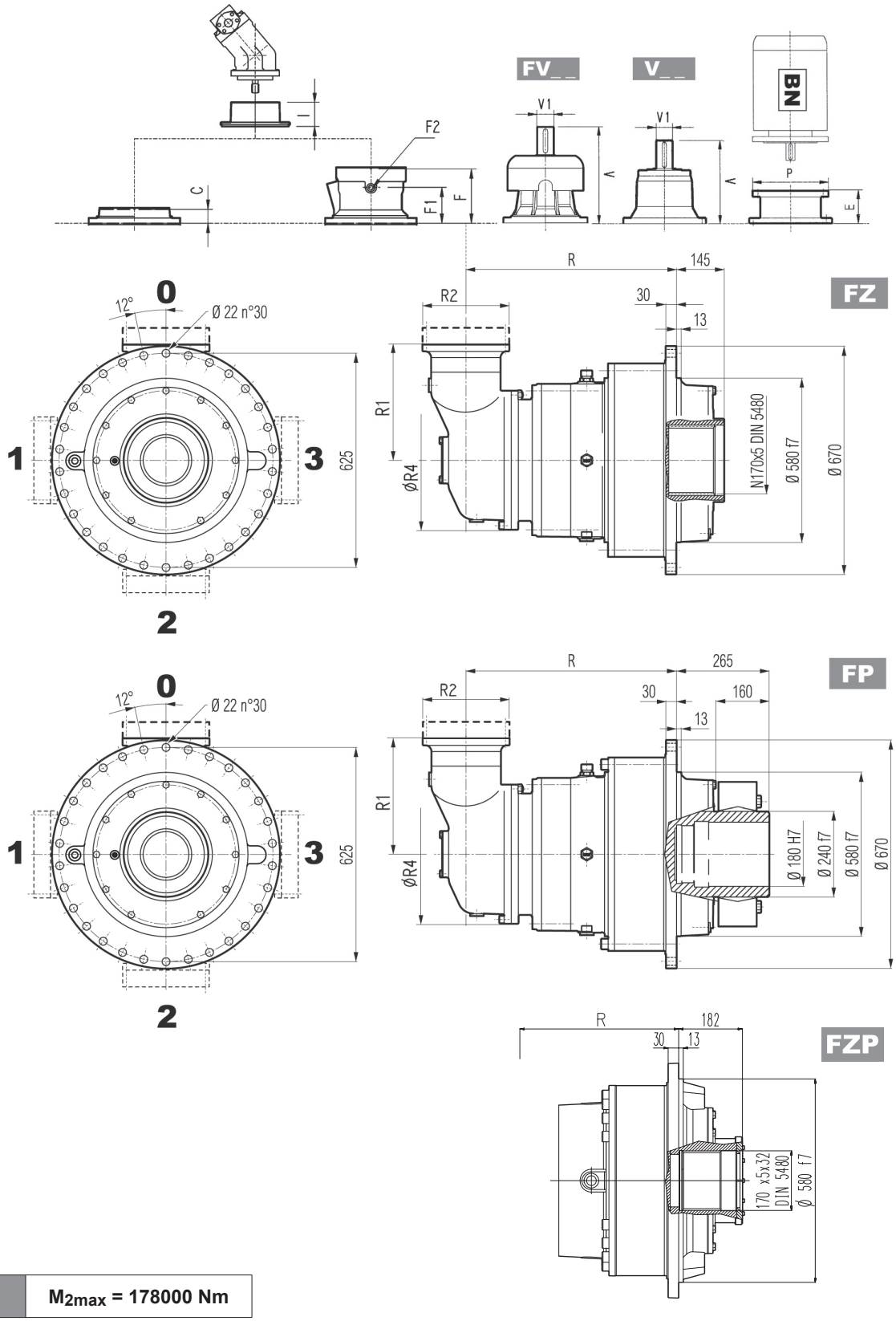

FP	M_{2max} = 178000 Nm

	P132		P160		P180		P200		P225		P250	
	E	P	E	P	E	P	E	P	E	P	E	P
316M R3 (B)	—	—	—	—	152	350	182	400	212	450	193	550
316M R3 (C)	—	—	—	—	152	350	182	400	212	450	193	550
316M R4	114	300	144	350	144	350	174	400	—	—	—	—

3/V 16M L3

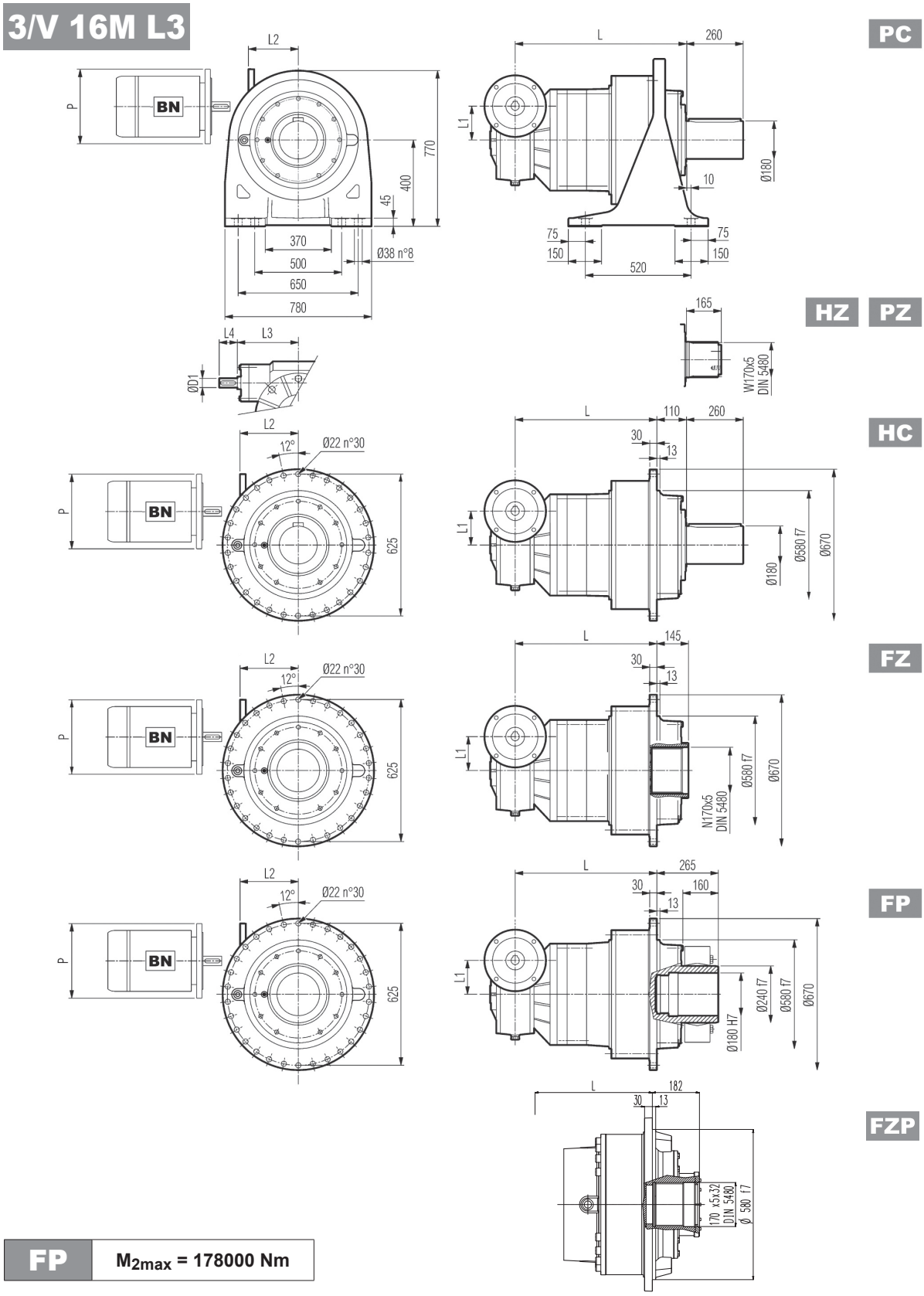

FP	M_{2max} = 178000 Nm

	L				L1	D1	L3	L4	Kg			
	PC - PZ	HC - HZ	FZ - FZP	FP					PC - PZ	HC - HZ	FZ - FZP	FP
3/V 16M L3	812	702	702	702	250	55	274	110	1100	900	830	850

	P132		P160		P180		P200		P225	
	L2	P	L2	P	L2	P	L2	P	L2	P
3/V 16M L3	531	300	506	350	506	350	531	400	536	450

3/V 16M L4

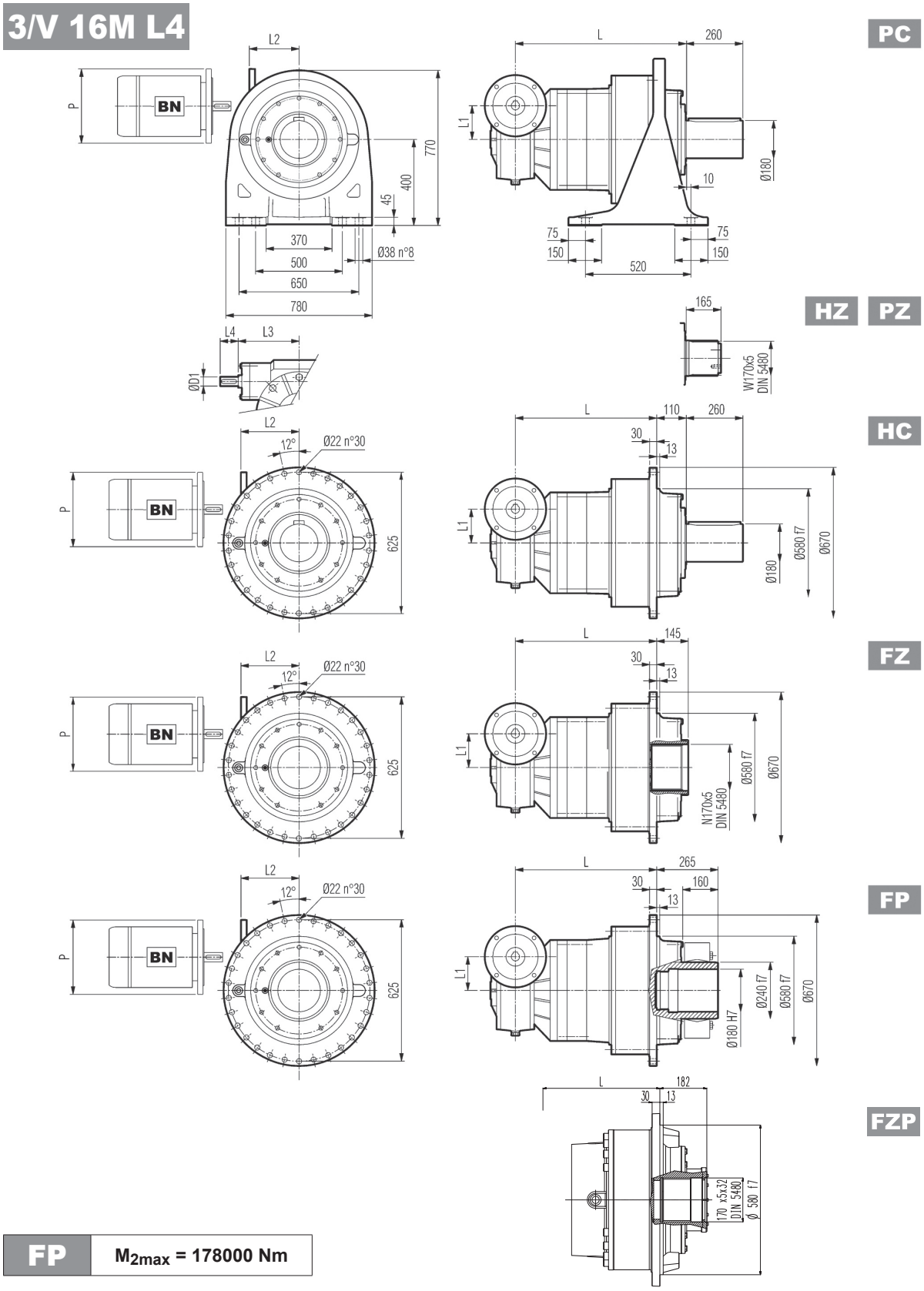

FP	M_{2max} = 178000 Nm

	L				L1	D1	L3	L4	Kg			
	PC - PZ	HC - HZ	FZ	FP					PC - PZ	HC - HZ	FZ	FP
3/V 16M L4	865	755	755	755	150	35	185	65	900	700	630	650

	P100		P112		P132		P160	
	L2	P	L2	P	L2	P	L2	P
3/V 16M L4	190	250	190	250	190	300	190	350

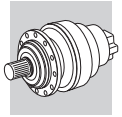

316M L 316M R 3/V 16M L

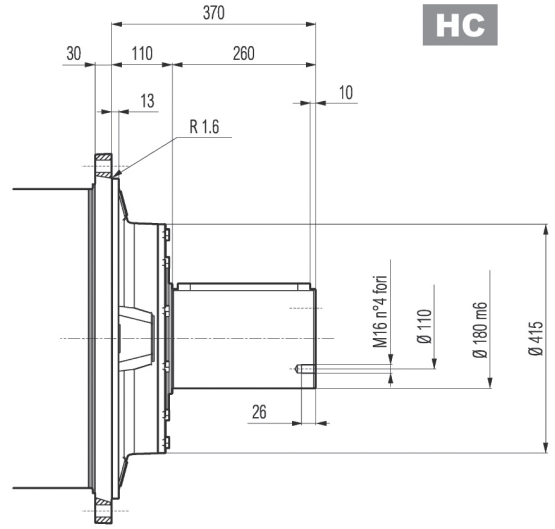

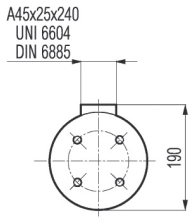

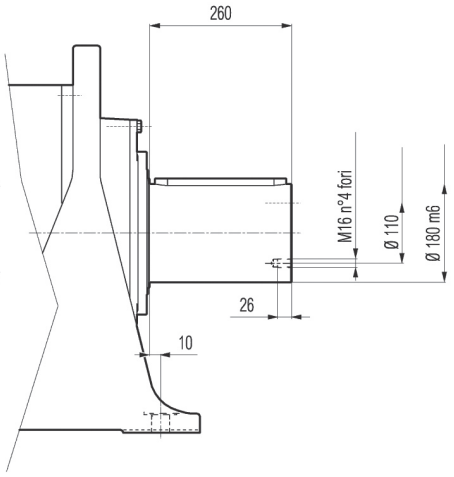

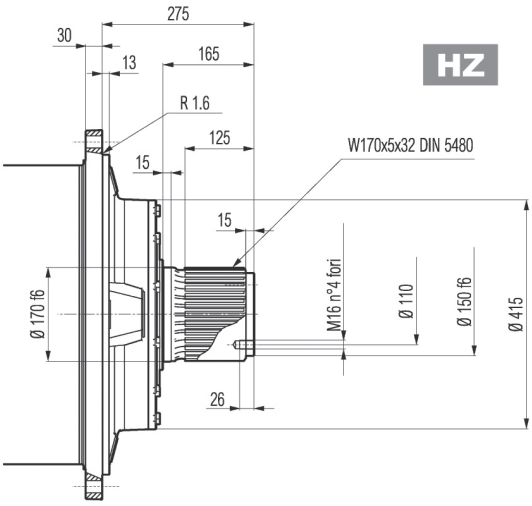

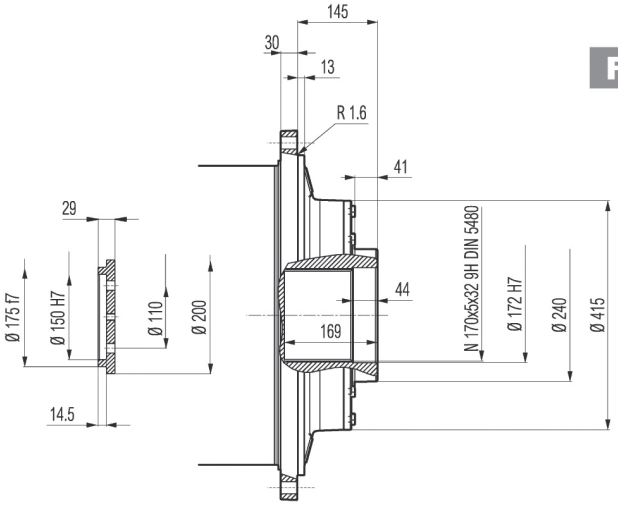

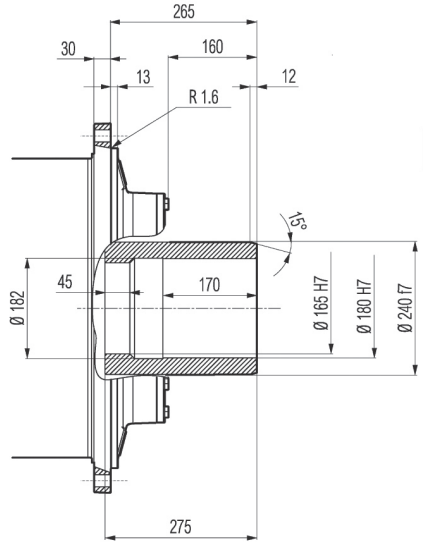

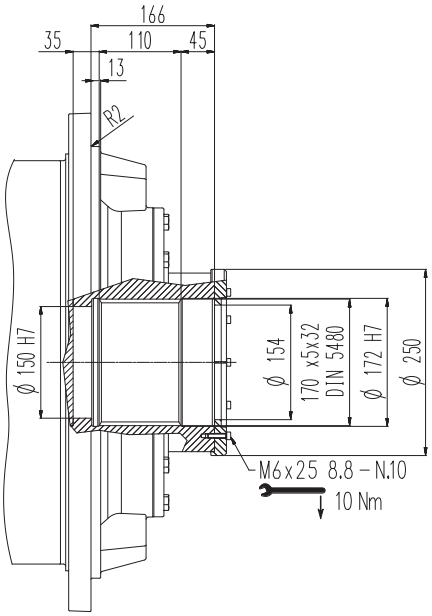

FP	M_{2max} = 178000 Nm

Flangia

W0A

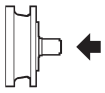

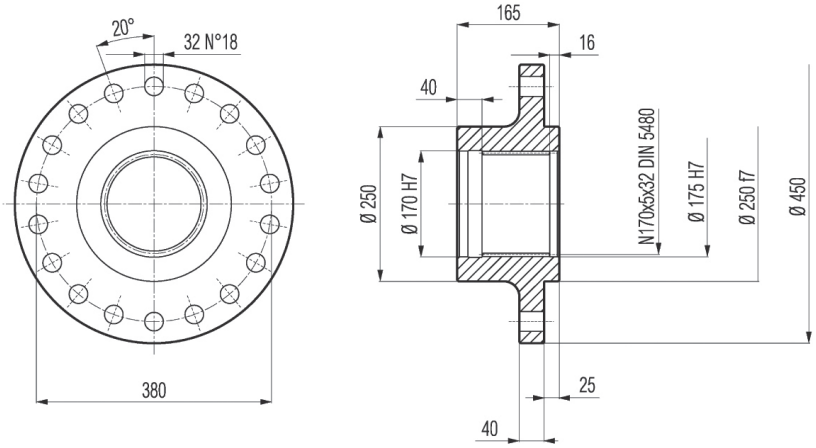

Materiale: Acciaio C40

Manicotti lisci

M0A

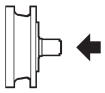

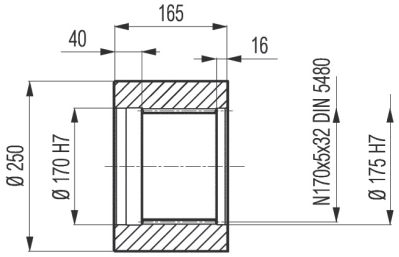

Materiale: Acciaio C40

Barre scanalate

B0A

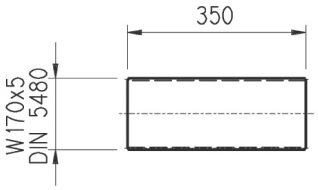

Materiale: Acciaio 18NiCrMo5 UNI 5331
da cementare e temprare 50-55 HRC

Giunto ad attrito

G0A

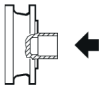

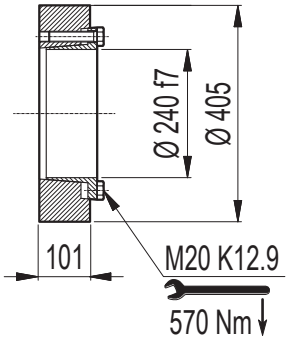

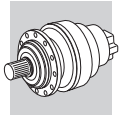

316M L 316M R

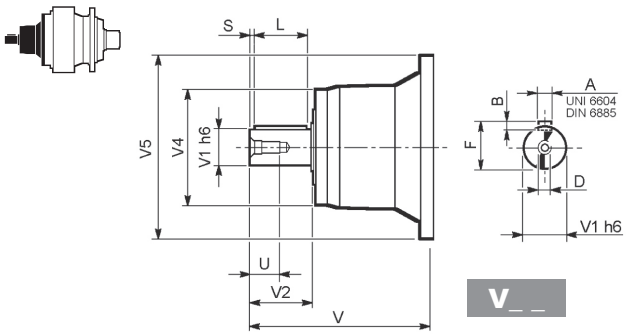

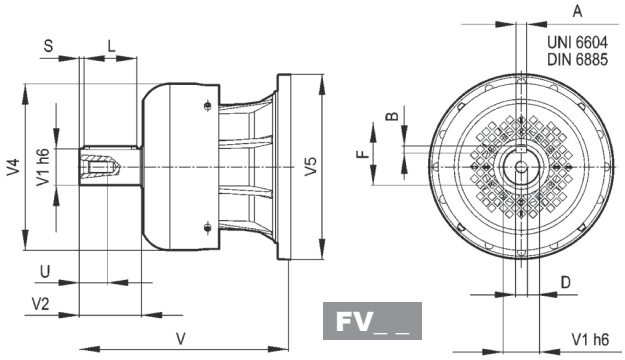

		V	V1	V2	V4	V5	A	B	F	L	S	D	U
316M L2	**V11B**	348	80	130	200	428	22	14	85	110	10	M16	36
	FV11B	456	80	130	347.5	428	22	14	85	110	10	M16	36
316M L3	**V07B**	315	80	130	200	345	22	14	85	110	10	M16	36
	FV07B	375	80	130	347.5	348	22	14	85	110	10	M16	36
	V07A	313	60	105	155	345	18	11	64	90	7.5	M16	36
	FV07A	363	60	105	309	348	18	11	64	90	7.5	M16	36
316M L4	**V05B**	239	48	82	155	245	14	9	51.5	70	6	M16	36
	FV05B	276	48	82	219.5	244	14	9	51.5	70	6	M16	36
316M R3 (B) (C)	**V06B**	307	60	105	155	292	18	11	64	90	7.5	M16	36
	FV06B	357	60	105	309	292	18	11	64	90	7.5	M16	36
316M R4	**V05B**	239	48	82	155	245	14	9	51.5	70	6	M16	36
	FV05B	276	48	82	219.5	244	14	9	51.5	70	6	M16	36

316M L 316M R

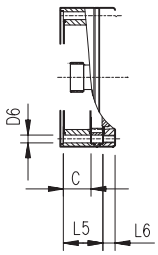

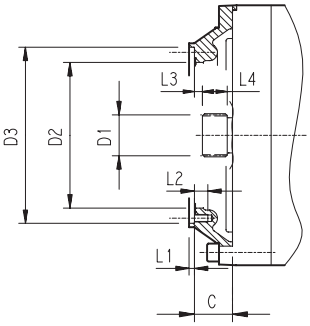

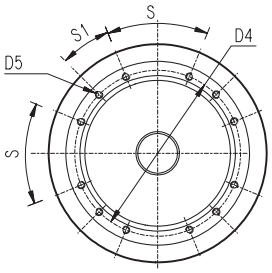

		C	D1	D2	D3	D4	D5	D6	L1	L2	L3	L4	L5	L6	S	S1	Input
316M L1	**V9AE**	116	100x94 DIN 5482	340	412 H7	390	M16 n° 18	—	7	30	8	55	—	—	20°	20°	E
316M L2	**V9AD**	81	80x74 DIN 5482	270	335 H7	314	M16 n° 8	—	5	30	8.5	40	—	—	60°	30°	D
316M L3	**V9AB**	51	58x53 DIN 5482	195	236 H7	222	M10 n° 12	—	4	18	11	22	—	—	45°	22.5°	B
316M L4	**V9AA**	37	40x36 DIN 5482	140	178 H7	165	M10 n° 8	—	4	18	9	18	—	—	45°	45°	A
316M R3 (B) (C)	**V9AB**	45	58x53 DIN 5482	195	236 H7	222	M10° 12	—	4	18	11	22	—	—	45°	22.5°	B
316M R4	**V9AA**	37	40x36 DIN 5482	140	178 H7	165	M10 n° 8	11	4	18	9	18	—	—	45°	45°	A

3/V 16M L

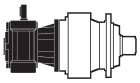

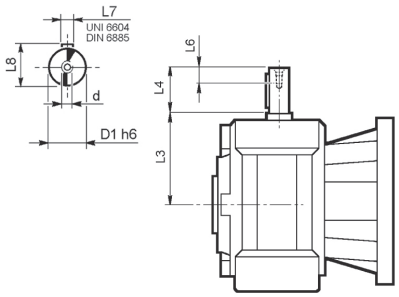

	D1 h6	L3	L4	L6	L7	L8	d
3/V 16M L3_HS	55	274	110	40	16	59	M16
3/V 16M L4_HS	35	185	65	20	10	38	M8

316M L 316M R 3/V 16M L

Carichi radiali ed assiali ammissibili sull'albero lento per un valore di $Fh_2 : n_2 \cdot h = 100000$

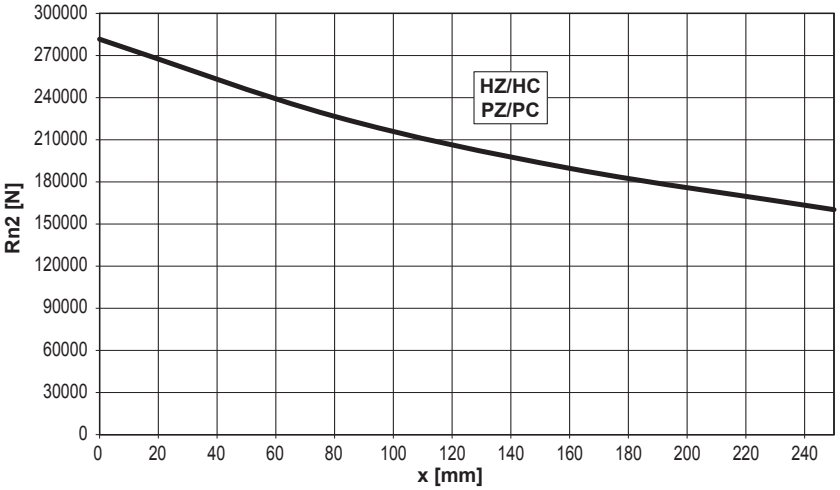

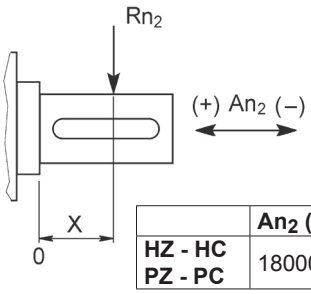

	An_2 (+)	An_2 (-)
HZ - HC PZ - PC	180000	150000

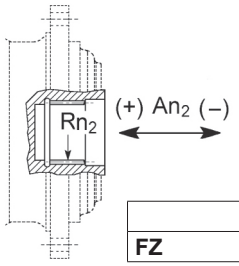

	Rn_2	An_2 (+/-)
FZ	69624	69624

Fattore fh_2 correttivo per carichi sugli alberi	$Fh_2 = n_2 \cdot h$		10000	25000	50000	100000	500000	1000000
	fh_2	FZ	**2.15**	**1.59**	**1.26**	**1.00**	**0.58**	**0.46**
		HC - PC	**1.16**	**1.00**	**1.00**	**1.00**	**0.62**	**0.50**
		HZ - PZ	**1.19**	**1.02**	**1.02**	**1.00**	**0.62**	**0.50**

Carichi radiali ammissibili sull'albero veloce per un valore di $Fh_1 : n_1 \cdot h = 250000$

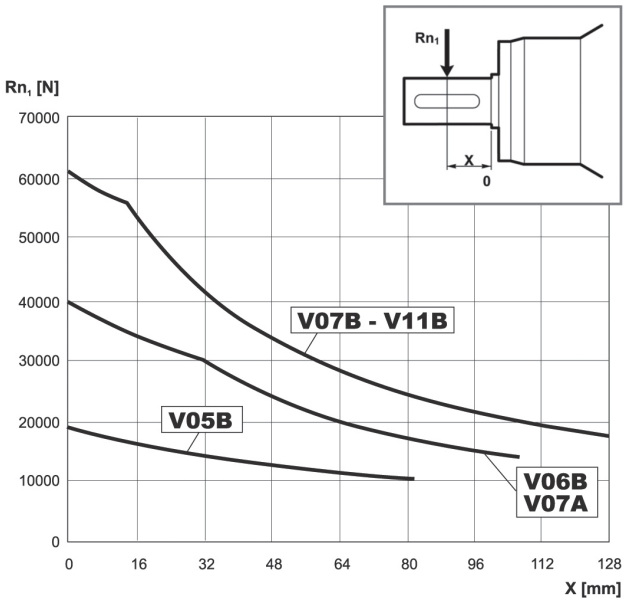

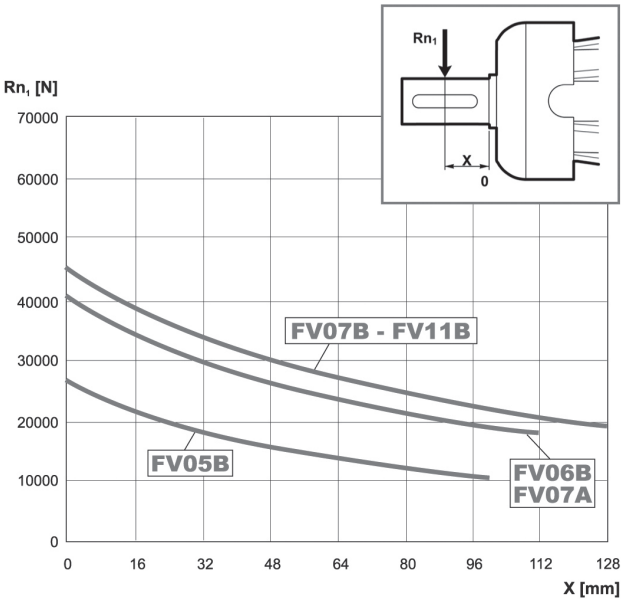

Fattore fh_1 correttivo per carichi sugli alberi	$Fh_1 = n_1 \cdot h$	250000	500000	1000000	2000000	5000000	10000000
	fh_1	**1**	**0.79**	**0.63**	**0.50**	**0.37**	**0.29**

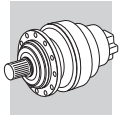

317M L

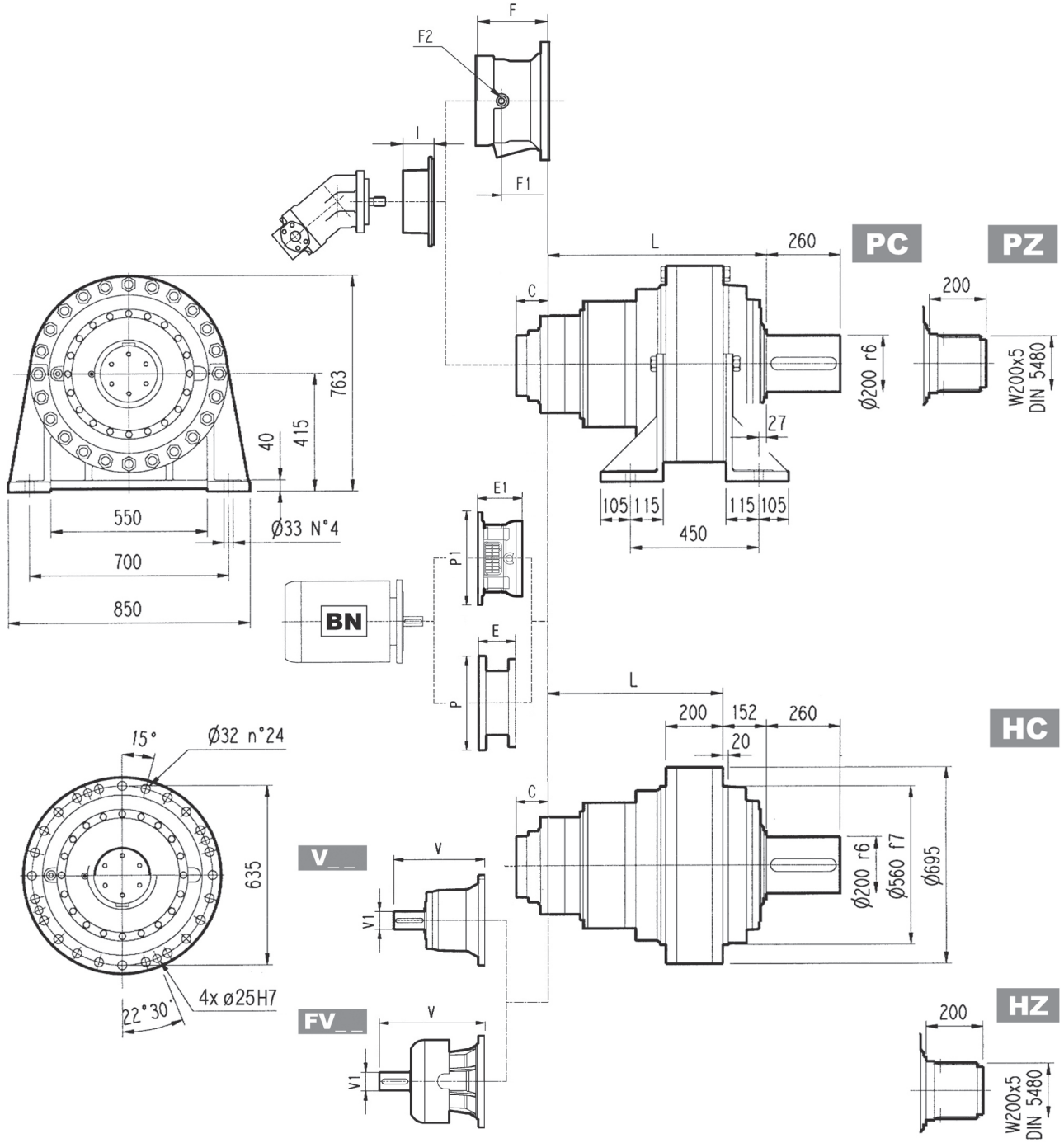

	L				Kg			
	PC - PZ	HC - HZ	FZ - FZP	FP	PC - PZ	HC - HZ	FZ - FZP	FP
317M L1	315	163	163	163	950	800	750	800
317M L2	624	472	472	472	1080	930	880	930
317M L3	774	622	622	622	1140	990	940	990
317M L4	862	710	710	710	1152	1000	952	1000

	V	V1	Kg	V	V1	Kg	V	V1	Kg	V	V1	Kg	C	Input	I	F	F1	F2	Type	Input	Kg
317M L1	—	—	—	—	—	—	—	—	—	—	—	—	181	F		—	—	—	—	—	—
317M L2	343	80	55	—	—	—	451	80	71	—	—	—	75	D		—	—	—	—	—	—
317M L3	315	80	35	313	60	28	375	80	48	363	60	34	51	B	461	201	153	1/4 G	6	B	28
317M L4	239	48	15	—	—	—	276	48	17	—	—	—	37	A		145	95	1/4 G	5	A	16

317M L

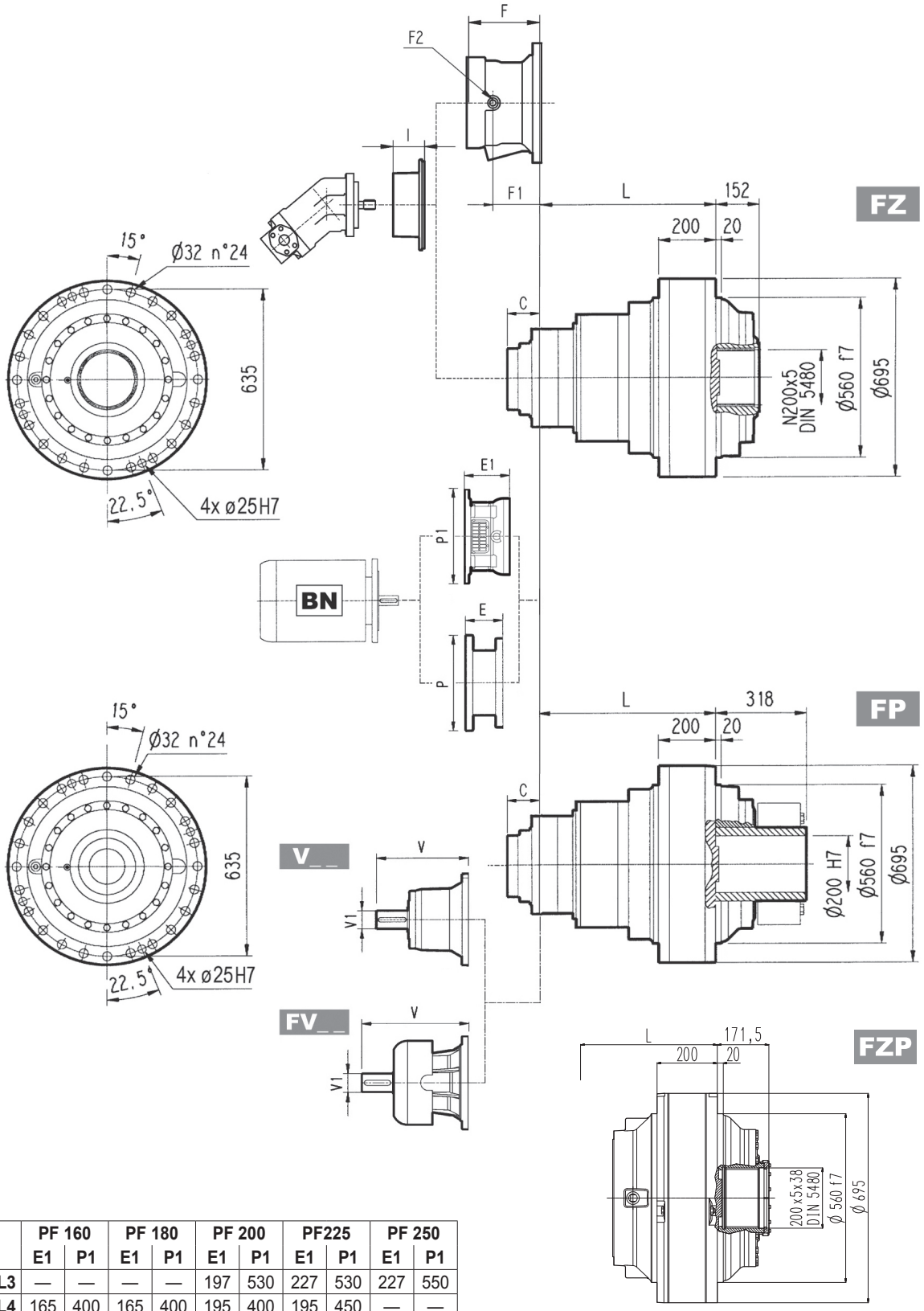

	PF 160		PF 180		PF 200		PF225		PF 250	
	E1	P1	E1	P1	E1	P1	E1	P1	E1	P1
317M L3	—	—	—	—	197	530	227	530	227	550
317M L4	165	400	165	400	195	400	195	450	—	—

NOTA: Per esecuzione R contattare il Servizio Tecnico Bonfiglioli

FP	M_{2max} = 242000 Nm

	P132		P160		P180		P200		P225		P250	
	E	P	E	P	E	P	E	P	E	P	E	P
317M L3	—	—	—	—	196	350	186	400	216	450	216	550
317M L4	114	300	144	350	144	350	174	400	—	—	—	—

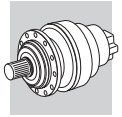

317M R

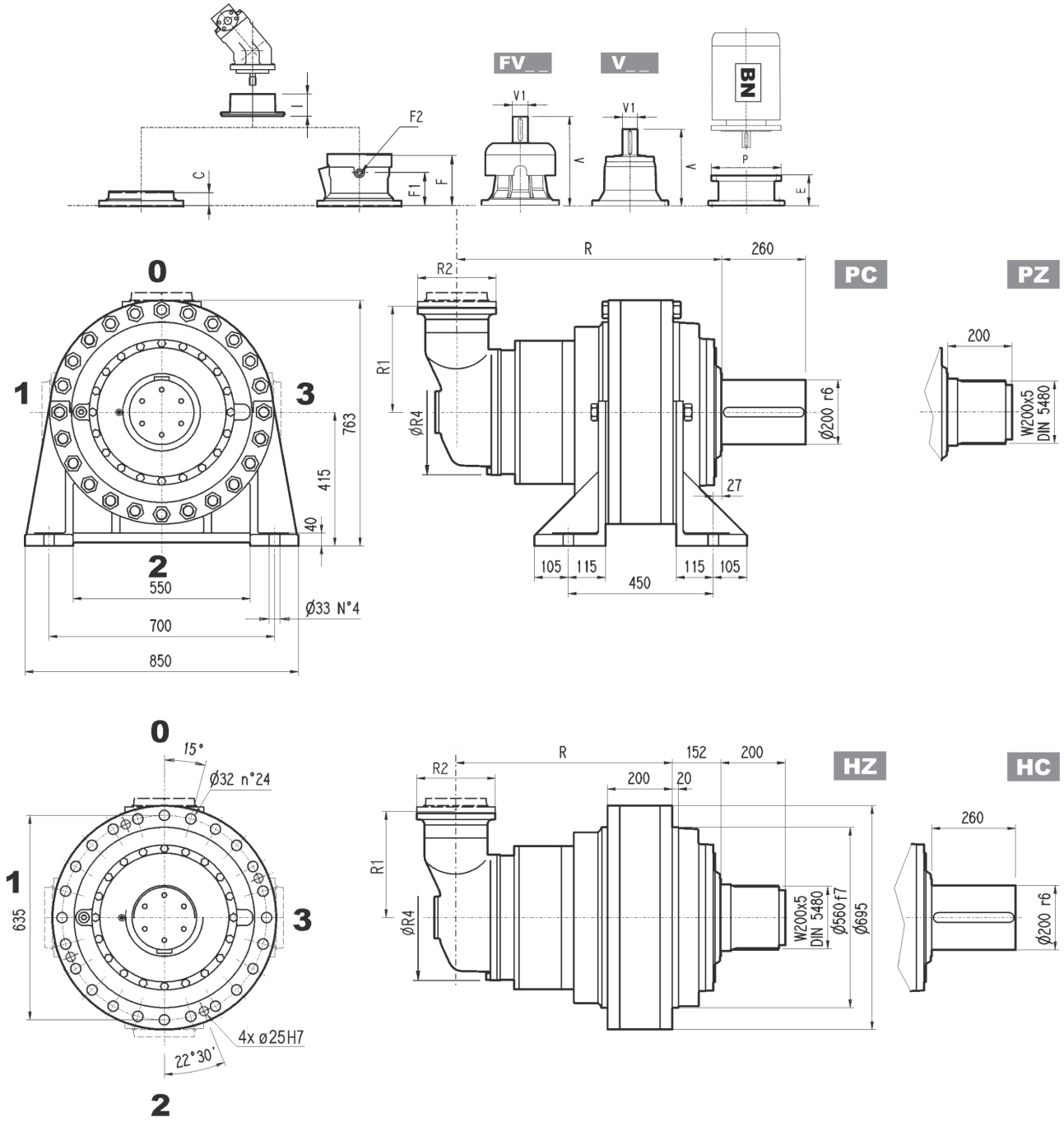

	R				R1	R2	R4	Kg			
	PC-PZ	HC-HZ	FZ - FZP	FP				PC-PZ	HC-HZ	FZ - FZP	FP
317M R3 (B)	853	701	701	701	345	292	400	1210	1060	1010	1060
317M R3 (C)	853	701	701	701	390	292	480	1220	1070	1020	1070
317M R4	892	740	740	740	225	245	345	1190	1040	990	1040

	V	V1	Kg	V	V1	Kg	V	V1	Kg	V	V1	Kg	C	Input	I	F	F1	F2	Type	Input	Kg
317M R3 (B)	307	60	23	—	—	—	357	60	28	—	—	—	45	B		195	147	1/4 G	6	B	28
317M R3 (C)	307	60	23	—	—	—	357	60	28	—	—	—	45	B		195	147	1/4 G	6	B	28
317M R4	239	48	15	—	—	—	276	48	17	—	—	—	37	A	461	105	65	1/4 G	4	A	10

317M R

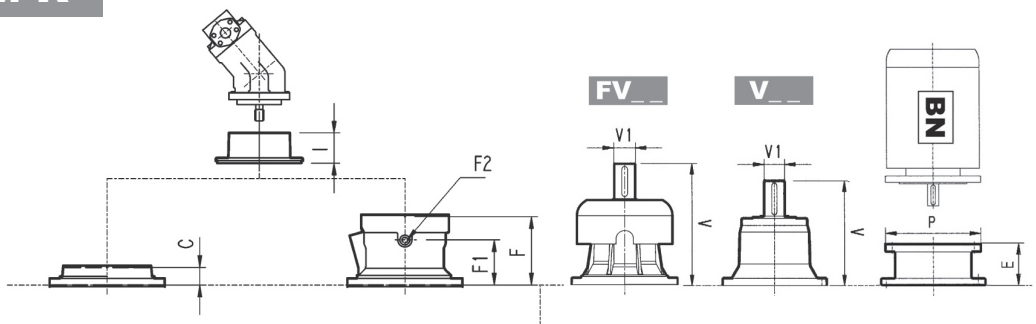

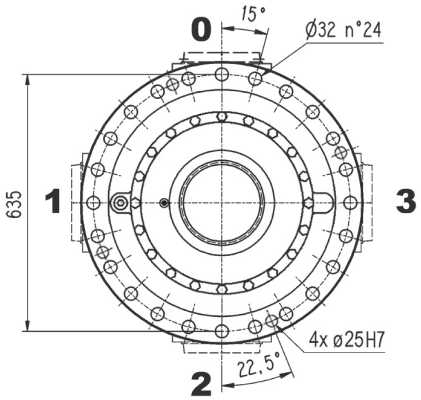

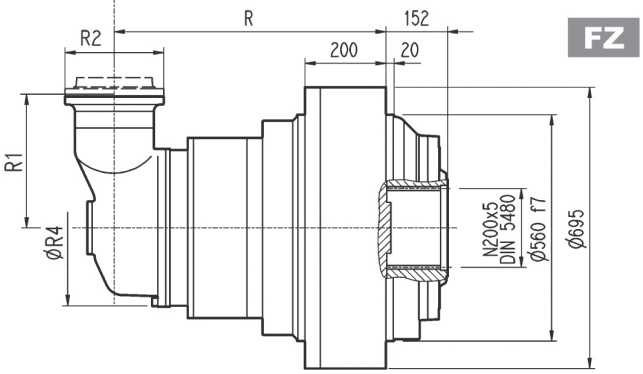

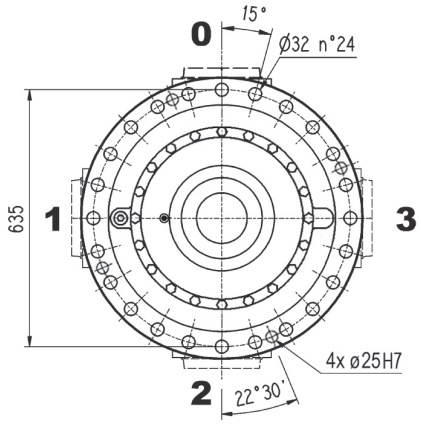

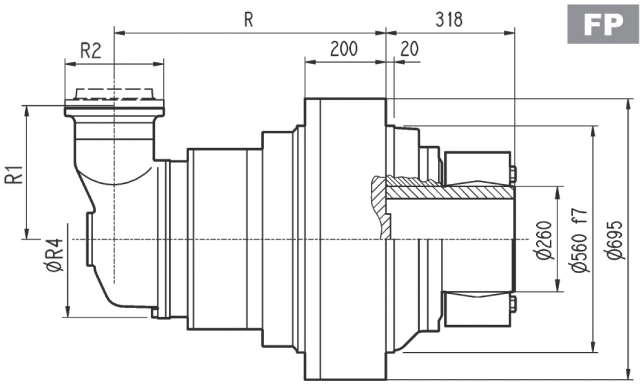

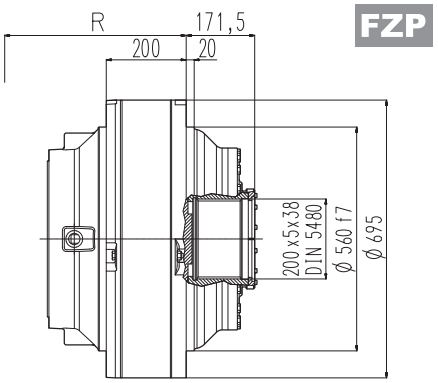

FP	M_{2max} = 242000 Nm

	P132		P160		P180		P200		P225		P250	
	E	P	E	P	E	P	E	P	E	P	E	P
317M R3 (B)	—	—	—	—	152	350	182	400	212	450	193	550
317M R3 (C)	—	—	—	—	152	350	182	400	212	450	193	550
317M R4	114	300	144	350	144	350	174	400	—	—	—	—

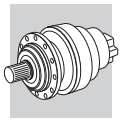

3/V 17M L3

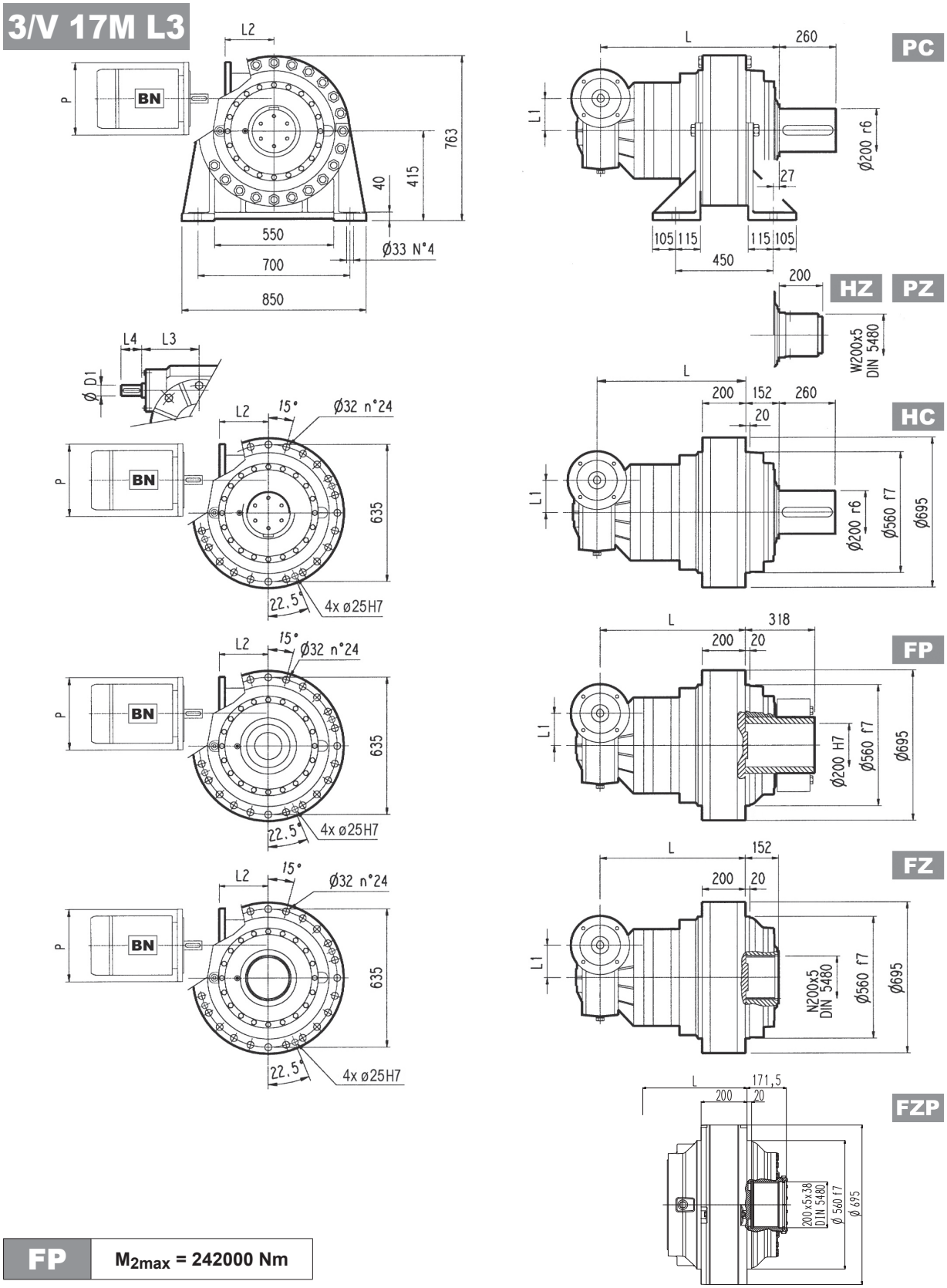

FP	M_{2max} = 242000 Nm

	L				L1	D1	L3	L4	Kg			
	PC - PZ	HC - HZ	FZ - FZP	FP					PC - PZ	HC - HZ	FZ - FZP	FP
3/V 17M L3	894	745	745	745	250	55	276	110	1400	1250	1200	1250

	P132		P160		P180		P200		P225	
	L2	P	L2	P	L2	P	L2	P	L2	P
3/V 17M L3	531	300	506	350	506	350	531	400	536	450

3/V 17M L4

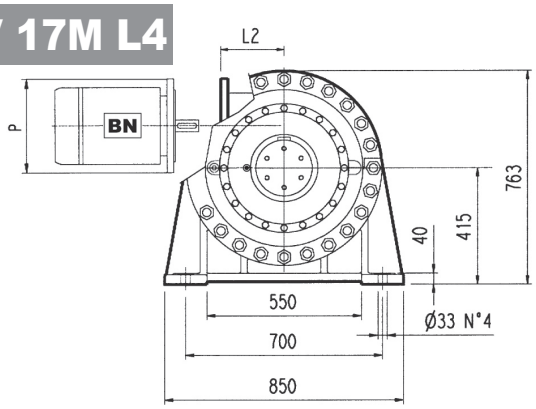

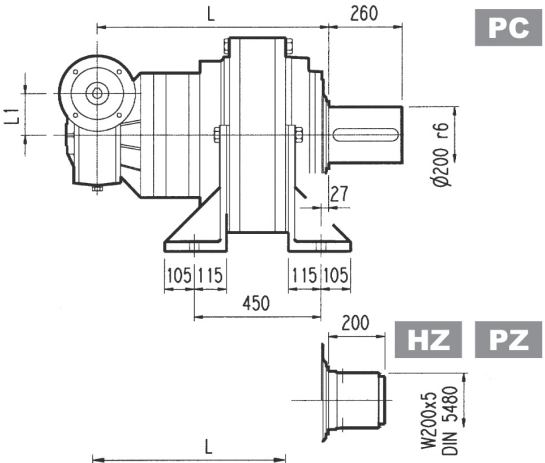

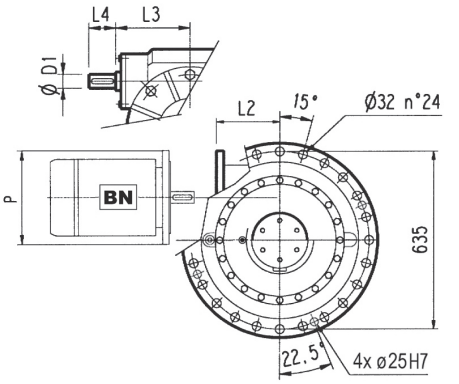

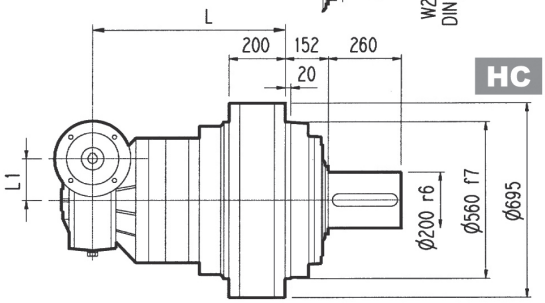

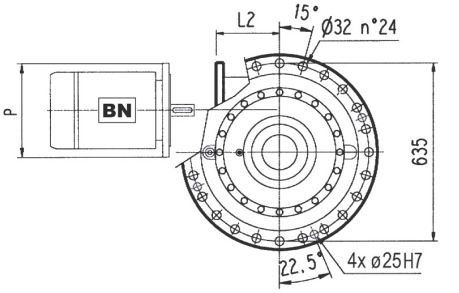

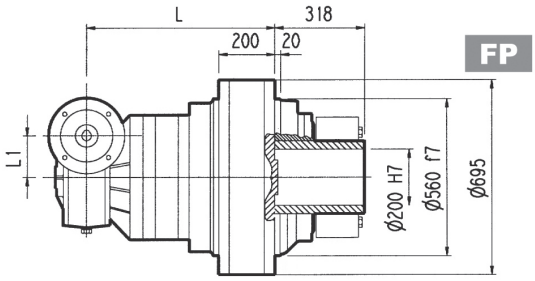

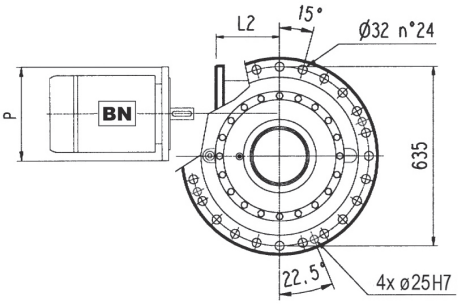

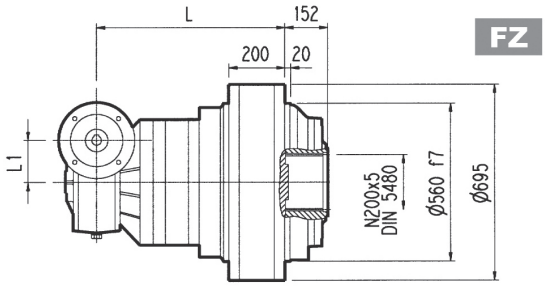

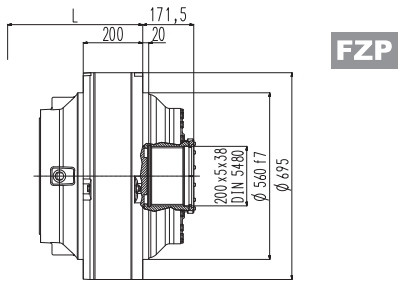

FP	M_{2max} = 242000 Nm

	L				L1	D1	L3	L4	Kg			
	PC - PZ	HC - HZ	FZ - FZP	FP					PC - PZ	HC - HZ	FZ - FZP	FP
3/V 17M L4	975	823	823	823	185.4	40	214.5	70	1250	1090	1040	1090

	P100	P112	P132		P160		P180	
	P	P	L2	P	L2	P	L2	P
3/V 17M L4	250	250	217	300	217	350	217	350

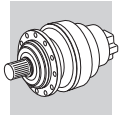

317M L 317M R 3/V 17M L

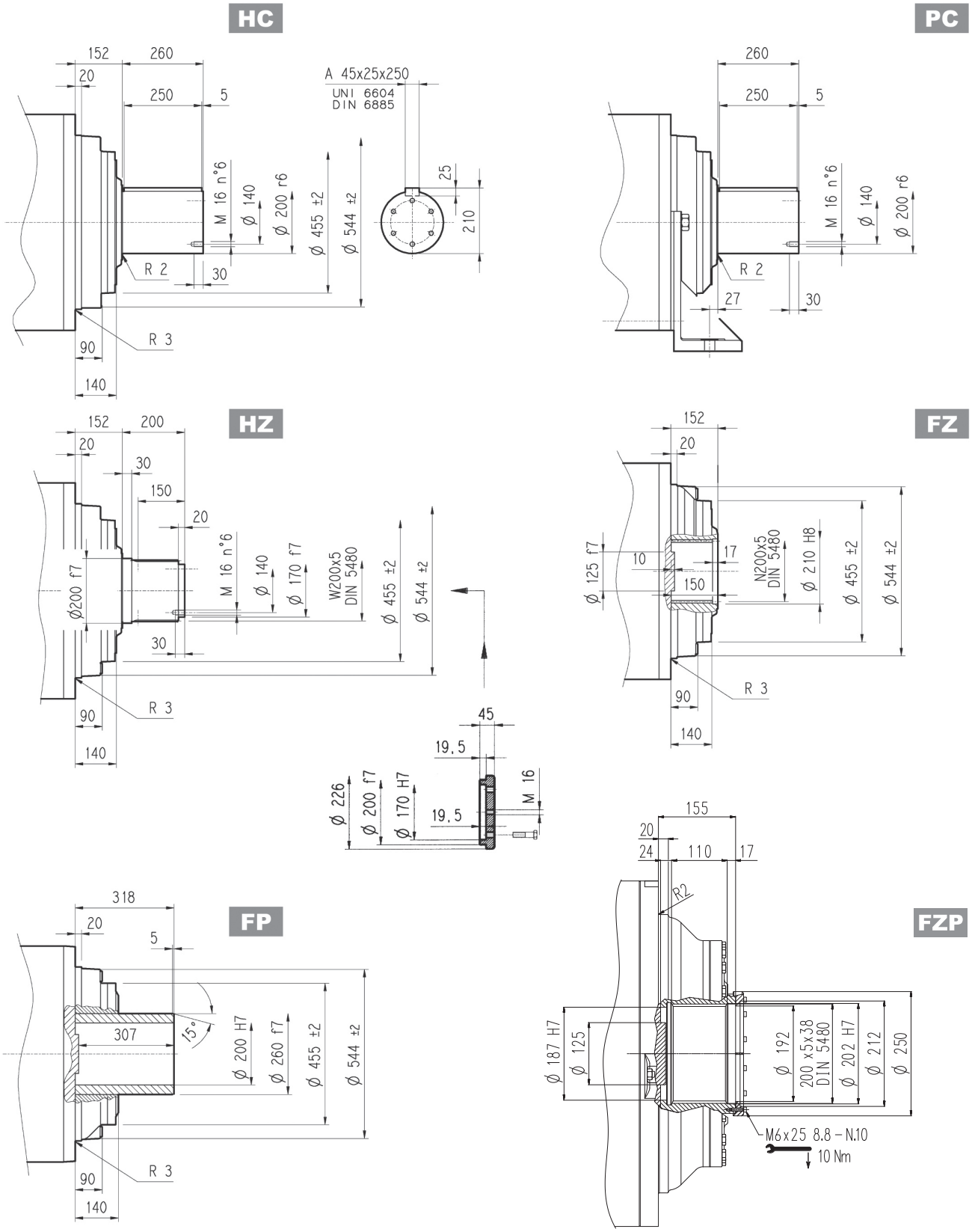

FP	M_{2max} = 242000 Nm

Flangia

W0A

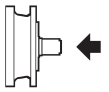

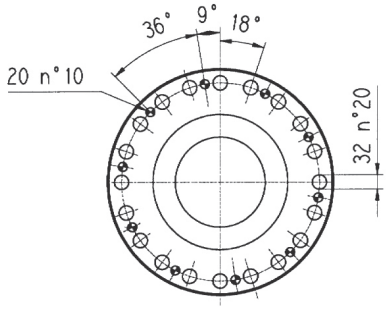

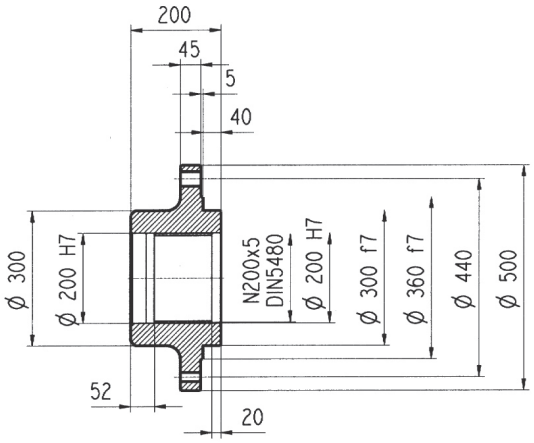

Materiale: Acciaio C40

Manicotti lisci

M0A

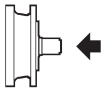

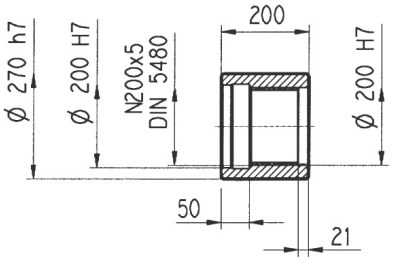

Materiale: Acciaio 16CrNi4

Giunto ad attrito

G0A

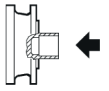

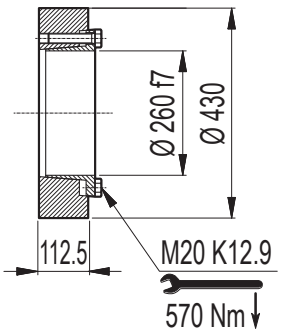

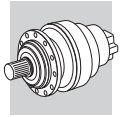

317M L 317M R

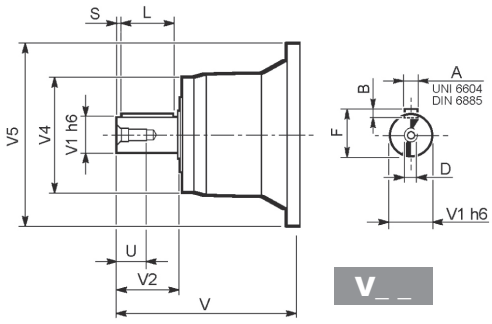

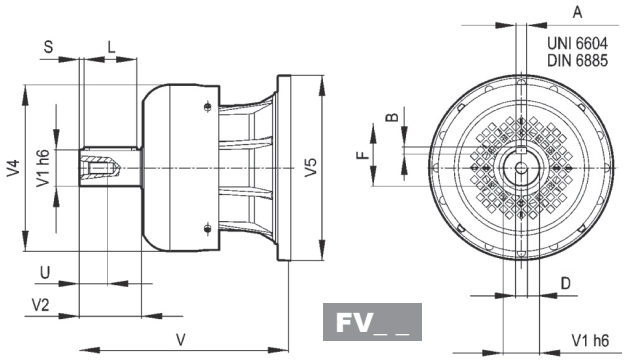

		V	V1	V2	V4	V5	A	B	F	L	S	D	U
317M L2	**V11B**	343	80	130	200	445	22	14	85	110	10	M16	36
	FV11B	451	80	130	347.5	445	22	14	85	110	10	M16	36
317M L3	**V07B**	315	80	130	200	345	22	14	85	110	10	M16	36
	FV07B	375	80	130	347.5	348	22	14	85	110	10	M16	36
	V07A	313	60	105	155	345	18	11	64	90	7.5	M16	36
	FV07A	363	60	105	309	348	18	11	64	90	7.5	M16	36
317M L4	**V05B**	239	48	82	155	245	14	9	51.5	70	6	M16	36
	FV05B	276	48	82	219.5	244	14	9	51.5	70	6	M16	36
317M R3 (B) (C)	**V06B**	307	60	105	155	292	18	11	64	90	7.5	M16	40
	FV06B	357	60	105	309	292	18	11	64	90	7.5	M16	36
317M R4	**V05B**	239	48	82	155	245	14	9	51.5	70	6	M16	36
	FV05B	276	48	82	219.5	244	14	9	51.5	70	6	M16	36

317M L 317M R

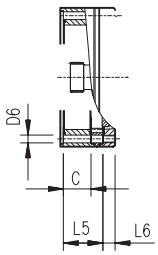

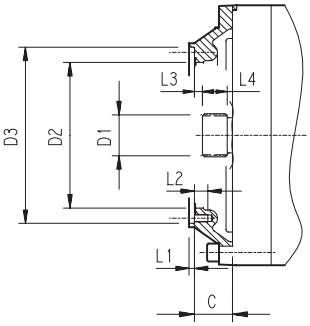

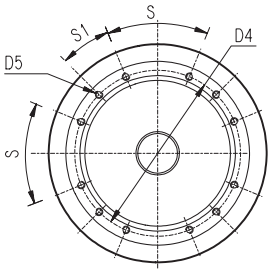

		C	D1	D2	D3	D4	D5	D6	L1	L2	L3	L4	L5	L6	S	S1	Input
317M L1	**V9AF**	181	120x3 DIN 5480	365	390 g7	415	M16 n°18	—	4	30	3	65	—	—	20°	20°	F
317M L2	**V9AD**	75	80x74 DIN 5482	270	335 H7	314	M16 n°8	—	5	30	9.5	40	—	—	60°	30°	D
317M L3	**V9AB**	51	58x53 DIN 5482	195	236 H7	222	M10 n°12	—	4	18	11	22	—	—	45°	22.5°	B
317M L4	**V9AA**	37	40x36 DIN 5482	140	178 H7	165	M10 n°8	—	4	18	9	18	—	—	45°	45°	A
317M R4	**V9AA**	37	40x36 DIN 5482	140	178 H7	165	M10 n°8	11	4	18	9	18	—	—	45°	45°	A
317M R3 (B) (C)	**V9AB**	45	58x53 DIN 5482	195	236 H7	222	M10 n°12	—	4	18	11	22	—	—	45°	22.5°	B

3/V 17M L

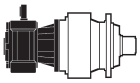

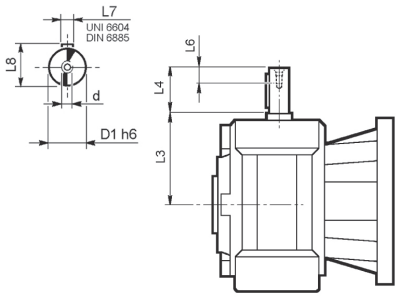

	D1 h6	L3	L4	L6	L7	L8	d
3/V 17M L3_HS	55	276	110	40	16	59	M16
3/V 17M L4_HS	40	214.5	70	20	12	43	M8

Carichi radiali ed assiali ammissibili sull'albero lento per un valore di $Fh_2 : n_2 \cdot h = 100000$

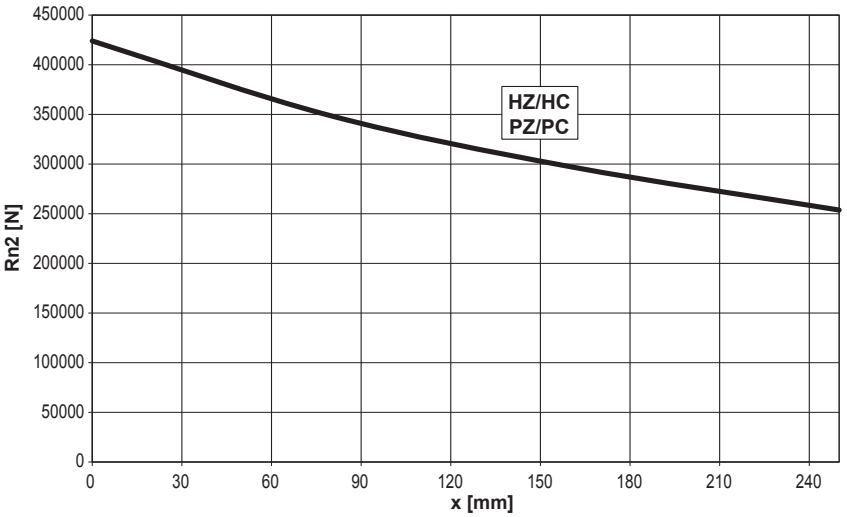

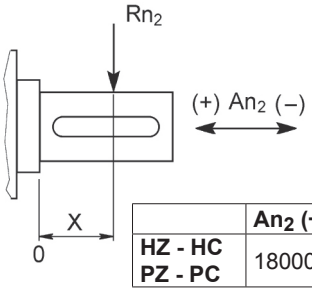

	An_2 (+)	An_2 (-)
HZ - HC PZ - PC	180000	150000

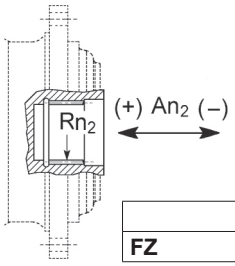

	Rn_2	An_2 (+/-)
FZ	69624	69624

Fattore fh_2 correttivo per carichi sugli alberi	$Fh_2 = n_2 \cdot h$		10000	25000	50000	100000	500000	1000000
	fh_2	FZ	**2.15**	**1.59**	**1.26**	**1.00**	**0.58**	**0.46**
		HZ - HC - PZ - PC	**1.50**	**1.50**	**1.23**	**1.00**	**0.62**	**0.50**

Carichi radiali ammissibili sull'albero veloce per un valore di $Fh_1 : n_1 \cdot h = 250000$

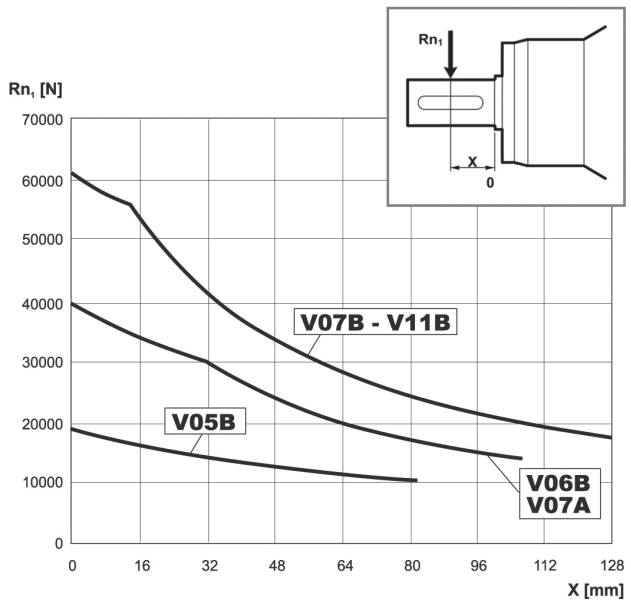

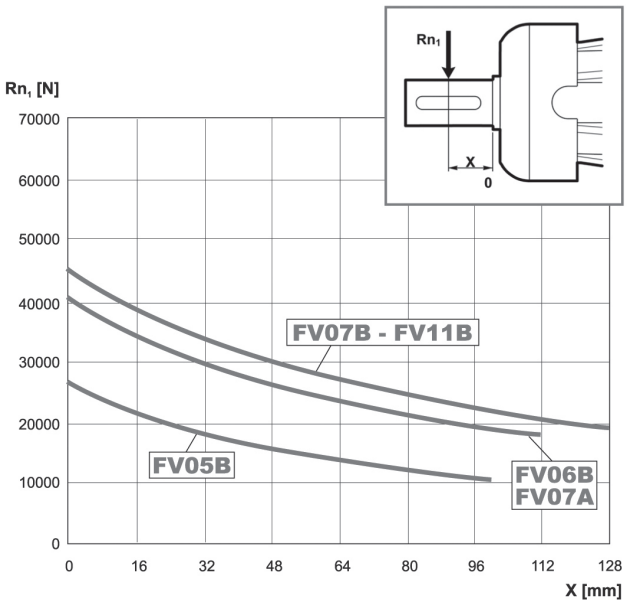

Fattore fh_1 correttivo per carichi sugli alberi	$Fh_1 = n_1 \cdot h$	250000	500000	1000000	2000000	5000000	10000000
	fh_1	**1**	**0.79**	**0.63**	**0.50**	**0.37**	**0.29**

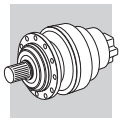

318M L

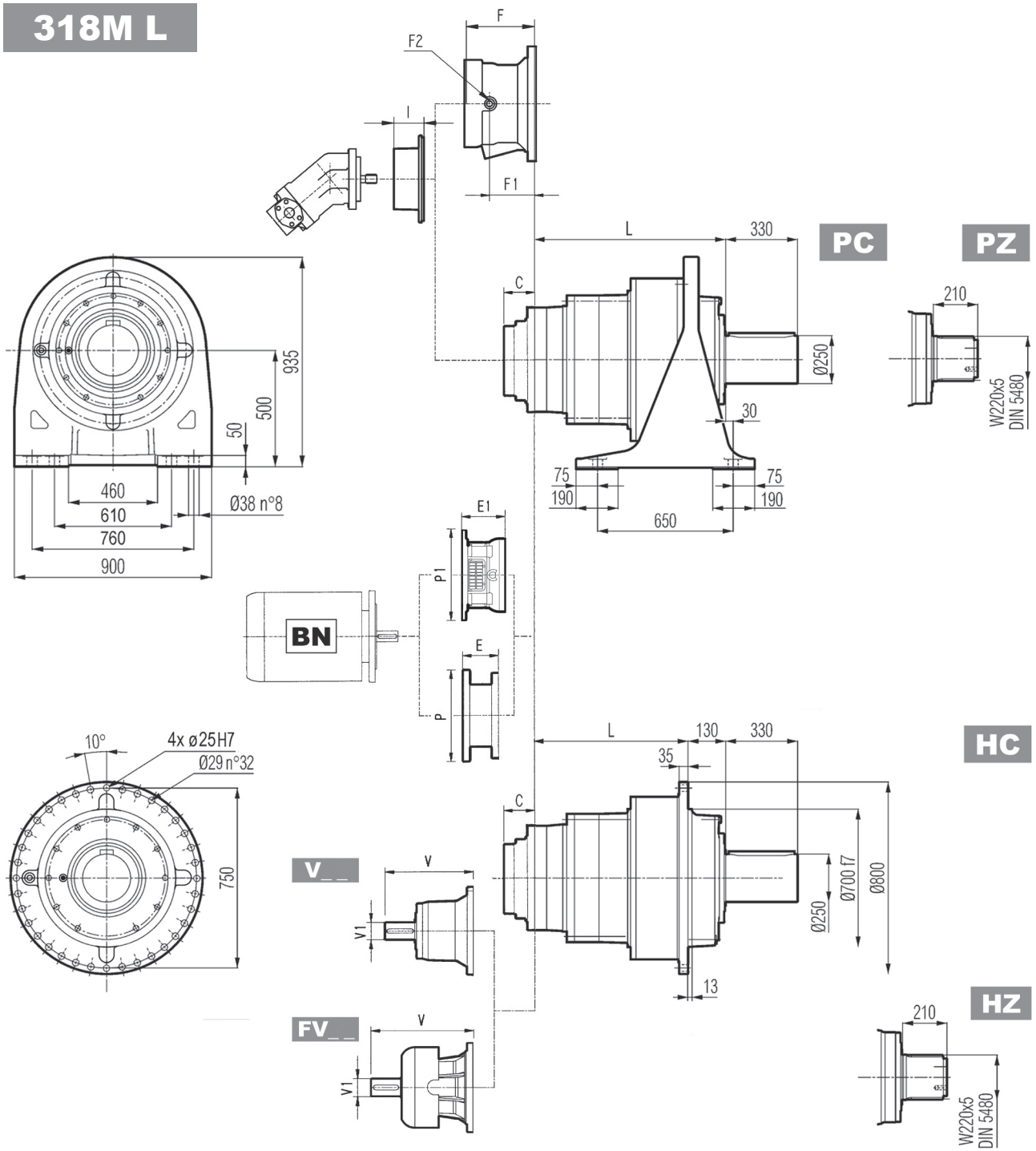

	L				Kg			
	PC - PZ	HC - HZ	FZ - FZP	FP	PC - PZ	HC - HZ	FZ - FZP	FP
318M L1	332	202	202	202	1250	950	800	830
318M L2	677	547	547	547	1500	1200	1050	1080
318M L3	889	759	759	759	1600	1300	1150	1180
318M L4	1022	892	892	892	1650	1350	1200	1230

	V	V1	Kg	V	V1	Kg	V	V1	Kg	V	V1	Kg	C	Input	I	F	F1	F2	Type	Input	Kg
318M L1	—	—	—	—	—	—	—	—	—	—	—	—	208	G		—	—	—	—	—	—
318M L2	556	120	125	—	—	—	—	—	—	—	—	—	116	E		—	—	—	—	—	—
318M L3	348	80	55	—	—	—	456	80	85	—	—	—	81	D	461	232	185	1/4 G	6	B	28
318M L4	315	80	35	313	60	28	375	80	48	363	60	34	51	B		201	153	1/4 G	6	B	28

318M L

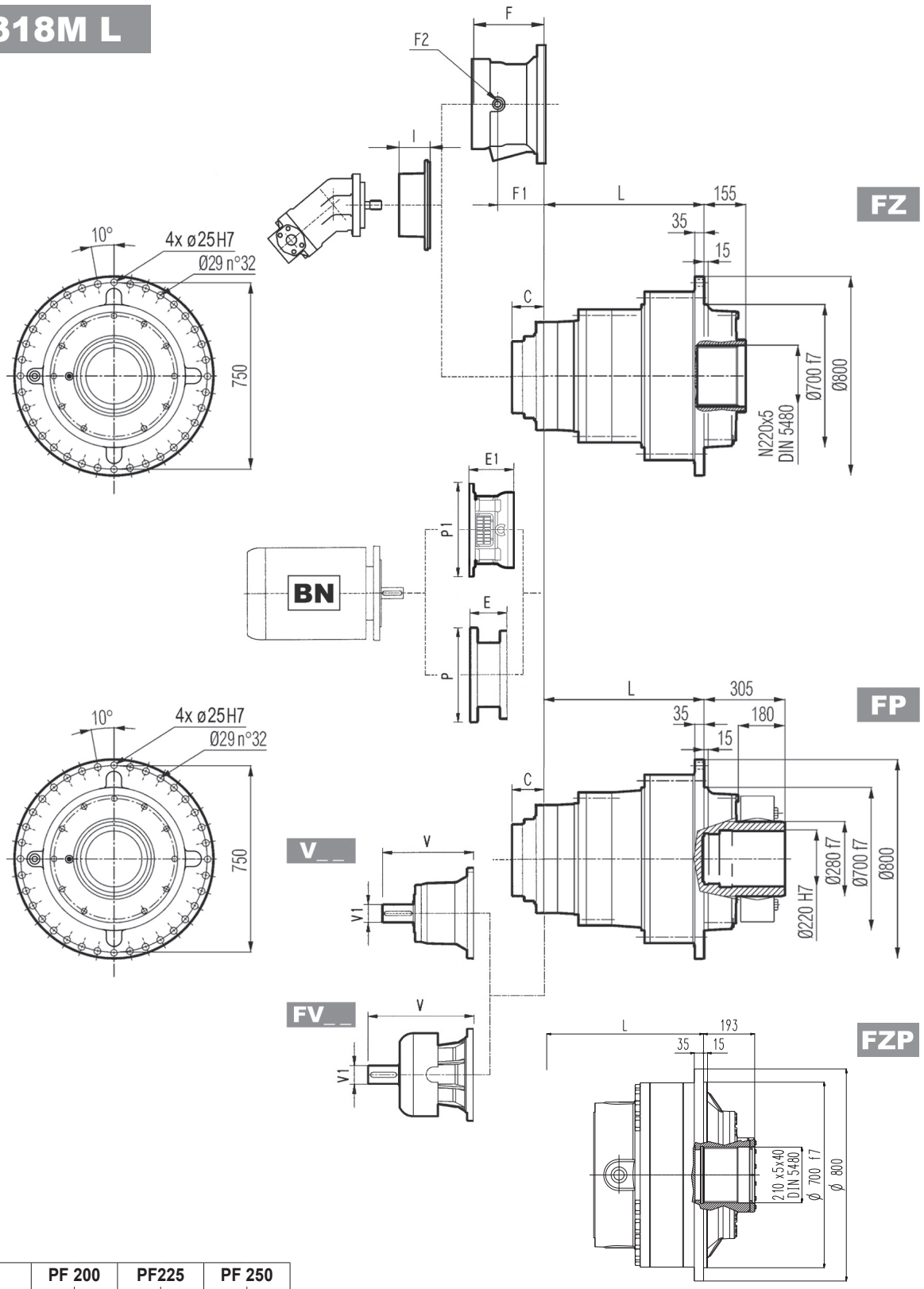

	PF 200		PF225		PF 250	
	E1	P1	E1	P1	E1	P1
318M L3	—	—	250	580	250	580
318M L4	197	530	227	530	227	550

NOTA: Per esecuzione R contattare il Servizio Tecnico Bonfiglioli

FP	M_{2max} = 322000 Nm

	P180		P200		P225		P250	
	E	P	E	P	E	P	E	P
318M L3	—	—	267	400	297	450	297	550
318M L4	195	350	186	400	216	450	215	550

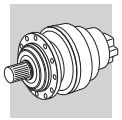

318M R

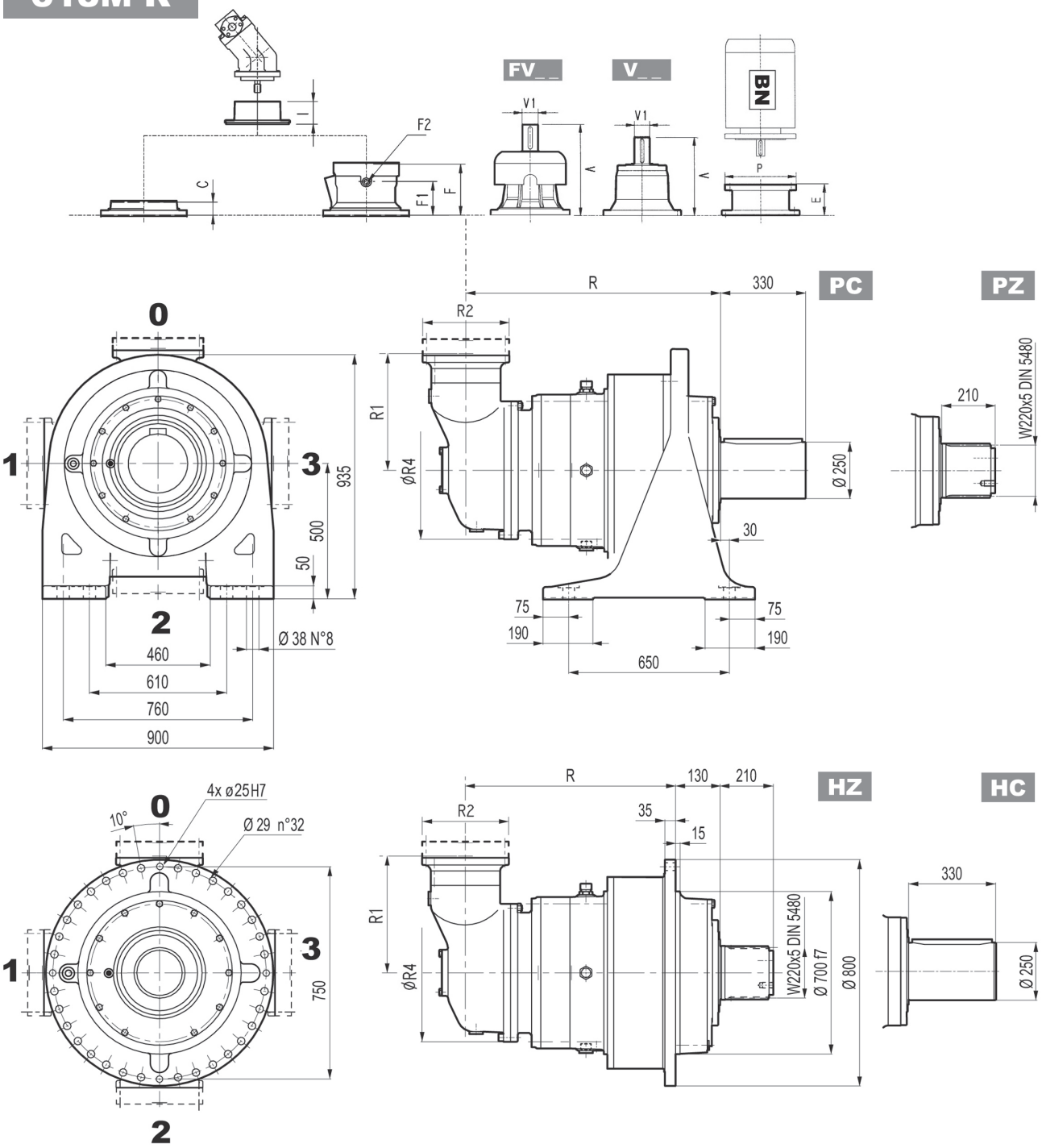

	R				R1	R2	R4	Kg			
	PC-PZ	HC-HZ	FZ - FZP	FP				PC-PZ	HC-HZ	FZ - FZP	FP
318M R4 (B)	1115	985	985	985	345	292	400	1720	1420	1270	1300
318M R4 (C)	1115	985	985	985	390	292	480	1730	1430	1280	1310

	V	V1	Kg	V	V1	Kg	V	V1	Kg	V	V1	Kg	C	Input	I	F	F1	F2	Type	Input	Kg
318M R4 (B)	307	60	23	—	—	—	357	60	28	—	—	—	45	B	461	195	147	1/4 G	6	B	28
318M R4 (C)	307	60	23	—	—	—	357	60	28	—	—	—	45	B		195	147	1/4 G	6	B	28

318M R

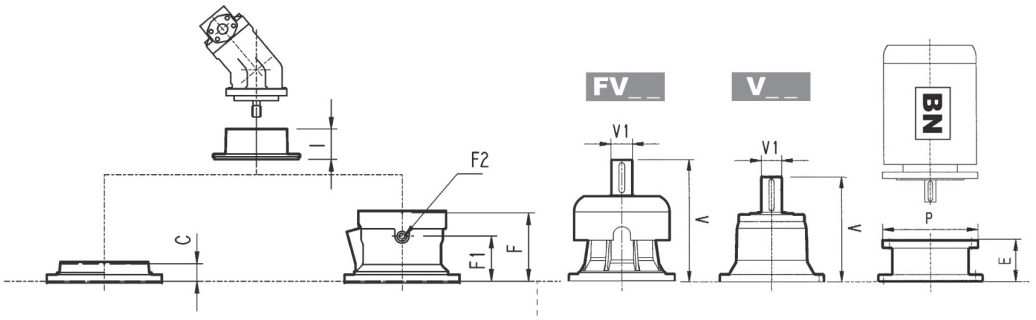

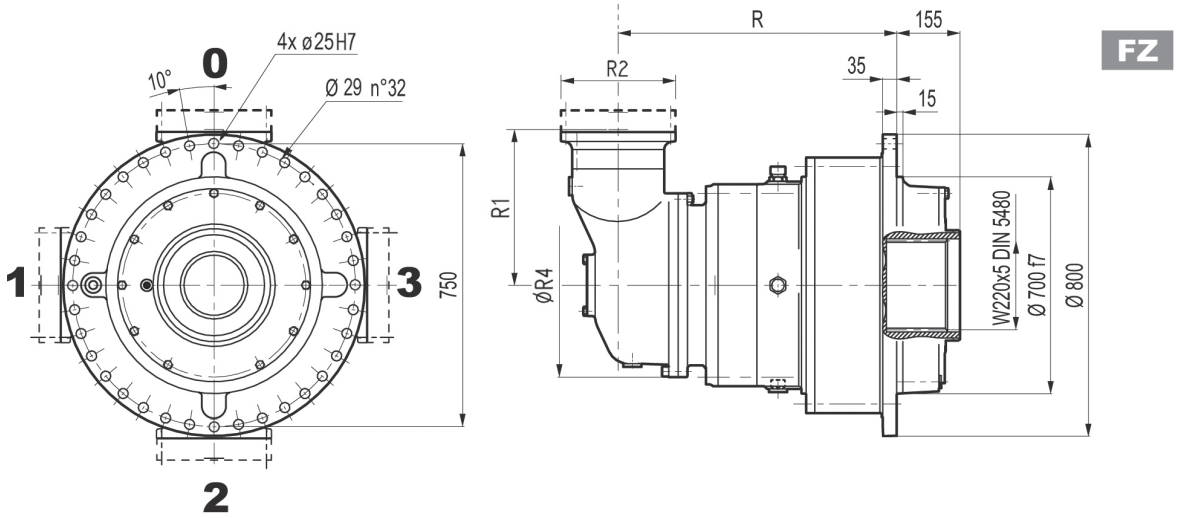

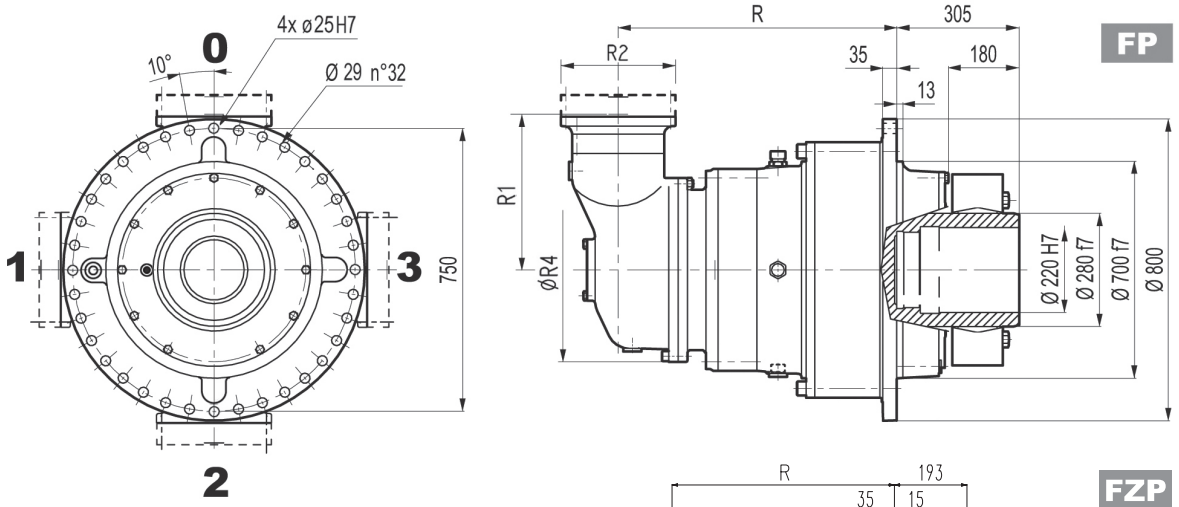

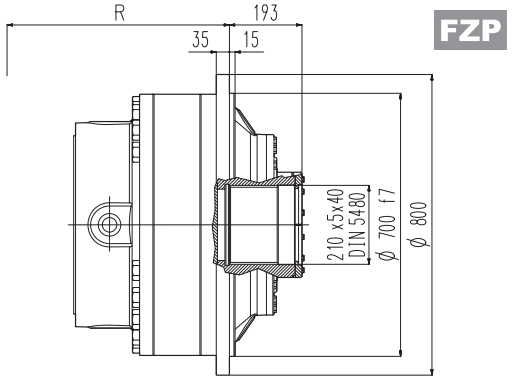

FP	M_{2max} = 322000 Nm

	P132		P160		P180		P200		P225		P250	
	E	P	E	P	E	P	E	P	E	P	E	P
318M R4 (B)	—	—	—	—	152	350	182	400	212	450	193	550
318M R4 (C)	—	—	—	—	152	350	182	400	212	450	193	550

3/V 18M L4

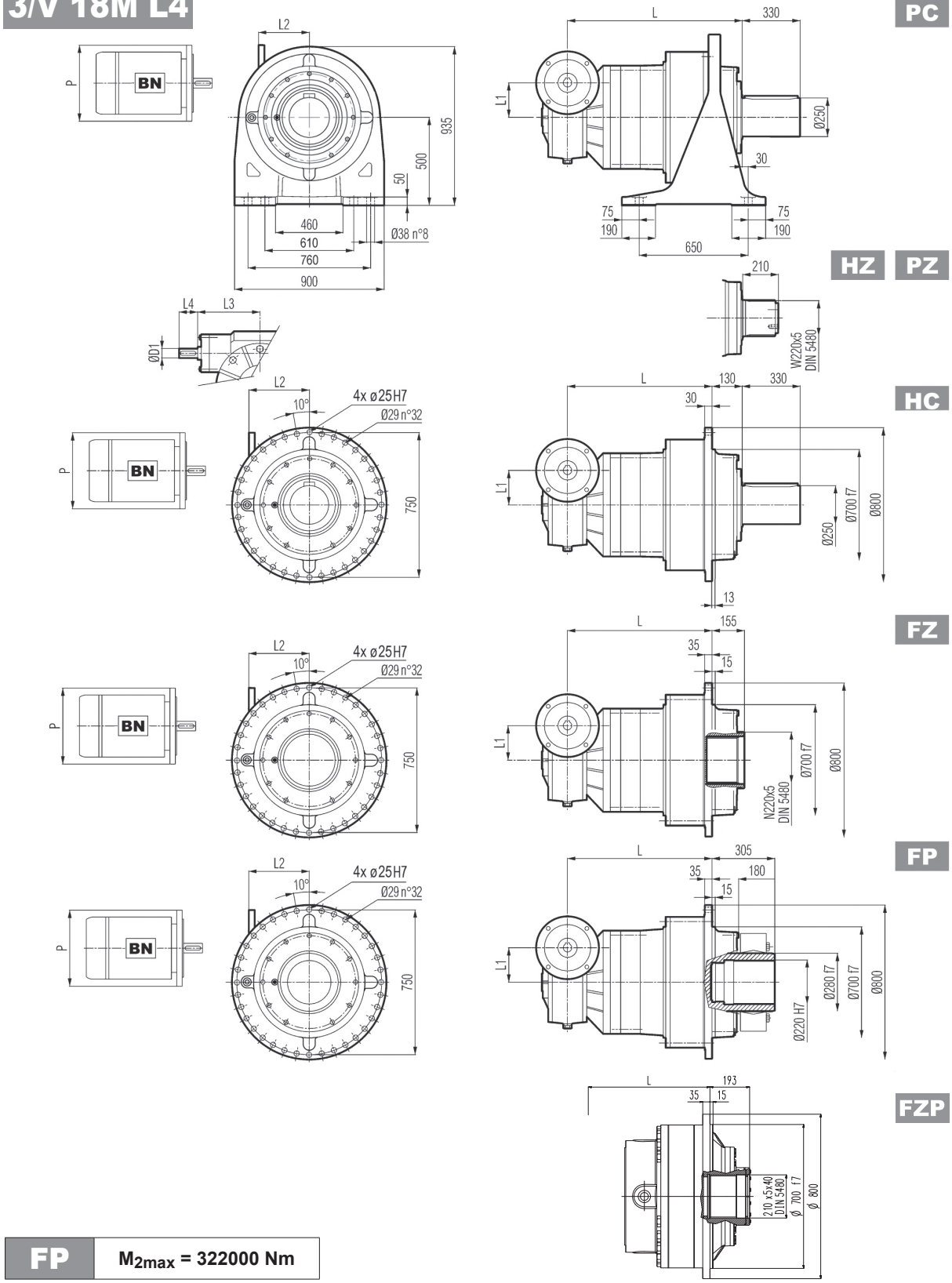

FP | M_{2max} = 322000 Nm

	L				L1	D1	L3	L4	Kg			
	PC - PZ	HC - HZ	FZ - FZP	FP					PC - PZ	HC - HZ	FZ - FZP	FP
3/V 18M L4	1114	984	984	984	210	48	230	110	1810	1510	1360	1390

	P132		P160		P180		P200		P225	
	L2	P	L2	P	L2	P	L2	P	L2	P
3/V 18M L4	485	300	460	350	460	350	485	400	490	450

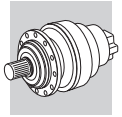

318M L | 318M R | 3/V 18M L4

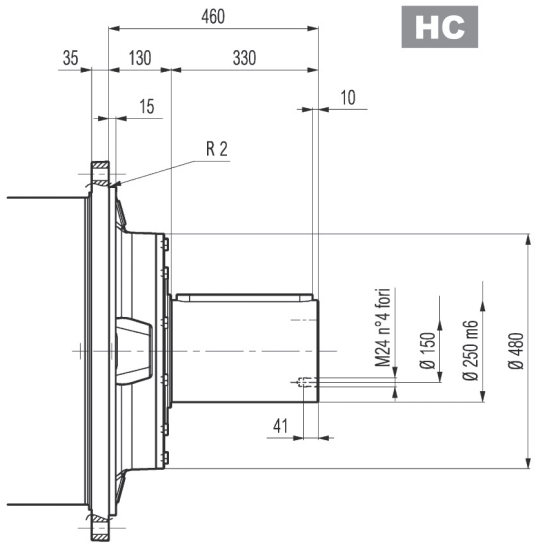

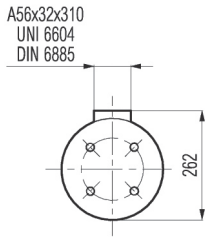

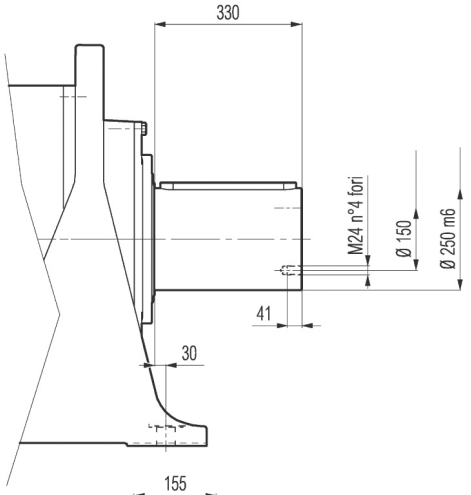

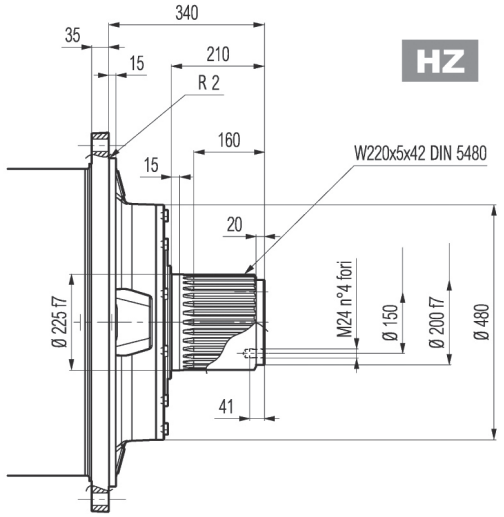

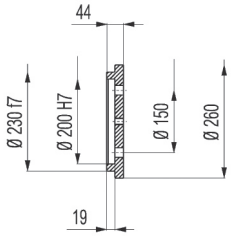

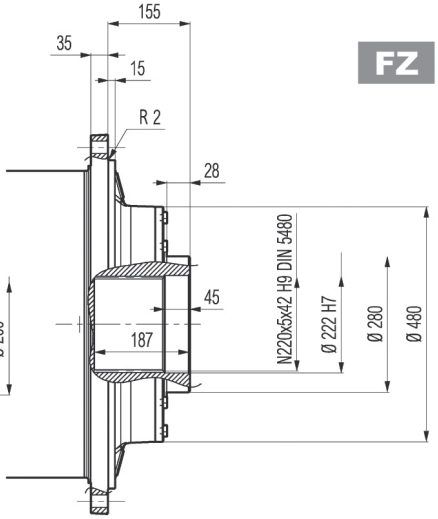

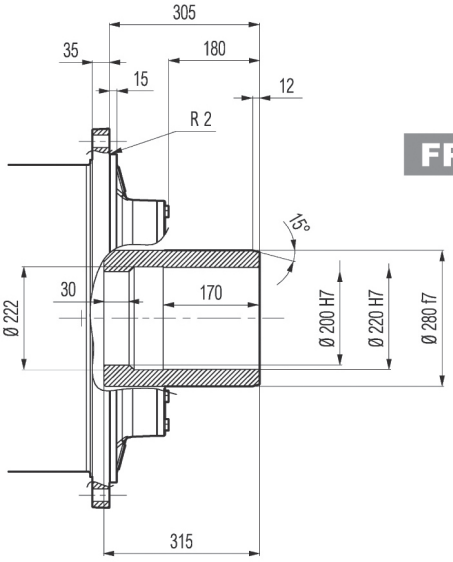

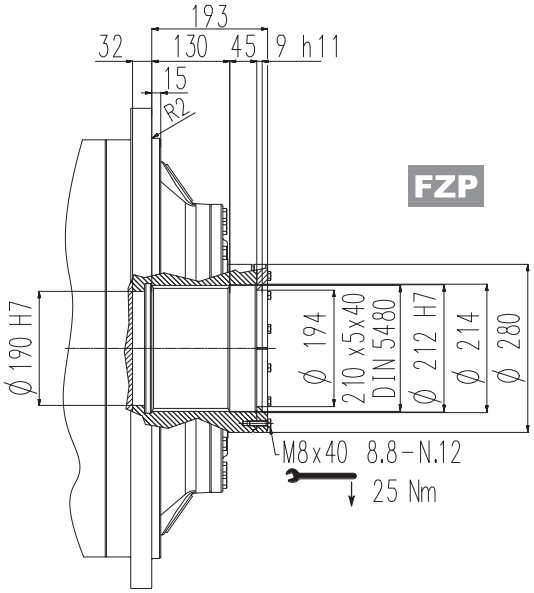

FP	M_{2max} = 322000 Nm

Flangia

W0A

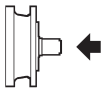

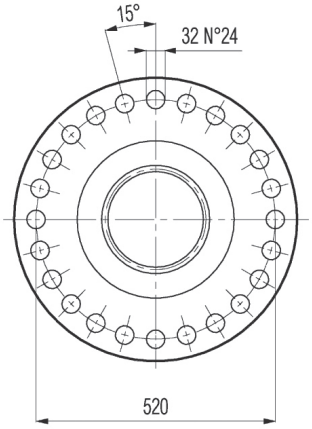

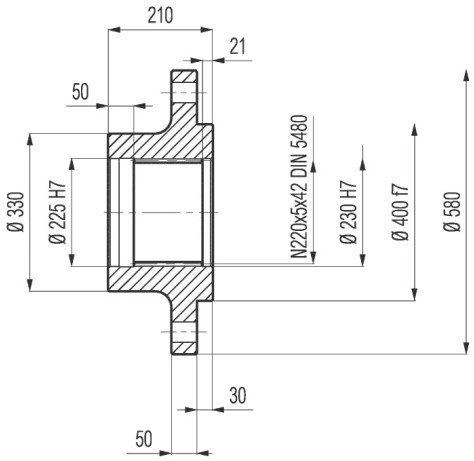

Materiale: Acciaio C40

Manicotti lisci

M0A

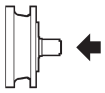

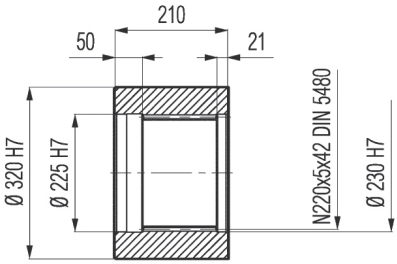

Materiale: Acciaio C40

Giunto ad attrito

G0A

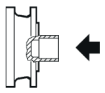

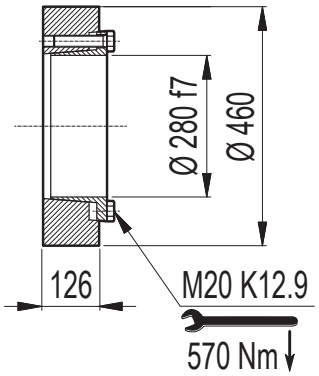

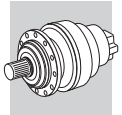

318M L 318M R

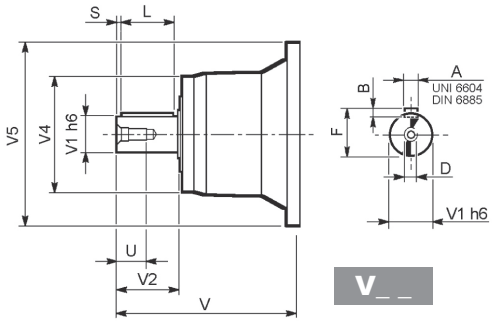

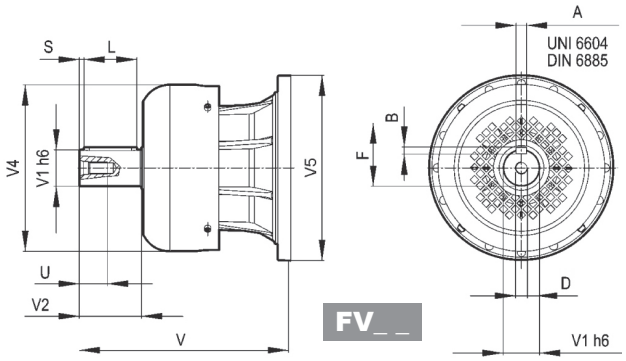

		V	V1	V2	V4	V5	A	B	F	L	S	D	U
318M L2	**V15B**	556	120	210	230	542	32	18	127	180	15	M24	50
318M L3	**V11B**	348	80	130	200	428	22	14	85	110	10	M16	36
	FV11B	456	80	130	347.5	428	22	14	85	110	10	M16	36
318M L4	**V07B**	315	80	130	200	345	22	14	85	110	10	M16	36
	FV07B	375	80	130	347.5	348	22	14	85	110	10	M16	36
	V07A	313	60	105	155	345	18	11	64	90	7.5	M16	36
	FV07A	363	60	105	309	348	18	11	64	90	7.5	M16	36
318M R4 (B) (C)	**V06B**	307	60	105	155	292	18	11	64	90	7.5	M16	36
	FV06B	357	60	105	309	292	18	11	64	90	7.5	M16	36

318M L 318M R

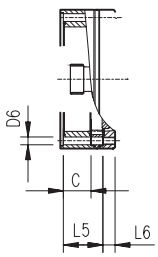

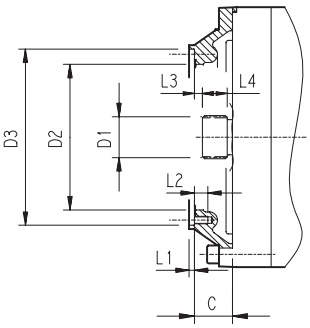

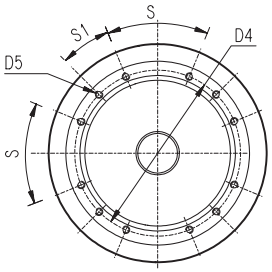

		C	D1	D2	D3	D4	D5	D6	L1	L2	L3	L4	L5	L6	S	S1	Input
318M L1	Consultare il Servizio Tecnico Bonfiglioli																
318M L2	**V9AE**	116	100x94 DIN 5482	340	412 H7	390	M16 n° 18	—	7	30	8	55	—	—	20°	20°	E
318M L3	**V9AD**	81	80x74 DIN 5482	270	335 H7	314	M16 n° 8	—	5	30	8.5	40	—	—	60°	30°	D
318M L4	**V9AB**	51	58x53 DIN 5482	195	236 H7	222	M16 n° 12	—	4	18	11	22	—	—	45°	22.5°	B
318M R4 (B) (C)	**V9AB**	45	58x53 DIN 5482	195	236 H7	222	M10 n° 10	—	4	18	11	22	—	—	45°	22.5°	B

3/V 18M L4

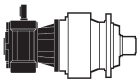

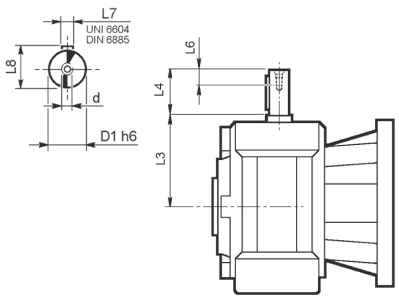

	D1 h6	L3	L4	L6	L7	L8	d
3/V 18M L4_HS	48	230	110	40	14	51.5	M16

318M L 318M R 3/V 18M L4

Carichi radiali ed assiali ammissibili sull'albero lento per un valore di Fh_2 : $n_2 \cdot h = 100000$

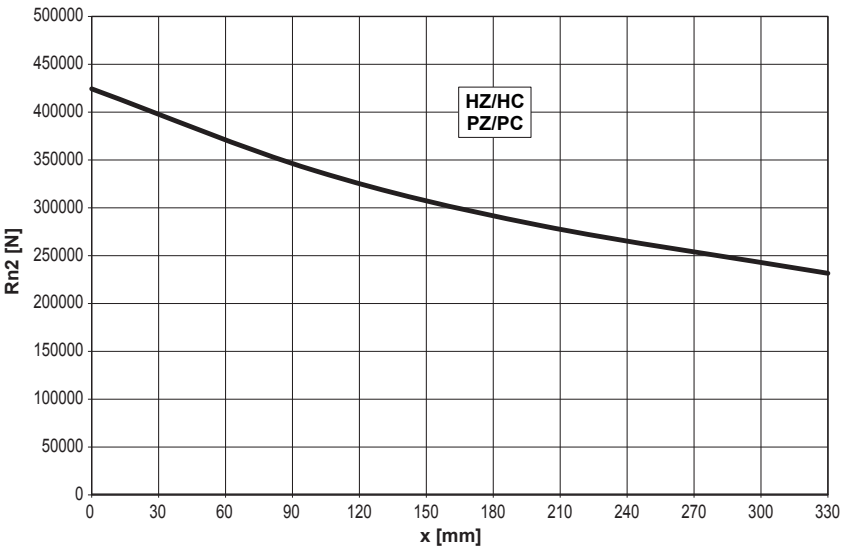

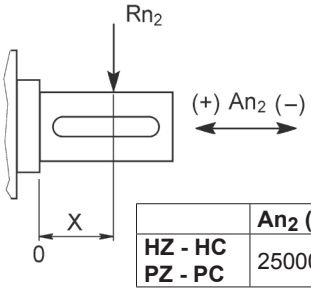

	An_2 (+)	An_2 (-)
HZ - HC PZ - PC	250000	225000

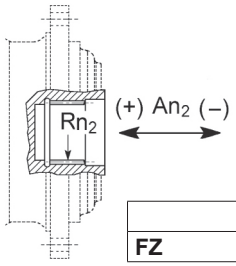

	Rn_2	An_2 (+/-)
FZ	92832	92832

Fattore fh_2 correttivo per carichi sugli alberi	$Fh_2 = n_2 \cdot h$		10000	25000	50000	100000	500000	1000000
	fh_2	FZ	**2.15**	**1.59**	**1.26**	**1.00**	**0.58**	**0.46**
		HC - PC	**1.96**	**1.52**	**1.23**	**1.00**	**0.62**	**0.50**
		HZ - PZ	**1.15**	**1.00**	**1.00**	**1.00**	**0.62**	**0.50**

Carichi radiali ammissibili sull'albero veloce per un valore di Fh_1 : $n_1 \cdot h = 250000$

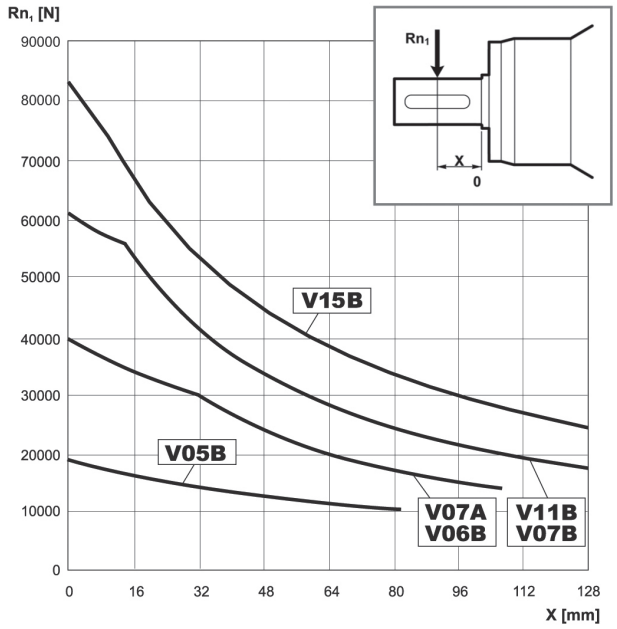

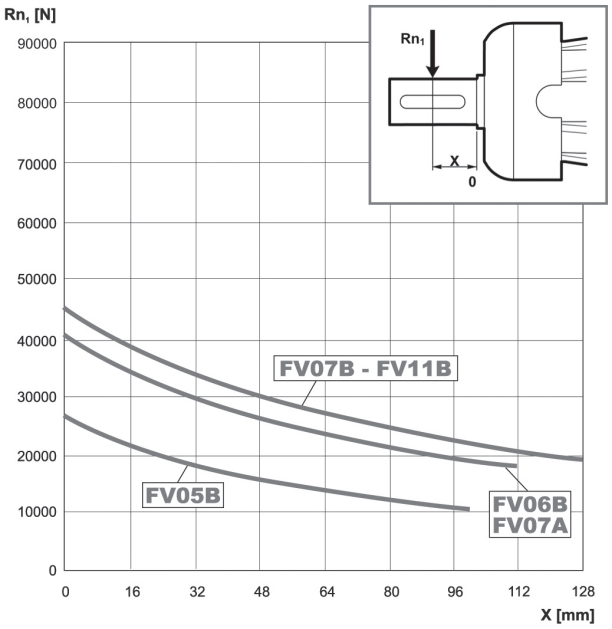

Fattore fh_1 correttivo per carichi sugli alberi	$Fh_1 = n_1 \cdot h$	250000	500000	1000000	2000000	5000000	10000000
	fh_1	**1**	**0.79**	**0.63**	**0.50**	**0.37**	**0.29**

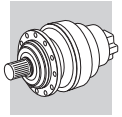

319 L

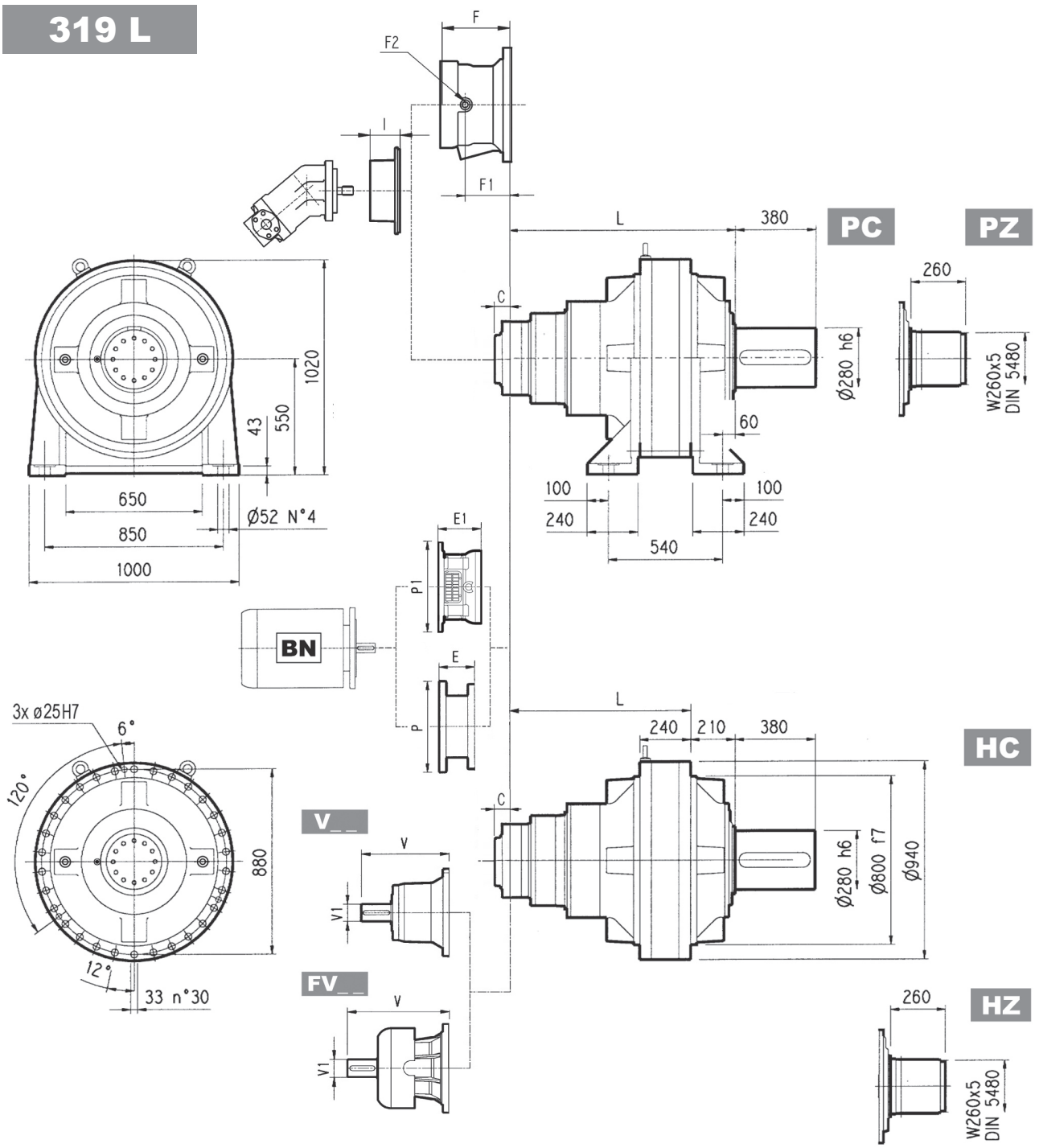

	L				Kg			
	PC - PZ	HC - HZ	FZ - FZP	FP	PC - PZ	HC - HZ	FZ - FZP	FP
319 L1	395	185	185	185	2100	1800	1700	1700
319 L2	778	568	568	568	2350	2050	1950	1950
319 L3	990	780	780	780	2435	2135	2035	2035
319 L4	1123	913	913	913	2480	2180	2080	2080

	V	V1	Kg	V	V1	Kg	V	V1	Kg	V	V1	Kg	C	Input	I	F	F1	F2	Type	Input	Kg
319 L1	—	—	—	—	—	—	—	—	—	—	—	—	245	G		—	—	—	—	—	—
319 L2	556	120	125	—	—	—	—	—	—	—	—	—	116	E		—	—	—	—	—	—
319 L3	348	80	55	—	—	—	456	80	85	—	—	—	81	D	461	232	185	1/4 G	6	B	28
319 L4	315	80	35	313	60	28	375	80	48	363	60	34	51	B		201	153	1/4 G	6	B	28

319 L

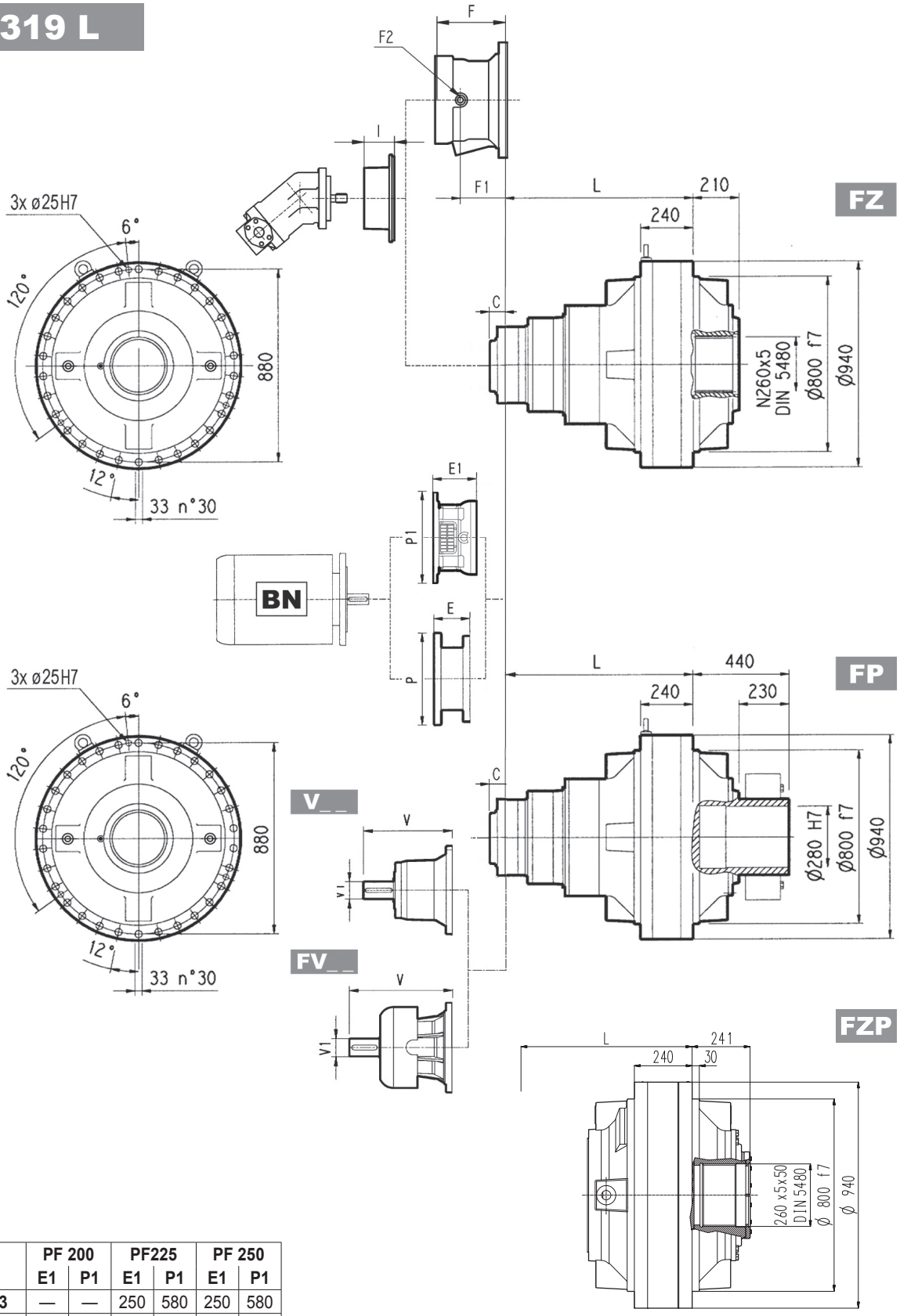

	PF 200		PF225		PF 250	
	E1	P1	E1	P1	E1	P1
319 L3	—	—	250	580	250	580
319 L4	197	530	227	530	227	550

NOTA: Per esecuzione R contattare il Servizio Tecnico Bonfiglioli

FP M_{2max} = 480000 Nm

	P180		P200		P225		P250	
	E	P	E	P	E	P	E	P
319 L3	—	—	267	400	297	450	297	550
319 L4	195	350	186	400	216	450	216	550

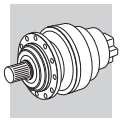

319 R

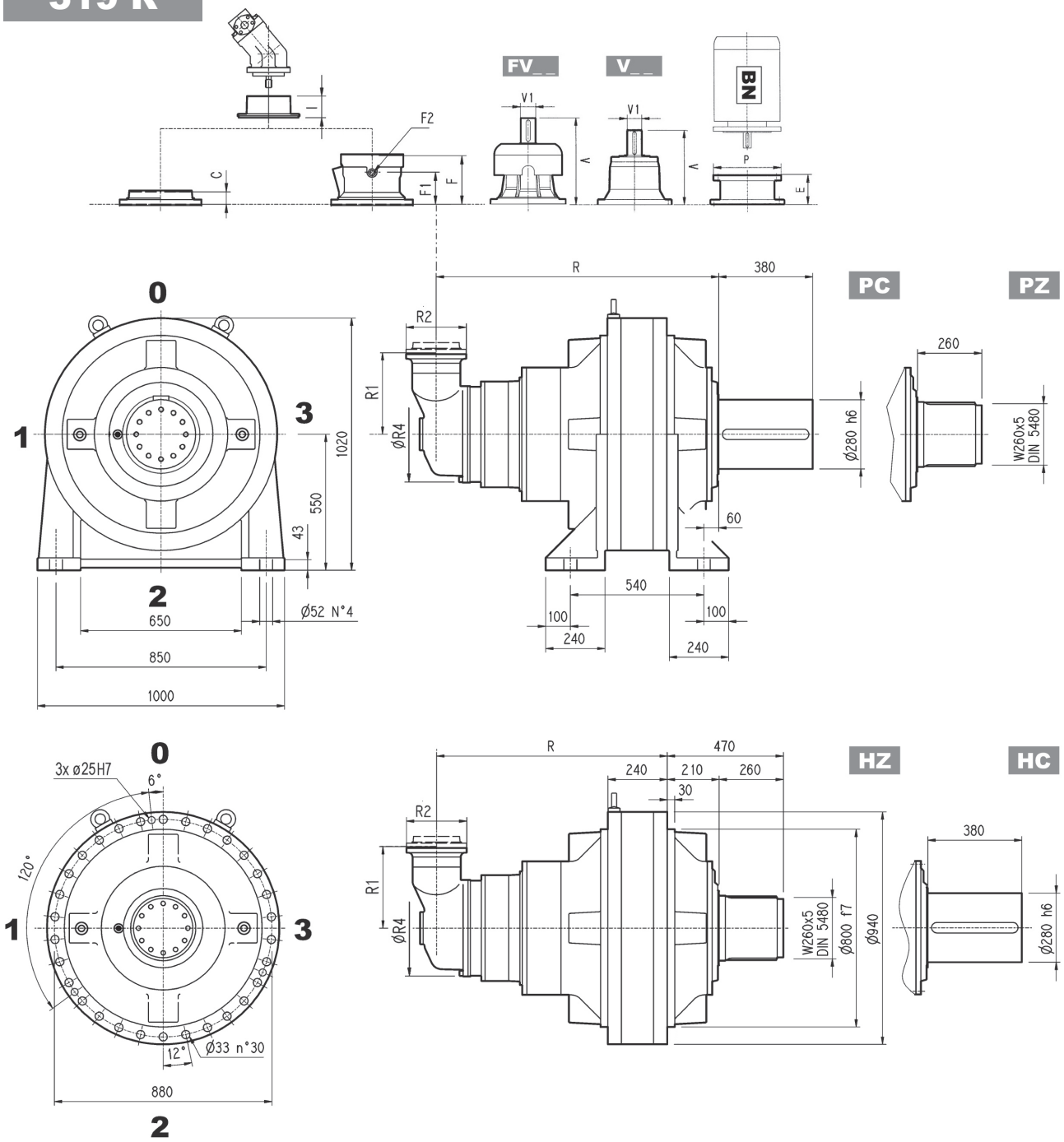

	R				R1	R2	R4	Kg			
	PC-PZ	HC-HZ	FZ - FZP	FP				PC-PZ	HC-HZ	FZ - FZP	FP
319 R4 (B)	1215	1005	1005	1005	345	292	400	2560	2260	2160	2160
319 R4 (C)	1215	1005	1005	1005	390	292	480	2580	2280	2180	2180

	V	V1	Kg	V	V1	Kg	V	V1	Kg	V	V1	Kg	C	Input	I	F	F1	F2	Type	Input	Kg
319 R4 (B)	307	60	23	—	—	—	357	60	28	—	—	—	45	B	461	195	147	1/4 G	6	B	28
319 R4 (C)	307	60	23	—	—	—	357	60	28	—	—	—	45	B		195	147	1/4 G	6	B	28

319 R

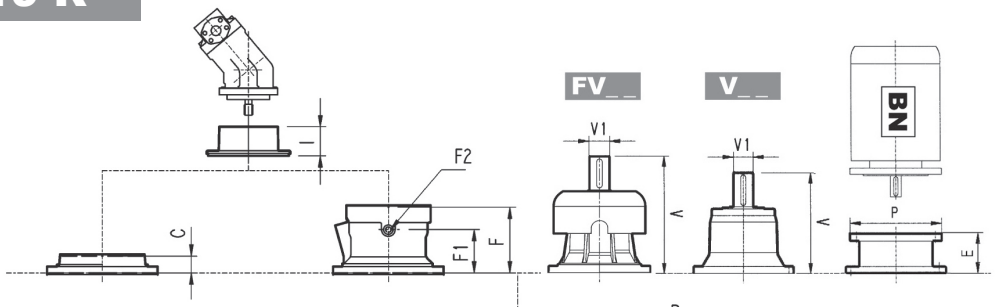

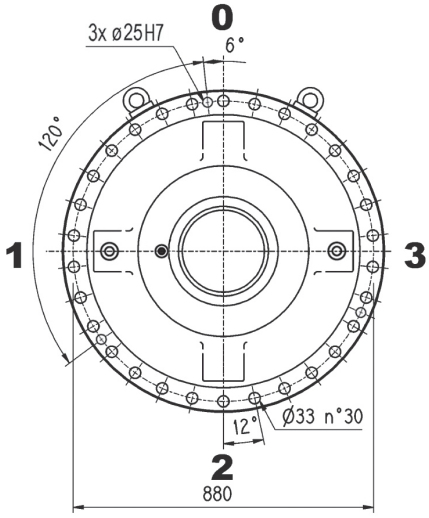

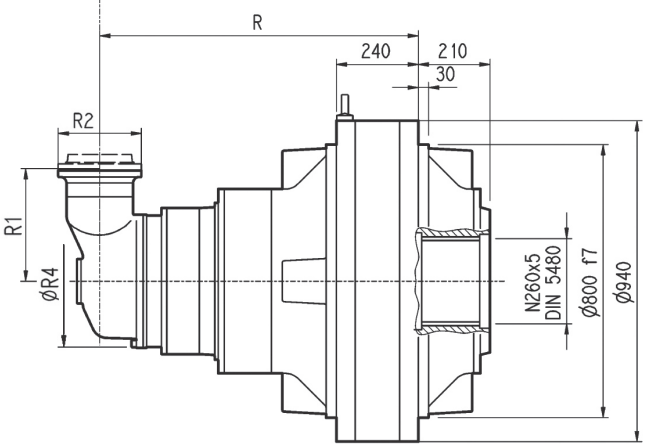

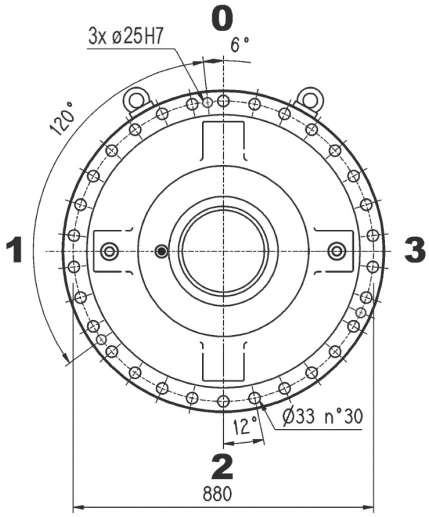

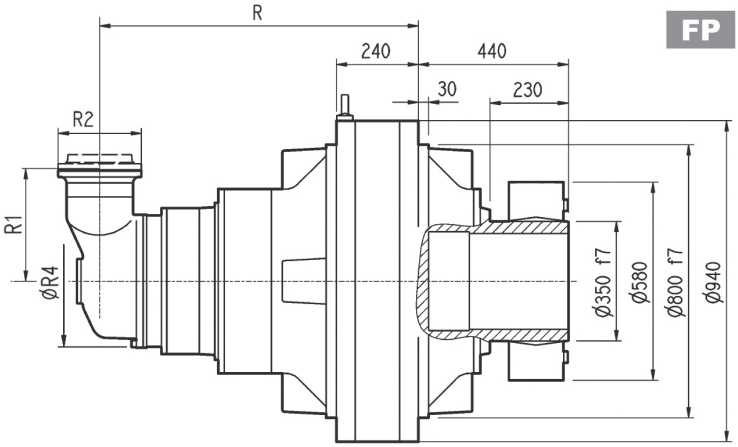

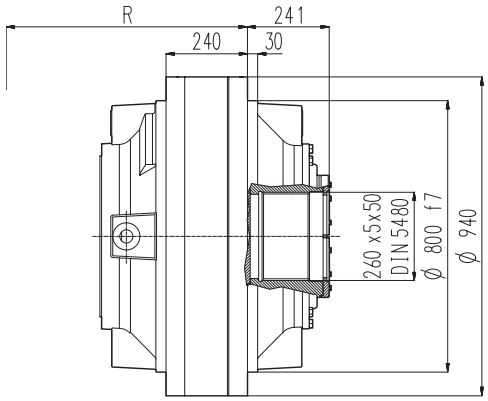

FP	M_{2max} = 480000 Nm

	P132		P160		P180		P200		P225		P250	
	E	P	E	P	E	P	E	P	E	P	E	P
319 R4 (B)	—	—	—	—	152	350	182	400	212	450	193	550
319 R4 (C)	—	—	—	—	152	350	182	400	212	450	193	550

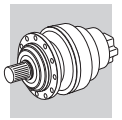

3/V 19 L4

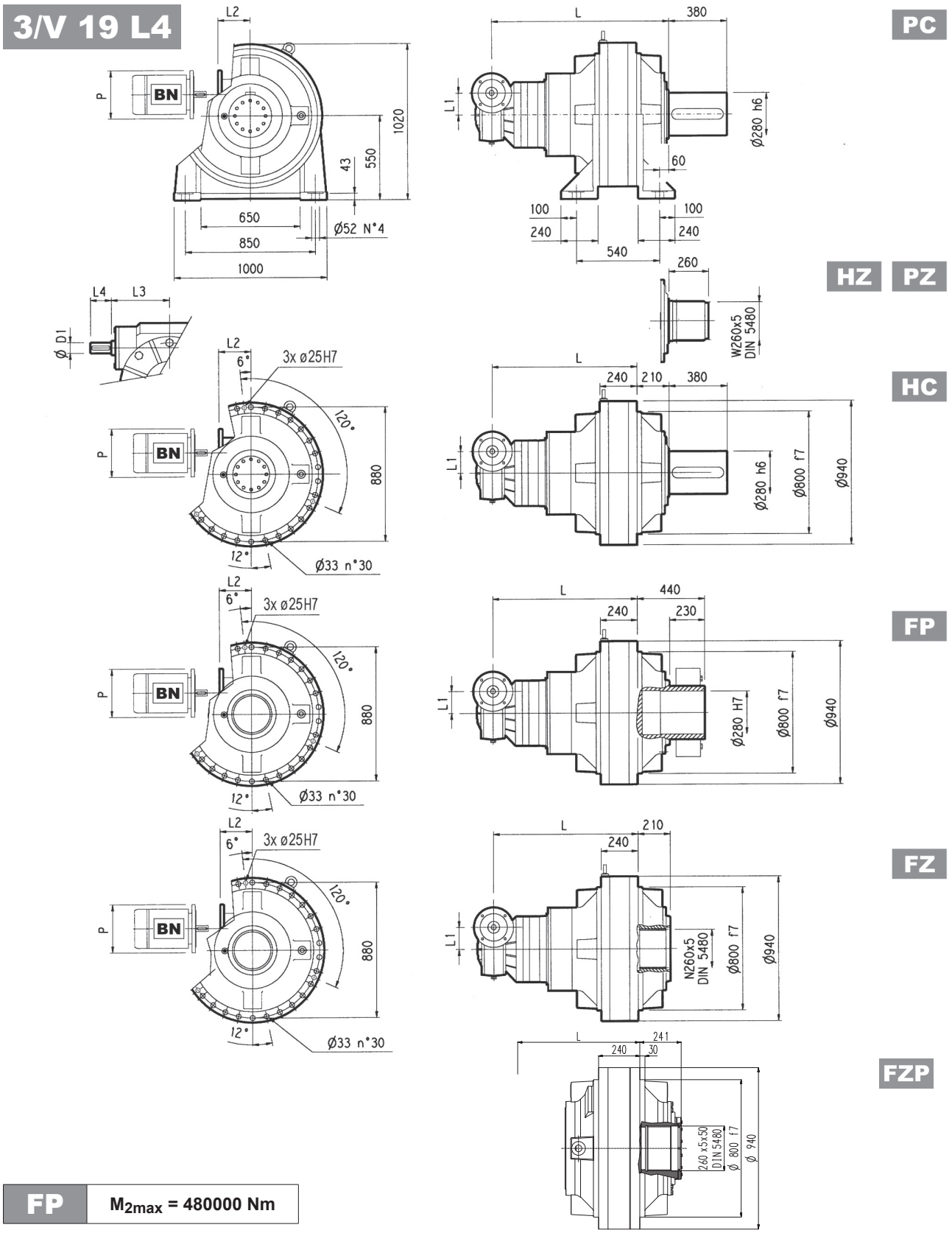

FP	M_{2max} = 480000 Nm

	L				L1	D1	L3	L4	Kg			
	PC - PZ	HC - HZ	FZ - FZP	FP					PC - PZ	HC - HZ	FZ - FZP	FP
3/V 19 L4	1210	1000	1000	1000	210	48	230	110	2650	2350	2250	2250

	P132		P160		P180		P200		P225	
	L2	P	L2	P	L2	P	L2	P	L2	P
3/V 19 L4	485	300	460	350	460	350	485	400	490	450

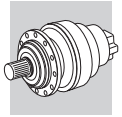

319 L | 319 R | 3/V 19 L4

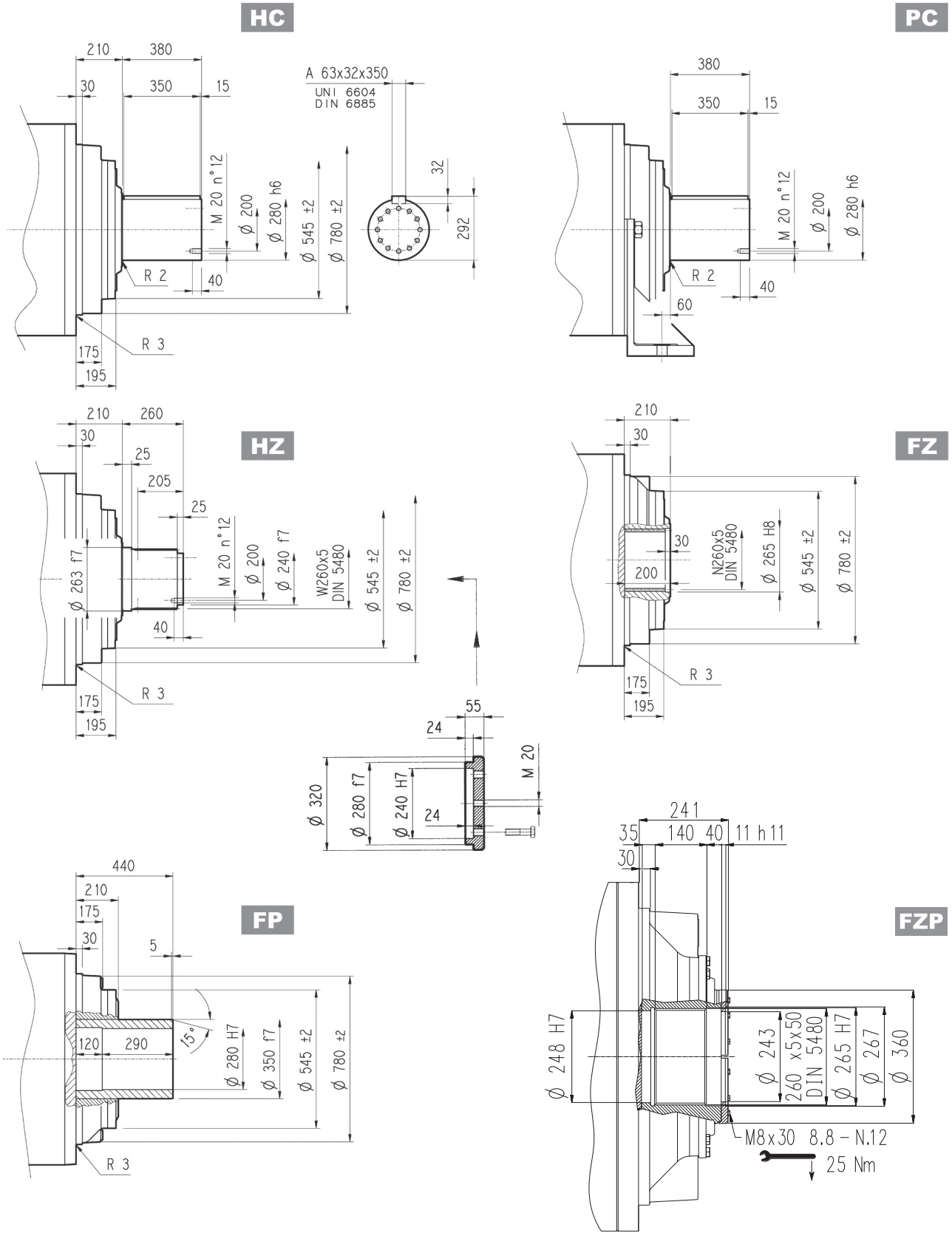

FP	M_{2max} = 480000 Nm

Flangia

W0A

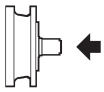

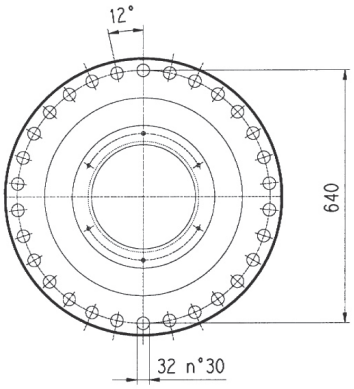

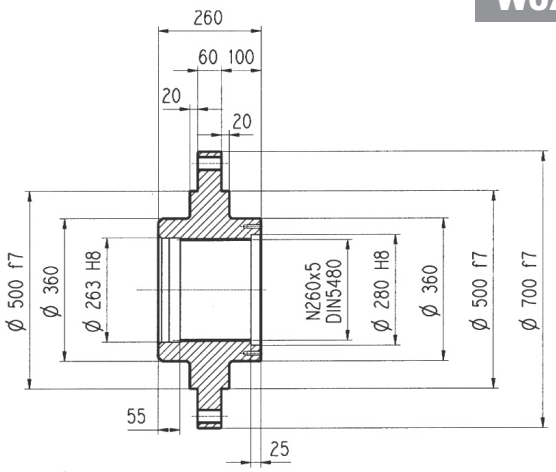

Materiale: Acciaio C40

Manicotti lisci

M0A

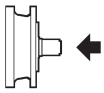

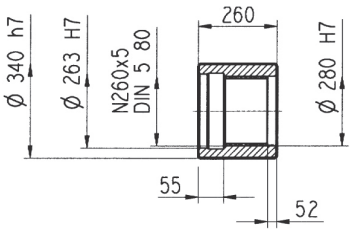

Materiale: Acciaio 16CrNi4

Giunto ad attrito

G0A

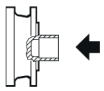

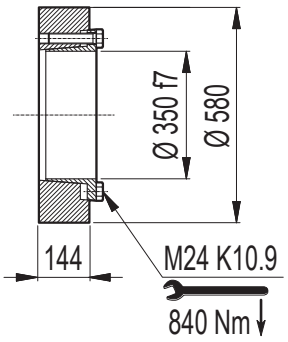

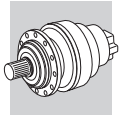

319 L 319 R

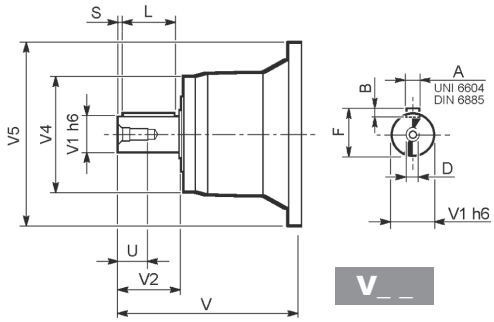

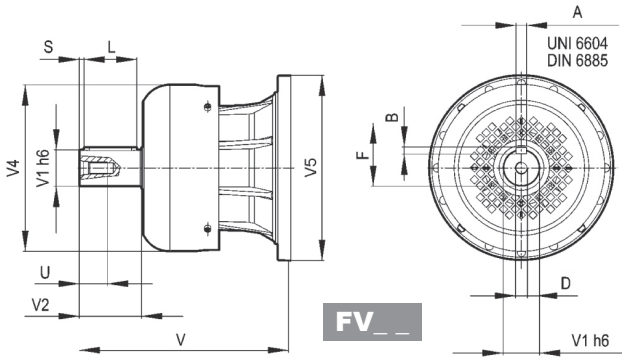

		V	V1	V2	V4	V5	A	B	F	L	S	D	U
319 L2	**V15B**	556	120	210	230	542	32	18	127	180	15	M24	50
319 L3	**V11B**	348	80	130	200	428	22	14	85	110	10	M16	36
	FV11B	456	80	130	347.5	428	22	14	85	110	10	M16	36
319 L4	**V07B**	315	80	130	200	345	22	14	85	110	10	M16	36
	FV07B	375	80	130	347.5	348	22	14	85	110	10	M16	36
	V07A	313	60	105	155	345	18	11	64	90	7.5	M16	36
	FV07A	363	60	105	309	348	18	11	64	90	7.5	M16	36
319 R4 (B) (C)	**V06B**	307	60	105	155	292	18	11	64	90	7.5	M16	36
	FV06B	357	60	105	309	292	18	11	64	90	7.5	M16	36

319 L 319 R

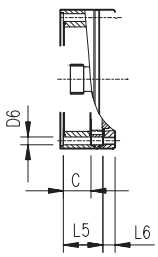

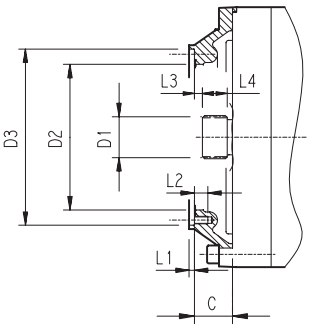

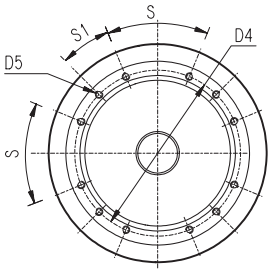

		C	D1	D2	D3	D4	D5	D6	L1	L2	L3	L4	L5	L6	S	S1	Input
319 L1	**V9AG**	245	150x5x28 DIN 5480	444	474 g7	503	M20 n°20	20	5	40	20	82	—	—	30°	15°	G
319 L2	**V9AE**	116	100x94 DIN 5482	340	412 H7	390	M16 n°18	—	7	30	8	55	—	—	20°	20°	E
319 L3	**V9AD**	81	80x74 DIN 5482	270	335 H7	314	M16 n°8	—	5	30	8.5	40	—	—	60°	30°	D
319 L4	**V9AB**	51	58x53 DIN 5482	195	236 H7	222	M10 n°12	—	4	18	11	22	—	—	45°	22.5°	B
319 R4	**V9AA**	37	40x36 DIN 5482	140	178 H7	165	M12 n°8	11	4	18	9	18	—	—	45°	45°	A
319 R4 (B) (C)	**V9AB**	45	58x53 DIN 5482	195	236 H7	222	M10 n°12	—	4	18	11	22	—	—	45°	22.5°	B

3/V 19 L4

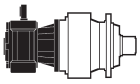

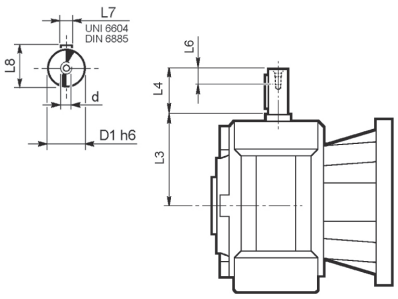

	D1 h6	L3	L4	L6	L7	L8	d
3/V 19 L4_HS	48	230	110	40	14	51.5	M16

Carichi radiali ed assiali ammissibili sull'albero lento per un valore di $Fh_2 : n_2 \cdot h = 100000$

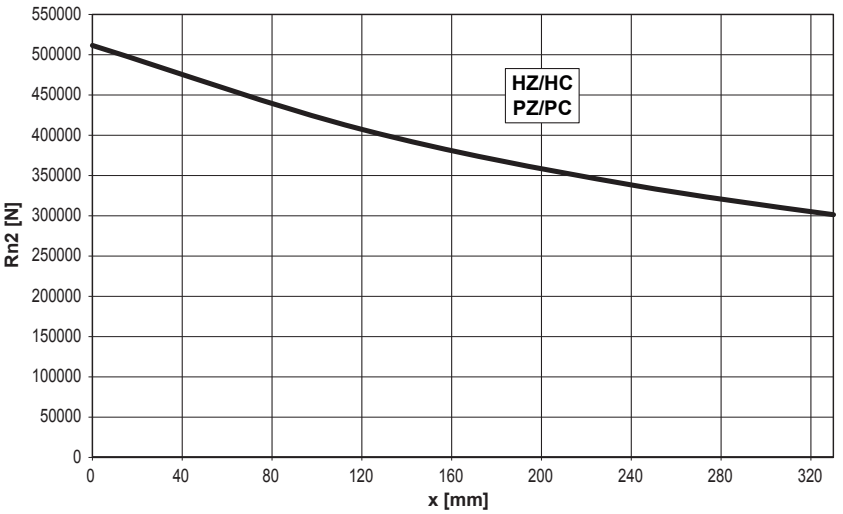

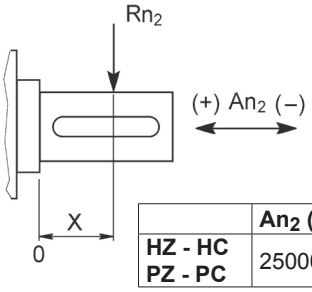

	An_2 (+)	An_2 (-)
HZ - HC PZ - PC	250000	225000

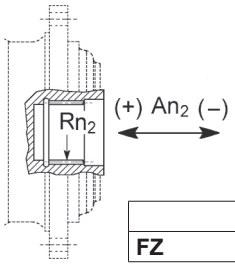

	Rn_2	An_2 (+/-)
FZ	92832	92832

Fattore fh_2 correttivo per carichi sugli alberi	$Fh_2 = n_2 \cdot h$		10000	25000	50000	100000	500000	1000000
	fh_2	FZ	**2.15**	**1.59**	**1.26**	**1.00**	**0.58**	**0.46**
		HZ - HC - PZ - PC	**1.75**	**1.52**	**1.23**	**1.00**	**0.62**	**0.50**

Carichi radiali ammissibili sull'albero veloce per un valore di $Fh_1 : n_1 \cdot h = 250000$

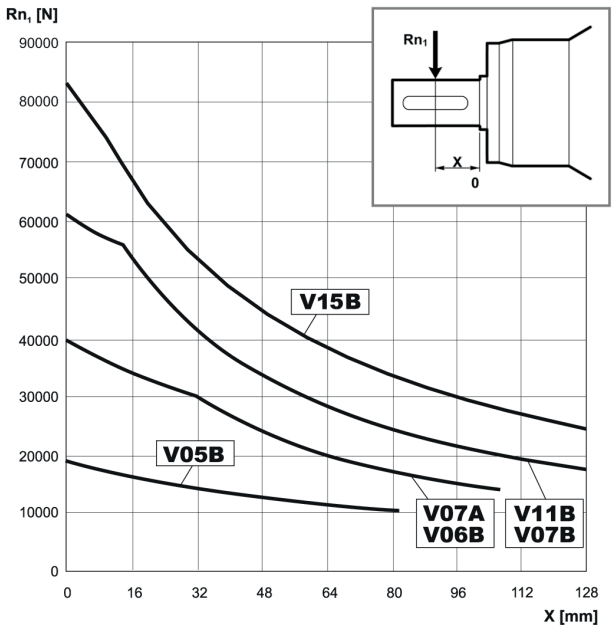

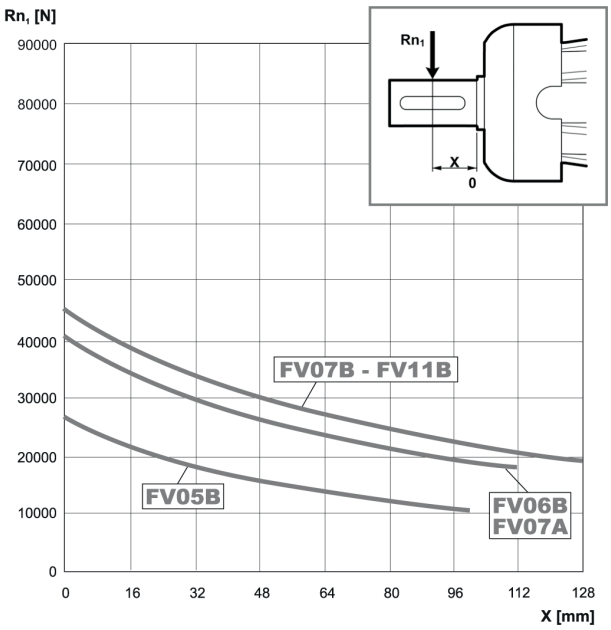

Fattore fh_1 correttivo per carichi sugli alberi	$Fh_1 = n_1 \cdot h$	250000	500000	1000000	2000000	5000000	10000000
	fh_1	**1**	**0.79**	**0.63**	**0.50**	**0.37**	**0.29**

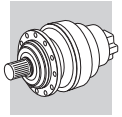

321 L

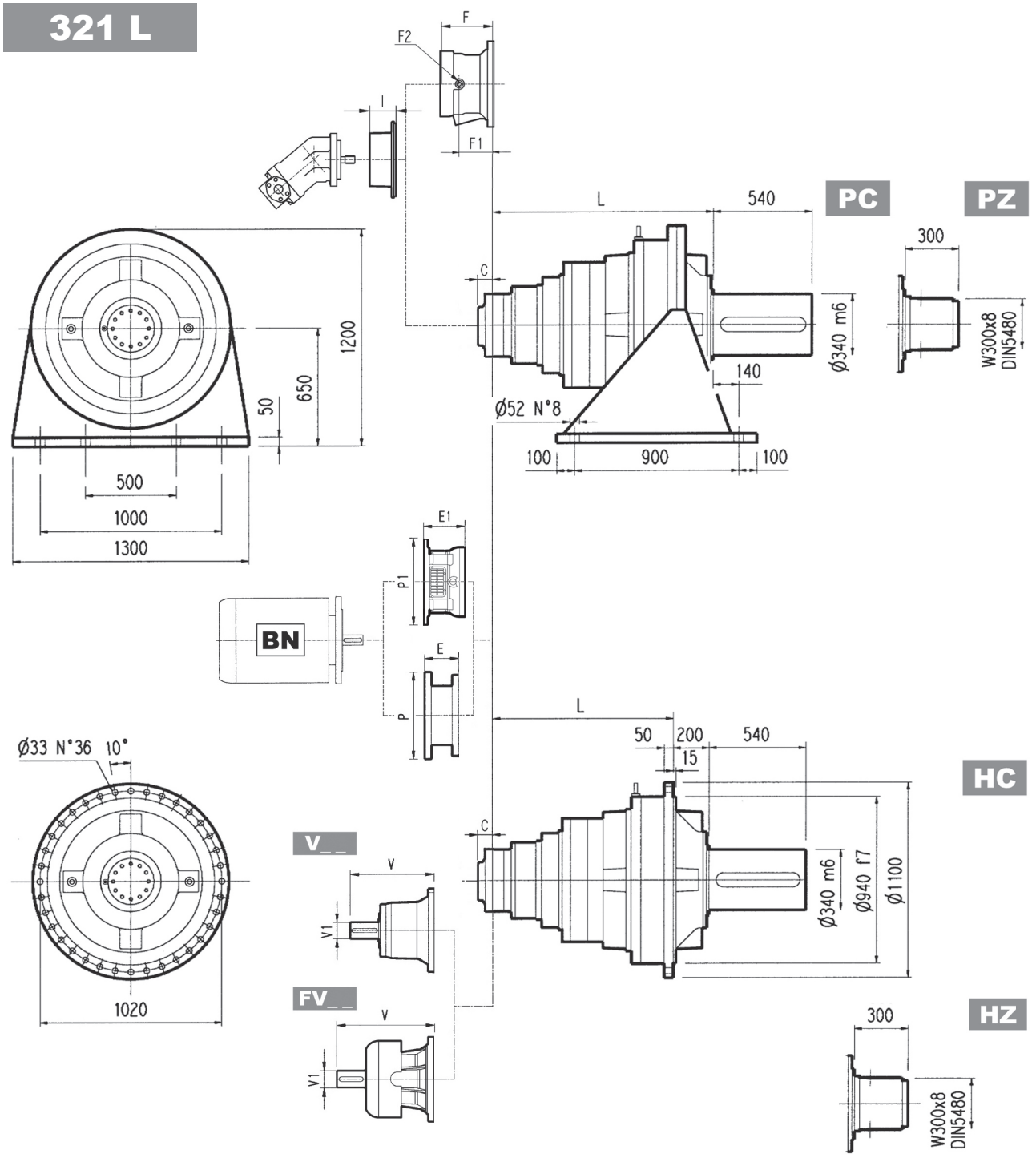

	L				Kg			
	PC - PZ	HC - HZ	FZ - FZP	FP	PC - PZ	HC - HZ	FZ - FZP	FP
321 L2	795	595	595	595	3000	2700	2600	2600
321 L3	1104	904	904	904	3120	2820	2720	2720
321 L4	1253	1053	1053	1053	3180	2880	2780	2780

	V	V1	Kg	V	V1	Kg	V	V1	Kg	V	V1	Kg	C	Input	I	F	F1	F2	Type	Input	Kg
321 L2	—	—	—	—	—	—	—	—	—	—	—	—	181	F		—	—	—	—	—	—
321 L3	343	80	55	—	—	—	451	80	71	—	—	—	75	D		—	—	—	—	—	—
321 L4	315	80	35	313	60	28	375	80	48	363	60	34	51	B	461	201	153	1/4 G	6	B	28

321 L

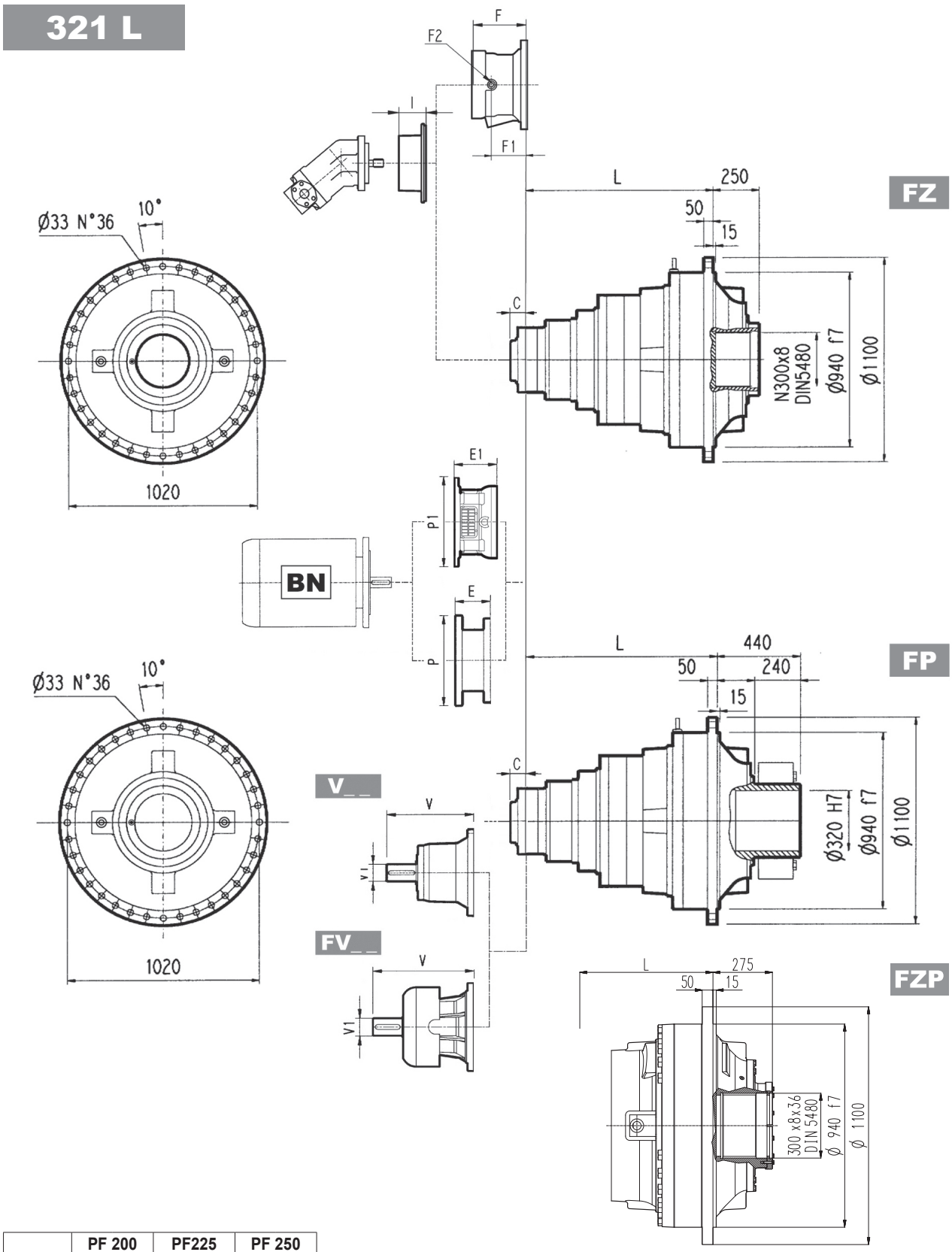

	PF 200		PF225		PF 250	
	E1	P1	E1	P1	E1	P1
321 L4	197	530	227	530	227	550

NOTA: Per esecuzione R contattare il Servizio Tecnico Bonfiglioli

FP	M_{2max} = 720000 Nm

	P180		P200		P225		P250	
	E	P	E	P	E	P	E	P
321 L4	195	350	186	400	216	450	216	550

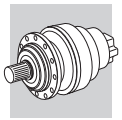

321 R

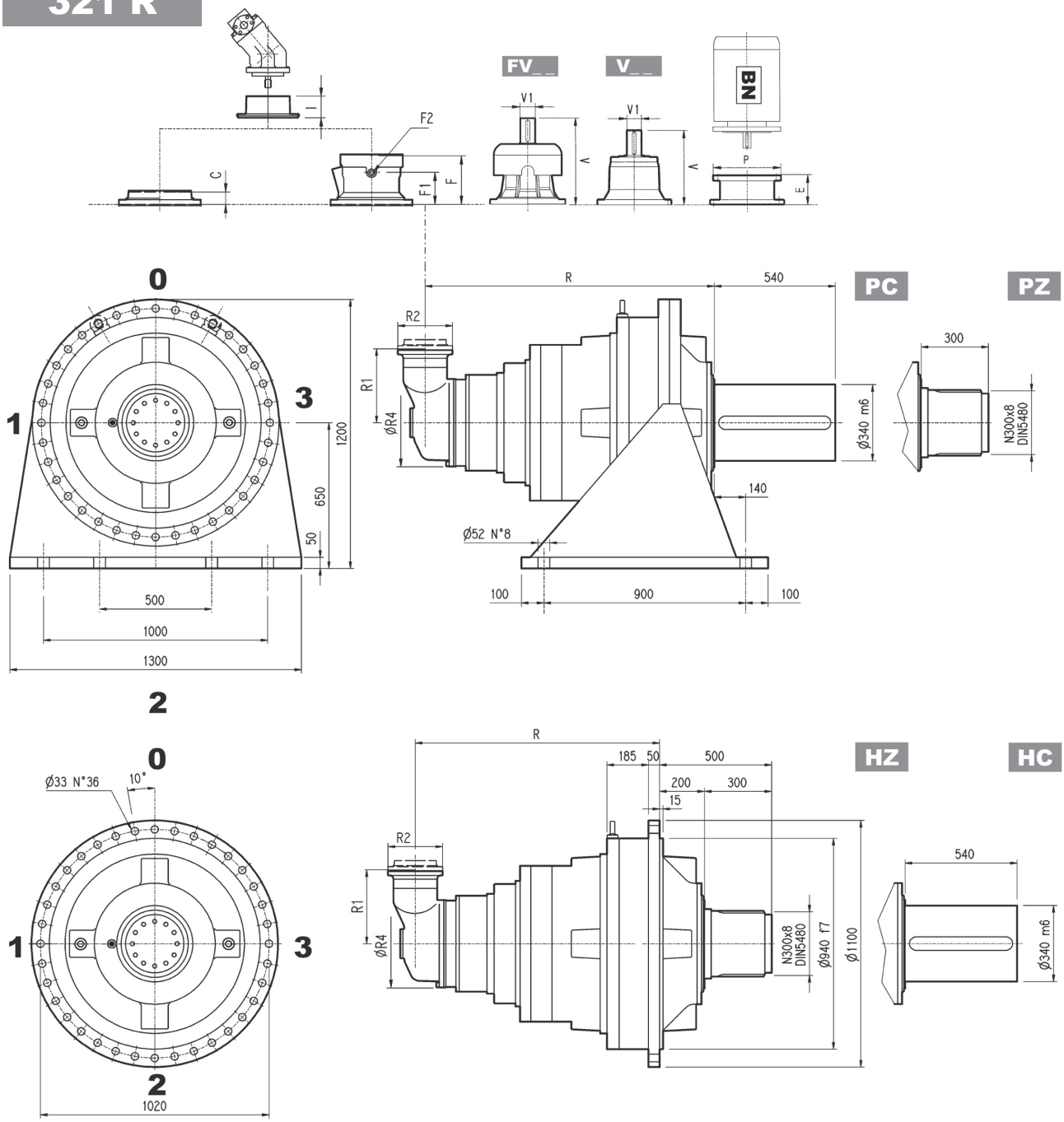

	R				R1	R2	R4	Kg			
	PC-PZ	HC-HZ	FZ - FZP	FP				PC-PZ	HC-HZ	FZ - FZP	FP
321 R4 (B)	1334	1134	1134	1134	345	292	400	3250	2950	2850	2850
321 R4 (C)	1334	1134	1134	1134	390	292	480	3260	2960	2860	2860

	V	V1	Kg	V	V1	Kg	V	V1	Kg	V	V1	Kg	C	Input	I	F	F1	F2	Type	Input	Kg
321 R4 (B)	307	60	23	—	—	—	357	60	28	—	—	—	45	B	461	195	147	1/4 G	6	B	28
321 R4 (C)	307	60	23	—	—	—	357	60	28	—	—	—	45	B		195	147	1/4 G	6	B	28

321 R

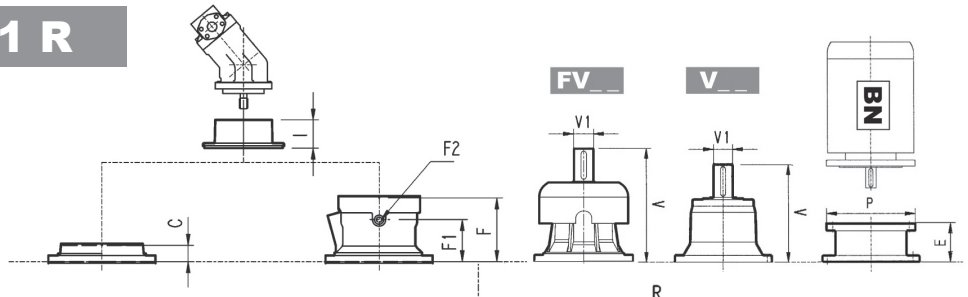

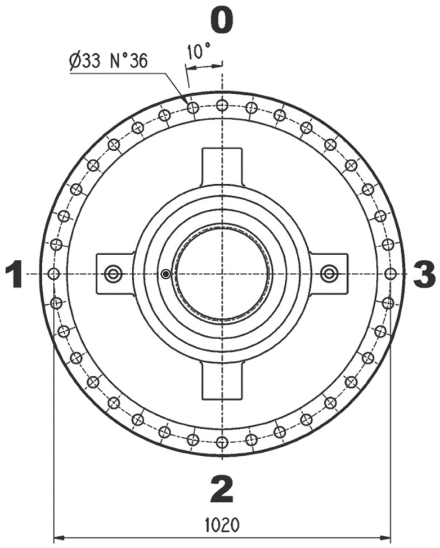

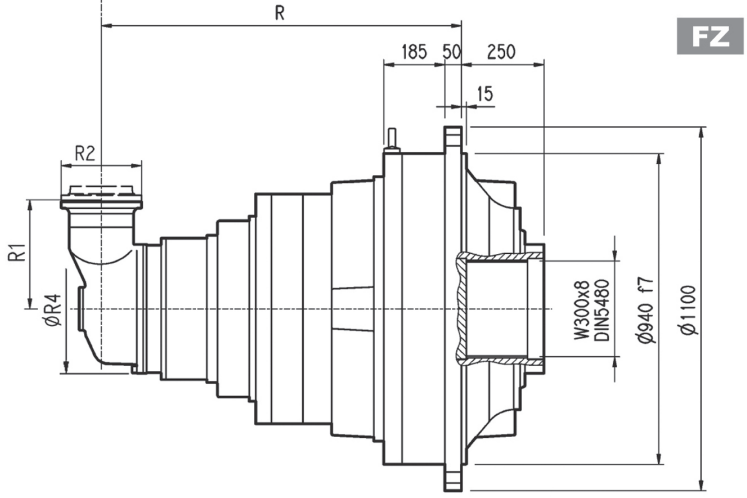

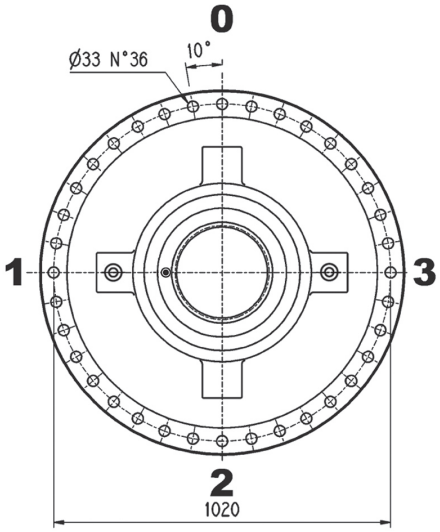

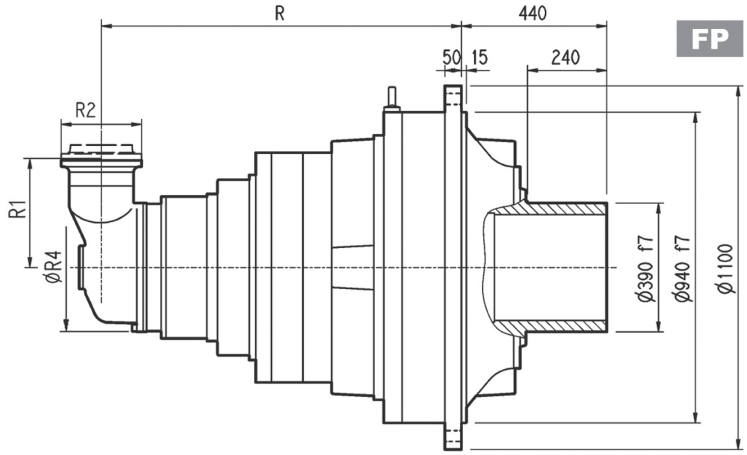

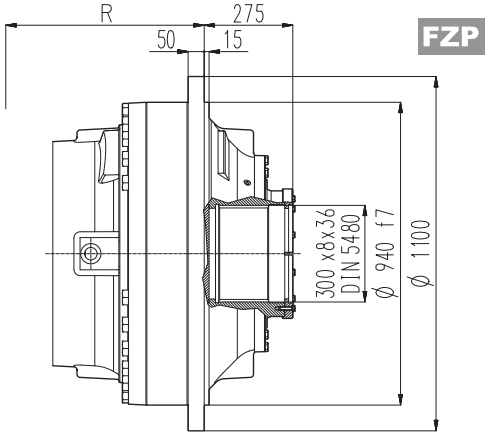

FP	M_{2max} = 720000 Nm

	P132		P160		P180		P200		P225		P250	
	E	P	E	P	E	P	E	P	E	P	E	P
321 R4 (B)	—	—	—	—	152	350	182	400	212	450	193	550
321 R4 (C)	—	—	—	—	152	350	182	400	212	450	193	550

3/V 21 L4

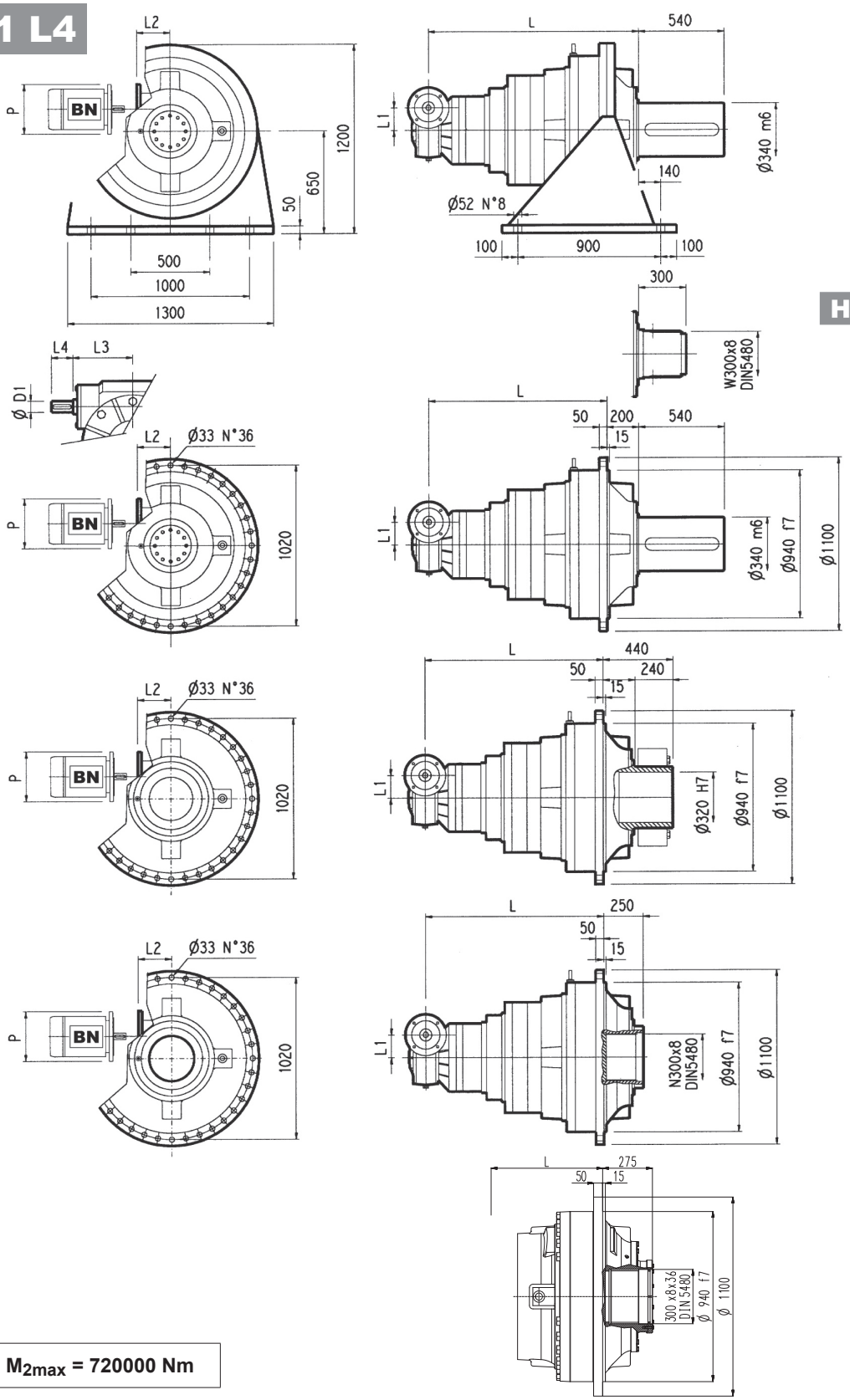

FP	M_{2max} = 720000 Nm

	L				L1	L2	D1	L3	L4	Kg			
	PC - PZ	HC - HZ	FZ - FZP	FP						PC - PZ	HC - HZ	FZ - FZP	FP
3/V 21 L4	1374	1174	1174	1174	250	—	55	276	110	3430	3130	3030	3030

	P132		P160		P180		P200		P225	
	L2	P	L2	P	L2	P	L2	P	L2	P
3/V 21 L4	531	300	506	350	506	350	531	400	536	450

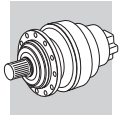

321 L | 321 R | 3/V 21 L4

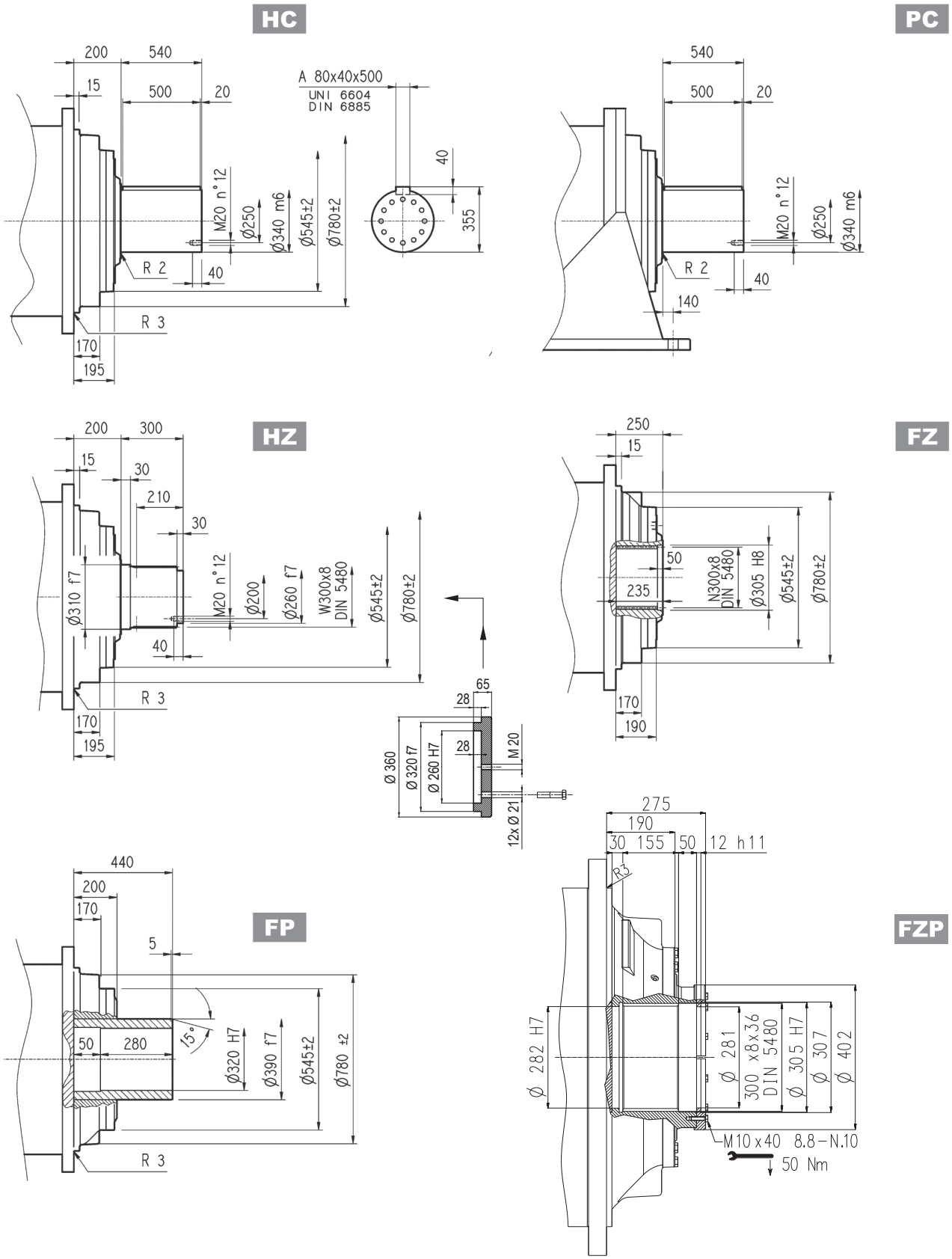

FP	M_{2max} = 720000 Nm

Flangia

W0A

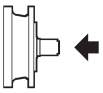

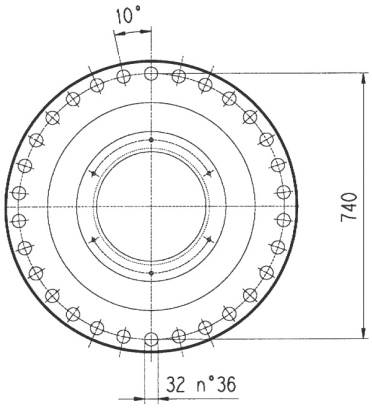

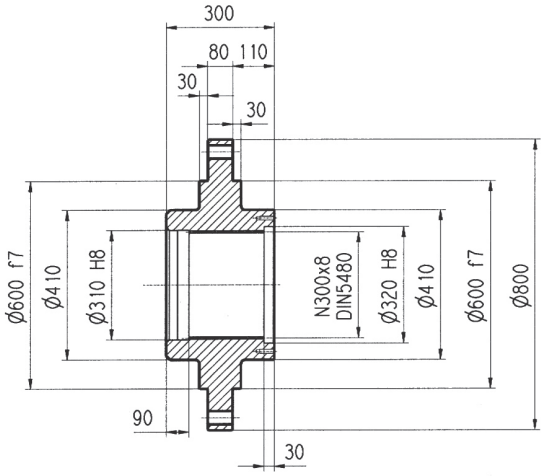

Materiale: Acciaio C40

Giunto ad attrito

G0A

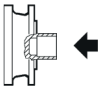

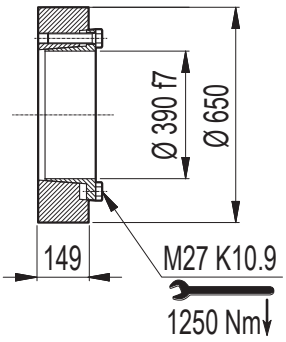

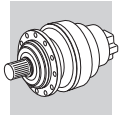

321 L 321 R

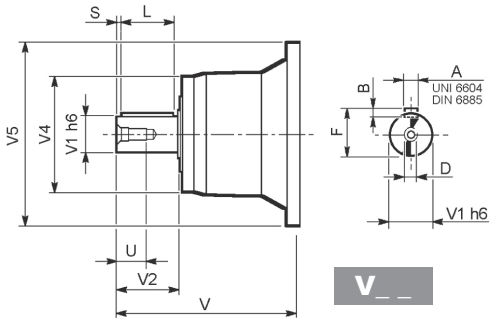

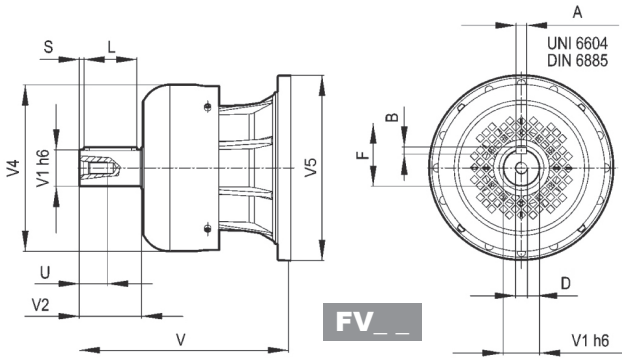

		V	V1	V2	V4	V5	A	B	F	L	S	D	U
321 L3	V11B	343	80	130	200	445	22	14	85	110	10	M16	36
	FV11B	451	80	130	347.5	445	22	14	85	110	10	M16	36
321 L4	V07B	315	80	130	200	345	22	14	85	110	10	M16	36
	FV07B	375	80	130	347.5	348	22	14	85	110	10	M16	36
	V07A	313	60	105	155	345	18	11	64	90	7.5	M16	36
	FV07A	363	60	105	309	348	18	11	64	90	7.5	M16	36
321 R4 (B) (C)	V06B	307	60	105	155	292	18	11	64	90	7.5	M16	36
	FV06B	357	60	105	309	292	18	11	64	90	7.5	M16	36

321 L 321 R

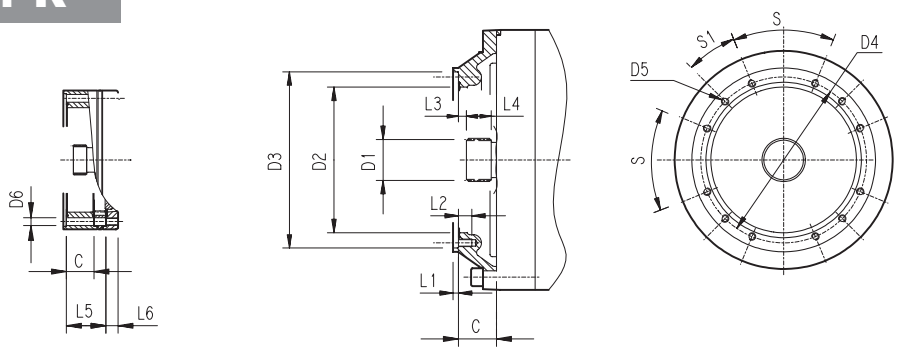

		C	D1	D2	D3	D4	D5	D6	L1	L2	L3	L4	L5	L6	S	S1	Input
321 L1	Consultare il Servizio Tecnico Bonfiglioli																
321 L2	V9AF	181	120x3 DIN 5480	365	390 f7	415	M16 n°18	—	4	30	3	65	—	—	20°	20°	F
321 L3	V9AD	75	80x74 DIN 5482	270	335 H7	314	M16 n°8	—	5	30	9.5	40	—	—	60°	30°	D
321 L4	V9AB	51	58x53 DIN 5482	195	236 H7	222	M10 n°12	—	4	18	11	22	—	—	45°	22.5°	B
321 R4 (B) (C)	V9AB	45	58x53 DIN 5482	195	236 H7	222	M10 n°12	—	4	18	11	22	—	—	45°	22.5°	B

3/V 21 L4

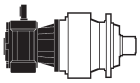

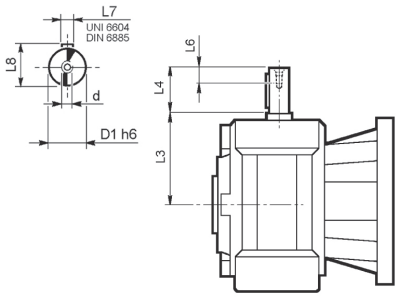

	D1 h6	L3	L4	L6	L7	L8	d
3/V 21 L4_HS	55	276	110	40	16	59	M16

Carichi radiali ed assiali ammissibili sull'albero lento per un valore di $Fh_2 : n_2 \cdot h = 100000$

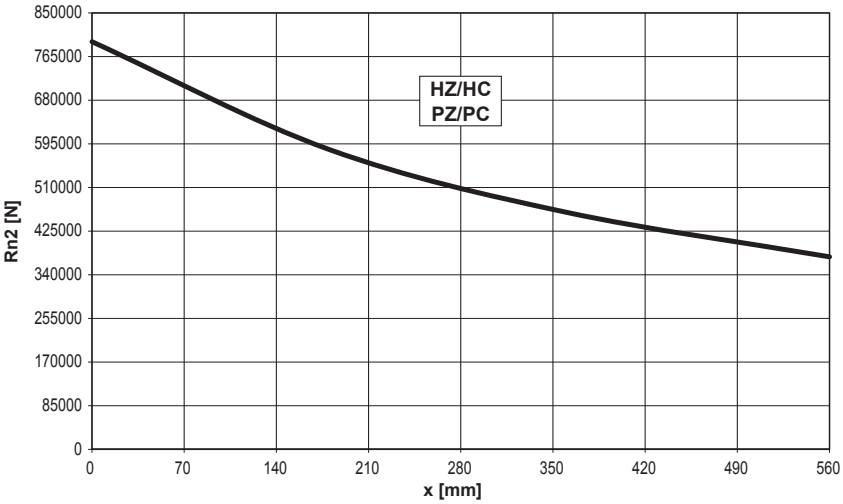

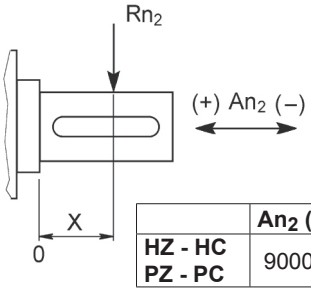

	An_2 (+)	An_2 (-)
HZ - HC PZ - PC	90000	120000

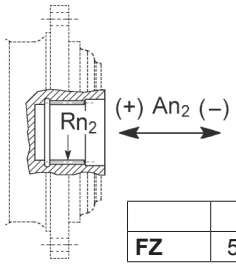

	Rn_2	An_2 (+/-)
FZ	556991	83549

Fattore fh_2 correttivo per carichi sugli alberi	$Fh_2 = n_2 \cdot h$		10000	25000	50000	100000	500000	1000000
	fh_2	FZ	**2.15**	**1.59**	**1.26**	**1.00**	**0.58**	**0.46**
		HZ - HC - PZ - PC	**1.54**	**1.35**	**1.23**	**1.00**	**0.62**	**0.50**

Carichi radiali ammissibili sull'albero veloce per un valore di $Fh_1 : n_1 \cdot h = 250000$

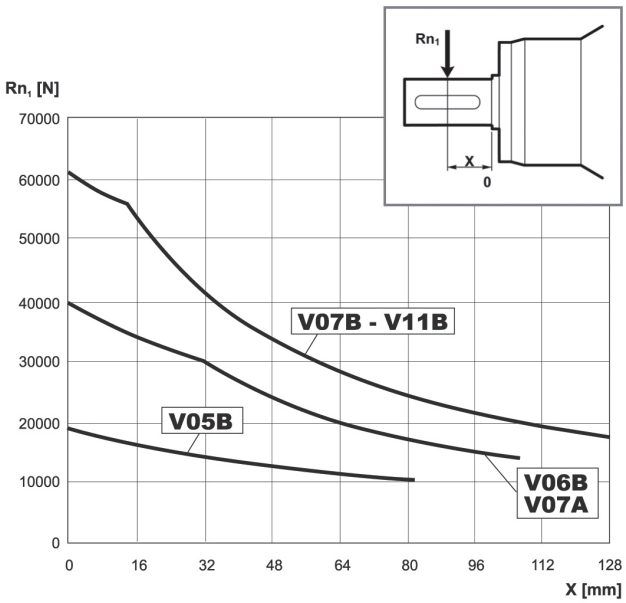

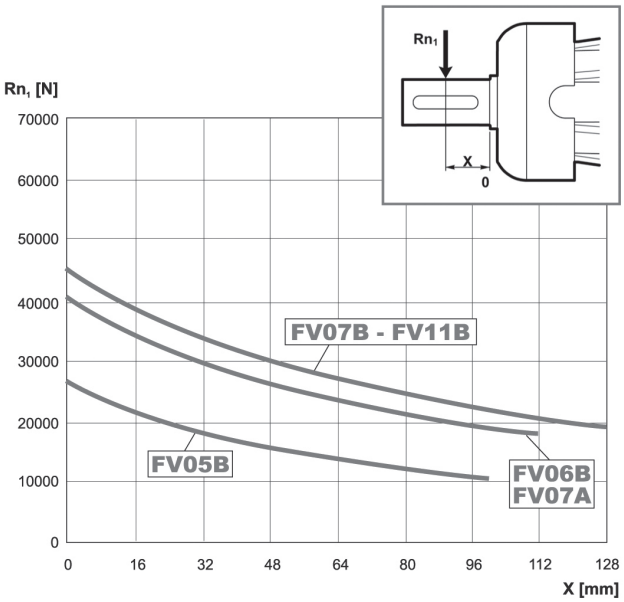

Fattore fh_1 correttivo per carichi sugli alberi	$Fh_1 = n_1 \cdot h$	250000	500000	1000000	2000000	5000000	10000000
	fh_1	**1**	**0.79**	**0.63**	**0.50**	**0.37**	**0.29**

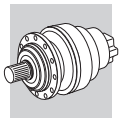

323 L

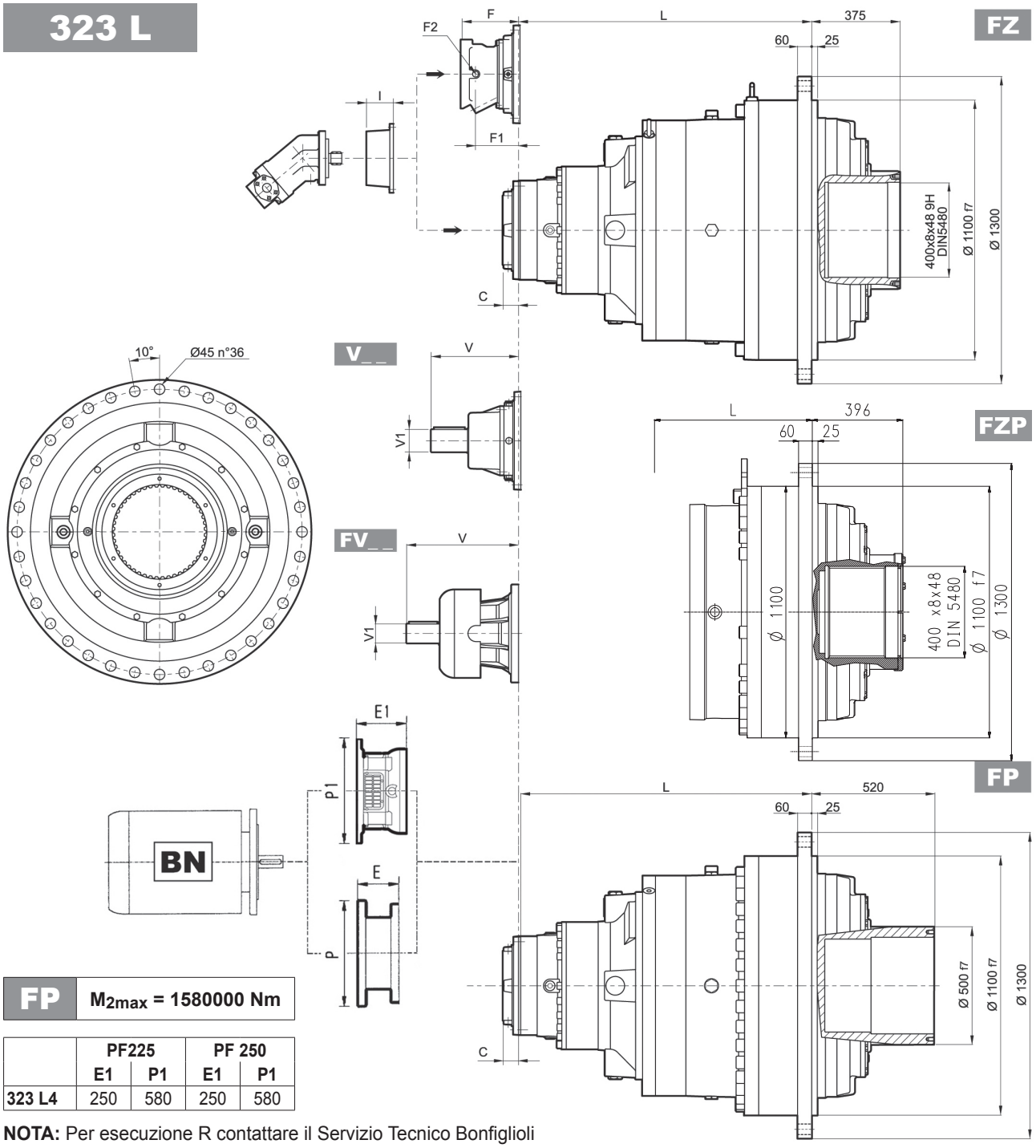

FP	M_{2max} = 1580000 Nm

	PF225		PF 250	
	E1	P1	E1	P1
323 L4	250	580	250	580

NOTA: Per esecuzione R contattare il Servizio Tecnico Bonfiglioli

	L		Kg							
	FZ - FZP	FP	FZ - FZP	FP	V	V1	Kg	V	V1	Kg
323 L1	Consultare il Servizio Tecnico Bonfiglioli									
323 L2	666	666	4450	4550	—	—	—	—	—	—
323 L3	1049	1049	4750	4850	556	120	125	—	—	—
323 L4	1261	1261	4900	5000	315	80	35	456	80	85

										P200		P225		P250	
	C	Input	I	F	F1	F2	Type	Input	Kg	E	P	E	P	E	P
323 L1	—	—		—	—	—	—	—	—	—	—	—	—	—	—
323 L2	245	G		—	—	—	—	—	—	—	—	—	—	—	—
323 L3	116	E		—	—	—	—	—	—	—	—	—	—	—	—
323 L4	81	D	457	201	48	1/4 G	6	B	22	267	400	297	450	297	550

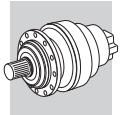

323 L

FZ

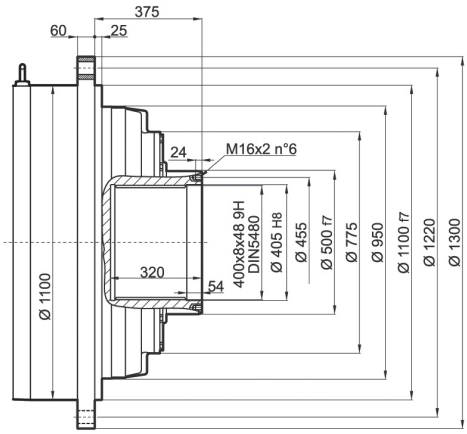

FP

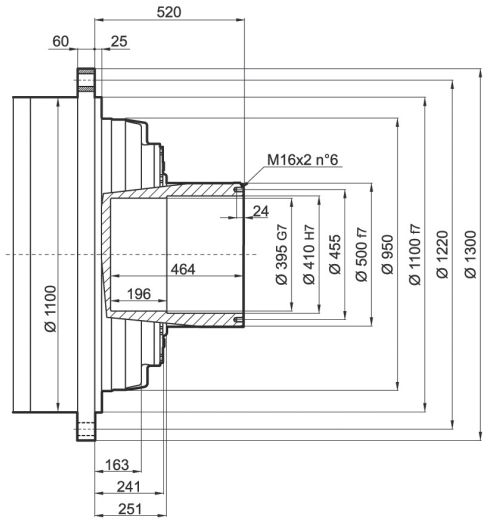

FZP

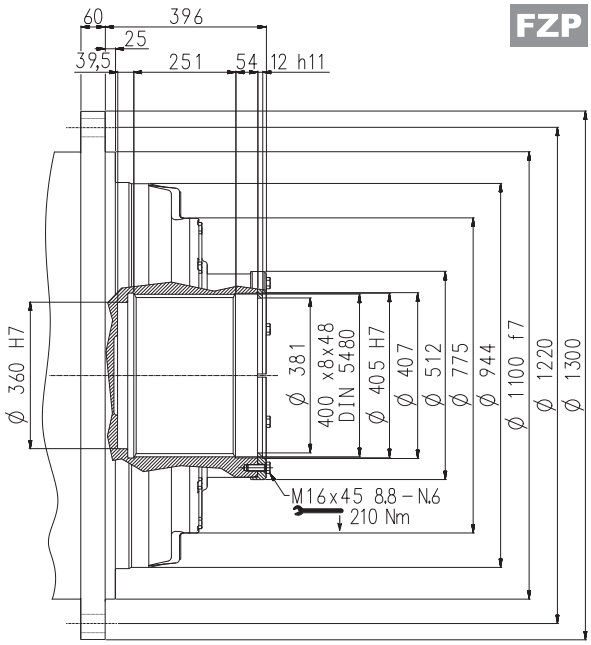

Giunto ad attrito

G0A

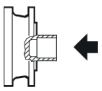

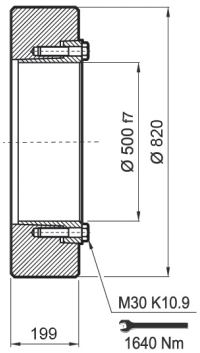

FP	M_{2max} = 1580000 Nm

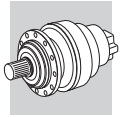

323 L

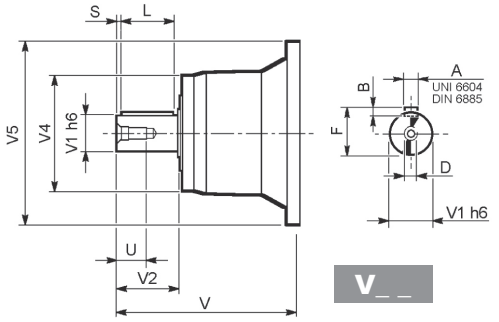

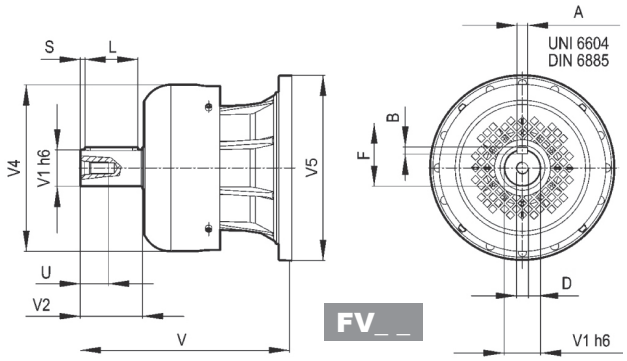

		V	V1	V2	V4	V5	A	B	F	L	S	D	U
323 L3	**V15B**	556	120	210	230	542	32	18	127	180	15	M24	50
323 L4	**V11B**	348	80	130	200	428	22	14	85	110	10	M16	36
	FV11B	456	80	130	347.5	428	22	14	85	110	10	M16	36

323 L

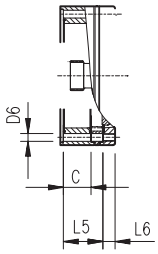

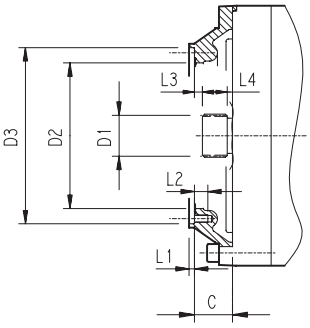

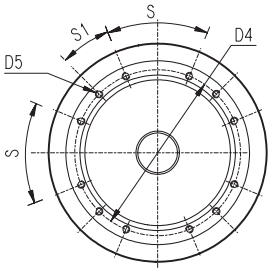

		C	D1	D2	D3	D4	D5	D6	L1	L2	L3	L4	L5	L6	S	S1	Input
323 L1	Consultare il Servizio Tecnico Bonfiglioli																
323 L2	**V9AG**	245	150x5x28 DIN 5480	444	474 g7	503	M20 n°20	20	5	40	20	82	—	—	30°	15°	G
323 L3	**V9AE**	116	100x94 DIN 5482	340	412 H7	390	M16 n°18	—	7	30	8	55	—	—	20°	20°	E
323 L4	**V9AD**	81	80x74 DIN 5482	270	335 H7	314	M16 n°8	—	5	30	8.5	40	—	—	60°	30°	D

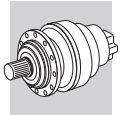

323 L

Carichi radiali ed assiali ammissibili sull'albero lento per un valore di $Fh_2 : n_2 \cdot h = 100000$

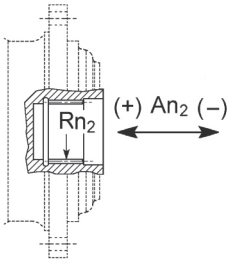

	Rn_2	An_2 (+)	An_2 (-)
FZ	510575	174060	69624

Fattore fh_2 correttivo per carichi sugli alberi	$Fh_2 = n_2 \cdot h$		10000	25000	50000	100000	500000	1000000
	fh_2	**FZ**	**2.15**	**1.59**	**1.26**	**1.00**	**0.58**	**0.46**

Carichi radiali ammissibili sull'albero veloce per un valore di $Fh_1 : n_1 \cdot h = 250000$

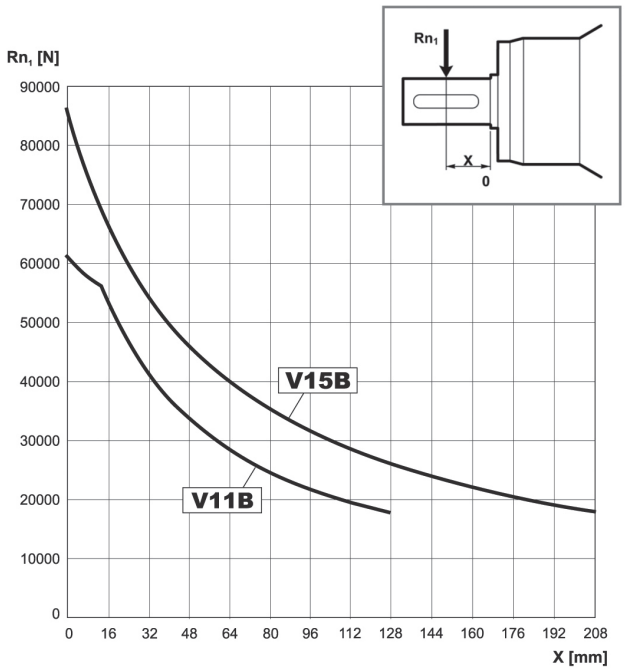

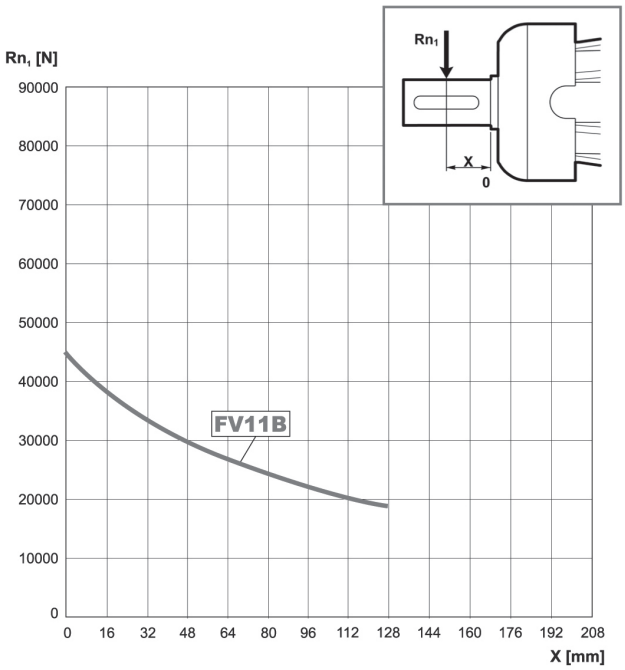

Fattore fh_1 correttivo per carichi sugli alberi	$Fh_1 = n_1 \cdot h$	250000	500000	1000000	2000000	5000000	10000000
	fh_1	**1**	**0.79**	**0.63**	**0.50**	**0.37**	**0.29**

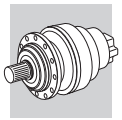

325 L

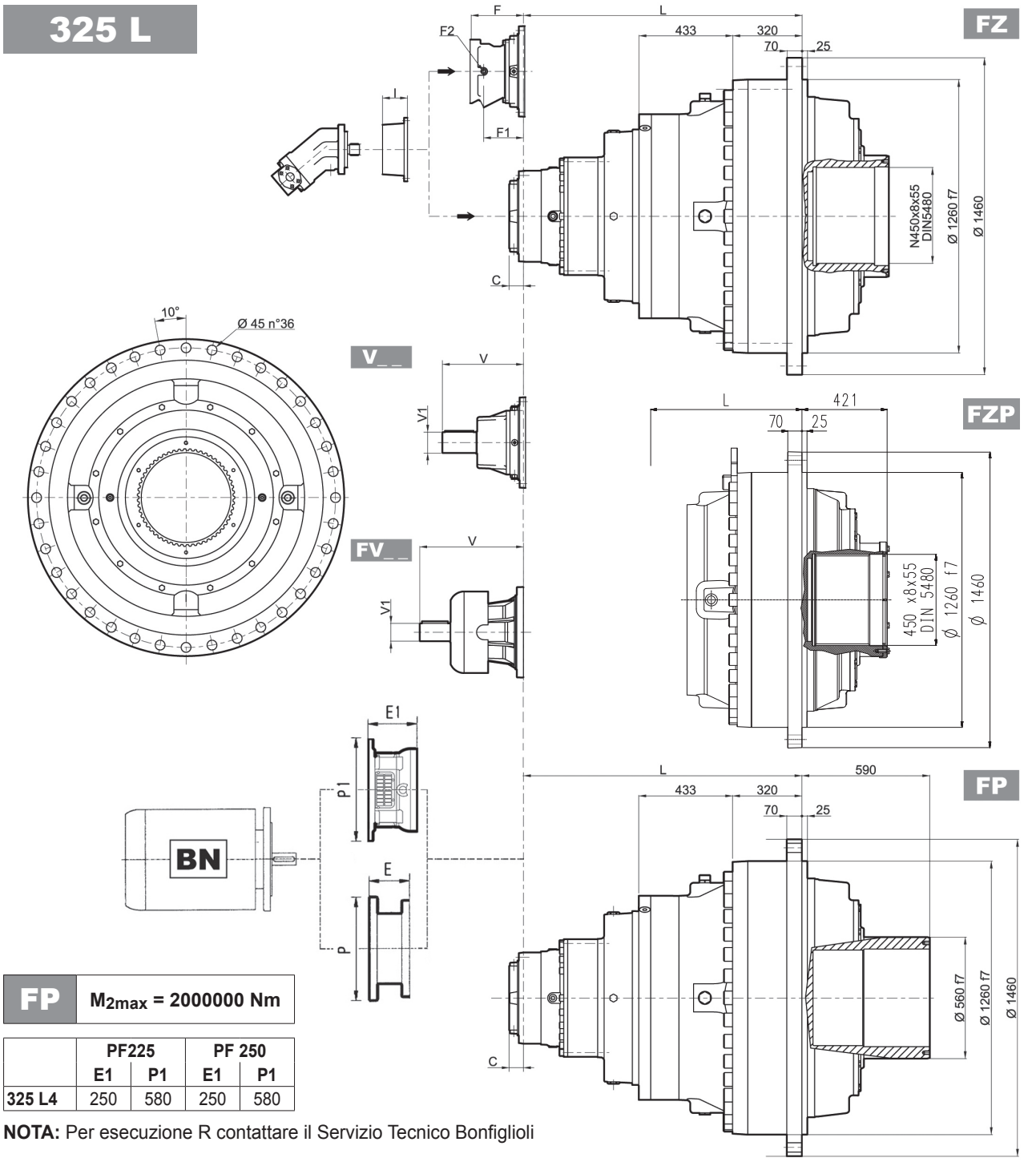

FP	M_{2max} = 2000000 Nm

	PF225		PF 250	
	E1	P1	E1	P1
325 L4	250	580	250	580

NOTA: Per esecuzione R contattare il Servizio Tecnico Bonfiglioli

	L		Kg							
	FZ - FZP	FP	FZ - FZP	FP	V	V1	Kg	V	V1	Kg
325 L1	Consultare il Servizio Tecnico Bonfiglioli									
325 L2	698	698	5700	5900	—	—	—	—	—	—
325 L3	1081	1081	6000	6200	556	120	125	—	—	—
325 L4	1293	1293	6150	6350	315	80	35	456	80	85

										P200		P225		P250	
	C	Input	I	F	F1	F2	Type	Input	Kg	E	P	E	P	E	P
325 L1	—	—		—	—	—	—	—	—	—	—	—	—	—	—
325 L2	245	G		—	—	—	—	—	—	—	—	—	—	—	—
325 L3	116	E		—	—	—	—	—	—	—	—	—	—	—	—
325 L4	81	D	457	201	48	1/4 G	6	B	22	267	400	297	450	297	550

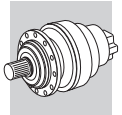

325 L

FZ

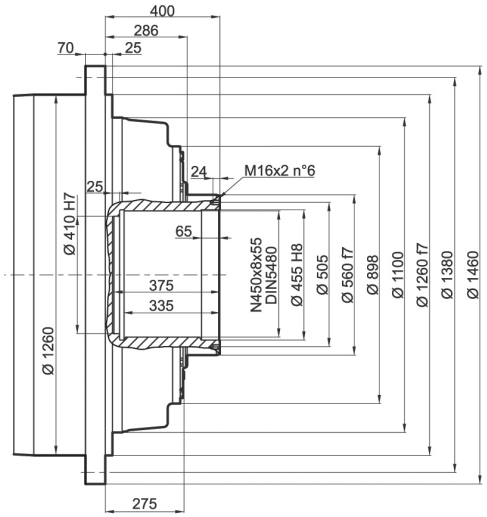

FP

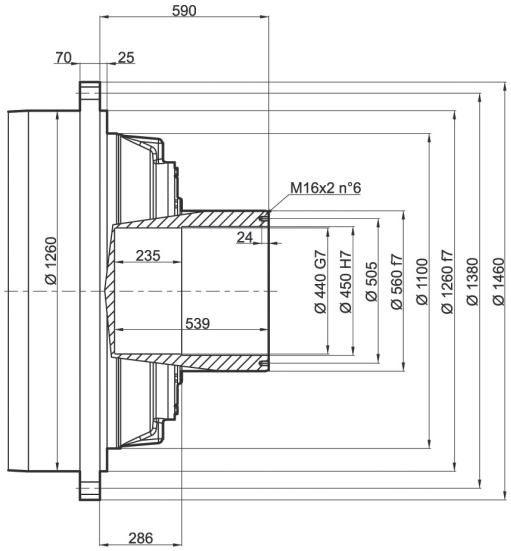

FZP

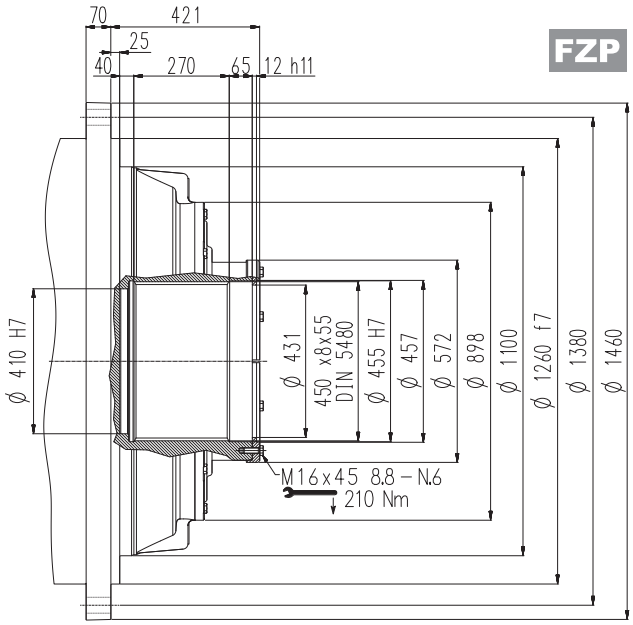

Giunto ad attrito

G0A

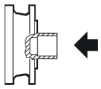

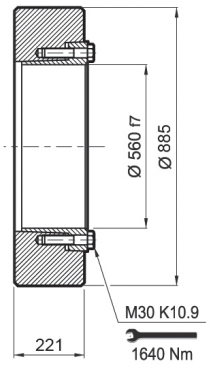

FP	M_{2max} = 2000000 Nm

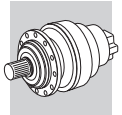

325 L

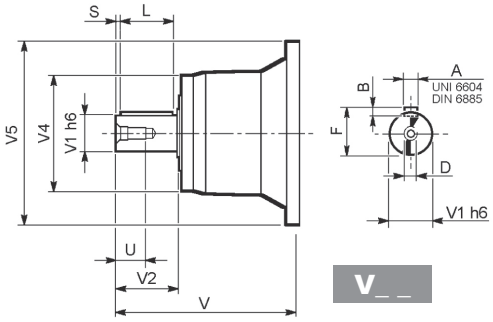

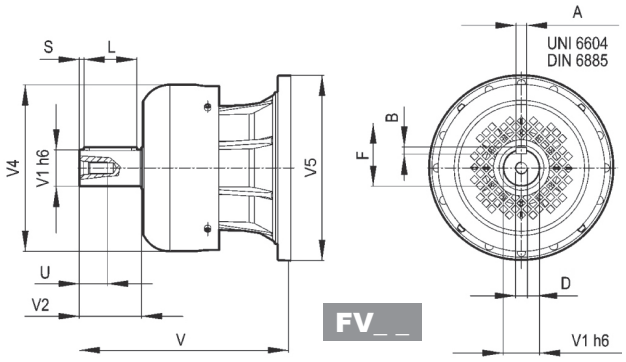

		V	V1	V2	V4	V5	A	B	F	L	S	D	U
325 L3	**V15B**	556	120	210	230	542	32	18	127	180	15	M24	50
325 L4	**V11B**	348	80	130	200	428	22	14	85	110	10	M16	36
	FV11B	456	80	130	347.5	428	22	14	85	110	10	M16	36

325 L

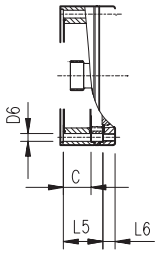

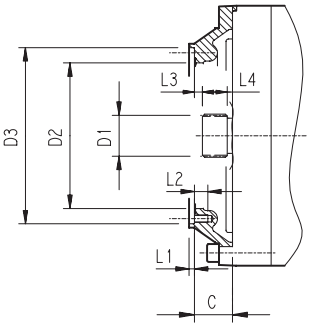

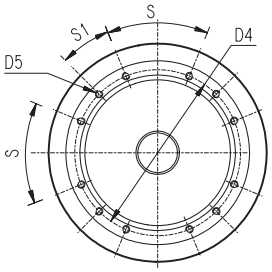

		C	D1	D2	D3	D4	D5	D6	L1	L2	L3	L4	L5	L6	S	S1	Input
325 L1	Consultare il Servizio Tecnico Bonfiglioli																
325 L2	**V9AG**	245	150x5x28 DIN 5480	444	474 g7	503	M20 n°20	20	5	40	20	82	—	—	30°	15°	G
325 L3	**V9AE**	116	100x94 DIN 5482	340	412 H7	390	M16 n°18	—	7	30	8	55	—	—	20°	20°	E
325 L4	**V9AD**	81	80x74 DIN 5482	270	335 H7	314	M16 n°8	—	5	30	8.5	40	—	—	60°	30°	D

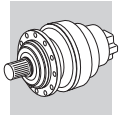

325 L

Carichi radiali ed assiali ammissibili sull'albero lento per un valore di $Fh_2 : n_2 \cdot h = 100000$

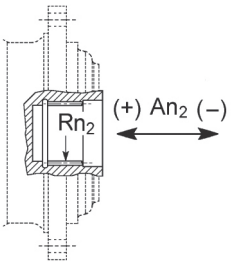

	Rn_2	An_2 (+)	An_2 (-)
FZ	510575	174060	69624

Fattore fh_2 correttivo per carichi sugli alberi	$Fh_2 = n_2 \cdot h$		10000	25000	50000	100000	500000	1000000
	fh_2	**FZ**	**2.15**	**1.59**	**1.26**	**1.00**	**0.58**	**0.46**

Carichi radiali ammissibili sull'albero veloce per un valore di $Fh_1 : n_1 \cdot h = 250000$

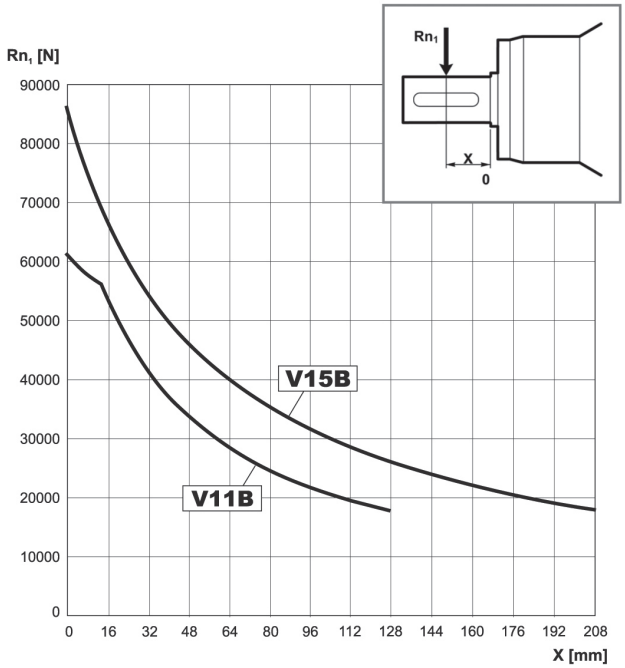

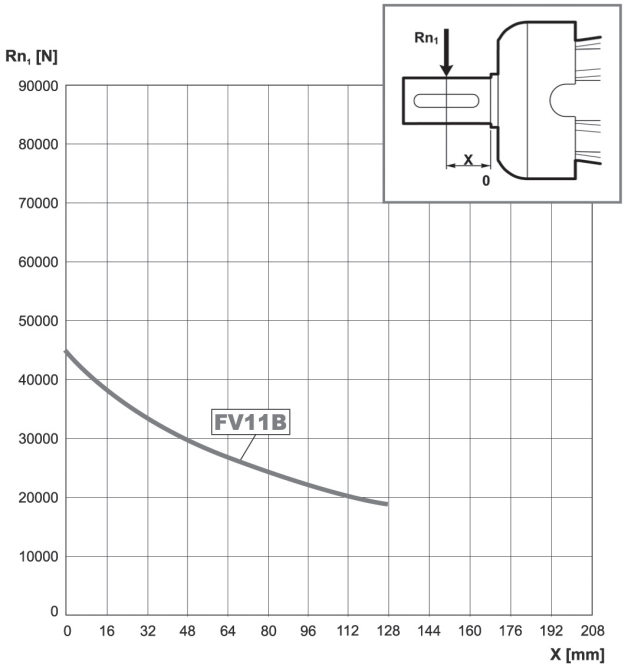

Fattore fh_1 correttivo per carichi sugli alberi	$Fh_1 = n_1 \cdot h$	250000	500000	1000000	2000000	5000000	10000000
	fh_1	**1**	**0.79**	**0.63**	**0.50**	**0.37**	**0.29**

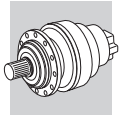

ALBERO MACCHINA

FP

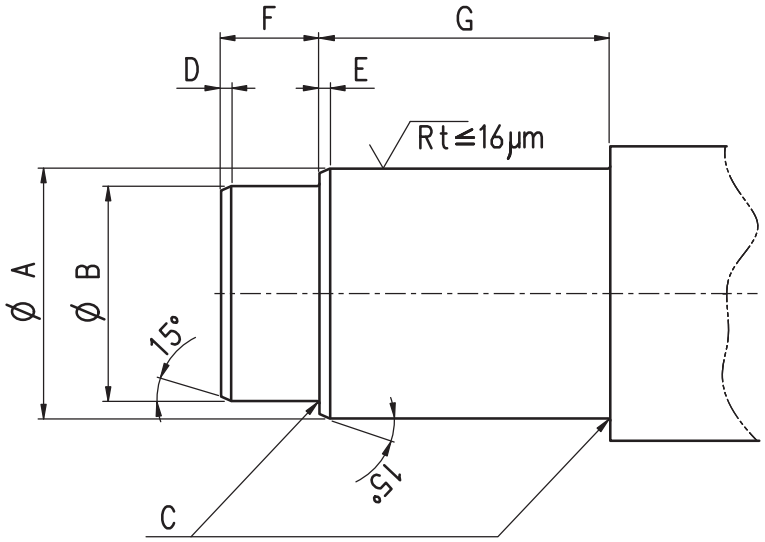

	A Ø H7 - g6 [mm]	B Ø H7 - g6 [mm]	C [mm]	D [mm]	E [mm]	F [mm]	G [mm]	Materiale albero
300	42	35	1.6	2	2	18	38	Materiale suggerito: Acciaio con carico di rottura $\sigma_R \geq 700MPa$
301	52	35	1.6	2	2	18	38	
303 - 304 - 305	75	65	1.6	2	2	30	65	
306	90	75	1.6	3	3	55	85	
307	100	85	1.6	3	3	40	95	
309	120	—	1.6	—	3	—	140	
310M	130	—	1.6	—	3	—	155	
311M	135	—	1.6	—	3	—	150	
313M	140	130	2	3	3	45	150	
314M	180	160	1.6	3	3	50	200	
315M	180	160	1.6	3	3	50	200	
316M	180	165	1.6	3	3	90	180	
317M	200	—	1.6	—	3	—	250	
318M	220	200	2	3	3	130	180	
319	280	—	2	—	3	—	300	
321	320	—	2	—	3	—	300	
323	410	—	2	—	3	—	250	
325	450	—	2	—	3	—	300	

FDK

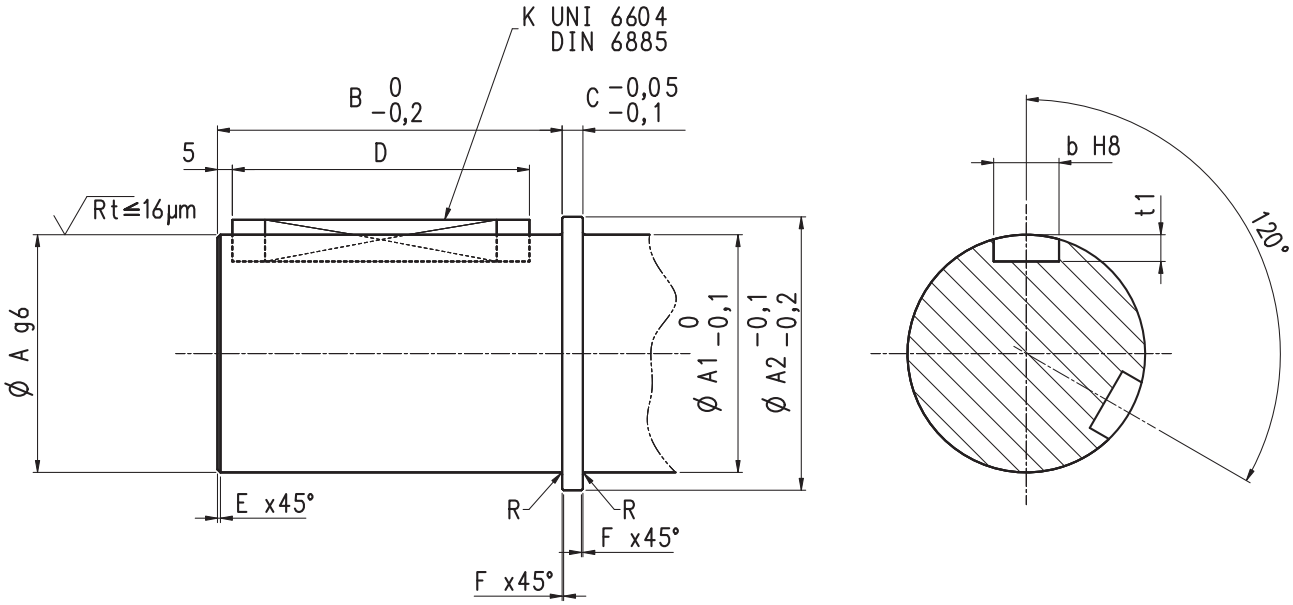

	A	B	A1	A2	C	Materiale albero	Dimensioni linguetta		b	t_1	E	F	R
	Ø albero	Lunghezza					Linguetta UNI 6604 / DIN 6885				Geometria smusso		Raccordi
	[mm]	[mm]	[mm]	[mm]	[mm]	Materiale suggerito: Acciaio con carico di rottura $\sigma_R \geq 900MPa$	—	[mm]	[mm]	[mm]	[mm]	[mm]	[mm]
300	35 g6	64	35	39	4		N°2 x 120°	10x8x50	10 H8	Dimensione secondo normativa UNI6604 / DIN 6885	1 x 45°	0.5 x 45°	(*)
301	35 g6	64	35	43	5		N°2 x 120°	10x8x50	10 H8		1 x 45°	0.5 x 45°	0.5
303 - 304 - 305	65 g6	95	65	75	6		N°2 x 120°	18x11x80	18 H8		1 x 45°	0.5 x 45°	0.8
306	80 g6	116	80	92	7		N°2 x 120°	22x14x100	22 H8		1 x 45°	0.5 x 45°	0.8
307	90 g6	141	90	102	8		N°2 x 120°	25x14x125	25 H8		2 x 45°	1 x 45°	0.8
309	120 g6	128	120	136	10		N°2 x 120°	32x18x110	32 H8		2 x 45°	1 x 45°	1.6
310M	130 g6	138	130	146	10		N°2 x 120°	32x18x120	32 H8		2 x 45°	1 x 45°	1.6

(*) Gola di scarico (UNI 4386 - 75 E0.6x0.3)

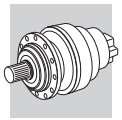

FZP

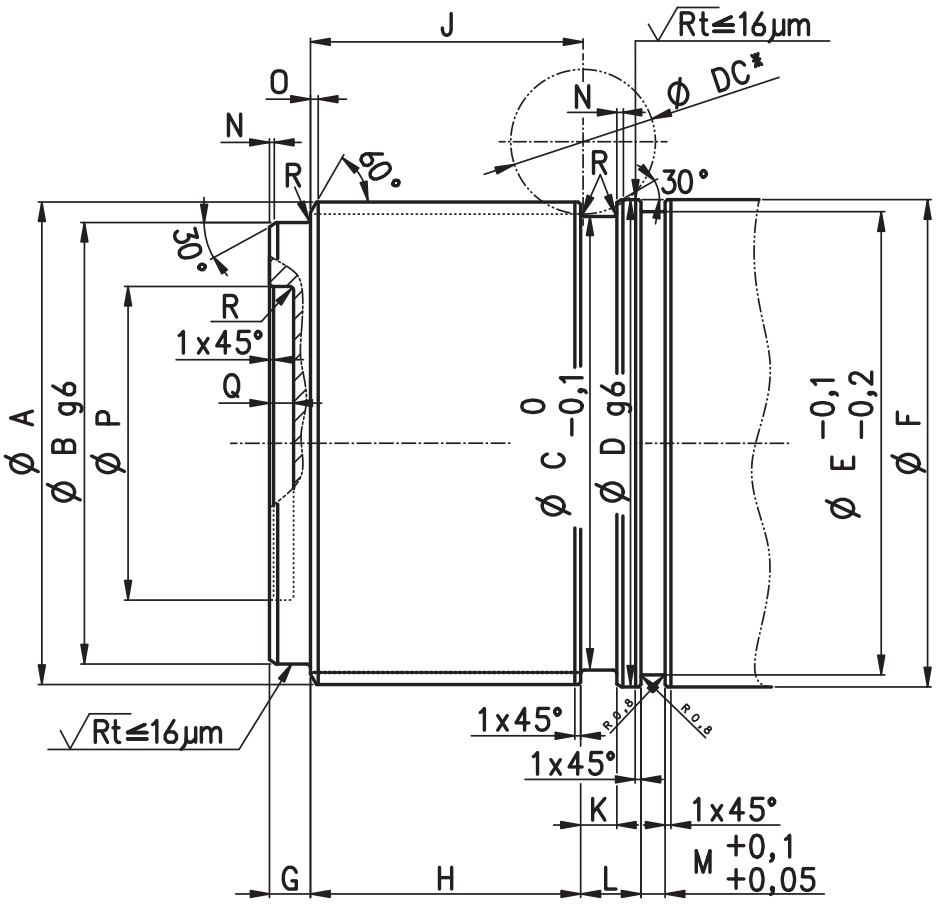

	A	B	C	Materiale albero	D	E	F	G	H	K	J	L	M	N	O	P	Q	R	DC*
	Scanalato DIN 5480	Ø H7 - g6	Diametro gola																
	[mm]	[mm]	[mm]		[mm]	[mm]	[mm]	[mm]	[mm]	[mm]	[mm]	[mm]	[mm]	[mm]	[mm]	[mm]	[mm]	[mm]	[mm]
311M	120x3x38	108	112	Materiale suggerito: Acciaio con carico di rottura $\sigma_R \geq 900MPa$	124	112	124	19	69	9	70	18,5	6	1	1.6	—	—	1.6	60
313M	140x5x26	110	132		142	132	142	26	83	18	84	30	6	1	2	—	—	3	60
314M	150x5x28	136	136		152	136	152	16	103	8	104	20	8	1	2	—	—	1.6	60
315M	150x5x28	136	136		152	136	152	16	103	8	104	20	8	1	2	—	—	1.6	60
316M	170x5x32	150	154		172	154	172	30	113	20	114	45	9	1	3	—	—	3	60
317M	200x5x38	187	186		202	192	202	16	100	19	101	33	9	1	3.5	130	10	1.6	60
318M	210x5x40	190	194		212	194	212	27	133	20	134	45	9	2	3	—	—	3	60
319	260x5x50	248	243		265	243	265	29	144	20	145	40	11	2	3	—	—	3	60
321	300x8x36	282	281		305	281	305	25	158	25	159	50	12	2	3	—	—	3	70
323	400x8x48	360	381		405	381	405	35	254	26	256	53,5	12	2	4	—	—	5	70
325	450x8x55	410	431		455	431	455	34	272	24	274	66	12	2	4	—	—	5	70

* Diametro massimo creatore

BRACCIO DI REAZIONE

	L1 [mm]	L2 [mm]
300	300	450
301	580	
303	350	500
304		
305	370	
306	410	600
307	490	700
309	600	900
310M	1030	1000
311M	800	1100
313M	900	1200
314M	1100	1400
315M		
316M	1280	1500
317M	1300	1600
318M	1900	1800
319	1500	2000
321	1500	
323	1750	3000
325	2050	3200

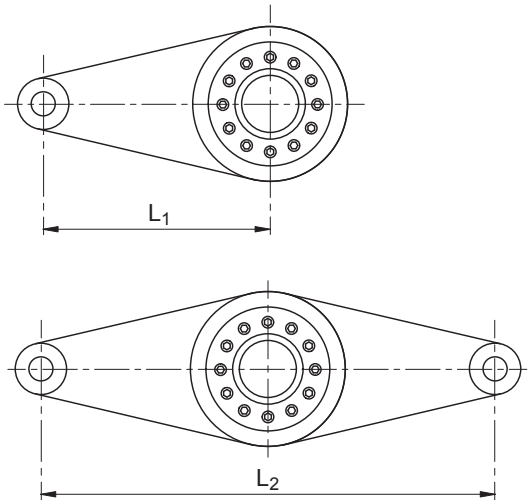

NB: Disegni a scopo illustrativo

Materiale suggerito: S275JR - UNI EN 10025 o S355JR - UNI EN 10025.

KIT BRACCIO DI REAZIONE PER VERSIONE FP

Su richiesta è possibile dotare i riduttori della serie 300M in versione FP di un kit “Braccio di reazione”. Per ulteriori informazioni contattare il nostro Servizio Tecnico.

	L1 [mm]	i [mm]
300	300	55
301	580	
303	350	80
304		
305	370	
306	410	115
307	490	
309	600	
310M	1030	135
311M	800	155
313M	900	160
314M	1100	200
315M		
316M	1280	210
317M	1300	240
318M	1900	280
319	1500	320
321	1500	360
323	1750	400
325	2050	440

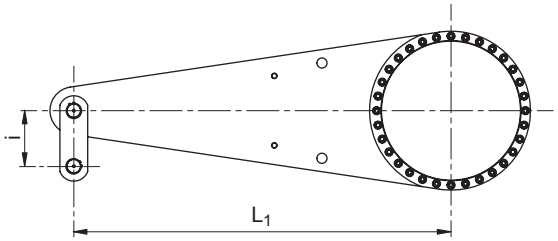

NB: Disegno a scopo illustrativo

Materiale suggerito: S275JR - UNI EN 10025 o S355JR - UNI EN 10025.

FRENI E MOTORI IDRAULICI

H1 SIMBOLOGIA E UNITA' DI MISURA

Simbolo	Unità di misura	Descrizione
V	[cm^3]	Cilindrata
p	[bar]	Pressione
pA. pB	[bar]	Pressione sugli attacchi A e B
Q	[l/min]	Portata
ηt		Rendimento totale
ηmh		Rendimento meccanico-idraulico

Simbolo	Unità di misura	Descrizione
ηv		Rendimento volumetrico
n	[min^{-1}]	Velocità angolare
M	[Nm]	Coppia effettiva all'albero motore
cont		Valore generico, continuo nel tempo
int		Valore generico, intermittente nel tempo

H2 FRENI IDRAULICI NEGATIVI A DISCHI MULTIPLI

DESCRIZIONE

Sono freni statici di sicurezza, in quanto l'azione frenante è sviluppata quando la pressione idraulica di comando è nulla, mentre quando questa raggiunge i valori minimi per lo sbloccaggio, l'azione frenante cessa. Applicati in entrata ai riduttori, costituiscono un gruppo unico e compatto con essi. Si adottano in tutte quelle applicazioni dove è assolutamente necessario arrestare e tenere bloccata la trasmissione anche sotto l'azione di coppie esterne.

Applicabili in:

- argani
- rotazione torrette
- freni di parcheggio su macchine semoventi
- applicazioni industriali

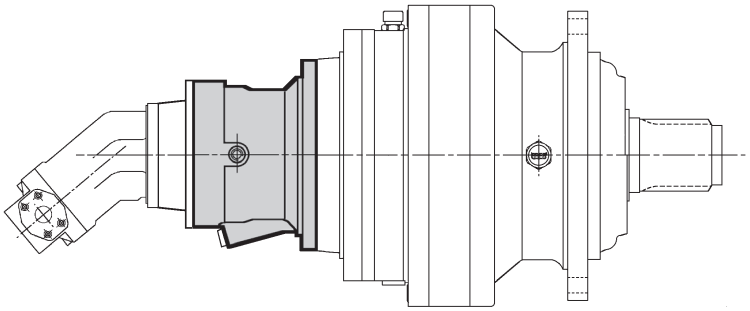

H2.1 Dati tecnici freni

(A 22)

		Tipo																	
		4.							5.					6.					
		A	B	D	F	H	K	L	B	C	E	G	K	B	C	E	G	K	L
Coppia frenante statica Mb	Nm ±10%	50	100	160	260	330	400	440	400	500	630	800	1000	850	1100	1500	2100	2600	3200
Pressione minima apertura	bar	10	20	30	20	25	30	34	20	27	20	26	32	14	19	25	19	24	29
Pressione massima comando	bar	320																	
Volume d'olio per comando apertura freno	cm^3	6.65	6.65	6.65	6.65	6.65	6.65	6.65	13.96	13.96	13.96	13.96	13.96	37.2	37.2	37.2	37.2	37.2	37.2

H3 ENTRATE PER MOTORI IDRAULICI

I tipi di predisposizioni e le grandezze disponibili sono indicati nelle pagine seguenti.
Gli orientamenti standard (A) delle flange attacco motore, sono indicati negli schemi seguenti, considerando il punto di vista dal lato ingresso sul riduttore.

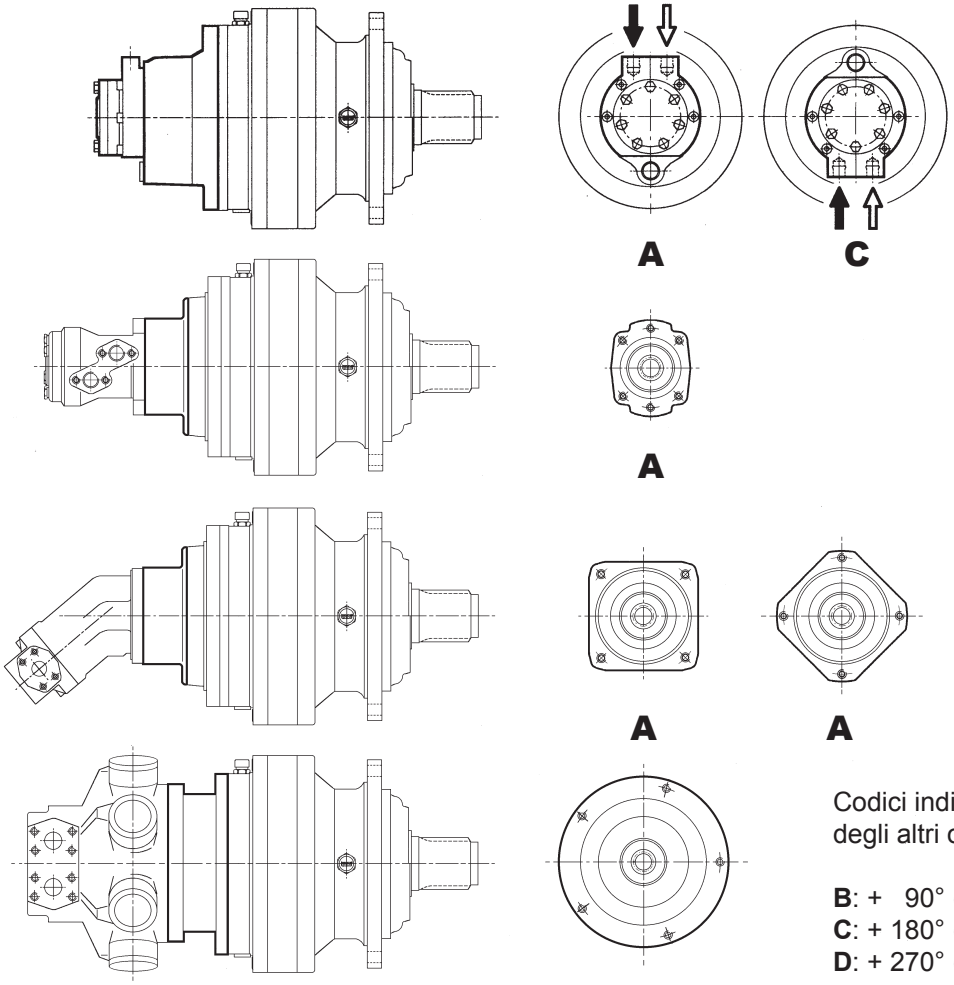

Codici indicativi
degli altri orientamenti:

B: + 90° (senso orario)
C: + 180° (senso orario)
D: + 270° (senso orario)

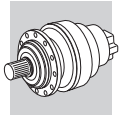

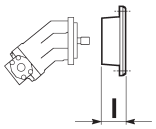

	CODE	SAE Standard J744c											
		SAE A 16/32 z9	SAE A ø15,875	SAE B 16/32 z13	SAE B ø22,2	SAE BB 16/32 z15	SAE BB ø25,4	SAE C 12/24 z14	SAE C ø31,7	SAE CC 12/24 z17	SAE C ø38,1	SAE D 8/16 z13	SAE E 8/16 z13
		S5AM	S5AN	S5BA	S5BB	S5BM	S5BN	S5CA	S5CB	S5CP	S5CQ	S5DA	S5EA
		l											
300	L1-L2-L3-L4	42	42	52	52	52	52	64	64	80	80	81	
	R2-R3-R4	42	42	52	52	52	52	64	64	80	80	81	
301	L1-L2-L3-L4	42	42	52	52	52	52	64	64	80	80	81	
	R2-R3-R4	42	42	52	52	52	52	64	64	80	80	81	
303	L1	42	42	52	52	52	52	64	64	80	80	81	
	L2-L3-L4	42	42	52	52	52	52	64	64	80	80	81	
	R2-R3-R4	42	42	52	52	52	52	64	64	80	80	81	
304	L1	42	42	52	52	52	52	64	64	80	80	81	
	L2-L3-L4	42	42	52	52	52	52	64	64	80	80	81	
	R2-R3-R4	42	42	52	52	52	52	64	64	80	80	81	
305	L1	42	42	52	52	52	52	64	64	80	80	81	
	L2-L3-L4	42	42	52	52	52	52	64	64	80	80	81	
	R2-R3-R4	42	42	52	52	52	52	64	64	80	80	81	
306	L1											101	113
	L2	42	42	52	52	52	52	64	64	80	80	81	
	L3-L4	42	42	52	52	52	52	64	64	80	80	81	
	R2-R3-R4	42	42	52	52	52	52	64	64	80	80	81	
307	L1											101	113
	L2	42	42	52	52	52	52	64	64	80	80	81	
	L3-L4	42	42	52	52	52	52	64	64	80	80	81	
	R2	42	42	52	52	52	52	64	64	80	80	81	
	R3-R4	42	42	52	52	52	52	64	64	80	80	81	
309	L1											101	113
	L2	42	42	52	52	52	52	64	64	80	80	81	
	L3-L4	42	42	52	52	52	52	64	64	80	80	81	
	R2	42	42	52	52	52	52	64	64	80	80	81	
	R3-R4	42	42	52	52	52	52	64	64	80	80	81	
310M	L1											146	158
	L2											101	113
	L3	42	42	52	52	52	52	64	64	80	80	81	
	L4	42	42	52	52	52	52	64	64	80	80	81	
	R2(B)-R2(C)											101	113
	R3-R4	42	42	52	52	52	52	64	64	80	80	81	
311M	L1												
	L2											101	113
	L3	42	42	52	52	52	52	64	64	80	80	81	
	L4	42	42	52	52	52	52	64	64	80	80	81	
	R2(B)-R2(C)											101	113
	R3-R4	42	42	52	52	52	52	64	64	80	80	81	
313M	L1												
	L2											101	113
	L3	42	42	52	52	52	52	64	64	80	80	81	
	L4	42	42	52	52	52	52	64	64	80	80	81	
	R2(B)-R2(C)											101	113
	R3-R4	42	42	52	52	52	52	64	64	80	80	81	
314M	L1												
	L2											146	113
	L3	42	42	52	52	52	52	64	64	80	80	81	
	L4	42	42	52	52	52	52	64	64	80	80	81	
	R3(B)-R3(C)											101	113
	R4	42	42	52	52	52	52	64	64	80	80	81	
315M	L1												
	L2												
	L3											101	113
	L4	42	42	52	52	52	52	64	64	80	80	81	
	R3(B)-R3(C)											101	113
	R4	42	42	52	52	52	52	64	64	80	80	81	
316M	L1												
	L2												
	L3											101	113
	L4	42	42	52	52	52	52	64	64	80	80	81	
	R3(B)-R3(C)											101	113
	R4	42	42	52	52	52	52	64	64	80	80	81	
317M	L1												
	L2												
	L3											101	113
	L4	42	42	52	52	52	52	64	64	80	80	81	
	R3(B)-R3(C)											101	113
	R4	42	42	52	52	52	52	64	64	80	80	81	
318M	L1												
	L2												
	L3												
	L4											101	113
	R4(B)-R4(C)											101	113
319	L1												
	L2												
	L3												
	L4											101	113
	R4(B)-R4(C)											101	113
321	L1												
	L2												
	L3												
	L4											101	113
	R4(B)-R4(C)											101	113

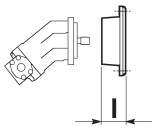

	CODE	CALZONI								CHAR-LYNN (EATON)								
		CALZONI MR190 N z8	CALZONI MR300 N z8	CALZONI MRP300 N z8	CALZONI MR450 N z8	CALZONI MR700 N z8	CALZONI MR1100 N z8	CALZONI MR1800 N z10	CALZONI MR2800 N z10	SERIE 2000 SAE A 1" 6B	SERIE 2000 SAE A ø25,4	SERIE 2000 SAE A ø32	SERIE 2000 SAE A 12/24 z14	SERIE 2000 BEARINGLESS 1 2/24 z12	SERIE 4000 SAE B ø31,75	SERIE 4000 SAE C 12/24 z17	SERIE 6000 SAE C ø38,1	SERIE 6000 SAE C 12/24 z17
		C0AA	C0AD	C0BL	C0AG	C0AL	C0AP	C0AS	C0AV	S5AQ	S5AS	D0AG	D0AH	E2AA	S5BP	S5CP	S5CQ	S5CP
										I								
300	L1-L2-L3-L4	64	78	78						42	42	64	64	52	68	80	80	80
	R2-R3-R4	64	78	78						42	42	64	64	52	68	80	80	80
301	L1-L2-L3-L4	64	78	78						42	42	64	64	52	68	80	80	80
	R2-R3-R4	64	78	78						42	42	64	64	52	68	80	80	80
303	L1	64	78	78						42	42	64	64	52	68	80	80	80
	L2-L3-L4	64	78	78						42	42	64	64	52	68	80	80	80
	R2-R3-R4	64	78	78						42	42	64	64	52	68	80	80	80
304	L1	64	78	78						42	42	64	64	52	68	80	80	80
	L2-L3-L4	64	78	78						42	42	64	64	52	68	80	80	80
	R2-R3-R4	64	78	78						42	42	64	64	52	68	80	80	80
305	L1	64	78	78						42	42	64	64	52	68	80	80	80
	L2-L3-L4	64	78	78						42	42	64	64	52	68	80	80	80
	R2-R3-R4	64	78	78						42	42	64	64	52	68	80	80	80
306	L1				98	102	133											
	L2	64	78	78						42	42	64	64	52	68	80	80	80
	L3-L4	64	78	78						42	42	64	64	52	68	80	80	80
	R2-R3-R4	64	78	78						42	42	64	64	52	68	80	80	80
307	L1				98	102	133											
	L2	64	78	78						42	42	64	64	52	68	80	80	80
	L3-L4	64	78	78						42	42	64	64	52	68	80	80	80
	R2	64	78	78						42	42	64	64	52	68	80	80	80
	R3-R4	64	78	78						42	42	64	64	52	68	80	80	80
309	L1				98	102	133											
	L2	64	78	78						42	42	64	64	52	68	80	80	80
	L3-L4	64	78	78						42	42	64	64	52	68	80	80	80
	R2	64	78	78						42	42	64	64	52	68	80	80	80
	R3-R4	64	78	78						42	42	64	64	52	68	80	80	80
310M	L1				143	147	178											
	L2				98	102	133											
	L3	64	78	78						42	42	64	64	52	68	80	80	80
	L4	64	78	78						42	42	64	64	52	68	80	80	80
	R2(B)-R2(C)				98	102	133											
	R3-R4	64	78	78						42	42	64	64	52	68	80	80	80
311M	L1					130	130	165	200									
	L2				98	102	133											
	L3	64	78	78						42	42	64	64	52	68	80	80	80
	L4	64	78	78						42	42	64	64	52	68	80	80	80
	R2(B)-R2(C)				98	102	133											
	R3-R4	64	78	78						42	42	64	64	52	68	80	80	80
313M	L1					130	130	165	200									
	L2				98	102	133											
	L3	64	78	78						42	42	64	64	52	68	80	80	80
	L4	64	78	78						42	42	64	64	52	68	80	80	80
	R2(B)-R2(C)				98	102	133											
	R3-R4	64	78	78						42	42	64	64	52	68	80	80	80
314M	L1																	
	L2				98	102	133											
	L3	64	78	78						42	42	64	64	52	68	80	80	80
	L4	64	78	78						42	42	64	64	52	68	80	80	80
	R3(B)-R3(C)				98	102	133											
	R4	64	78	78						42	42	64	64	52	68	80	80	80
315M	L1																	
	L2					130	130	165	200									
	L3				98	102	133											
	L4	64	78	78						42	42	64	64	52	68	80	80	80
	R3(B)-R3(C)				98	102	133											
	R4	64	78	78						42	42	64	64	52	68	80	80	80
316M	L1																	
	L2					130	130	165	200									
	L3				98	102	133											
	L4	64	78	78						42	42	64	64	52	68	80	80	80
	R3(B)-R3(C)				98	102	133											
	R4	64	78	78						42	42	64	64	52	68	80	80	80
317M	L1																	
	L2					130	130	165	200									
	L3				98	102	133											
	L4	64	78	78						42	42	64	64	52	68	80	80	80
	R3(B)-R3(C)				98	102	133											
	R4	64	78	78						42	42	64	64	52	68	80	80	80
318M	L1																	
	L2																	
	L3					130	130	165	200									
	L4				98	102	133											
	R4(B)-R4(C)				98	102	133											
319	L1																	
	L2																	
	L3					130	130	165	200									
	L4				98	102	133											
	R4(B)-R4(C)				98	102	133											
321	L1																	
	L2																	
	L3					130	130	165	200									
	L4				98	102	133											
	R4(B)-R4(C)				98	102	133											

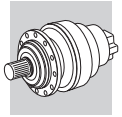

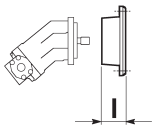

		SAUER DANFOSS (orbit)									DENISON Hydraulics							
		OMP-OMR 50/315 ø25	OMP-OMR 50/315 SAE 1" 6B	OMS 80/315 ø32	OMS 80/315 12/24 z14	OMSS 80/315 12/24 z12	OMT 160/400 ø40	OMT 160/400 12/24 z17	OMTS 160/400 12/24 z16	OMVS 315/800 10/20 z16	M6-M7-M8 *3** 12/24 z14	M11-M14 *3** 8/16 z13	M3 B 16/32 z9	M4C-M4SC 16/32 z13	M4D-M4SD 12/24 z14	M4DC-M4S DC 12/24 z14	M4E-M4SE 12/24 z14	M5BS 16/32 z13
		S5AP	S5AQ	D0AG	D0AH	D0AL	D0AM	D0AN	D0AQ	D0AU	S5CA	S5EA	S5AM	S5BA	S5CA	S5CA	S5CA	S5BA
	CODE									I								
300	L1-L2-L3-L4	42	42	64	64	37	112	112	57		64		42	52	64	64	64	52
	R2-R3-R4	42	42	64	64	37	112	112	57		64		42	52	64	64	64	52
301	L1-L2-L3-L4	42	42	64	64	37	112	112	57		64		42	52	64	64	64	52
	R2-R3-R4	42	42	64	64	37	112	112	57		64		42	52	64	64	64	52
303	L1	42	42	64	64	37	112	112	57		64		42	52	64	64	64	52
	L2-L3-L4	42	42	64	64	37	112	112	57		64		42	52	64	64	64	52
	R2-R3-R4	42	42	64	64	37	112	112	57		64		42	52	64	64	64	52
304	L1	42	42	64	64	37	112	112	57		64		42	52	64	64	64	52
	L2-L3-L4	42	42	64	64	37	112	112	57		64		42	52	64	64	64	52
	R2-R3-R4	42	42	64	64	37	112	112	57		64		42	52	64	64	64	52
305	L1	42	42	64	64	37	112	112	57		64		42	52	64	64	64	52
	L2-L3-L4	42	42	64	64	37	112	112	57		64		42	52	64	64	64	52
	R2-R3-R4	42	42	64	64	37	112	112	57		64		42	52	64	64	64	52
306	L1									70		113						
	L2	42	42	64	64	37	112	112	57		64		42	52	64	64	64	52
	L3-L4	42	42	64	64	37	112	112	57		64		42	52	64	64	64	52
	R2-R3-R4	42	42	64	64	37	112	112	57		64		42	52	64	64	64	52
307	L1									70		113						
	L2	42	42	64	64	37	112	112	57		64		42	52	64	64	64	52
	L3-L4	42	42	64	64	37	112	112	57		64		42	52	64	64	64	52
	R2	42	42	64	64	37	112	112	57		64		42	52	64	64	64	52
	R3-R4	42	42	64	64	37	112	112	57		64		42	52	64	64	64	52
309	L1									70		113						
	L2	42	42	64	64	37	112	112	57		64		42	52	64	64	64	52
	L3-L4	42	42	64	64	37	112	112	57		64		42	52	64	64	64	52
	R2	42	42	64	64	37	112	112	57		64		42	52	64	64	64	52
	R3-R4	42	42	64	64	37	112	112	57		64		42	52	64	64	64	52
310M	L1									115		158						
	L2									70		113						
	L3	42	42	64	64	37	112	112	57		64		42	52	64	64	64	52
	L4	42	42	64	64	37	112	112	57		64		42	52	64	64	64	52
	R2(B)-R2(C)									70		113						
	R3-R4	42	42	64	64	37	112	112	57		64		42	52	64	64	64	52
311M	L1																	
	L2									70		113						
	L3	42	42	64	64	37	112	112	57		64		42	52	64	64	64	52
	L4	42	42	64	64	37	112	112	57		64		42	52	64	64	64	52
	R2(B)-R2(C)									70		113						
	R3-R4	42	42	64	64	37	112	112	57		64		42	52	64	64	64	52
313M	L1																	
	L2									70		113						
	L3	42	42	64	64	37	112	112	57		64		42	52	64	64	64	52
	L4	42	42	64	64	37	112	112	57		64		42	52	64	64	64	52
	R2(B)-R2(C)									70		113						
	R3-R4	42	42	64	64	37	112	112	57		64		42	52	64	64	64	52
314M	L1																	
	L2									70		113						
	L3	42	42	64	64	37		112	57		64		42	52	64	64	64	52
	L4	42	42	64	64	37	112	112	57		64		42	52	64	64	64	52
	R3(B)-R3(C)									70		113						
	R4	42	42	64	64	37	112	112	57		64		42	52	64	64	64	52
315M	L1																	
	L2																	
	L3									70		113						
	L4	42	42	64	64	37	112	112	57		64		42	52	64	64	64	52
	R3(B)-R3(C)									70		113						
	R4	42	42	64	64	37	112	112	57		64		42	52	64	64	64	52
316M	L1																	
	L2																	
	L3									70		113						
	L4	42	42	64	64	37	112	112	57		64		42	52	64	64	64	52
	R3(B)-R3(C)									70		113						
	R4	42	42	64	64	37	112	112	57		64		42	52	64	64	64	52
317M	L1																	
	L2																	
	L3									70		113						
	L4	42	42	64	64	37	112	112	57		64		42	52	64	64	64	52
	R3(B)-R3(C)									70		113						
	R4	42	42	64	64	37	112	112	57		64		42	52	64	64	64	52
318M	L1																	
	L2																	
	L3																	
	L4									70		113						
	R4(B)-R4(C)									70		113						
319	L1																	
	L2																	
	L3																	
	L4									70		113						
	R4(B)-R4(C)									70		113						
321	L1																	
	L2																	
	L3																	
	L4									70		113						
	R4(B)-R4(C)									70		113						

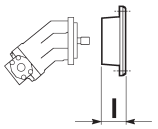

	CODE	LINDE							
		MMF 43 16/32 z15	MMF 63 12/24 z14	HMF 28-35-02 16/32 z15	HMF 50-02 16/32 z21	HMF-HMV 75-02 16/32 z21	HMF-HMV 105-02 16/32 z23	HMF-HMV 135-02 16/32 z27	BMF-BMV 186 50x2 Z24
		S5BM	S5CA	S5BM	S5CE	S5CE	S5CD	S5DC	I5AF
		I							
300	L1-L2-L3-L4	52	64	52	64	64	64	81	
	R2-R3-R4	52	64	52	64	64	64	81	
301	L1-L2-L3-L4	52	64	52	64	64	64	81	
	R2-R3-R4	52	64	52	64	64	64	81	
303	L1	52	64	52	64	64	64	81	
	L2-L3-L4	52	64	52	64	64	64	81	
	R2-R3-R4	52	64	52	64	64	64	81	
304	L1	52	64	52	64	64	64	81	
	L2-L3-L4	52	64	52	64	64	64	81	
	R2-R3-R4	52	64	52	64	64	64	81	
305	L1	52	64	52	64	64	64	81	
	L2-L3-L4	52	64	52	64	64	64	81	
	R2-R3-R4	52	64	52	64	64	64	81	
306	L1							101	121
	L2	52	64	52	64	64	64	81	
	L3-L4	52	64	52	64	64	64	81	
	R2-R3-R4	52	64	52	64	64	64	81	
307	L1							101	121
	L2	52	64	52	64	64	64	81	
	L3-L4	52	64	52	64	64	64	81	
	R2	52	64	52	64	64	64	81	
	R3-R4	52	64	52	64	64	64	81	
309	L1							101	121
	L2	52	64	52	64	64	64	81	
	L3-L4	52	64	52	64	64	64	81	
	R2	52	64	52	64	64	64	81	
	R3-R4	52	64	52	64	64	64	81	
310M	L1							146	166
	L2							101	121
	L3	52	64	52	64	64	64	81	
	L4	52	64	52	64	64	64	81	
	R2(B)-R2(C)							101	121
	R3-R4	52	64	52	64	64	64	81	
311M	L1								
	L2							101	121
	L3	52	64	52	64	64	64	81	
	L4	52	64	52	64	64	64	81	
	R2(B)-R2(C)							101	121
	R3-R4	52	64	52	64	64	64	81	
313M	L1								
	L2							101	121
	L3	52	64	52	64	64	64	81	
	L4	52	64	52	64	64	64	81	
	R2(B)-R2(C)							101	121
	R3-R4	52	64	52	64	64	64	81	
314M	L1								
	L2							101	121
	L3	52	64	52	64	64	64	81	
	L4	52	64	52	64	64	64	81	
	R3(B)-R3(C)							101	121
	R4	52	64	52	64	64	64	81	
315M	L1								
	L2								
	L3							101	121
	L4	52	64	52	64	64	64	81	
	R3(B)-R3(C)							101	121
	R4	52	64	52	64	64	64	81	
316M	L1								
	L2								
	L3							101	121
	L4	52	64	52	64	64	64	81	
	R3(B)-R3(C)							101	121
	R4	52	64	52	64	64	64	81	
317M	L1								
	L2								
	L3							101	121
	L4	52	64	52	64	64	64	81	
	R3(B)-R3(C)							101	121
	R4	52	64	52	64	64	64	81	
318M	L1								
	L2								
	L3								
	L4							101	121
	R4(B)-R4(C)							101	121
319	L1								
	L2								
	L3								
	L4							101	121
	R4(B)-R4(C)							101	121
321	L1								
	L2								
	L3								
	L4							101	121
	R4(B)-R4(C)							101	121

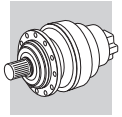

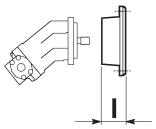

		BRUENINGHAUS HYDROMATIK (BOSCH REXROTH)														
		A2FM10-12-16 25x1,25 z18	A2FM23-28-32 A6VM 28 30x2 z14	A2FM23-28 ø25	A2FM45 32x2 z14	A2FM45-56 30x2 z14	A2FM56-63 A6VM55 35x2 z16	A2FM80-90 A6VM80 40x2 z18	A2FM80 35x2 z16	A2FM107-125 A6VM107 45x2 z21	A2FM107 A6VM107 40x2 z18	A2FM160-180 A6VM160 50x2 z24	A2FM160 A6VM160 45x2 z21	A2FM200 A6VM200 50x2 z24	A6VM250 50x2 z24	A2FM250 50x2 z24	A10FM45.30W A10VM63 16/32 z15
		H0AA	H0AE	H0AH	H0AI	H0BA	H0BC	H0BG	H0BI	H0CA	H0CC	H0CE	H0CG	H0CI	H0DA	H0DE	S5BM
	CODE	I															
300	L1-L2-L3-L4	42	52	52	64	64	64	75	75	101	101		101				52
	R2-R3-R4	42	52	52	64	64	64	75	75	101	101		101				52
301	L1-L2-L3-L4	42	52	52	64	64	64	75	75	101	101		101				52
	R2-R3-R4	42	52	52	64	64	64	75	75	101	101		101				52
303	L1	42	52	52	64	64	64	75	75	101	101		101				52
	L2-L3-L4	42	52	52	64	64	64	75	75	101	101		101				52
	R2-R3-R4	42	52	52	64	64	64	75	75	101	101		101				52
304	L1	42	52	52	64	64	64	75	75	101	101		101				52
	L2-L3-L4	42	52	52	64	64	64	75	75	101	101		101				52
	R2-R3-R4	42	52	52	64	64	64	75	75	101	101		101				52
305	L1	42	52	52	64	64	64	75	75	101	101		101				52
	L2-L3-L4	42	52	52	64	64	64	75	75	101	101		101				52
	R2-R3-R4	42	52	52	64	64	64	75	75	101	101		101				52
306	L1											101	101	101	113	113	
	L2	42	52	52	64	64	64	75	75	101	101		101				52
	L3-L4	42	52	52	64	64	64	75	75	101	101		101				52
	R2-R3-R4	42	52	52	64	64	64	75	75	101	101		101				52
307	L1											101	101	101	113	113	
	L2	42	52	52	64	64	64	75	75	101	101		101				52
	L3-L4	42	52	52	64	64	64	75	75	101	101		101				52
	R2	42	52	52	64	64	64	75	75	101	101		101				52
	R3-R4	42	52	52	64	64	64	75	75	101	101		101				52
309	L1											101	101	101	113	113	
	L2	42	52	52	64	64	64	75	75	101	101		101				52
	L3-L4	42	52	52	64	64	64	75	75	101	101		101				52
	R2	42	52	52	64	64	64	75	75	101	101		101				52
	R3-R4	42	52	52	64	64	64	75	75	101	101		101				52
310M	L1											146	146	146	158	158	
	L2											101	101	101	113	113	
	L3	42	52	52	64	64	64	75	75	101	101		101				52
	L4	42	52	52	64	64	64	75	75	101	101		101				52
	R2(B)-R2(C)											101	101	101	113	113	
	R3-R4	42	52	52	64	64	64	75	75	101	101		101				52
311M	L1																
	L2											101	101	101	113	113	
	L3	42	52	52	64	64	64	75	75	101	101		101				52
	L4	42	52	52	64	64	64	75	75	101	101		101				52
	R2(B)-R2(C)											101	101	101	113	113	
	R3-R4	42	52	52	64	64	64	75	75	101	101		101				52
313M	L1																
	L2											101	101	101	113	113	
	L3	42	52	52	64	64	64	75	75	101	101		101				52
	L4	42	52	52	64	64	64	75	75	101	101		101				52
	R2(B)-R2(C)											101	101	101	113	113	
	R3-R4	42	52	52	64	64	64	75	75	101	101		101				52
314M	L1																
	L2											101	101	101	113	113	
	L3	42	52	52	64	64	64	75	75	101	101		101		113		52
	L4	42	52	52	64	64	64	75	75	101	101		101				52
	R3(B)-R3(C)											101	101	101	113	113	
	R4	42	52	52	64	64	64	75	75	101	101		101				52
315M	L1																
	L2																
	L3											101	101	101	113	113	
	L4	42	52	52	64	64	64	75	75	101	101		101				52
	R3(B)-R3(C)											101	101	101	113	113	
	R4	42	52	52	64	64	64	75	75	101	101		101				52
316M	L1																
	L2																
	L3											101	101	101	113	113	
	L4	42	52	52	64	64	64	75	75	101	101		101				52
	R3(B)-R3(C)											101	101	101	113	113	
	R4	42	52	52	64	64	64	75	75	101	101		101				52
317M	L1																
	L2																
	L3											101	101	101	113	113	
	L4	42	52	52	64	64	64	75	75	101	101		101				52
	R3(B)-R3(C)											101	101	101	113	113	
	R4	42	52	52	64	64	64	75	75	101	101		101				52
318M	L1																
	L2																
	L3																
	L4											101	101	101	113	113	
	R4(B)-R4(C)											101	101	101	113	113	
319	L1																
	L2																
	L3																
	L4											101	101	101	113	113	
	R4(B)-R4(C)											101	101	101	113	113	
321	L1																
	L2																
	L3																
	L4											101	101	101	113	113	
	R4(B)-R4(C)											101	101	101	113	113	

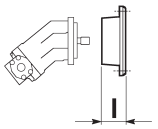

	CODE	SAI							KAWASAKI STAFFA		
		GM05 UNI 8953	GM1 UNI 8953	GM1/P1/S1 35x2 z16	GM2 UNI 8953	GM3 UNI 8953	GM4/GM5 UNI 8953	SAI L7 (9) N80x3 z25	B030 z17	B045 z17	HM (HD)B150 HM (HD)B200 5/10 z16
		S2BA	S2AB	S2CE	S2AF	S2DN	S2BF	S2BH	S1AB	S1AC	S1AL
		I									
300	L1-L2-L3-L4	73	37	57							
	R2-R3-R4	73	37	57							
301	L1-L2-L3-L4	73	37	57							
	R2-R3-R4	73	37	57							
303	L1	73	37	57							
	L2-L3-L4	73	37	57							
	R2-R3-R4	73	37	57							
304	L1	73	37	57							
	L2-L3-L4	73	37	57							
	R2-R3-R4	73	37	57							
305	L1	73	37	57							
	L2-L3-L4	73	37	57							
	R2-R3-R4	73	37	57							
306	L1		74		98	98	105		135	140	
	L2	73	37	57							
	L3-L4	73	37	57							
	R2-R3-R4	73	37	57							
307	L1		74		98	98	105		135	140	
	L2	73	37	57							
	L3-L4	73	37	57							
	R2	73	37	57							
	R3-R4	73	37	57							
309	L1		74		98	98	105		135	140	
	L2	73	37	57							
	L3-L4	73	37	57							
	R2	73	37	57							
	R3-R4	73	37	57							
310M	L1		119		143	143	150		180	185	
	L2		74		98	98	105		135	140	
	L3	73	37	57							
	L4	73	37	57							
	R2(B)-R2(C)		74		98	98	105		135	140	
	R3-R4	73	37	57							
311M	L1				135		150	90			187
	L2		74		98	98	105		135	140	
	L3	73	37	57							
	L4	73	37	57							
	R2(B)-R2(C)		74		98	98	105		135	140	
	R3-R4	73	37	57							
313M	L1				135		150	90			187
	L2		74		98	98	105		135	140	
	L3	73	37	57							
	L4	73	37	57							
	R2(B)-R2(C)		74		98	98	105		135	140	
	R3-R4	73	37	57							
314M	L1										
	L2		74		98	98	105		135	140	
	L3	73	37	57							
	L4	73	37	57							
	R3(B)-R3(C)		74		98	98	105		135	140	
	R4	73	37	57							
315M	L1										
	L2				135		150	90			187
	L3		74		98	98	105		135	140	
	L4	73	37	57							
	R3(B)-R3(C)		74		98	98	105		135	140	
	R4	73	37	57							
316M	L1										
	L2				135		150	90			187
	L3		74		98	98	105		135	140	
	L4	73	37	57							
	R3(B)-R3(C)		74		98	98	105		135	140	
	R4	73	37	57							
317M	L1										
	L2				135		150	90			187
	L3		74		98	98	105		135	140	
	L4	73	37	57							
	R3(B)-R3(C)		74		98	98	105		135	140	
	R4	73	37	57							
318M	L1										
	L2										
	L3				135		150	90			187
	L4		74		98	98	105		135	140	
	R4(B)-R4(C)		74		98	98	105		135	140	
319	L1										
	L2										
	L3				135		150	90			187
	L4		74		98	98	105		135	140	
	R4(B)-R4(C)		74		98	98	105		135	140	
321	L1										
	L2										
	L3				135		150	90			187
	L4		74		98	98	105		135	140	
	R4(B)-R4(C)		74		98	98	105		135	140	

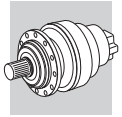

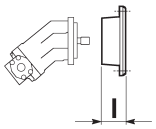

		SAUER DANFOSS (piston)														
		OMF-SMF-OMV -SMV 1-038 16/32 z13	SMF 2/033-052-070 16/32 z21	SMF 2/089 16/32 z23	SMF 2/119 16/32 z27	SMF 2/166-227 16/32 z27	SMF 4/023 90M042 16/32 z13	SMF 4/046 90M042 16/32 z15	90 M055 16/32 z21	90 M075-M100 16/32 z23	90 M130 16/32 z27	51 V 060 12/24 z14	51 V 080 12/24 z14	51 V 110 8/16 z13	51 V 160 8/16 z13	51 V 250 8/16 z15
		S5BA	S5CE	S5CD	S5DC	S5EC	S5BA	S5BM	S5CE	S5CD	S5DC	S5CA	S5CA	S5DA	S5DA	S5ED
	CODE								I							
300	L1-L2-L3-L4	52	64	64	81		52	52	64	64	81	64	64	81	81	
	R2-R3-R4	52	64	64	81		52	52	64	64	81	64	64	81	81	
301	L1-L2-L3-L4	52	64	64	81		52	52	64	64	81	64	64	81	81	
	R2-R3-R4	52	64	64	81		52	52	64	64	81	64	64	81	81	
303	L1	52	64	64	81		52	52	64	64	81	64	64	81	81	
	L2-L3-L4	52	64	64	81		52	52	64	64	81	64	64	81	81	
	R2-R3-R4	52	64	64	81		52	52	64	64	81	64	64	81	81	
304	L1	52	64	64	81		52	52	64	64	81	64	64	81	81	
	L2-L3-L4	52	64	64	81		52	52	64	64	81	64	64	81	81	
	R2-R3-R4	52	64	64	81		52	52	64	64	81	64	64	81	81	
305	L1	52	64	64	81		52	52	64	64	81	64	64	81	81	
	L2-L3-L4	52	64	64	81		52	52	64	64	81	64	64	81	81	
	R2-R3-R4	52	64	64	81		52	52	64	64	81	64	64	81	81	
306	L1				101	113					101			101	101	113
	L2	52	64	64	81		52	52	64	64	81	64	64	81	81	
	L3-L4	52	64	64	81		52	52	64	64	81	64	64	81	81	
	R2-R3-R4	52	64	64	81		52	52	64	64	81	64	64	81	81	
307	L1				101	113					101			101	101	113
	L2	52	64	64	81		52	52	64	64	81	64	64	81	81	
	L3-L4	52	64	64	81		52	52	64	64	81	64	64	81	81	
	R2	52	64	64	81		52	52	64	64	81	64	64	81	81	
	R3-R4	52	64	64	81		52	52	64	64	81	64	64	81	81	
309	L1				101	113					101			101	101	113
	L2	52	64	64	81		52	52	64	64	81	64	64	81	81	
	L3-L4	52	64	64	81		52	52	64	64	81	64	64	81	81	
	R2	52	64	64	81		52	52	64	64	81	64	64	81	81	
	R3-R4	52	64	64	81		52	52	64	64	81	64	64	81	81	
310M	L1				146	158					146			146	146	158
	L2				101	113					101			101	101	113
	L3	52	64	64	81		52	52	64	64	81	64	64	81	81	
	L4	52	64	64	81		52	52	64	64	81	64	64	81	81	
	R2(B)-R2(C)				101	113					101			101	101	113
	R3-R4	52	64	64	81		52	52	64	64	81	64	64	81	81	
311M	L1															
	L2				101	113					101			101	101	113
	L3	52	64	64	81		52	52	64	64	81	64	64	81	81	
	L4	52	64	64	81		52	52	64	64	81	64	64	81	81	
	R2(B)-R2(C)				101	113					101			101	101	113
	R3-R4	52	64	64	81		52	52	64	64	81	64	64	81	81	
313M	L1															
	L2				101	113					101			101	101	113
	L3	52	64	64	81		52	52	64	64	81	64	64	81	81	
	L4	52	64	64	81		52	52	64	64	81	64	64	81	81	
	R2(B)-R2(C)				101	113					101			101	101	113
	R3-R4	52	64	64	81		52	52	64	64	81	64	64	81	81	
314M	L1															
	L2				101	113					101			101	101	113
	L3	52	64	64	81		52	52	64	64	81	64	64	81	81	
	L4	52	64	64	81		52	52	64	64	81	64	64	81	81	
	R3(B)-R3(C)				101	113					101			101	101	113
	R4	52	64	64	81		52	52	64	64	81	64	64	81	81	
315M	L1															
	L2															
	L3				101	113					101			101	101	113
	L4	52	64	64	81		52	52	64	64	81	64	64	81	81	
	R3(B)-R3(C)				101	113					101			101	101	113
	R4	52	64	64	81		52	52	64	64	81	64	64	81	81	
316M	L1															
	L2															
	L3				101	113					101			101	101	113
	L4	52	64	64	81		52	52	64	64	81	64	64	81	81	
	R3(B)-R3(C)				101	113					101			101	101	113
	R4	52	64	64	81		52	52	64	64	81	64	64	81	81	
317M	L1															
	L2															
	L3				101	113					101			101	101	113
	L4	52	64	64	81		52	52	64	64	81	64	64	81	81	
	R3(B)-R3(C)				101	113					101			101	101	113
	R4	52	64	64	81		52	52	64	64	81	64	64	81	81	
318M	L1															
	L2															
	L3															
	L4				101	113					101			101	101	113
	R4(B)-R4(C)				101	113					101			101	101	113
319	L1															
	L2															
	L3															
	L4				101	113					101			101	101	113
	R4(B)-R4(C)				101	113					101			101	101	113
321	L1															
	L2															
	L3															
	L4				101	113					101			101	101	113
	R4(B)-R4(C)				101	113					101			101	101	113

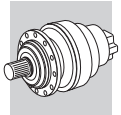

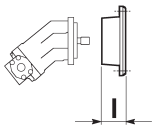

	CODE	TRW-TORQMOTOR (PARKER)					VICKERS (EATON)				WHITE				
		MAG 04-32 SAE 1" 6B	MAF 06-40 SAE 1" 6B	MAB 06-32 SAE 1" 6B	MAB 06-32 SAE A ø25	MAE 10-68 SAE 1" 6B	MFE 19 16/32 z15	25M**A11 16/32 z13	35-45 M**A11 12/24 z14	50 M**A11 8/16 z13	HS 02-15 SAE A ø25	HS 02-15 SAE A 1" 6B	RS 08-24 SAE A ø25	RS 08-24 SAE A 1" 6B	REO 06-45 SAE A 1" 6B
		S5AQ	S5AQ	S5AQ	S5AP	S5AQ	S5BM	S5BA	S5CA	S5DA	S5AP	S5AQ	S5AP	S5AQ	S5AP
		l													
300	L1-L2-L3-L4	42	42	42	42	42	52	52	64	81	42	42	42	42	42
	R2-R3-R4	42	42	42	42	42	52	52	64	81	42	42	42	42	42
301	L1-L2-L3-L4	42	42	42	42	42	52	52	64	81	42	42	42	42	42
	R2-R3-R4	42	42	42	42	42	52	52	64	81	42	42	42	42	42
303	L1	42	42	42	42	42	52	52	64	81	42	42	42	42	42
	L2-L3-L4	42	42	42	42	42	52	52	64	81	42	42	42	42	42
	R2-R3-R4	42	42	42	42	42	52	52	64	81	42	42	42	42	42
304	L1	42	42	42	42	42	52	52	64	81	42	42	42	42	42
	L2-L3-L4	42	42	42	42	42	52	52	64	81	42	42	42	42	42
	R2-R3-R4	42	42	42	42	42	52	52	64	81	42	42	42	42	42
305	L1	42	42	42	42	42	52	52	64	81	42	42	42	42	42
	L2-L3-L4	42	42	42	42	42	52	52	64	81	42	42	42	42	42
	R2-R3-R4	42	42	42	42	42	52	52	64	81	42	42	42	42	42
306	L1									101					
	L2	42	42	42	42	42	52	52	64	81	42	42	42	42	42
	L3-L4	42	42	42	42	42	52	52	64	81	42	42	42	42	42
	R2-R3-R4	42	42	42	42	42	52	52	64	81	42	42	42	42	42
307	L1									101					
	L2	42	42	42	42	42	52	52	64	81	42	42	42	42	42
	L3-L4	42	42	42	42	42	52	52	64	81	42	42	42	42	42
	R2	42	42	42	42	42	52	52	64	81	42	42	42	42	42
	R3-R4	42	42	42	42	42	52	52	64	81	42	42	42	42	42
309	L1									101					
	L2	42	42	42	42	42	52	52	64	81	42	42	42	42	42
	L3-L4	42	42	42	42	42	52	52	64	81	42	42	42	42	42
	R2	42	42	42	42	42	52	52	64	81	42	42	42	42	42
	R3-R4	42	42	42	42	42	52	52	64	81	42	42	42	42	42
310M	L1									146					
	L2									101					
	L3	42	42	42	42	42	52	52	64	81	42	42	42	42	42
	L4	42	42	42	42	42	52	52	64	81	42	42	42	42	42
	R2(B)-R2(C)									101					
	R3-R4	42	42	42	42	42	52	52	64	81	42	42	42	42	42
311M	L1														
	L2									101					
	L3	42	42	42	42	42	52	52	64	81	42	42	42	42	42
	L4	42	42	42	42	42	52	52	64	81	42	42	42	42	42
	R2(B)-R2(C)									101					
	R3-R4	42	42	42	42	42	52	52	64	81	42	42	42	42	42
313M	L1														
	L2									101					
	L3	42	42	42	42	42	52	52	64	81	42	42	42	42	42
	L4	42	42	42	42	42	52	52	64	81	42	42	42	42	42
	R2(B)-R2(C)									101					
	R3-R4	42	42	42	42	42	52	52	64	81	42	42	42	42	42
314M	L1														
	L2									101					
	L3	42	42	42	42	42	52	52	64	81	42	42	42	42	42
	L4	42	42	42	42	42	52	52	64	81	42	42	42	42	42
	R3(B)-R3(C)									101					
	R4	42	42	42	42	42	52	52	64	81	42	42	42	42	42
315M	L1														
	L2														
	L3									101					
	L4	42	42	42	42	42	52	52	64	81	42	42	42	42	42
	R3(B)-R3(C)									101					
	R4	42	42	42	42	42	52	52	64	81	42	42	42	42	42
316M	L1														
	L2														
	L3									101					
	L4	42	42	42	42	42	52	52	64	81	42	42	42	42	42
	R3(B)-R3(C)									101					
	R4	42	42	42	42	42	52	52	64	81	42	42	42	42	42
317M	L1														
	L2														
	L3									101					
	L4	42	42	42	42	42	52	52	64	81	42	42	42	42	42
	R3(B)-R3(C)									101					
	R4	42	42	42	42	42	52	52	64	81	42	42	42	42	42
318M	L1														
	L2														
	L3														
	L4									101					
	R4(B)-R4(C)									101					
319	L1														
	L2														
	L3														
	L4									101					
	R4(B)-R4(C)									101					
321	L1														
	L2														
	L3														
	L4									101					
	R4(B)-R4(C)									101					

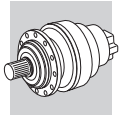

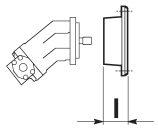

		VOAC (PARKER)																
		F11-5 CK ø18	F11-10 CK ø20	F11-19 CK ø25	F11-19 CD 25x1,25 z18	F12-30 MF*I*D 30x2 z14	F12-40 MF*I*D 32x2 z14	F12-60 MF*I*D 35x2 z16	F12-80 MF*I*D 40x2 z18	F12-110 MF*I*D 45x2 z21	F11-150/250 S*S 8/16 z13	V12 060 I*D 35x2 z16	V12 060 S*S 12/24 z14	V12 080 N*D 40x2 z18	V12 080 S*S 12/24 z14	V12 110 I*D 45x2 z21	V12 110 S*S 8/16 z13	V12 160 S*S 8/16 z13	V12 160 N*C 45x2 z21
		V0AA	V0AC	V0AE	V0AG	H0AE	H0AI	H0BC	H0BG	H0CA	S5DA	H0BC	S5CA	H0BG	S5CA	H0CA	S5DA	S5DA	H0CG
	CODE	I																	
300	L1-L2-L3-L4	64	52	53	53	52	64	64	75	101	81	64	64	75	64	101	81	81	101
	R2-R3-R4	64	52	53	53	52	64	64	75	101	81	64	64	75	64	101	81	81	101
301	L1-L2-L3-L4	64	52	53	53	52	64	64	75	101	81	64	64	75	64	101	81	81	101
	R2-R3-R4	64	52	53	53	52	64	64	75	101	81	64	64	75	64	101	81	81	101
303	L1	64	52	53	53	52	64	64	75	101	81	64	64	75	64	101	81	81	101
	L2-L3-L4	64	52	53	53	52	64	64	75	101	81	64	64	75	64	101	81	81	101
	R2-R3-R4	64	52	53	53	52	64	64	75	101	81	64	64	75	64	101	81	81	101
304	L1	64	52	53	53	52	64	64	75	101	81	64	64	75	64	101	81	81	101
	L2-L3-L4	64	52	53	53	52	64	64	75	101	81	64	64	75	64	101	81	81	101
	R2-R3-R4	64	52	53	53	52	64	64	75	101	81	64	64	75	64	101	81	81	101
305	L1	64	52	53	53	52	64	64	75	101	81	64	64	75	64	101	81	81	101
	L2-L3-L4	64	52	53	53	52	64	64	75	101	81	64	64	75	64	101	81	81	101
	R2-R3-R4	64	52	53	53	52	64	64	75	101	81	64	64	75	64	101	81	81	101
306	L1										101						101	101	
	L2	64	52	53	53	52	64	64	75	101	81	64	64	75	64	101	81	81	101
	L3-L4	64	52	53	53	52	64	64	75	101	81	64	64	75	64	101	81	81	101
	R2-R3-R4	64	52	53	53	52	64	64	75	101	81	64	64	75	64	101	81	81	101
307	L1										101						101	101	
	L2	64	52	53	53	52	64	64	75	101	81	64	64	75	64	101	81	81	101
	L3-L4	64	52	53	53	52	64	64	75	101	81	64	64	75	64	101	81	81	101
	R2	64	52	53	53	52	64	64	75	101	81	64	64	75	64	101	81	81	101
	R3-R4	64	52	53	53	52	64	64	75	101	81	64	64	75	64	101	81	81	101
309	L1										101						101	101	
	L2	64	52	53	53	52	64	64	75	101	81	64	64	75	64	101	81	81	101
	L3-L4	64	52	53	53	52	64	64	75	101	81	64	64	75	64	101	81	81	101
	R2	64	52	53	53	52	64	64	75	101	81	64	64	75	64	101	81	81	101
	R3-R4	64	52	53	53	52	64	64	75	101	81	64	64	75	64	101	81	81	101
310M	L1										146						146	146	
	L2										101						101	101	
	L3	64	52	53	53	52	64	64	75	101	81	64	64	75	64	101	81	81	101
	L4	64	52	53	53	52	64	64	75	101	81	64	64	75	64	101	81	81	101
	R2(B)-R2(C)										101						101	101	
	R3-R4	64	52	53	53	52	64	64	75	101	81	64	64	75	64	101	81	81	101
311M	L1																		
	L2										101						101	101	
	L3	64	52	53	53	52	64	64	75	101	81	64	64	75	64	101	81	81	101
	L4	64	52	53	53	52	64	64	75	101	81	64	64	75	64	101	81	81	101
	R2(B)-R2(C)										101						101	101	
	R3-R4	64	52	53	53	52	64	64	75	101	81	64	64	75	64	101	81	81	101
313M	L1																		
	L2										101						101	101	
	L3	64	52	53	53	52	64	64	75	101	81	64	64	75	64	101	81	81	101
	L4	64	52	53	53	52	64	64	75	101	81	64	64	75	64	101	81	81	101
	R2(B)-R2(C)										101						101	101	
	R3-R4	64	52	53	53	52	64	64	75	101	81	64	64	75	64	101	81	81	101
314M	L1																		
	L2										101						101	101	
	L3	64	52	53	53	52	64	64	75	101	81	64	64	75	64	101	81	81	101
	L4	64	52	53	53	52	64	64	75	101	81	64	64	75	64	101	81	81	101
	R3(B)-R3(C)										101						101	101	
	R4	64	52	53	53	52	64	64	75	101	81	64	64	75	64	101	81	81	101
315M	L1																		
	L2																		
	L3										101						101	101	
	L4	64	52	53	53	52	64	64	75	101	81	64	64	75	64	101	81	81	101
	R3(B)-R3(C)										101						101	101	
	R4	64	52	53	53	52	64	64	75	101	81	64	64	75	64	101	81	81	101
316M	L1																		
	L2																		
	L3										101						101	101	
	L4	64	52	53	53	52	64	64	75	101	81	64	64	75	64	101	81	81	101
	R3(B)-R3(C)										101						101	101	
	R4	64	52	53	53	52	64	64	75	101	81	64	64	75	64	101	81	81	101
317M	L1																		
	L2																		
	L3										101						101	101	
	L4	64	52	53	53	52	64	64	75	101	81	64	64	75	64	101	81	81	101
	R3(B)-R3(C)										101						101	101	
	R4	64	52	53	53	52	64	64	75	101	81	64	64	75	64	101	81	81	101
318M	L1																		
	L2																		
	L3																		
	L4										101						101	101	
	R4(B)-R4(C)										101						101	101	
319	L1																		
	L2																		
	L3																		
	L4										101						101	101	
	R4(B)-R4(C)										101						101	101	
321	L1																		
	L2																		
	L3																		
	L4										101						101	101	
	R4(B)-R4(C)										101						101	101	

H4 MOTORI IDRAULICI

PRESENTAZIONE

I riduttori serie 300M sono fornibili completi di motori idraulici MG prodotti dalla BONFIGLIOLI TRASMITAL. Le forme e dimensioni di tali motori sono definiti per ottenere la massima integrazione con il riduttore ottenendo cosi motoriduttori con ottime caratteristiche di compattezza ed economicità.
In caso di ordine occorre contattare il Servizio Tecnico Bonfiglioli.

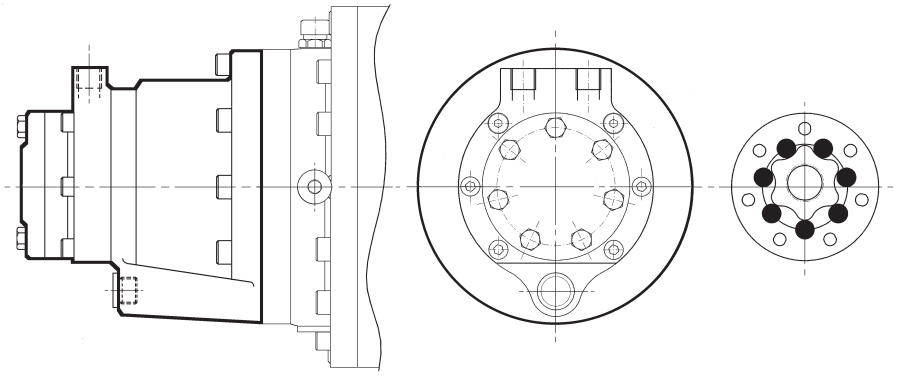

H4.1 Motori idraulici MG

Caratteristiche costruttive:

- Sistema orbitale, con rulli fra rotore e statore GEROLER®
- Distributore sull'albero d'uscita
- Cilindrate da 50 a 250 cm^3
- Pressione max 175 bar
- Portata max 48 lt/min
- Rendimenti elevati
- Possibilità di avere il freno idraulico nella stessa dimensione d'ingombro
- Comando freno interno direttamente dal motore, senza la necessità di valvole e circuiti esterni.

H5 CARATTERISTICHE TECNICHE

H5.1 Cilindrata V [cm^3]

È il volume geometrico generato ad ogni giro, corrispondente al volume teorico di olio idraulico necessario per fare ruotare l'albero motore di un giro.

H5.2 Pressione p [bar]

È la pressione idraulica a cui viene sottoposto il motore nel suo funzionamento.

H5.3 Portata Q [l / min]

È il flusso di olio idraulico che attraversa il motore nel suo funzionamento.

H5.4 Rendimento totale η_t

È il rendimento totale del motore idraulico dato dal prodotto:

$$\eta_t = \eta mh \times \eta v \qquad (38)$$

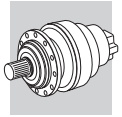

H5.5 Rendimento meccanico-idraulico ηmh

Rappresenta il rapporto fra coppia effettiva e coppia teorica all'albero motore.
Dipende dalle perdite interne dovute ad attriti meccanici e perdite di pressione del fluido idraulico, è dato dalla formula:

$$\eta mh = \frac{2\pi \times 10 \times M}{(pA - pB) \times V} \qquad (39)$$

H5.6 Rendimento volumetrico ηv

Rappresenta il rapporto fra velocità effettiva e velocità teorica del motore.
Dipende dal trafilamento interno del motore fra i volumi in alta e bassa pressione, è dato dalla formula:

$$\eta v = \frac{n \times V}{Q \times 1000} \qquad (40)$$

H5.7 Velocità angolare n [min^{-1}]

È la velocità di rotazione del motore idraulico, è dato dalla formula:

$$n = \frac{Q \times 1000}{V} \times \eta v \qquad (41)$$

H5.8 Coppia M [Nm]

È la coppia effettiva che riesce a trasmettere il motore idraulico, è data dalla formula:

$$M = \frac{(p\,A - p\,B) \times V}{2\pi \times 10} \times \eta mh \qquad (42)$$

H6 DESIGNAZIONE

MG 050 SD_R P010

ATTACCHI

P010 = porte di alimentazione direttamente sul corpo motore — Con freno

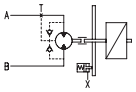

Senza freno

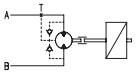

B02P = porte di alimentazione con valvola selettrice comando freno — Con freno

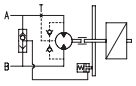

SERIE COSTRUTTIVA

CILINDRATA

050	51.60	cm^3	**160**	159.60	cm^3
080	80.30	cm^3	**200**	199.80	cm^3
100	99.80	cm^3	**250**	249.30	cm^3
125	125.70	cm^3			

MOTORE ORBITALE TIPO MG

H7 SCELTA

La cilindrata V del motore idraulico deve essere scelta insieme al riduttore.

Nota la coppia di uscita da trasmettere dal riduttore M_{r2} e la sua velocità n_2 si procede come segue:

Fissare il valore della pressione di comando del motore pA-pB ≤ 175 bar.

Calcolare il valore della cilindrata equivalente Veq del motoriduttore con la formula:

$$Veq = \frac{2\pi \times 10 \times M_{r2}}{(pA - pB) \times \eta mh \times \eta d} \quad [cm^3] \qquad (43)$$

dove per ηmh fissare inizialmente 0,85;
η_d: rendimento dinamico riduttore fissare 0.94.

Calcolare il valore della portata Q necessaria per alimentare il motore idraulico con la formula:

$$Q = \frac{n_2 \times Veq}{1000 \times \eta v} \quad [l/min] \qquad (44)$$

dove per ηv fissare inizialmente 0,90.

− In base alle prestazioni richieste M_{r2} ed n_2 scegliere la grandezza del riduttore.

− Entrare nel diagramma (A23) del motoriduttore con il valore di cilindrata equivalente Veq e scegliere contemporaneamente:
- il motore che soddisfi le condizioni di p int e Q richieste.
- Il valore indicativo di i, tenendo presente che questo venga ottenuto con il minimo numero di stadi di riduzione, così da ottenere un motoriduttore con il costo più basso e con dimensioni compatte.

Con il valore di M_2 ed il valore indicativo di i, procedere alla selezione ed alla verifica del riduttore secondo quanto indicato nel cap. 14.5.

H8 VERIFICHE

Verificare poi che i valori di pressione, portata, rendimenti trovino corrispondenza con quelli riportati sulla Tab. (A24 e A25) dei dati tecnici motori.

(A 23)

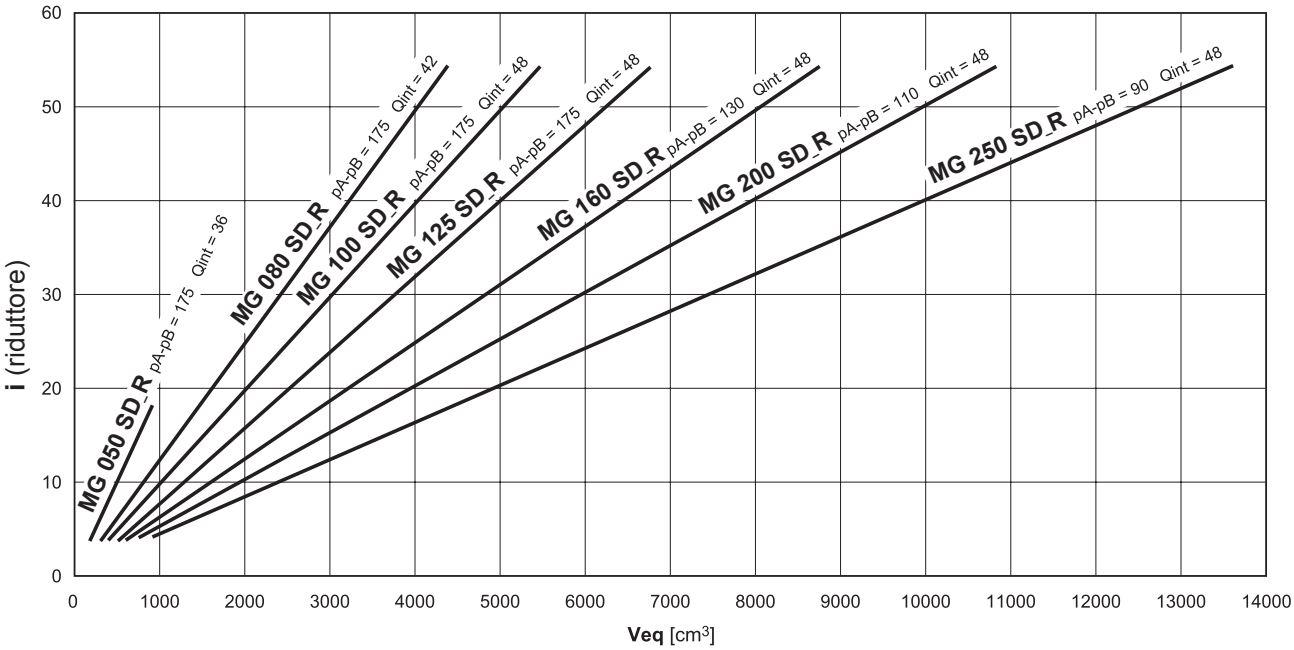
i (riduttore)
Veq [cm3]
MG 050 SD_R pA-pB = 175 Qint = 36
MG 080 SD_R pA-pB = 175 Qint = 42
MG 100 SD_R pA-pB = 175 Qint = 48
MG 125 SD_R pA-pB = 175 Qint = 48
MG 160 SD_R pA-pB = 130 Qint = 48
MG 200 SD_R pA-pB = 110 Qint = 48
MG 250 SD_R pA-pB = 90 Qint = 48

(A 24)

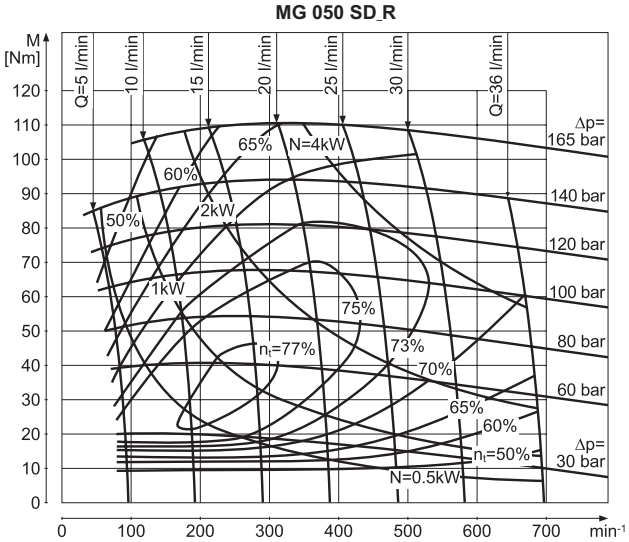
MG 050 SD_R
M [Nm]
Q=5 l/min
10 l/min
15 l/min
20 l/min
25 l/min
30 l/min
Q=36 l/min
Δp= 165 bar
140 bar
120 bar
100 bar
80 bar
60 bar
Δp= 30 bar
N=4kW
2kW
1kW
N=0.5kW
ηt=77%
ηt=50%
min-1

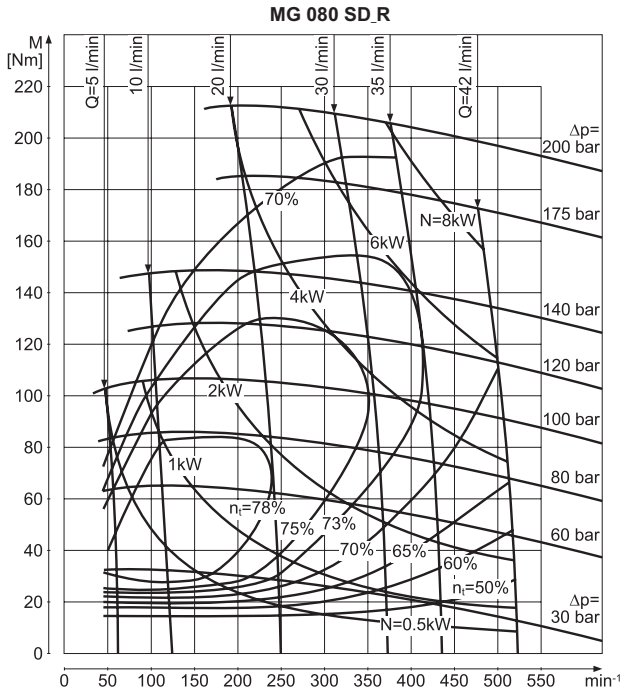
MG 080 SD_R
M [Nm]
Q=5 l/min
10 l/min
20 l/min
30 l/min
35 l/min
Q=42 l/min
Δp= 200 bar
175 bar
140 bar
120 bar
100 bar
80 bar
60 bar
Δp= 30 bar
N=8kW
6kW
4kW
2kW
1kW
N=0.5kW
ηt=78%
ηt=50%
min-1

(A 25)

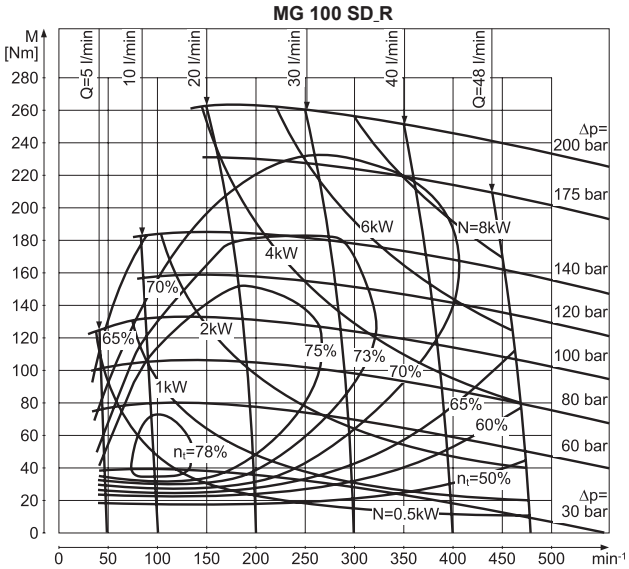
MG 100 SD_R
M [Nm]
Q=5 l/min
10 l/min
20 l/min
30 l/min
40 l/min
Q=48 l/min
Δp= 200 bar
175 bar
140 bar
120 bar
100 bar
80 bar
60 bar
Δp= 30 bar
N=8kW
6kW
4kW
2kW
1kW
N=0.5kW
70%
65%
75%
73%
60%
nt=78%
nt=50%
min-1

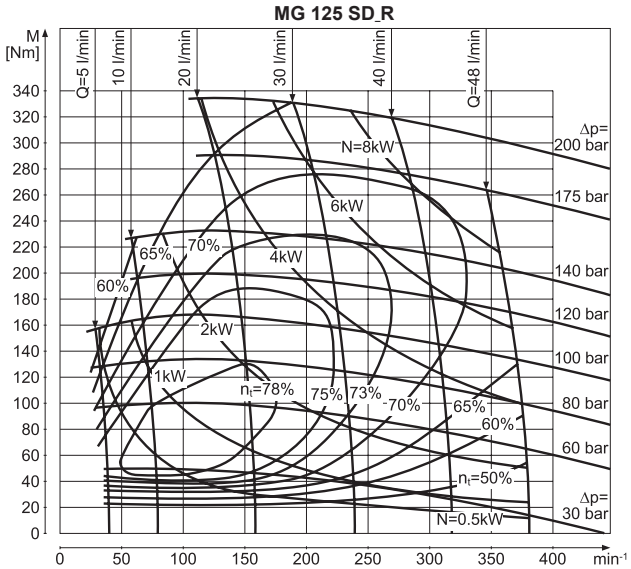
MG 125 SD_R
M [Nm]
Q=5 l/min
10 l/min
20 l/min
30 l/min
40 l/min
Q=48 l/min
Δp= 200 bar
175 bar
140 bar
120 bar
100 bar
80 bar
60 bar
Δp= 30 bar
N=8kW
6kW
4kW
2kW
1kW
N=0.5kW
70%
65%
60%
75%
73%
nt=78%
nt=50%
min-1

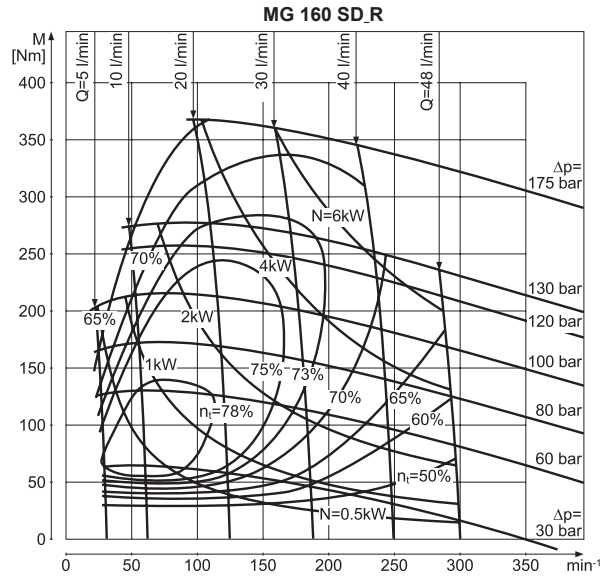
MG 160 SD_R
M [Nm]
Q=5 l/min
10 l/min
20 l/min
30 l/min
40 l/min
Q=48 l/min
Δp= 175 bar
130 bar
120 bar
100 bar
80 bar
60 bar
Δp= 30 bar
N=6kW
4kW
2kW
1kW
N=0.5kW
70%
65%
75%
73%
60%
nt=78%
nt=50%
min-1

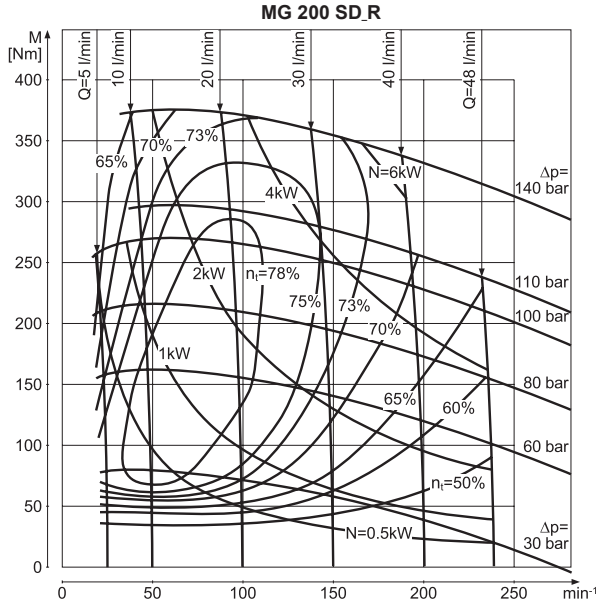
MG 200 SD_R
M [Nm]
Q=5 l/min
10 l/min
20 l/min
30 l/min
40 l/min
Q=48 l/min
Δp= 140 bar
110 bar
100 bar
80 bar
60 bar
Δp= 30 bar
N=6kW
4kW
2kW
1kW
N=0.5kW
73%
70%
65%
75%
60%
nt=78%
nt=50%
min-1

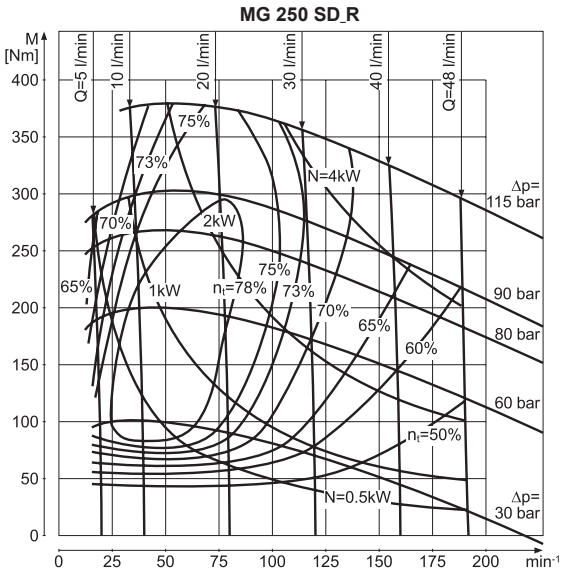
MG 250 SD_R
M [Nm]
Q=5 l/min
10 l/min
20 l/min
30 l/min
40 l/min
Q=48 l/min
Δp= 115 bar
90 bar
80 bar
60 bar
Δp= 30 bar
N=4kW
2kW
1kW
N=0.5kW
75%
73%
70%
65%
60%
nt=78%
nt=50%
min-1

MG-**P010

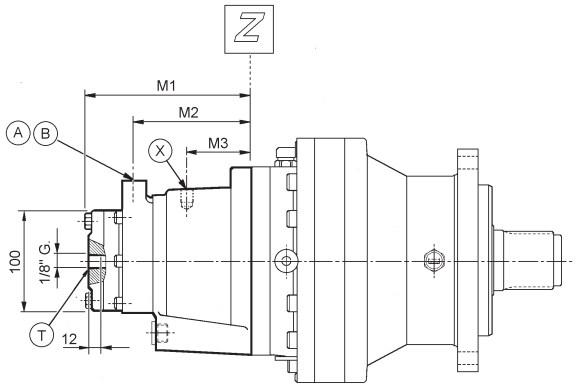

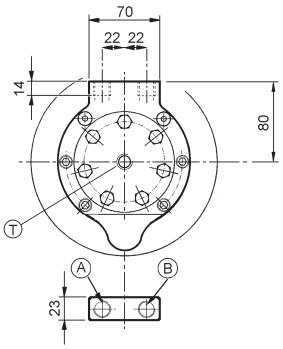

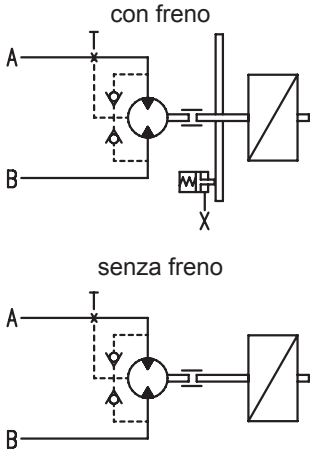

ATTACCHI

A - B = 3/8” G 19TPI
T = 1/8” G 28TPI
X = 1/4 G 19TPI

MG-**B02P

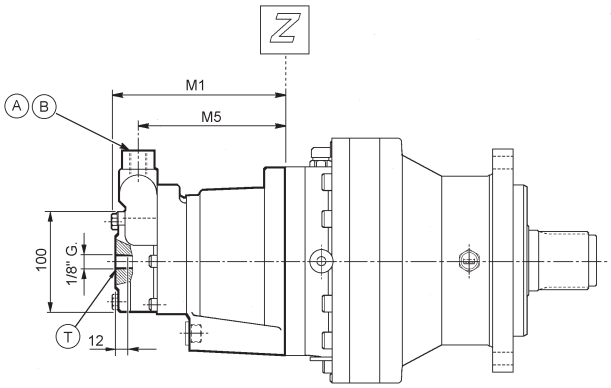

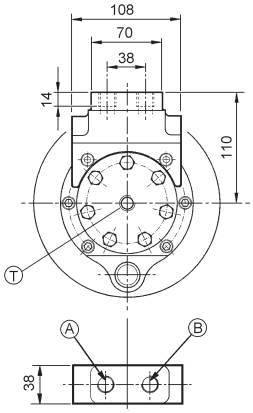

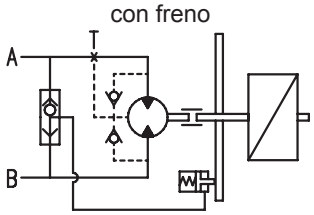

(A 26)

Riduttore applicabile	Motore							Esecuzione		
	MG 050	**MG 080**	**MG 100**	**MG 125**	**MG 160**	**MG 200**	**MG 250**	**P010**		**B02P**
	M1							M2	M3	M5
300 L1 - L2 - R2	162	167	171	175	181			113	60	143
301 L1 - L2 - R2	162	167	171	175	181	188	197	113	60	143
303 L1					203	210	219	135	77	165
303 L2 - R2	162	167	171	175	181	188	197	113	60	143
304 L1				197	203	210	219	135	77	165
304 L2 - R2	162	167	171	175	181	188	197	113	60	143
305 L1					203	210	219	135	77	165
305 L2 - R2	162	167	171	175	181	188	197	113	60	143
306 L2					203	210	219	135	77	165
306 R2 - R3	162	167	171	175	181	188	197	113	60	143
307 L2					203	210	219	135	77	165
307 R2 - R3	162	167	171	175	181	188	197	113	60	143

H11 DATI TECNICI FRENI PER MOTORI MG

(A 27)

	Freno TYPE 3				Freno TYPE 4			
	3E	**3I**	**3L**	**3N**	**4K**	**4N**	**4R**	**4U**
Coppia frenante Mf [Nm]	120	200	280	350	260	320	430	620
Pressione minima apertura [bar]	16	28	28	35	25	30	24	34
Pressione massima di comando [bar]	200							
Volume d'olio per comando apertura freno [cc]	6.43	6.43	6.43	6.43	6.65	6.65	6.65	6.65

(A 28)

Riduttore applicabile	Motore													
	MG 050		**MG 080**		**MG 100**		**MG 125**		**MG 160**		**MG 200**		**MG 250**	
	Mf [Nm]		Mf [Nm]		Mf [Nm]		Mf [Nm]		Mf [Nm]		Mf [Nm]		Mf [Nm]	
300 L1 - L2	120	**3E**	200	**3I**	280	**3L**	350	**3N**	350	**3N**				
300 R2	120	**3E**	200	**3I**	280	**3L**								
301 L1 - L2			200	**3I**	280	**3L**	350	**3N**	350	**3N**	350	**3N**	350	**3N**
301 R2	120	**3E**	200	**3I**	280	**3L**	350	**3N**	350	**3N**				
303 L1									430	**4R**	430	**4R**	430	**4R**
303 L2	120	**3E**	200	**3I**	280	**3L**	350	**3N**	350	**3N**	350	**3N**		
303 R2	120	**3E**	200	**3I**	280	**3L**	350	**3N**	350	**3N**	350	**3N**		
304 L1							350	**3N**	430	**4R**	430	**4R**	430	**4R**
304 L2	120	**3E**	200	**3I**	280	**3L**	350	**3N**	350	**3N**	350	**3N**		
304 R2	120	**3E**	200	**3I**	280	**3L**	350	**3N**	350	**3N**	350	**3N**		
305 L1									430	**4R**	430	**4R**	430	**4R**
305 L2	120	**3E**	200	**3I**	280	**3L**	350	**3N**	350	**3N**	350	**3N**		
305 R2	120	**3E**	200	**3I**	280	**3L**	350	**3N**	350	**3N**	350	**3N**		
306 L2			260	**4K**	260	**4K**	430	**4R**	430	**4R**	430	**4R**	430	**4R**
306 R2 - R3			200	**3I**	280	**3L**	350	**3N**	350	**3N**	350	**3N**		
307 L2					260	**4K**	430	**4R**	430	**4R**	430	**4R**	430	**4R**
307 R2 - R3			200	**3I**	280	**3L**	350	**3N**	350	**3N**	350	**3N**	350	**3N**

H12 INSTALLAZIONE

In aggiunta alle norme relative alla installazione del riduttore, vedi il capitolo 15, è raccomandato seguire le seguenti norme per l'installazione del motore idraulico.

a) Collegamento al circuito idraulico

I motori possono essere collegati sia a circuiti del tipo chiuso che aperto.
Nel caso di circuito aperto la elettrovalvola o distributore di comando può essere sia di tipo a centro chiuso che aperto.

Occorre che nel ramo del circuito corrispondente alla mandata del motore idraulico sia sempre montata una valvola di massima pressione tarata ad un valore non superiore al valore p_{int} ammesso sul motore idraulico. Vedi schemi idraulici (A29).

(A 29)

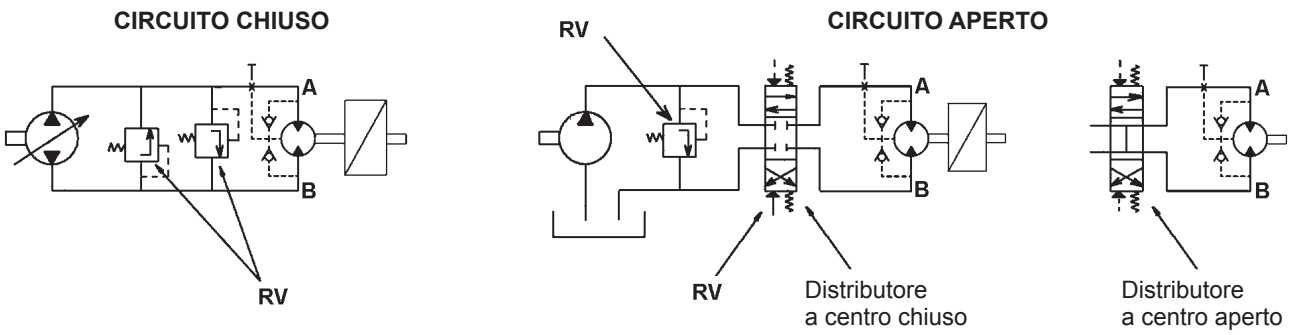

RV = valvole di massima pressione
tarate a pRV< pmax

Nel caso in cui questo non sia possibile in quanto il circuito deve comandare altri azionamenti a pressione più elevata e/o nel caso cui si abbia un distributore a centro chiuso ed il motore aziona organi ad elevato momento d'inerzia occorre montare valvole di massima pressione secondarie il più vicino possibile al motore. Vedi schema (A30).

(A 30)

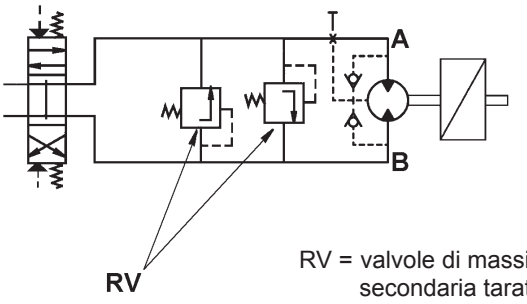

RV = valvole di massima pressione
secondaria tarate a pRV< pmax

b) Collegamento foro di drenaggio T

I motori sono sempre provvisti di foro di drenaggio da 1/8" G, posto al centro del coperchio e chiuso con tappo metallico (vedi figura sotto).
Nel motore sono incorporate una coppia di valvole unidirezionali interne; queste rendono la pressione in carcassa del motore sempre uguale al ramo di bassa pressione A o B, quando il drenaggio non è collegato al serbatoio

(A 31)

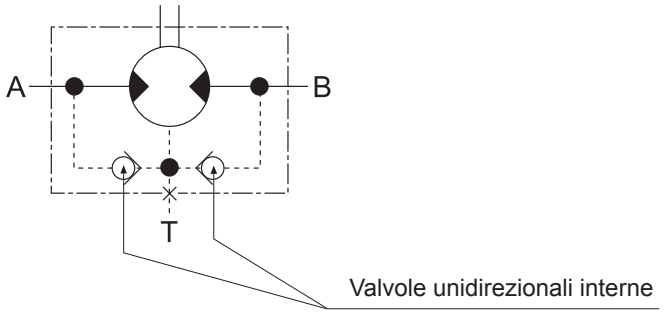

1) in caso di drenaggio collegato, la pressione sulla guarnizione di tenuta dell'albero uguaglia quella presente sulla tubazione di drenaggio.

2) in caso di drenaggio chiuso, la pressione sulla guarnizione di tenuta dell'albero non supererà mai la pressione presente sulla linea di ritorno.

I valori massimi della pressione sulla linea del drenaggio (caso 1) o sulla linea di ritorno (caso 2) sono definiti dal seguente grafico (per condizioni continue ed intermittenti).

(A 32)

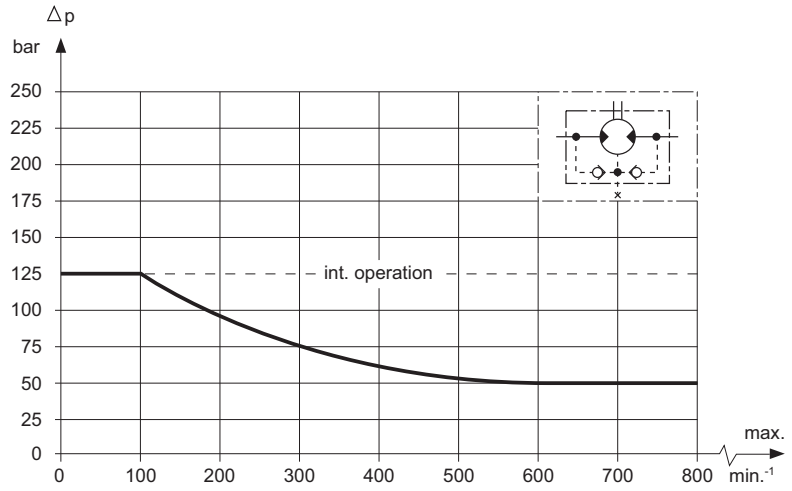

Il drenaggio deve essere sempre collegato quando i motori sono in serie.

c) Comando freno

Nel caso in cui il motoriduttore sia dotato di freno, il motore può essere in due esecuzioni: B02P oppure P010. Nella esecuzione B02P, il comando del freno è interno, diretto dal motore. Nella esecuzione P010, occorre un ramo ausiliario per il comando del freno. Vedere lo schema seguente.

(A 33)

CIRCUITO APERTO — Distributore a centro aperto

Esecuzione motore **B02P**

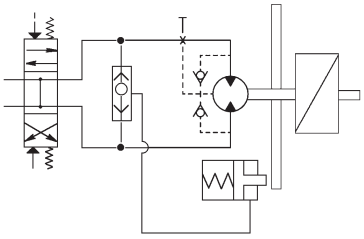

CIRCUITO APERTO — Distributore a centro chiuso

Esecuzione motore **P010**

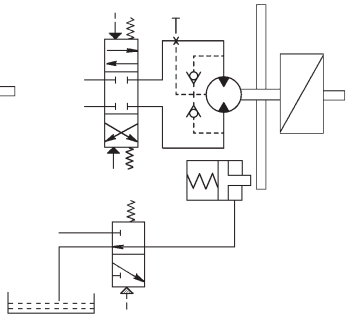

CIRCUITO CHIUSO

Esecuzione motore **P010**

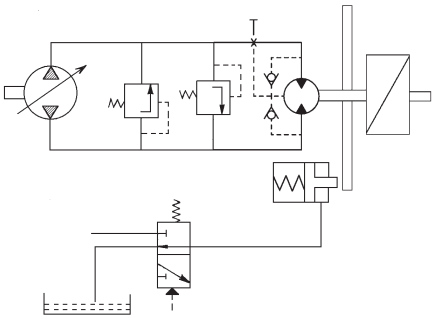

d) Tipo olio idraulico

È raccomandato l'uso di olio idraulico minerale con viscosità ISO VG 46 (46 Cst a t = 40°C).
È raccomandabile che la temperatura dell'olio sia compresa fra +30 °C e + 70 °C.

e) Filtraggio

Per assicurare un funzionamento affidabile del motore ed una sua durata è estremamente importante che il circuito idraulico sia dotato di filtro con capacità filtrante tale da assicurare un grado di pulizia dell'olio secondo grado:

grado 9 NAS 1638
grado 6 SAE
grado 18/15 SO DIS 4406

A1 SCOPO DEL DOCUMENTO

Questo Bollettino Tecnico è lo strumento attraverso il quale condurre la selezione di riduttori epicicloidali della serie 300M destinati all'installazione in zone a rischio di esplosione, classificate secondo i criteri specificati dalla Direttiva 1999/92/CE.

Il Bollettino Tecnico è da considerarsi parte integrante del catalogo della serie 300M, e successive revisioni, ed ha lo scopo di:
• Descrivere le **caratteristiche costruttive** dei riduttori conformi alla direttiva 2014/34/UE, laddove queste si differenziano da quelle dei riduttori in esecuzione standard - Vedi paragrafo A4.2.
• Specificare i **criteri di selezione** approvati dal costruttore perchè i suddetti riduttori operino mantenendo i requisiti minimi di sicurezza richiesti dalla direttiva 2014/34/UE – Vedi paragrafo A4.4.

A2 INTRODUZIONE ALLE DIRETTIVE ATEX

Ai fini della direttiva 2014/34/UE si intende per **atmosfera esplosiva** quella costituita da una miscela:
a) di **sostanze infiammabili** allo stato di gas, vapori, nebbia e polveri;
b) con **aria;**
c) in determinate **condizioni atmosferiche**;
d) in cui, dopo l'innesco, la combustione si propaga all'insieme della miscela non bruciata (occorre notare che in presenza di polvere, non sempre l'intera quantità di polvere viene consumata dalla combustione).
Un'atmosfera suscettibile di trasformarsi in atmosfera esplosiva a causa delle condizioni locali e/o operative è definita **atmosfera potenzialmente esplosiva**. E' solo a questo tipo di atmosfera potenzialmente esplosiva che sono destinati i prodotti oggetto della direttiva 2014/34/UE.

Norme europee armonizzate ATEX
L'Unione Europea ha emanato due direttive guida di armonizzazione nel campo della salute e della sicurezza. La direttiva 2014/34/UE descrive i requisiti minimi di sicurezza per i prodotti destinati all'uso in zone a rischio di esplosione, all'interno dei paesi dell'Unione Europea. La direttiva assegna inoltre questi apparecchi a **categorie**, definite dalla direttiva stessa. La direttiva 1999/92/CE riporta i requisiti minimi in riferimento alla salute e alla sicurezza dell'ambiente di lavoro, delle condizioni di lavoro, del maneggio di prodotti e sostanze in ambienti a rischio di esplosione. La direttiva inoltre divide gli ambienti di lavoro in **zone** e stabilisce i criteri per l'applicabilità delle **categorie** di prodotto nelle zone stesse. Segue uno schema descrittivo delle **zone** in cui il conduttore di un impianto caratterizzato dalla presenza di atmosfera potenzialmente esplosiva deve suddividere le aree di applicazione delle apparecchiature.

Zone		Frequenza della formazione di atmosfera potenzialmente esplosiva	Tipo di pericolo
Atmosfera gassosa G	Atmosfera polverosa D		
0	20	Presenza costante o per lunghi periodi	Permanente
1	21	Occasionale in funzionamento normale	Potenziale
2	22	Molto rara e/o di breve durata in funzionamento normale	Minimo

BONFIGLIOLI TECHNICAL SERVICE

I riduttori di produzione BONFIGLIOLI RIDUTTORI selezionati dal presente catalogo sono idonei per installazione nelle zone 1, 21, evidenziate in grigio chiaro nello schema soprastante, 2 e 22 solo su richiesta contattando il nostro Servizio Tecnico Commerciale, evidenziate in grigio scuro nello schema soprastante.
A partire dal 1 Luglio 2003 le direttive ATEX si applicano su tutto il territorio dell'Unione Europea sostituendo le leggi divergenti attualmente in vigore a livello nazionale ed europeo in materia di atmosfera esplosiva.
Le direttive si applicano agli apparecchi di natura meccanica, idraulica e pneumatica.

Livelli di protezione per le varie categorie di apparecchi
Le varie categorie di apparecchi devono essere in grado di funzionare conformemente ai parametri operativi stabiliti dal fabbricante, a determinati livelli di protezione.

Livello di protezione	Categoria		Tipo di protezione	Condizioni di funzionamento
	Gruppo I	Gruppo II		
Molto elevato	M1		Due mezzi di protezione indipendenti o sicurezza garantita anche qualora si manifestino due guasti indipendenti uno dall'altro	Gli apparecchi restano alimentati e in funzione anche in presenza di atmosfera esplosiva
Molto elevato		1	Due mezzi di protezione indipendenti o sicurezza garantita anche qualora si manifestino due guasti indipendenti uno dall'altro	Gli apparecchi restano alimentati e in funzione nelle zone 0, 1, 2 (G) e/o nelle zone 20, 21, 22 (D)
Elevato	M2		Protezione adatta al funzionamento normale e a condizioni di funzionamento gravose	Agli apparecchi viene interrotta l'alimentazione in presenza di atmosfera potenzialmente esplosiva
Elevato		2	Protezione adatta al funzionamento normale e a disturbi frequenti o apparecchi in cui si tenga normalmente conto dei guasti	Gli apparecchi restano alimentati e in funzione nelle zone 1, 2 (G) e/o nelle zone 21, 22 (D)
Normale		3	Protezione adatta al funzionamento norale	Gli apparecchi restano alimentati e in funzione nelle zone 2 (G) e/o 22 (D)

BONFIGLIOLI TECHNICAL SERVICE

Definizione dei gruppi (EN 1127-1)
Gruppo I Comprende gli apparecchi destinati a essere utilizzati nei lavori in sotterraneo nelle miniere e nei loro impianti di superficie, esposti al rischio di sprigionamento di grisù e/o polveri combustibili.
Gruppo II Comprende gli apparecchi destinati a essere utilizzati in altri ambienti in cui vi sono probabilità che si manifestino atmosfere esplosive.

Le aree in colore grigio evidenziano le sole categorie per le quali sono disponibili riduttori di produzione BONFIGLIOLI RIDUTTORI. E' pertanto esclusa qualunque installazione di apparecchi BONFIGLIOLI RIDUTTORI in applicazioni minerarie, classificabili come **gruppo I**.
In sintesi, l'insieme di classificazioni degli apparecchi in gruppi, categorie e zone può essere rappresentato dallo schema seguente, nel quale la disponibilità di prodotti BONFIGLIOLI RIDUTTORI è ancora evidenziata dalle celle in colore grigio.

Gruppo	I miniere, grisù		II altre aree potenzialmente esplosive per presenza di gas o polveri					
Categoria	M1	M2	1		2		3	
Atmosfera(1)			G	D	G	D	G	D
Zona			0	20	1	21	2	22
Tipo di protezione riduttore(2)					c, k	c, k	c, k	c, k

BONFIGLIOLI TECHNICAL SERVICE

(1) **G** = gas **D** = polvere
(2) secondo EN13463

A3 USO, INSTALLAZIONE E MANUTENZIONE

Le prescrizioni relative allo stoccaggio, la movimentazione e l'uso sicuro del prodotto sono specificate nel Manuale di installazione, uso e manutenzione.
Il documento dovrà essere conservato in luogo idoneo, in prossimità dell'installazione del riduttore, per il riferimento di tutto il personale che è autorizzato ad interagire con il prodotto per tutto l'arco della vita dello stesso.

Il costruttore si riserva la facoltà di apportare modifiche, integrazioni o miglioramenti al Manuale, nell'interesse stesso dell'utilizzatore.

A4 SPECIFICITÀ DEI RIDUTTORI SERIE 300M CONFORMI ALLA DIRETTIVA ATEX

A4.1 ARTICOLAZIONE DEL PRODOTTO

Grandezze: da 300 a 325.

	3...L		3...R		3/V	
Configurazione	300...309, 310M...318M, 319	L 1	-	- -	-	- -
	300...309, 310M...318M, 319...321	L 2	300...306	R 2	-	- -
	300...309, 310M...318M, 319...321	L 3	300...309, 310M...317M	R 3	300...306	L 3
	300...309, 310M...318M, 319...325	L 4	300...309, 310M...318M, 319...321	R 4	-	- -

Versioni	Piedi		Flangia			Pendolare			Agitatore (verticale)
	PC	PZ	MC/HC	MZ/HZ	FZ	FP	FDK	FZP	VK

Ingressi			
	P(IEC)	V_	Predisposizione motore idraulico
			Freno idraulico negativo a dischi multipli standard **6** = Grandezza: **4, 5, 6** **A** = Coppia frenante: **A, B, C, ...**

NOTA BENE:
- Con il freno, occorre assicurare sempre una pressione minima per l'apertura del freno superiore del 20% a quella della tabella dei freni
- La pressione max. di comando del freno non deve superare i 50 bar.

Accessori					
	P ...	B0A	M0A	G0A	W0A

A4.2 CARATTERISTICHE COSTRUTTIVE

• É specificato l'uso di soli oli e grassi sintetici.
• Sono montati esclusivamente anelli di tenuta con mescola in VITON®.
• Gli anelli paraolio sono dotati di labbro parapolvere.
• I tappi di sfiato sono corredati di valvola a molla anti-intrusione, che previene la contaminazione del lubrifi cante da parte di particelle solide provenienti dall'esterno.
• I tappi con funzione di carico, scarico e livello dell'olio sono in acciaio e la relativa rondella anti-svitamento in alluminio.
• All'esterno del riduttore non è presente alcun elemento metallico strisciante.
• Viene garantita l'assenza di parti in plastica in grado di accumulare cariche elettrostatiche o, altrimenti, schermate.
• Ogni riduttore è corredato del relativo disegno d'installazione che riporta le seguenti informazioni:
- principali caratteristiche tecniche
- specifiche per l'installazione
- posizione dei tappi olio per la specifica posizione di montaggio
- indicazioni per la lubrificazione
• Applicazione di una targa identificativa aggiuntiva, con specifica della categoria di prodotto. Vedi esempio:

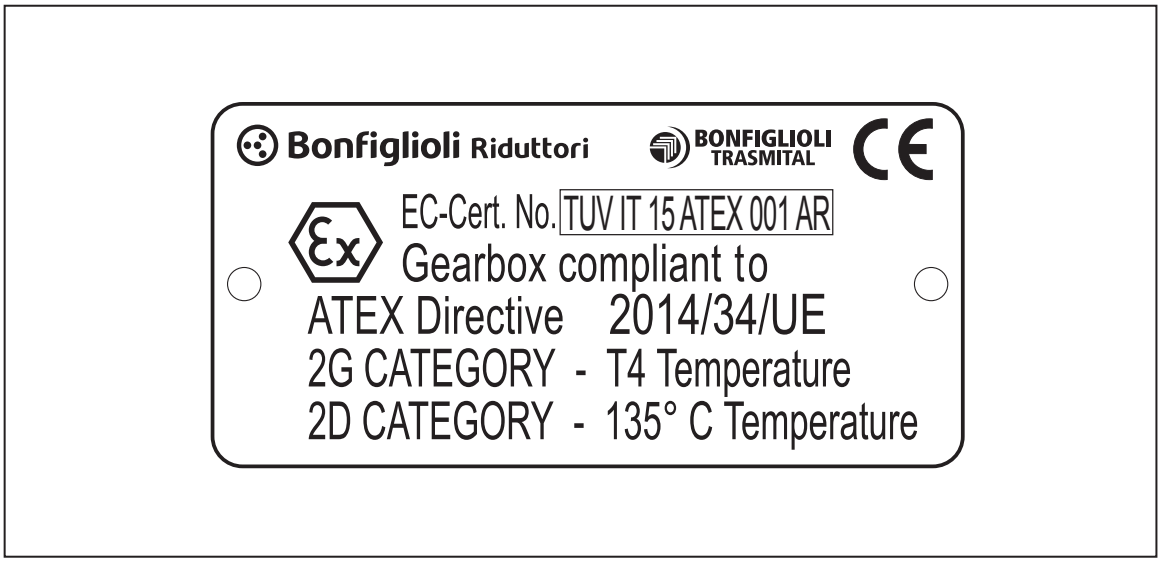

A4.3 CARATTERISTICHE OPERATIVE

Per le installazioni nella zona 21 e 22 deve essere predisposto ed attivato, a cura del committente, uno specifico piano di pulizia periodica delle superfici e dei recessi per evitare che eventuali depositi di polvere superino lo spessore di 5 mm.

A4.4 SELEZIONE DEL PRODOTTO

Il procedimento di selezione di riduttori e motoriduttori è invariato rispetto a quello specificato nel catalogo della Serie 300M, e da eventuali future revisioni dello stesso.
I capitoli qui di seguito indicati costituiscono invece variazione rispetto a quanto riportato nel catalogo, e successive revisioni e, nella selezione di un prodotto conforme alla 2014/34/UE, **devono ritenersi prevalenti** rispetto alle specifiche fornite nel catalogo di riferimento ed applicabili ai riduttori installabili in zone prive di rischio di esplosione.
Anticipiamo che variazioni sostanziali si riscontrano solo in merito a:
• L'applicazione di un fattore correttivo della potenza termica
• L'applicazione di un fattore di servizio « f_s » maggiormente cautelativo

- Potenza termica « P_t » [kW]
È il parametro che indica il limite termico del riduttore. Il valore è reperibile nelle tabelle dati tecnici riduttori e motoriduttori e rappresenta la potenza trasmissibile in servizio continuo in corrispondenza della velocità di azionamento n_1 e alla temperatura ambiente di 20°C, senza che le temperature t_o e t_s superino i valori limite indicati nel capitolo "Temperature limite ammesse".
Per un tipo di servizio caratterizzato da una breve durata di funzionamento e da un tempo di sosta sufficientemente lungo da consentire il raffreddamento del gruppo, la potenza termica acquista scarsa rilevanza e si può rivelare trascurabile.
Se la temperatura ambiente è diversa da 20°C, il servizio è intermittente o la velocità di comando n_1 è diversa da quella indicata a riferimento è opportuno correggere il valore di P_t in funzione del fattore termico f_t e del fattore di velocità f_v riportati nelle tabelle seguenti. Verificare infine che sia sempre soddisfatta la relazione:

$$P_{r1} \leq P_t \times f_t \times f_v \times f_{Ex}$$

f_t					
t_a (°C)	servizio continuo	servizio intermittente			
		rapporto di intermittenza « I »			
		80%	60%	40%	20%
10	1.2	1.3	1.6	1.8	2.0
20	1.0	1.1	1.3	1.5	1.7
30	0.9	1.0	1.2	1.3	1.5
40	0.7	0.8	0.9	1.0	1.2
50	0.5	0.6	0.7	0.8	0.9

n_1 (min^{-1})	f_v
500	1.35
900	1.2
1500	1.0
1800	0.85

$$I = \frac{t_f}{t_f + t_r} \times 100$$

t_f = tempo di funzionamento a carico;
t_r = tempo di riposo.

Grandezza riduttore	Esecuzione		n° stadi	f_{EX}
	in linea	angolare		
300...309, 310M...318M, 319...321	L	-	1	0.8
300...309, 310M...318M, 319...321	L	-	2	0.9
300...309, 310M...318M, 319...321	L	-	3 - 4	1.0
300...306	-	R	2	0.8
300...309, 310M...318M, 319...321	-	R	3 - 4	0.9

- Fattore di servizio riduttori Atex con freni idraulici negativi

POS A, E, F, G Velocità ingresso [rpm]

		100	200	300	400	500	600	700	800	900	1000	1100	1200	1300	1400	1500	1600	1700	1800
300	L1																		
	L2	85%																	
	L3	85%																	
	L4	85%																	
301	L1																		
	L2	85%																	
	L3	85%																	
	L4	85%																	
303	L1	85%																	
	L2	85%																	
	L3	85%																	
	L4	85%																	
305	L1	85%																	
	L2	85%																	
	L3	85%																	
	L4	85%																	
306	L1	85%																	
	L2	85%														75%			
	L3	85%																	
	L4	85%																	
307	L1	85%																	
	L2	85%														75%			
	L3	85%																	
	L4	85%																	
309	L1	85%																	
	L2	85%														75%			
	L3	85%																	
	L4	85%																	
310M	L1	no brake																	
	L2	85%																	
	L3	85%														75%			
	L4	85%																	
311M	L1	no brake																	
	L2	85%																	
	L3	85%														75%			
	L4	85%																	
313M	L1	no brake																	
	L2	85%																	
	L3	85%														75%			
	L4	85%																	
315M	L1	no brake																	
	L2																		
	L3	85%										80%							
	L4	85%														75%			
316M	L1	no brake																	
	L2	no brake																	
	L3	85%										80%							
	L4	85%														75%			
317M	L1	no brake																	
	L2	no brake																	
	L3	85%																	
	L4	85%														75%			
318M	L1	no brake																	
	L2	no brake																	
	L3	85%										80%							
	L4	85%														75%			
319	L1	no brake																	
	L2	no brake																	
	L3	85%																	
	L4	85%										80%							
321	L1	no brake																	
	L2	no brake																	
	L3	no brake																	
	L4	85%										80%							

velocità non utilizzabile

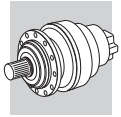

		POS O, Q, T, V Velocità ingresso [rpm]																	
		100	200	300	400	500	600	700	800	900	1000	1100	1200	1300	1400	1500	1600	1700	1800
300	L1	85%																	
	L2	85%									70%								
	L3	85%									70%								
	L4	85%									70%								
301	L1	85%																	
	L2	85%									70%								
	L3	85%									70%								
	L4	85%									70%								
303	L1	60%																	
	L2	85%									70%								
	L3	85%									70%								
	L4	85%									70%								
305	L1	60%																	
	L2	85%									70%								
	L3	85%									70%								
	L4	85%									70%								
306	L1	50%																	
	L2	60%														40%			
	L3	85%									70%								
	L4	85%									70%								
307	L1	50%																	
	L2	60%														40%			
	L3	85%									70%								
	L4	85%									70%								
309	L1	50%																	
	L2	60%														40%			
	L3	85%									70%								
	L4	85%									70%								
310M	L1	no brake																	
	L2	50%							15%					10%					
	L3	60%														40%			
	L4	85%									70%								
311M	L1	no brake																	
	L2	50%							15%					10%					
	L3	60%														40%			
	L4	85%									70%								
313M	L1	no brake																	
	L2	50%							15%					10%					
	L3	60%														40%			
	L4	85%									70%								
315M	L1	no brake																	
	L2																		
	L3	50%							15%					10%					
	L4	60%														40%			
316M	L1	no brake																	
	L2																		
	L3	50%							15%					10%					
	L4	60%														40%			
317M	L1	no brake																	
	L2																		
	L3	50%							15%					10%					
	L4	60%														40%			
318M	L1	no brake																	
	L2																		
	L3	50%							15%					10%					
	L4	60%														40%			
319	L1	no brake																	
	L2	no brake																	
	L3	50%																	
	L4	50%							15%					10%					
321	L1	no brake																	
	L2	no brake																	
	L3	no brake																	
	L4	50%							15%					10%					

velocità non utilizzabile

		POS B0, B2, I0, I2, J0, J2, M1, M3, P, R, U, W Velocità ingresso [rpm]																	
		100	200	300	400	500	600	700	800	900	1000	1100	1200	1300	1400	1500	1600	1700	1800
300	R2	85%									70%								
	R3	85%									70%								
	R4	85%									70%								
301	R2	85%									70%								
	R3	85%									70%								
	R4	85%									70%								
303	R2	85%									70%								
	R3	85%									70%								
	R4	85%									70%								
305	R2	85%									70%								
	R3	85%									70%								
	R4	85%									70%								
306	R2	85%									70%								
	R3	85%									70%								
	R4	85%									70%								
307	R2	60%														40%			
	R3	85%									70%								
	R4	85%									70%								
309	R2	60%														40%			
	R3	85%									70%								
	R4	85%									70%								
310M	R2 (A)	60%														40%			
	R2 (B)	50%						15%						10%					
	R3	85%									70%								
	R4	85%									70%								
311M	R2 (A)	60%														40%			
	R2 (B)	50%						15%						10%					
	R2 (C)	50%						15%						10%					
	R3	60%														40%			
	R4	85%									70%								
313M	R2 (A)	60%																	
	R2 (B)	50%						15%						10%					
	R2 (C)	50%						15%						10%					
	R3	60%														40%			
	R4	85%									70%								
315M	R3 (A)	60%																	
	R3 (B)	50%						15%						10%					
	R3 (C)	50%						15%						10%					
	R4	60%														40%			
316M	R3 (B)	50%						15%						10%					
	R3 (C)	50%						15%						10%					
	R4	60%														40%			
317M	R3 (A)	60%																	
	R3 (B)	50%						15%						10%					
	R3 (C)	50%						15%						10%					
	R4	60%														40%			
318M	R4 (B)	50%						15%						10%					
	R4 (C)	50%						15%						10%					
319	R4 (B)	60%																	
	R4 (C)	50%						15%						10%					
	R4 (C)	50%						15%						10%					
321	R4 (B)	60%																	
	R4 (C)	50%						15%						10%					
	R4 (C)	50%						15%						10%					

velocità non utilizzabile

		POS B1, B3, I1, I3, J1, J3, M0, M2 Velocità ingresso [rpm]																	
		100	200	300	400	500	600	700	800	900	1000	1100	1200	1300	1400	1500	1600	1700	1800
300	R2	85%																	
	R3	85%																	
	R4	85%																	
301	R2	85%																	
	R3	85%																	
	R4	85%																	
303	R2	85%																	
	R3	85%																	
	R4	85%																	
305	R2	85%																	
	R3	85%																	
	R4	85%																	
306	R2	85%																	
	R3	85%																	
	R4	85%																	
307	R2	85%														75%			
	R3	85%																	
	R4	85%																	
309	R2	85%														75%			
	R3	85%																	
	R4	85%																	
310M	R2 (A)	85%														75%			
	R2 (B)	85%																	
	R3	85%																	
	R4	85%																	
311M	R2 (A)	85%														75%			
	R2 (B)	85%																	
	R2 (C)	85%																	
	R3	85%														75%			
	R4	85%																	
313M	R2 (A)	60%																	
	R2 (B)	85%																	
	R2 (C)	85%																	
	R3	85%														75%			
	R4	85%																	
315M	R3 (A)	60%																	
	R3 (B)	85%																	
	R3 (C)	85%																	
	R4	85%														75%			
316M	R3 (B)	85%																	
	R3 (C)	85%																	
	R4	85%														75%			
317M	R3 (A)	85%																	
	R3 (B)	85%																	
	R3 (C)	85%																	
	R4	85%														75%			
318M	R4 (B)	85%																	
	R4 (C)	85%																	
319	R4 (B)	60%																	
	R4 (C)	85%																	
	R4 (C)	85%																	
321	R4 (B)	85%																	
	R4 (C)	85%																	
	R4 (C)	85%																	

velocità non utilizzabile

- Fattore di servizio « f_s »

Fattore di servizio « f_s »						
Carico	Avviamenti / ora	Durata totale di funzionamento (h)				
		≤ 5000	10000	15000	25000	50000
		Durata di funzionamento giornaliera (h)				
	z	h < 4	4 < h < 8	8 < h < 12	12 < h < 16	16 < h < 24
Uniforme	Z < 10	1.10	1.10	1.15	1.30	1.60
	10 < Z < 30	1.10	1.15	1.30	1.50	1.80
	30 < Z < 100	1.10	1.25	1.45	1.60	2.00
Variabile, con urti moderati	Z < 10	1.10	1.25	1.45	1.60	2.00
	10 < Z < 30	1.10	1.40	1.60	1.80	2.20
	30 < Z < 100	1.20	1.50	1.70	2.00	2.40
Variabile, con urti forti	Z < 10	1.20	1.50	1.70	2.00	2.40
	10 < Z < 30	1.30	1.60	1.80	2.10	2.60
	30 < Z < 100	1.40	1.75	2.00	2.30	2.80

- Limitazione della velocità in entrata per i Riduttori monostadio L1

Grandezza Riduttore	Numero Stadi	n_1 (min^{-1}) MAX
300 , 301	L1	1000
303 , 305	L1	700
306 ... 309	L1	500
310M ... 313M	L1	400
315M , 316M	L1	300
317M , 318M , 319 ... 321	L1	200

A5 DESIGNAZIONE DEL PRODOTTO

A5.1 DESIGNAZIONE RIDUTTORI IN LINEA (300M L) E ANGOLARI (300M R)

3 11M L 2 16.7 HZ

VERSIONE USCITA

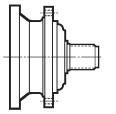

MZ: Albero maschio scanalato

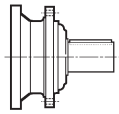

MC: Albero maschio cilindrico

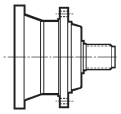

HZ: Albero maschio rinforzato scanalato

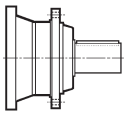

HC: Albero maschio rinforzato cilindrico

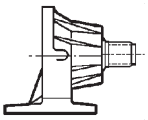

PZ: Base di supporto con albero maschio scanalato

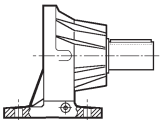

PC: Base di supporto con albero cilindrico

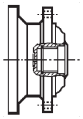

FZ: Albero femmina scanalato

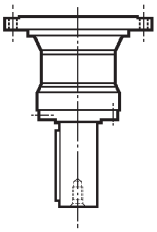

VK: Albero clindrico rinforzato per agitatori e mescolatori

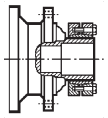

FP: Albero femmina per giunto ad attrito

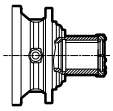

FDK: Albero femmina con doppia sede per linguetta

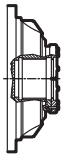

FZP: Albero femmina scanalato con dispositivo di bloccaggio assiale (raccomandato per installazioni pendolari)

RAPPORTO DI RIDUZIONE
Indicare il valore del rapporto (compresi punto ed eventuali cifre decimali) come riportato nelle tabelle dati tecnici
Es.: 1/44.6 = 44.6 1/131 = 131

NUMERO STADI DI RIDUZIONE
1 - 2 - 3 - 4

ESECUZIONE
L = Lineare

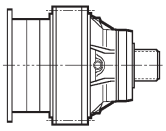

R = Angolare

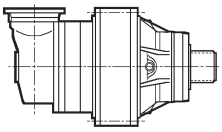

GRANDEZZA RIDUTTORE

00 = 300	**06** = 306	**11M** = 311	**17M** = 317	**23** = 325
01 = 301	**07** = 307	**13M** = 313	**18M** = 318	**25** = 325
03 = 303	**09** = 309	**15M** = 315	**19** = 319	
05 = 305	**10M** = 310	**16M** = 316	**21** = 321	

SERIE

-	V11B	A	A	W0A	EX	...

OPZIONI

ROTAZIONE PREFERENZIALE ALBERO VELOCE
(applicabile solo ai riduttori angolari)

RA = antioraria
RO = oraria

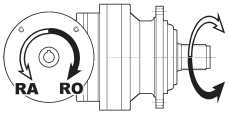

SPECIFICA DELLA CONFIGURAZIONE CONFORME ALLA VECCHIA DIRETTIVA 94/9/CE E NUOVA DIRETTIVA 2014/34/UE

ACCESSORI ALBERO LENTO

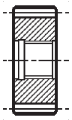

P... = Pignoni

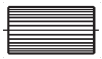

B0A = Barra scanalata

M0A = Manicotto liscio

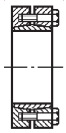

G0A = Giunto ad attrito

W0A = Flangia

ORIENTAMENTO FLANGIA MOTORE

POSIZIONE DI MONTAGGIO

	Nelle posizioni di montaggio caratterizzate da albero lento verticale, il riduttore sarà corredato di vaso d'espansione. Richiedere il relativo disegno d'ingombro al Servizio Tecnico di Bonfiglioli.	

ENTRATA

Albero veloce

	V01A	V01B	V05B	V06B	V07A	V07B	V10B	V11B	V15B
diam.	Ø24	Ø38	Ø48	Ø60	Ø60	Ø80	Ø80	Ø80	Ø120

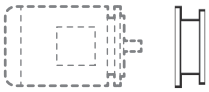

Predisposizione motore elettrico **P + IEC** motore (P71…P250)

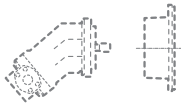

Predisposizione motore idraulico
BONFIGLIOLI TECHNICAL SERVICE

SOLO CON IN ENTRATA MOTORE IDRAULICO

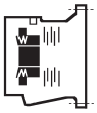

Freno idraulico negativo a dischi multipli standard
6 = Grandezza: **4, 5, 6**
A = Coppia frenante: **A, B, C, ...**

Freno idraulico negativo a dischi multipli per motore orbitale
SF = Senza freno

A5.2 DESIGNAZIONE RIDUTTORI COMBINATI VITE+EPICICLOIDALE (3/V)

3/V 05 L 3 623 PC

VERSIONE USCITA

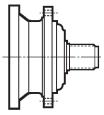

MZ: Albero maschio scanalato

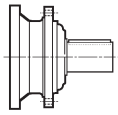

MC: Albero maschio cilindrico

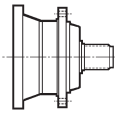

HZ: Albero maschio rinforzato scanalato

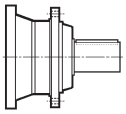

HC: Albero maschio rinforzato cilindrico

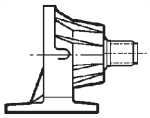

PZ: Base di supporto con albero maschio scanalato

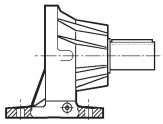

PC: Base di supporto con albero cilindrico

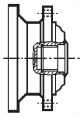

FZ: Albero femmina scanalato

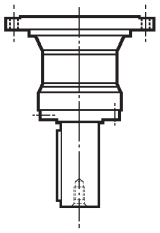

VK: Albero clindrico rinforzato per agitatori e mescolatori

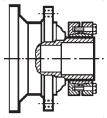

FP: Albero femmina per giunto ad attrito

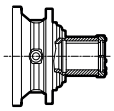

FDK: Albero femmina con doppia sede per linguetta

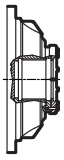

FZP: Albero femmina scanalato con dispositivo di bloccaggio assiale (raccomandato per installazioni pendolari)

RAPPORTO DI RIDUZIONE
Indicare il valore del rapporto (compresi punto ed eventuali cifre decimali) come riportato nelle tabelle dati tecnici
Es.: 1/773 = 773

NUMERO STADI DI RIDUZIONE
3

ESECUZIONE
L = Combinato serie 300, 2 stadi epicicloidali + vite senza fine

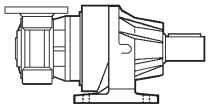

GRANDEZZA RIDUTTORE
00 = 3/V 00 **06** = 3/V 06
01 = 3/V 01
03 = 3/V 03
05 = 3/V 05

SERIE
Riduttori combinati serie 300 / riduttori a vite senza fine

P80 **B5** **AF** **W0A** **EX**

SPECIFICA DELLA CONFIGURAZIONE CONFORME ALLA DIRETTIVA 2014/34/UE

ACCESSORI ALBERO LENTO

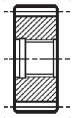

P... = Pignoni

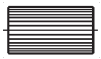

B0A = Barra scanalata

M0A = Manicotto liscio

G0A = Giunto ad attrito

W0A = Flangia

POSIZIONE DI MONTAGGIO

FORMA COSTRUTTIVA
B5, B14

ENTRATA

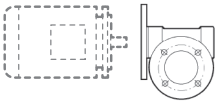

Predisposizione motore elettrico
P + grandezza motore (80,90,100,132,160, ...)

Albero veloce
HS

A6 DICHIARAZIONE DI CONFORMITÁ

La Dichiarazione di Conformità è il documento che attesta la conformità del prodotto alla Direttiva 2014/34/UE.
La validità del certificato è legata al rispetto delle istruzioni che sono specificate nel Manuale d'uso, installazione e manutenzione per l'uso in sicurezza del prodotto, in tutte le fasi della sua vita attiva.
L'utente è invitato a dotarsene scaricandolo all'indirizzo www.bonfiglioli.com dove il Manuale è disponibile in diverse lingue e nel formato PDF.
Di particolare rilievo sono le prescrizioni relative alle condizioni ambientali che, se non rispettate in condizione di funzionamento, fanno decadere la validità del certificato stesso.
In caso di dubbio sulla validità della Dichiarazione di Conformità contattare il servizio tecnico-commerciale di BONFIGLIOLI RIDUTTORI.

M1 SIMBOLOGIA E UNITÀ DI MISURA

Simbolo	Unità di misura	Descrizione
cosφ	–	Fattore di potenza
η	–	Rendimento
f_m	–	Fattore correttivo della potenza
I	–	Rapporto di intermittenza
I_N	[A]	Corrente nominale
I_S	[A]	Corrente di spunto
J_C	[Kgm^2]	Momento di inerzia del carico
J_M	[Kgm^2]	Momento di inerzia motore
K_c	–	Fattore di coppia
K_d	–	Fattore di carico
K_J	–	Fattore di inerzia
M_A	[Nm]	Coppia accelerante media
M_B	[Nm]	Coppia frenante
M_N	[Nm]	Coppia nominale
M_L	[Nm]	Coppia resistente media
M_S	[Nm]	Coppia di spunto

Simbolo	Unità di misura	Descrizione
n	[min^{-1}]	Velocità nominale
P_B	[W]	Potenza assorbita dal freno a 20°C
P_n	[kW]	Potenza nominale
P_r	[kW]	Potenza richiesta
t_1	[ms]	Ritardo di sblocco del freno con alimentatore a semionda
t_{1s}	[ms]	Tempo di sblocco del freno con alimentatore a controllo elettronico
t_2	[ms]	Ritardo di frenatura con disgiunzione lato c.a.
t_{2c}	[ms]	Ritardo di frenatura con disgiunzione circuito c.a. e c.c.
t_a	[°C]	Temperatura ambiente
t_f	[min]	Tempo di funzionamento a carico costante
t_r	[min]	Tempo di riposo
W	[J]	Lavoro di frenatura accumulato tra due regolazioni del traferro
W_{max}	[J]	Energia massima per singola frenatura
Z	[1/h]	N° di avviamenti ammissibili, a carico
Z_0	[1/h]	N° di avviamenti ammissibili a vuoto (I = 50%)

M2 CARATTERISTICHE GENERALI

M2.1 Programma di produzione

I motori elettrici asincroni trifase del programma di produzione della BONFIGLIOLI RIDUTTORI sono previsti nelle forme costruttive base IMB5 e loro derivate.
Nel presente catalogo sono evidenziate inoltre, le caratteristiche tecniche dei motori in versione integrata, tipo M.

M2.2 Normative

I motori descritti in questo catalogo sono costruiti in accordo alle Norme ed unificazioni applicabili evidenziate nella tabella seguente.

(F 1)

Titolo	CEI	IEC
Prescrizioni generali per macchine elettriche rotanti	**CEI EN 60034-1**	**IEC 60034-1**
Marcatura dei terminali e senso di rotazione per macchine elettriche rotanti	**CEI 2-8**	**IEC 60034-8**
Metodi di raffreddamento delle macchine elettriche	**CEI EN 60034-6**	**IEC 60034-6**
Dimensioni e potenze nominali per macchine elettriche rotanti	**EN 50347**	**IEC 60072**
Classificazione dei gradi di protezione delle macchine elettriche rotanti	**CEI EN 60034-5**	**IEC 60034-5**
Limiti di rumorosità	**CEI EN 60034-9**	**IEC 60034-9**
Sigle di designazione delle forme costruttive e dei tipi di installazione	**CEI EN 60034-7**	**IEC 60034-7**
Tensione nominale per i sistemi di distribuzione pubblica dell'energia elettrica a bassa tensione	**CEI 8-6**	**IEC 60038**
Grado di vibrazione delle macchine elettriche	**CEI EN 60034-14**	**IEC 60034-14**

I motori corrispondono inoltre alle Norme straniere adeguate alle IEC 60034-1 e qui riportate.

(F 2)

DIN VDE 0530	Germania
BS5000 / BS4999	Gran Bretagna
AS 1359	Australia
NBNC 51 - 101	Belgio
NEK - IEC 34	Norvegia
NF C 51	Francia
OEVE M 10	Austria
SEV 3009	Svizzera
NEN 3173	Paesi Bassi
SS 426 01 01	Svezia

M2.3 Motori per USA e Canada

CUS

L'opzione CUS è disponibile per motori BN in esecuzione NEMA Design C per le caratteristiche elettriche. I motori sono certificati in conformità alle norme CSA (Canadian Standard) C22.2 N° 100 e UL (Underwriters Laboratory) UL 1004-1, come indicato sul file UL E308649.
La targhetta dei motori BN riporta entrambi i marchi sotto illustrati:

C US

NOTA:
A partire dal **01/06/2016** motori CUS con livello di efficienza inferiore all'IE3 (i.e. "Premium Efficiency") non possono essere commercializzati negli USA e in Canada a meno che una o più tra le seguenti condizioni siano verificate:

- Motori a doppia polarità;
- Motori targati per servizio discontinuo (<80%);
- Motori destinati al solo funzionamento tramite inverter (opportunamente equipaggiati con etichetta "Inverter Duty Only" o similare).

L'opzione CUS non è applicabile ai motori dotati di servoventilazione.
Le tensioni delle reti di distribuzione americane e le corrispondenti tensioni nominali da specificare per il motore sono indicate nella tabella seguente:

(F 3)

Frequenza	Tensione di rete	V_{mot}
60 Hz	208 V	**200 V**
	240 V	**230 V**
	480 V	**460 V**
	600 V	**575 V**

L'opzione CUS è applicabile anche ai motori a 50 Hz.

I motori con tensione di alimentazione in rapporto 2 (es. 230/460-60; 220/440-60) presentano di serie una morsettiera a 9 terminali.
Per le stesse esecuzioni, e inoltre per l'alimentazione 575V-60Hz, la potenza di targa corrisponde a quella normalizzata a 50Hz.
Per i motori autofrenanti con freno in c.c. tipo FD l'alimentazione del raddrizzatore è da morsettiera motore con tensione 230V a.c. monofase.
Per i motori autofrenanti **l'alimentazione del freno** è così predisposta:

(F 4)

BN_FD M_FD
Da morsettiera motore 1~230V c.a.

BN_FA M_FA		Specificare
Alimentazione separata	230V Δ	230SA
Alimentazione separata	460V Y	460SA

M2.4 China Compulsory Certification

CCC

I motori elettrici destinati ad essere commercializzati nella Repubblica Popolare Cinese rientrano nell'applicabilità del sistema di certificazione CCC (China Compulsory Certification). I motori BN con coppia nominale fino a 7Nm sono disponibili con certificazione CCC e targhetta speciale riportante il marchio sotto illustrato:

L'opzione CCC non è applicabile ai motori dotati di servoventilazione.

M2.5 Direttive 2006/95/CE (LVD) e 2004/108/CE (EMC)

I motori delle serie BN ed M sono conformi ai requisiti delle Direttive 2006/95/CE (Direttiva Bassa Tensione) e 2004/108/CE (Direttiva Compatibilità Elettromagnetica), e riportano in targa la marcatura CE. Per quanto riguarda la Direttiva EMC, la costruzione è in accordo alle Norme CEI EN 60034-1, EN 61000-6-2, EN 61000-6-4.
I motori con freno in c.c. tipo FD, se corredati dell'opportuno filtro capacitivo in ingresso al raddrizzatore (opzione **CF**), rientrano nei limiti di emissione previsti dalla Norma EN 61000-6-3:2007 "Compatibilità elettromagnetica - Norma Generica sull'emissione - Parte 6-3: Ambienti residenziali, commerciali e dell'industria leggera".
I motori soddisfano inoltre le prescrizioni della Norma CEI EN 60204-1 "Equipaggiamento elettrico delle macchine".
È responsabilità del costruttore o dell'assemblatore dell'apparecchiatura che incorpora i motori come componenti garantire la sicurezza e la conformità alle direttive del prodotto finale.

M2.6 Tolleranze

Secondo le Norme CEI EN 60034-1, per le grandezze garantite sono ammesse le tolleranze qui indicate:

(F 5)

-0.15 (1 - η) P ≤ 50kW	Rendimento
-(1 - cosφ)/6 min 0.02 max 0.07	Fattore di potenza
±20% *	Scorrimento
+20%	Corrente a rotore bloccato
-15% +25%	Coppia a rotore bloccato
-10%	Coppia max

* ± 30% per motori con Pn < 1 kW

M3 CARATTERISTICHE MECCANICHE

M3.1 Forme costruttive

I motori serie BN sono previsti nelle forme costruttive indicate in tabella (F6) secondo le Norme CEI EN 60034-14.

Le forme costruttive sono le seguenti:

IM B5 (base)
IM V1, IM V3 (derivate)

I motori in forma costruttiva IM B5 possono essere installati nelle posizioni IM V1 e IM V3, in questi casi, sulla targa del motore sarà indicata la forma costruttiva base IM B5.
Nelle forme costruttive dove il motore assume una posizione verticale con albero in basso, si consiglia di richiedere l'esecuzione con tettuccio parapioggia (da prevedere sempre nel caso di motori autofrenanti).
Tale esecuzione, pressente nelle opzioni, va richiesta espressamente in fase di ordine in quanto non è prevista nella versione base.

(F 6)

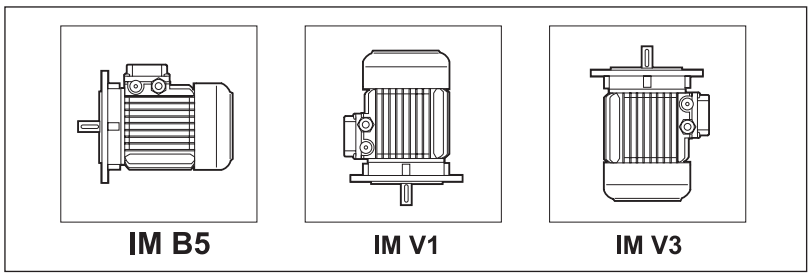

I motori in forma flangiata possono essere forniti con dimensioni di accoppiamento ridotte, come riportato nella tabella seguente - esecuzioni **B5R.** Il loro utilizzo in abbinamento ai riduttori dovrà in ogni caso risultare coerente con la massima potenza installabile sui riduttori stessi (vedere i capitoli "Predisposizioni motori"). Nei casi in cui non sia rispettata questa condizione occorre contattare il Servizio Tecnico per la verifica dell'abbinamento.

(F 7)

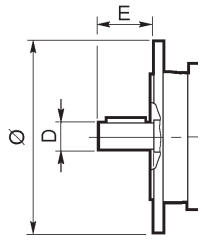

	BN 71	BN 80	BN 90	BN 100	BN 112	BN 132
	DxE - Ø					
B5R (1)	11x23 - 140	14x30 - 160	19x40 - 200	24x50 - 200	24x50 - 200	28x60 - 250

(1) flangia con fori passanti

M3.2 Grado di protezione

IP..

La tabella sottostante riassume la disponibilità dei vari gradi di protezione.
Indipendentemente dal grado di protezione specificato, per installazione all'aperto i motori devono essere protetti dall'irraggiamento diretto e, nel caso d'installazione con albero rivolto verso il basso, è necessario specificare ulteriormente il tettuccio di protezione contro l'ingresso di acqua e corpi solidi (opzione **RC**).

(F 8)

		IP 54	IP 55	IP 56
BN	**M**	⊖	standard	a richiesta
BN_FD **BN_FA**	**M_FD** **M_FA**	standard	a richiesta	⊖

M3.3 Ventilazione

I motori sono raffreddati mediante ventilazione esterna (IC 411 secondo CEI EN 60034-6) e sono provvisti di ventola radiale in plastica che funziona in entrambi i sensi di rotazione.
L'installazione deve assicurare una distanza minima dalla calotta copriventola alla parete in modo da non avere impedimenti all'ingresso aria e permettere la possibilità di eseguire l'opportuna manutenzione del motore e, se previsto, del freno.
Su richiesta è possibile prevedere una ventilazione forzata indipendente (opzione U1). Questa soluzione consente di aumentare il fattore di utilizzo del motore nel caso di alimentazione da inverter e funzionamento a giri ridotti.

M3.4 Senso di rotazione

È possibile il funzionamento in entrambi i sensi di rotazione.
Con collegamento dei morsetti U1,V1,W1 alle fasi di linea L1,L2,L3 si ha rotazione oraria vista dal lato accoppiamento, mentre la marcia antioraria si ottiene scambiando fra loro due fasi.

M3.5 Rumorosità

I valori di rumorosità, rilevati secondo il metodo previsto dalle Norme ISO 1680, sono contenuti entro i livelli massimi previsti dalle Norme CEI EN 60034-9.

M3.6 Vibrazioni ed equilibratura

Tutti i rotori sono equilibrati con mezza linguetta e rientrano nei limiti di intensità di vibrazione previsti dalle Norme CEI EN 60034-14.
Per particolari esigenze di silenziosità potrà essere previsto, a richiesta, un'esecuzione antivibrante in grado ridotto B. La tabella seguente riporta i valori della velocità efficace di vibrazione per equilibratura standard (A) e incrementata (B).

(F 9)

Grado di vibrazione	Velocità di rotazione n [min^{-1}]	Limiti della velocità di vibrazione [mm/s] **BN 56 ≤ H ≤ BN 200** **M05 ≤ H ≤ M5**
A	600 < n < 3600	1.6
B	600 < n < 3600	0.70

I valori si riferiscono a misure con motore liberamente sospeso e funzionamento a vuoto.

M3.7 Morsettiera motore

La morsettiera principale è a sei morsetti per collegamento con capicorda (esecuzione a 9 morsetti per tensioni americane "Dual Voltage"). All'interno della scatola è previsto un morsetto per il conduttore di terra. Le dimensioni dei perni di attacco sono riportate nella tabella seguente.
Per l'alimentazione del freno vedi par. M6 (freno FD), M7 (freno FA).
Nel caso di motori autofrenanti, il raddrizzatore per l'alimentazione del freno è fissato all'interno della scatola e provvisto di adeguati morsetti di collegamento.
Eseguire i collegamenti secondo gli schemi riportati all'interno della scatola coprimorsetti o nei manuali d'uso.

(F 10)

		N° terminali	Filettatura terminali	Sezione max. del conduttore mm^2
BN 56 ... BN 71	**M05, M1**	6	M4	2.5
BN 80, BN 90	**M2**	6	M4	2.5
BN 100 ... BN 112	**M3**	6	M5	6
BN 132 ... BN 160MR	**M4**	6	M5	6
BN 160M ... BN 180M	**M5**	6	M6	16
BN 180L ... BN 200L	**–**	6	M8	25
BN 63 ... BN 160MR	**M05 ... M4**	9	M4	6
BN 160M ... BN 200L	**M5**	9	M6	16

M3.8 Ingresso cavi

Nel rispetto della Norma EN 50262, i fori di ingresso cavi nelle scatole morsettiera presentano filettature metriche della misura indicata nella tabella seguente.

(F 11)

		Ingresso cavi	Diametro max. cavo allacciabile [mm]
BN 63	**M05**	2 x M20 x 1.5	13
BN 71	**M1**	2 x M25 x 1.5	17
BN 80 - BN 90	**M2**	2 x M25 x 1.5	17
BN 100	**M3**	2 x M32 x 1.5	21
		2 x M25 x 1.5	17
BN 112	**—**	2 x M32 x 1.5	21
		2 x M25 x 1.5	17
BN 132...BN 160MR	**M4**	4 x M32 x 1.5	21
BN 160M...BN 200L	**M5**	2 x M40 x 1.5	28

M3.9 Cuscinetti

I cuscinetti previsti sono del tipo radiale a sfere con lubrificazione permanente precaricati assialmente. I tipi utilizzati sono indicati nelle tabelle seguenti. La durata nominale a fatica L_{10h} dei cuscinetti, in assenza di carichi esterni applicati è superiore a 40.000 ore, calcolata secondo ISO 281.
DE = lato comando **NDE** = lato opposto comando

(F 12)

	DE	**NDE**	
	M, M_FD, M_FA	**M**	**M_FD, M_FA**
M05	6004 2Z C3	6201 2Z C3	6201 2RS C3
M1	6004 2Z C3	6202 2Z C3	6202 2RS C3
M2	6007 2Z C3	6204 2Z C3	6204 2RS C3
M3	6207 2Z C3	6206 2Z C3	6206 2RS C3
M4	6309 2Z C3	6308 2Z C3	6308 2RS C3
M5	6309 2Z C3	6309 2Z C3	6309 2RS C3

(F 13)

	DE	**NDE**	
	BN	**BN**	**BN_FD BN_FA**
BN 56	6201 2Z C3	6201 2Z C3	–
BN 63	6201 2Z C3	6201 2Z C3	6201 2RS C3
BN 71	6202 2Z C3	6202 2Z C3	6202 2RS C3
BN 80	6204 2Z C3	6204 2Z C3	6204 2RS C3
BN 90	6205 2Z C3	6205 2Z C3	6305 2RS C3
BN 100	6206 2Z C3	6206 2Z C3	6206 2RS C3
BN 112	6306 2Z C3	6306 2Z C3	6306 2RS C3
BN 132	6308 2Z C3	6308 2Z C3	6308 2RS C3
BN 160MR	6309 2Z C3	6308 2Z C3	6308 2RS C3
BN 160M/L	6309 2Z C3	6309 2Z C3	6309 2RS C3
BN 180M	6310 2Z C3	6309 2Z C3	6309 2RS C3
BN 180L	6310 2Z C3	6310 2Z C3	6310 2RS C3
BN 200L	6312 2Z C3	6310 2Z C3	6310 2RS C3

M4 CARATTERISTICHE ELETTRICHE

M4.1 Tensione

I motori ad una velocità sono previsti nell'esecuzione standard per tensione nominale 230 / 400 V Δ/Y, 50 Hz, o 400 / 690 V Δ/Y, 50 Hz, con tolleranza di tensione ± 10%, in accordo a quanto specificato nella tabella sottostante.
Per tutti i motori BN ed M, la cui configurazione tensione / frequenza non sia contenuta nella tabella sottostante, la tolleranza di tensione è ridotta al ± 5%.
Per il funzionamento ai limiti di tolleranza, la temperatura può superare di 10 K il limite previsto dalla classe di isolamento adottata.
I motori sono idonei per il funzionamento sulla rete di distribuzione europea con tensione in accordo alla pubblicazione IEC 60038.

(F 14)

			V_{mot} ± 10 % 3 ~	**Esecuzione**
IE1	**BN 56 … BN 132**	**M0 … M4**	230 / 400 V - Δ/Y - 50 Hz	standard
			400 / 690 V - Δ/Y - 50 Hz	a richiesta, senza sovrapprezzo
			460 V Y - 60 Hz	standard
	BN 160 … 200	**M5**	400 / 690 V - Δ/Y - 50 Hz	standard
			460 V Δ - 60 Hz	standard

[1] solo motori a 4 poli

I motori a due velocità a 50Hz, sono previsti per tensione nominale standard 400V; tolleranze applicabili secondo CEI EN 60034-1.

Nella tabella seguente sono indicati i vari tipi di collegamenti previsti per i motori in funzione della polarità.

(F 15)

Poli		**Collegamento avvolgimento**
2	**BN 63 … BN 200**	Δ / Y ([2])
4	**BN 56 … BN 200**	
6	**BN 63 … BN 200**	
8	**BN 71 … BN 132**	
2/4	**BN 63 … BN 132**	Δ / YY (Dahlander)
2/6	**BN 71 … BN 132**	Y / Y (due avvolgimenti)
2/8	**BN 71 … BN 132**	
2/12	**BN 80 … BN 132**	
4/6	**BN 71 … BN 132**	
4/8	**BN 80 … BN 132**	Δ / YY (Dahlander)

([2]) I motori con tensione in rapporto 2 (es. 230/460-60) saranno dotati di morsettiera a 9 perni con collegamento Δ Δ/ Δ o YY / Y (eccetto il BN 63 6 poli Δ / Y)

M4.2 Frequenza

La potenza di targa dei motori BN / M a 60 Hz corrisponde a quanto riportato nella tabella seguente.

(F 16)

		P_n [kW]			
		2P	4P	6P	8P (*)
BN 56A	**–**	–	0.07	–	–
BN 56B	**M0B**	–	0.1	–	–
BN 63A	**M05A**	0.21	0.14	0.1	–
BN 63B	**M05B**	0.3	0.21	0.14	–
BN 63C	**M05C**	0.45	0.3	–	–
BN 71A	**–**	0.45	0.3	0.21	0.1
–	**M1SC**	–	–	0.21	–
BN 71B	**M05SD**	0.65	0.45	0.3	0.14
BN 71C	**M1LA**	0.9	0.65	0.45	–
BN 80A	**–**	0.9	0.65	0.45	0.21
BN 80B	**M2SA**	1.3	0.9	0.65	0.30
BN 80C	**M2SB**	1.8	1.3	0.9	–
BN 90S	**–**	–	1.3	0.9	0.45
BN 90SA		1.8	–	–	–
BN 90SB		2.2	–	–	–
BN 90L	**M3SA**	2.5	–	1.3	0.65
BN 90LA		–	1.8	–	–
BN 90LB	**–**	–	2.2	–	–

		P_n [kW]			
		2P	4P	6P	8P (*)
BN 100L	**M3LA**	3.5	–	–	–
BN 100LA		–	2.5	1.8	0.9
BN 100LB	**M3LB**	4.7	3.5	2.2	1.3
BN 112M	**–**	4.7	4.7	2.5	1.8
–	**M3LC**	–	4.7	2.5	–
BN 132S	**M4SA**	–	6.5	3.5	2.5
BN 132SA		6.5	–	–	–
BN 132SB	**M4SB**	8.7	–	–	–
BN 132M	**M4LA**	11	–	–	3.5
BN 132MA		–	8.7	4.6	–
BN 132MB	**M4LB**	–	11	6.5	–
BN 160MR	**M4LC**	12.5	12.5	–	–
BN 160M	**M5SA**	–	–	8.6	–
BN 160MB	**–**	17.5	–	–	–
–	**M5SB**	17.5	17.5	–	–
BN 160L	**–**	21.5	17.5	12.6	–
–	**M5SC**	21.5	–	–	–
BN 180M	**M5LA**	24.5	21.5	–	–
BN 180L	**–**	–	25.3	17.5	–
BN 200L	**–**	–	34	–	–
BN 200LA	**–**	34	–	22	–

(*) Escluso motori M_

Motori BN / M a doppia polarità alimentati a 60 Hz avranno un aumento della potenza nominale, riferita a 50 Hz, pari al 15%.
Qualora sulla targhetta di un motore destinato ad essere alimentato a 60 Hz sia richiesto un valore di potenza nominale pari a quello normalizzato a 50 Hz, specificare in designazione l'opzione PN.
I motori normalmente avvolti per frequenza 50 Hz possono essere usati in reti a 60 Hz, ma i relativi dati dovranno essere corretti secondo la seguente tabella.
Ad esclusione di esecuzioni CUS e autofrenanti, i motori configurati a 50 Hz riportano in targhetta anche i corrispondenti valori a 60 Hz (vedere tabella sottostante).

(F 17)

50 Hz	**60 Hz**			
V - 50 Hz	**V** - 60 Hz	**Pn** - 60 Hz	M_n, M_a/M_n - 60 Hz	**n** [min^{-1}] - 60 Hz
230/400 Δ/Y	220 - 240 Δ	1	0.83	1.2
	380 - 415 Y			
400/690 Δ/Y	380 - 415 Δ			
230/400 Δ/Y	265 - 280 Δ	1.15	1	1.2
	440 - 480 Y			
400/690 Δ/Y	440 - 480 Δ			

M4.3 Temperatura ambiente

Le tabelle dei dati tecnici del catalogo riportano le caratteristiche funzionali a 50 Hz in condizioni ambientali standard secondo le Norme CEI EN 60034-1 (temperatura 40 °C e altitudine <1000 m s.l.m.). I motori possono essere impiegati a temperature comprese tra 40 °C e 60 °C applicando i declassamenti di potenza indicati nelle tabelle seguenti.

(F 18)

Temperatura ambiente (°C)	40°	45°	50°	55°	60°
Potenza ammissibile in % della potenza nominale	100%	95%	90%	85%	80%

Quando è richiesto un declassamento del motore superiore al 15%, contattare il ns. Servizio Tecnico.

M4.4 Classe d'isolamento

CL F

I motori di produzione Bonfiglioli impiegano, di serie, materiali isolanti (filo smaltato, isolanti, resine d'impregnazione) in classe **F**.

CL H

Su richiesta può venire specificata la classe di isolamento **H**.
In genere, per i motori in esecuzione standard la sovratemperatura dell'avvolgimento statore è contenuta entro il limite di 80 K, corrispondente alla sovratemperatura di classe B. L'accurata scelta dei componenti del sistema isolante consente l'impiego dei motori anche in climi tropicali ed in presenza di vibrazioni normali. Per applicazioni in presenza di sostanze chimiche aggressive, o di elevata umidità, è consigliabile contattare il Servizio Tecnico Bonfiglioli per la selezione del prodotto più idoneo. Non disponibile per i motori conformi alle norme CSA e UL (opzione CUS).

(F 19)

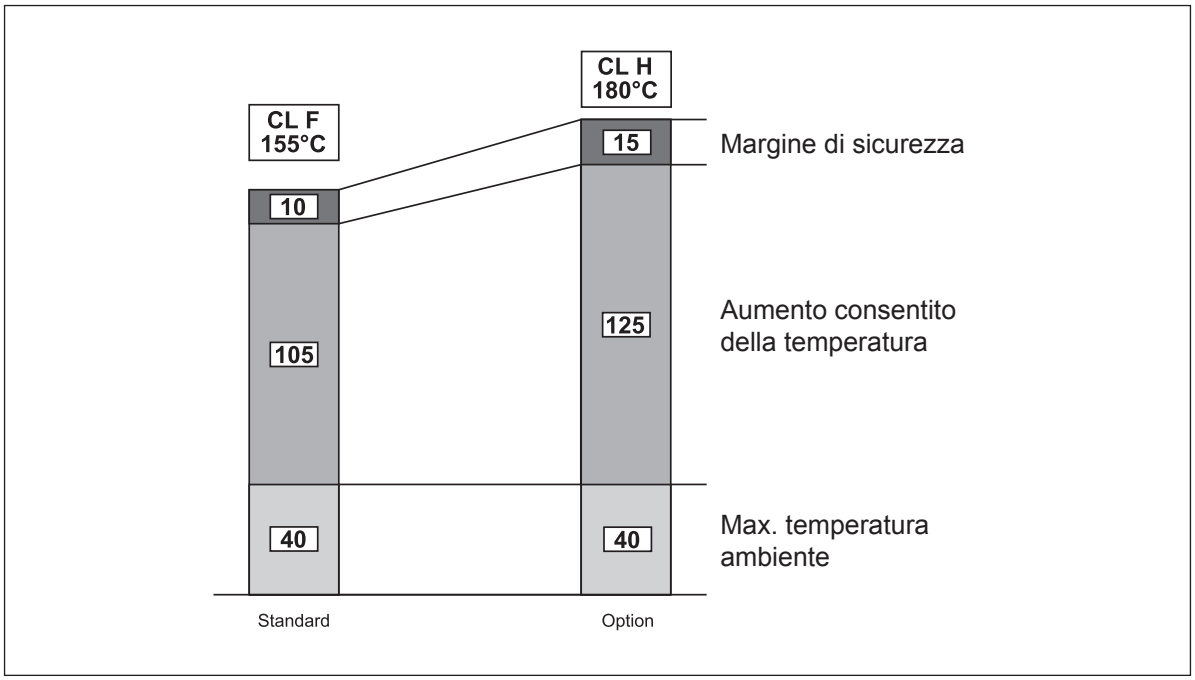

M4.5 Tipo di servizio

Se non indicato diversamente, la potenza dei motori riportata a catalogo si riferisce al servizio continuo S1. Per i motori utilizzati in condizioni diverse da S1 sarà necessario identificare il tipo di servizio previsto con riferimento alle Norme CEI EN 60034-1. In particolare per servizi S2 ed S3 è possibile ottenere una maggiorazione della potenza rispetto a quella prevista per il servizio continuo secondo quanto indicato nella tabella che segue, valida per i motori a singola polarità.
In alternativa al servizio continuo S1, in fase di configurazione del prodotto è possibile selezionare uno dei seguenti valori: S2, S3 o S9; la targhetta del motore verrà compilata con potenza aumentata coerentemente al tipo di servizio, dati elettrici dedicati e tipo di servizio rispettivamente S2-30min, S3-70% o S9.
Per ulteriori dettagli è necessario contattare il servizio Tecnico Bonfiglioli.
Per le maggiorazioni applicabili a motori a doppia polarità consultare preferibilmente il Servizio Tecnico Bonfiglioli.

(F 20)

	Servizio						
	S2			**S3 ***			**S4 - S9**
	Durata del ciclo (min)			Rapporto di intermittenza (I)			Interpellaci
	10	**30 (*)**	**60**	**25%**	**40%**	**70% (*)**	
f_m	1.35	1.15	1.05	1.25	1.15	1.1	

* La durata del ciclo dovrà comunque essere uguale o inferiore a 10 minuti; se superiore interpellare il nostro Servizio Tecnico.
(*) Valori predefiniti dalle opzioni

M4.5.1 Rapporto di intermittenza:

$$I = \frac{t_f}{t_f + t_r} \cdot 100 \qquad (23)$$

t_f = tempo di funzionamento a carico costante
t_r = tempo di riposo

M4.5.2 Servizio di durata limitata S2

Caratterizzato da un funzionamento a carico costante per un periodo di tempo limitato, inferiore a quello richiesto per raggiungere l'equilibrio termico, seguito da un periodo di riposo di durata sufficiente a ristabilire, nel motore, la temperatura ambiente.

M4.5.3 Servizio intermittente periodico S3:

Caratterizzato da una sequenza di cicli di funzionamento identici, ciascuno comprendente un periodo di funzionamento a carico costante ed un periodo di riposo. In questo servizio, la corrente di avviamento non influenza la sovratemperatura in modo significativo.

M4.6 Funzionamento con alimentazione da inverter

I motori elettrici della serie BN ed M possono essere utilizzati con alimentazione da inverter PWM, e tensione nominale all'ingresso del convertitore fino a 500 V.
Il sistema isolante sui motori di serie prevede l'isolamento di fase con separatori, l'utilizzo di filo smaltato in grado 2 e resine d'impregnazione in classe H (limite di tenuta all'impulso di tensione 1600V picco-picco e fronte di salita t_s > 0.1µs ai morsetti motore).
Le caratteristiche tipiche coppia/velocità in servizio S1 per motore con frequenza base f_b = 50 Hz sono riportate nella tabella seguente.
Per frequenze di funzionamento inferiori a circa 30 Hz, a causa della diminuzione della ventilazione, i motori standard autoventilati (IC411) devono essere opportunamente declassati in coppia o, in alternativa, devono essere provvisti di servoventilatore indipendente.
Per frequenze maggiori alla frequenza base, raggiunto il valore massimo di tensione di uscita dell'inverter, il motore lavora in un campo di funzionamento a potenza costante, con coppia all'albero che si riduce ca. con il rapporto (f/f_b).
Poiché la coppia massima del motore decresce ca. con $(f/f_b)^2$, il margine di sovraccarico ammesso dovrà essere progressivamente ridotto.

(F 21)

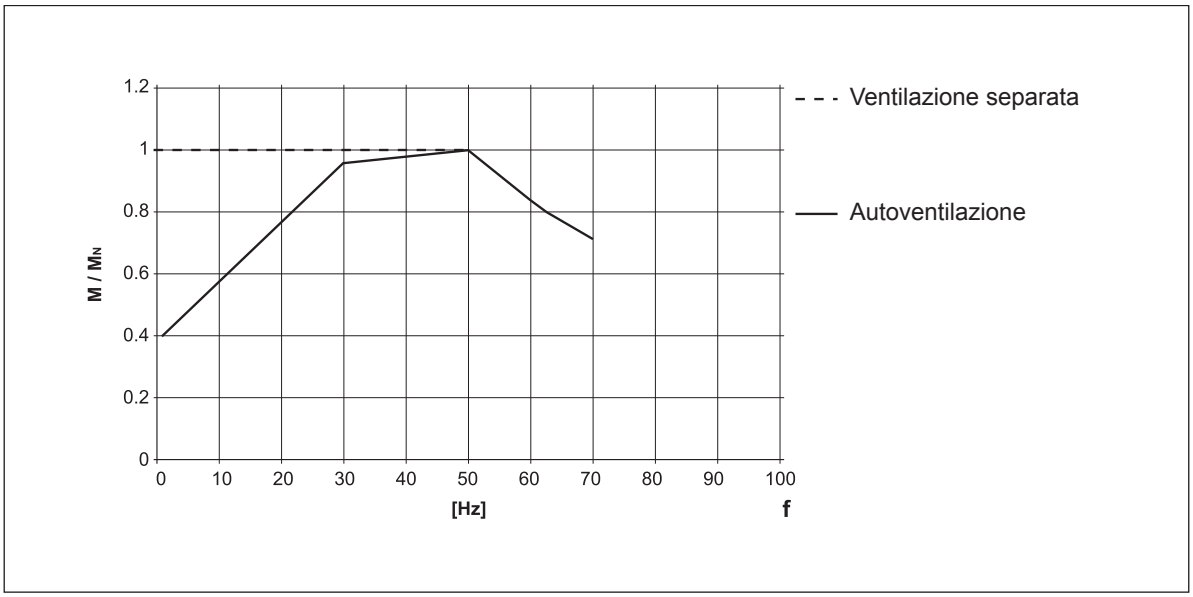

Per funzionamento oltre la frequenza nominale, la velocità limite meccanica dei motori è riportata nella tabella seguente.

(F 22)

		**n** [min^{-1}]		
		2p	**4p**	**6p**
≤ BN 112	**M05…M3**	5200	4000	3000
≥ BN 132	**M4, M5**	4500	4000	3000

A velocità superiori alla nominale i motori presentano maggiori vibrazioni meccaniche e rumorosità di ventilazione; è consigliabile, per queste applicazioni, un bilanciamento del rotore in grado B e l'eventuale montaggio del servoventilatore indipendente.
Il servoventilatore e, se presente, il freno elettromagnetico devono sempre essere alimentati direttamente da rete.

M4.7 Frequenza massima di avviamento Z

Nelle tabelle dei dati tecnici motori è indicata la max frequenza di inserzione a vuoto Z_0 con I = 50% riferita alla versione autofrenante. Questo valore definisce il numero max di avviamenti orari a vuoto che il motore può sopportare senza superare la max temperatura ammessa dalla classe di isolamento F.
Nel caso pratico di motore accoppiato ad un carico esterno con potenza assorbita P_r, massa inerziale J_c e coppia resistente media durante l'avviamento M_L, il numero di avviamenti ammissibile si può calcolare in modo approssimato con la seguente formula:

$$Z = \frac{Z_0 \cdot K_c \cdot K_d}{K_J} \qquad (24)$$

dove:

$K_J = \frac{J_m + J_c}{J_m}$	fattore di inerzia
$K_c = \frac{M_a - M_L}{M_a}$	fattore di coppia
$K_d =$	fattore di carico vedi tabella seguente

(F 23)

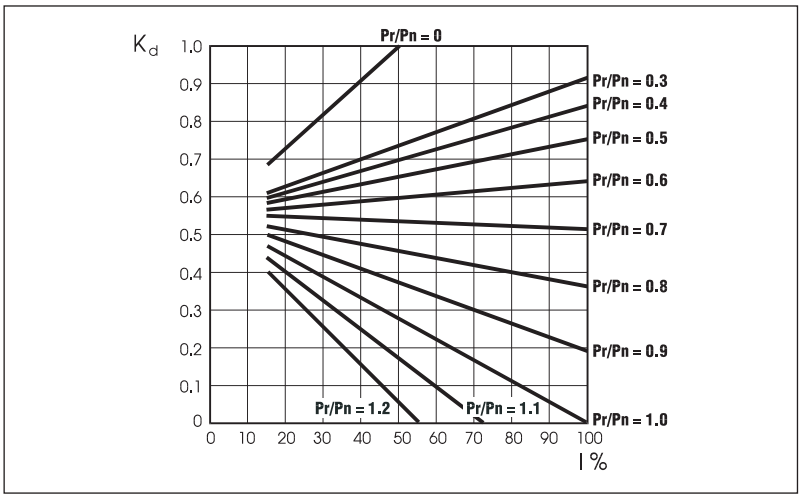

Con il numero di avviamenti così ottenuto si dovrà in seguito verificare che il massimo lavoro di frenatura sia compatibile con la capacità termica del freno W_{max} indicata nelle tabelle (F30), (F38).

M5 MOTORI ASINCRONI AUTOFRENANTI

M5.1 Funzionamento

L'esecuzione autofrenante prevede l'impiego di freni a pressione di molle alimentati in c.c. (tipo FD) o in c.a. (tipo FA).
Tutti i freni funzionano secondo il principio di sicurezza, ossia intervengono in seguito alla pressione esercitata dalle molle, in mancanza di alimentazione.

(F 24)

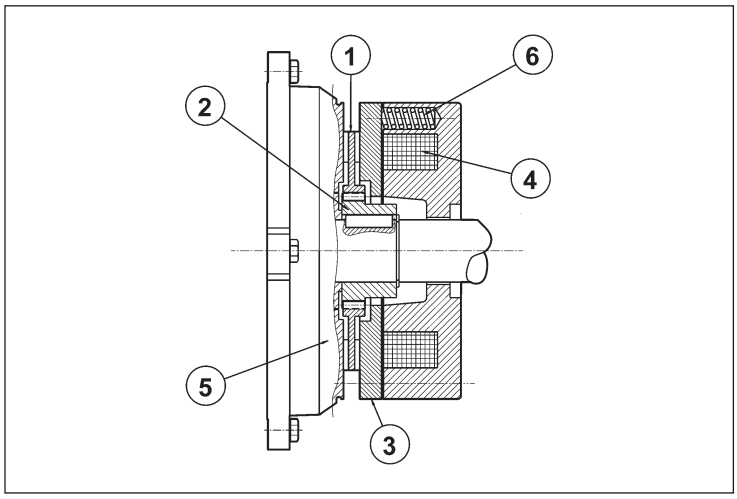

Legenda:
① disco
② mozzo
③ áncora mobile
④ bobina
⑤ scudo posteriore motore
⑥ molle

In mancanza di tensione, l'ancora mobile spinta dalle molle di pressione blocca il disco freno tra la superficie dell'ancora stessa e lo scudo motore impedendo la rotazione dell'albero.
Quando la bobina viene eccitata, l'attrazione magnetica esercitata sull'ancora mobile vince la reazione elastica delle molle e libera il disco freno, e conseguentemente l'albero motore con esso solidale.

M5.2 Caratteristiche generali

- Coppie frenanti elevate (generalmente $M_b \approx 2\ M_n$) e regolabili.
- Disco freno con anima in acciaio a doppia guarnizione d'attrito (materiale a bassa usura, senza amianto).
- Cava esagonale sull'albero motore, lato ventola (NDE), per rotazione manuale (non prevista quando sono presenti le opzioni PS, RC, TC, U1, U2, EN1, EN2, EN3, EN4, EN5, EN6).
- Sblocco meccanico manuale (opzioni **R** e **RM** per BN/M_FD; opzione **R** per BN/M_FA).
- Trattamento anticorrosivo di tutte la superfici del freno.
- Isolamento in classe F.

M6 MOTORI AUTOFRENANTI IN C.C., TIPO BN_FD e M_FD

Grandezze: BN 63 … BN 200L / M05 ... M5

(F 25)

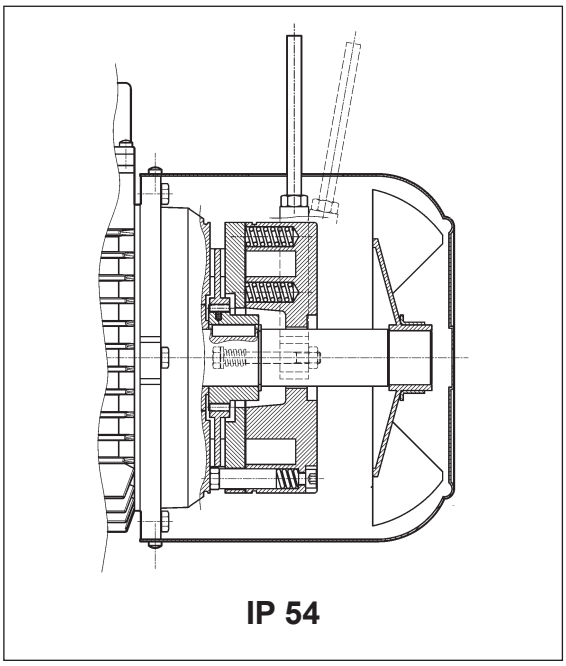

(F 26)

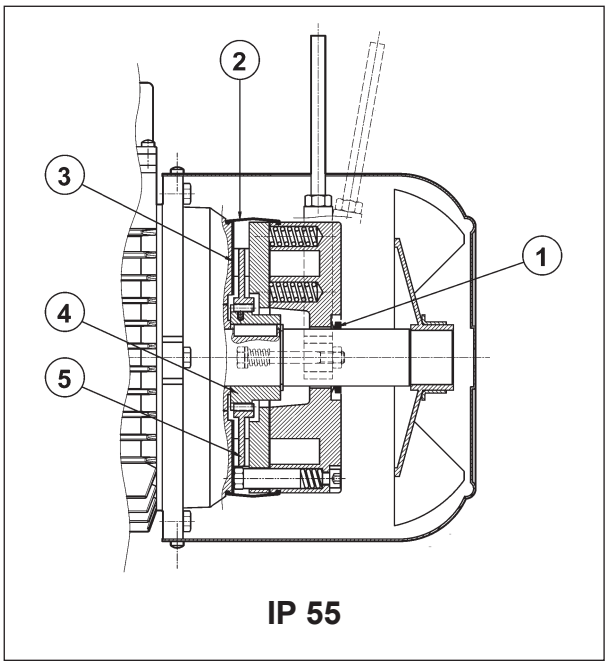

Freno elettromagnetico con bobina toroidale in **corrente continua** fissato con viti allo scudo motore; le molle di precarico realizzano il posizionamento assiale del corpo magnete.
Il disco freno è scorrevole sul mozzo trascinatore in acciaio calettato sull'albero e previsto di dispositivo antivibrazione.
I motori sono forniti con freno tarato in fabbrica al valore di coppia riportato nelle tabelle dati tecnici; la coppia frenante può essere regolata modificando il tipo e/o il numero delle molle.
A richiesta, i motori possono essere previsti di leva per lo sblocco manuale con ritorno automatico (**R**) o con mantenimento della posizione di rilascio freno (**RM**); per la posizione angolare della leva di sblocco vedi descrizione della relativa variante al paragrafo "SISTEMI DI SBLOCCO FRENO".
Il freno FD garantisce elevate prestazioni dinamiche e bassa rumorosità; le caratteristiche d'intervento del freno in corrente continua possono essere ottimizzate in funzione dell'applicazione, utilizzando i vari tipi di alimentatore disponibili e/o realizzando l'opportuno cablaggio.
Per applicazioni che prevedono sollevamenti e/o elevati valori di lavoro orario smaltibile, contattare il servizio tecnico commerciale.

M6.1 Grado di protezione

L'esecuzione standard prevede il grado di protezione IP54. In opzione il motore autofrenante tipo FD viene fornito con grado di protezione **IP55**, prevedendo le seguenti varianti costruttive:

① anello V-ring posizionato sull'albero motore N.D.E.
② protezione in gomma impermeabile e antipolvere
③ anello in acciaio inox interposto tra scudo motore e disco freno
④ mozzo trascinatore in acciaio inox
⑤ disco freno in acciaio inox

M6.2 Alimentazione freno FD

L'alimentazione della bobina freno in c.c. è prevista per mezzo di opportuno raddrizzatore montato all'interno della scatola coprimorsetti e già cablato alla bobina del freno. Per motori a singola polarità è inoltre previsto di serie il collegamento del raddrizzatore alla morsettiera motore.
Indipendentemente dalla frequenza di rete, la tensione standard di alimentazione del raddrizzatore V_B ha il valore indicato nella tabella qui di seguito:

(F 27)

2, 4, 6 P					**1 speed**
		BN_FD / M_FD			
		V_{mot} ± 10% 3 ~	V_B ± 10% 1 ~	alimentazione freno da morsettiera	alimentazione separata
BN 63…BN 132	**M05...M4LB**	230/400 V – 50 Hz	230 V	standard	specificare **V_B SA** o **V_B SD**
BN 160…BN 200	**M4LC...M5**	400/690 V – 50 Hz	400 V	standard	specificare **V_B SA** o **V_B SD**

Per i motori a doppia polarità l'alimentazione standard del freno è da linea separata con tensione d'ingresso al raddrizzatore V_B come indicato nella tabella qui di seguito:

(F 28)

2/4, 2/6, 2/8, 2/12, 4/6, 4/8 P					**2 speed**
		BN_FD / M_FD			
		V_{mot} ± 10% 3 ~	V_B ± 10% 1 ~	alimentazione freno da morsettiera	alimentazione separata
BN 63…BN 132	**M05...M4LB**	400 V – 50 Hz	230 V	⊖	specificare **V_B SA** o **V_B SD**

Il raddrizzatore è del tipo a diodi a semionda (Vc.c ≈ 0,45 x Vc.a.) ed è disponibile nelle versioni **NB**, **SB**, **NBR** e **SBR**, come dettagliato nella tabella seguente:

(F 29)

		freno	**standard**	**a richiesta**
BN 63	**M05**	**FD 02**	**NB**	**SB**
BN 71	**M1**	**FD 03** **FD 53**		
BN 80	**M2**	**FD 04**		**SBR**
BN 90S	**—**	**FD 14**		
BN 90L	**—**	**FD 05**		**NBR**
BN 100	**M3**	**FD 15**		
—		**FD 55**	**SB**	**SBR**
BN 112	**—**	**FD 06S**		
BN 132 - BN 160MR	**M4**	**FD 56** **FD 06** **FD 07**		
BN 160L - BN 180M	**M5**	**FD 08**		
BN 180L - BN 200M	**—**	**FD 09**		

(*) $t_{2c} < t_{2r} < t_2$

Il raddrizzatore **SB** a controllo elettronico dell'eccitazione, riduce i tempi di sblocco del freno sovreccitando l'elettromagnete nei primi istanti d'inserzione, per passare poi al normale funzionamento a semionda a distacco del freno avvenuto.

L'impiego del raddrizzatore tipo **SB** è sempre da prevedere nei casi di:
- elevato numero di interventi orari
- tempi di sblocco freno ridotti
- elevate sollecitazioni termiche del freno

Per applicazioni dove è richiesto un rapido intervento (ripristino della condizione frenante) del freno sono disponibili a richiesta i raddrizzatori **NBR** o **SBR**.
Questi raddrizzatori completano i tipi **NB** e **SB**, integrando nel circuito elettronico un interruttore statico che interviene diseccitando rapidamente il freno in caso di mancanza di tensione.
Questa soluzione consente di ridurre i tempi di rilascio del freno evitando ulteriori cablaggi e contatti esterni.
Per il migliore utilizzo dei raddrizzatori **NBR** e **SBR** è richiesta l'alimentazione separata del freno.
Tensioni disponibili: 230Vac ±10%, 400Vac ± 10%, 50/60 Hz (con alimentatore); 100Vdc ±10%, 180Vdc ± 10% (con opzione SD).

M6.3 Dati tecnici freni FD

Nella tabella sottostante sono riportati i dati tecnici dei freni in c.c. tipo FD.

(F 30)

Freno	Coppia frenante M_b [Nm] molle			Rilascio		Frenatura		W_{max} per frenata [J]			W	P
				t_1	$t_{1\,s}$	t_2	t_{2c}					
	6	4	2	[ms]	[ms]	[ms]	[ms]	10 s/h	100 s/h	1000 s/h	[MJ]	[W]
FD02	–	3.5	1.75	30	15	80	9	4500	1400	180	15	17
FD03	5	3.5	1.75	50	20	100	12	7000	1900	230	25	24
FD53	7.5	5	2.5	60	30	100	12					
FD04	15	10	5	80	35	140	15	10000	3100	350	30	33
FD14												
FD05	40	26	13	130	65	170	20	18000	4500	500	50	45
FD15	40	26	13	130	65	170	20					
FD55	55	37	18	–	65	170	20					
FD06S	60	40	20	–	80	220	25	20000	4800	550	70	55
FD56	–	75	37	–	90	250	20	29000	7400	800	80	65
FD06		100	50		100	250	20					
FD07	150	100	50	–	120	200	25	40000	9300	1000	130	65
FD08*	250	200	170	–	140	350	30	60000	14000	1500	230	100
FD09**	400	300	200	–	200	450	40	70000	15000	1700	230	120

* valori di coppia frenante ottenuti con n° 9, 7, 6 molle rispettivamente

** valori di coppia frenante ottenuti con n° 12, 9, 6 molle rispettivamente

t_1 = tempo di rilascio del freno con alimentatore a semionda
t_{1s} = tempo di rilascio del freno con alimentatore a controlloelettronico dell'eccitazione
t_2 = ritardo di frenatura con interruzione lato c.a. e alimentazione separata
t_{2c} = ritardo di frenatura con interruzione lato c.a.e c.c. – I valori di t_1, t_{1s}, t_2, t_{2c} indicati nella tabella sono riferiti al freno tarato alla coppia massima, traferro medio e tensione nominale
W_{max} = energia max per frenata
W = energia di frenatura tra due regolazioni successive del traferro
P_b = potenza assorbita dal freno a 20°C
M_b = coppia frenante statica (±15%)
s/h = avviamenti orari

L'usura delle guarnizioni di attrito è funzione delle condizioni operative (temperatura, umidità, velocità di slittamento, pressione specifica); i valori di usura devono pertanto essere considerati come indicativi.

M6.4 Collegamenti freno FD

I motori standard ad una velocità sono forniti con il collegamento del raddrizzatore alla morsettiera motore già realizzato in fabbrica.
Per motori a 2 velocità, e dove è richiesta l'alimentazione del freno separata, prevedere il collegamento al raddrizzatore in accordo alla tensione freno VB indicata nella targhetta del motore.
Data la natura induttiva del carico, per il comando del freno e per l'interruzione lato corrente continua devono essere utilizzati contatti con categoria d'impiego AC-3 secondo IEC 60947-4-1.

Tabella (F31) - Alimentazione freno dai morsetti motore ed interruzione lato a.c.
Tempo di arresto t_2 ritardato e funzione delle costanti di tempo del motore. Da prevedere quando sono richiesti avviamenti/arresti progressivi.
Tabella (F32) - Bobina freno con alimentazione separata ed interruzione lato c.a.
Tempo di arresto normale ed indipendente dal motore.
Si realizzano i tempi di arresto t_2 indicati nella tabella (F30).
Tabella (F33) - Bobina freno con alimentazione dai morsetti motore ed interruzione lato c.a. e c.c.
Arresto rapido con i tempi d'intervento t_{2c} indicati in tabella (F30).
Tabella (F34) - Bobina freno con alimentazione separata ed interruzione lato c.a. e c.c.
Tempo di arresto ridotto secondo i valori t_{2c} indicati in tabella (F30).

L'alimentazione del freno direttamente dalla morsettiera del motore (da tab. F31 a tab. F34) è possibile solo quando la tenzione nominale del freno corrisponde alla tensione minore del motore.

(F 31)

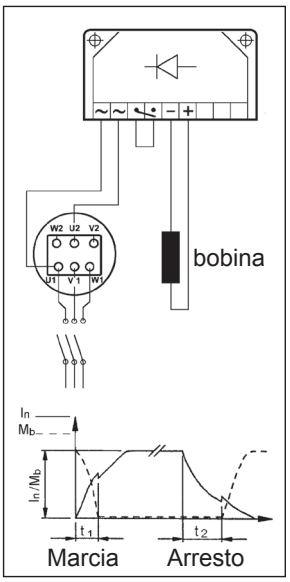

(F 32)

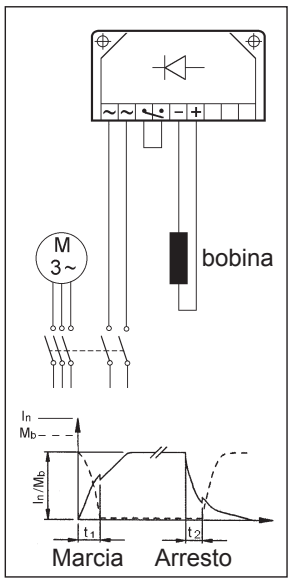

(F 33)

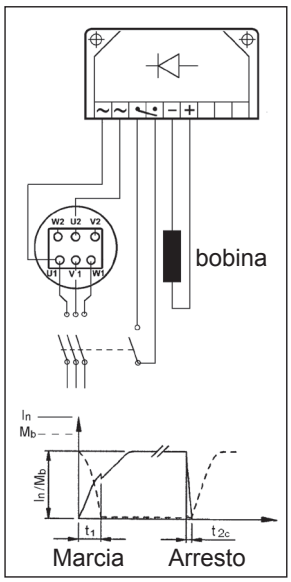

(F 34)

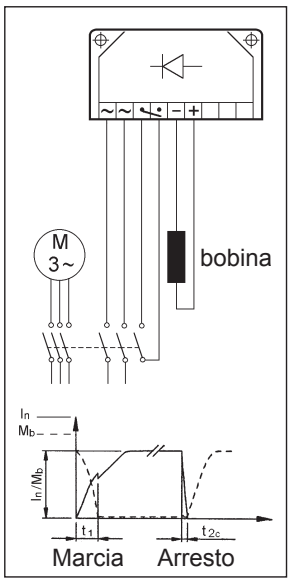

M7 MOTORI AUTOFRENANTI IN C.A., TIPO BN_FA e M_FA

Grandezze: BN 63 … BN 180M / M05 ... M5

(F 35)

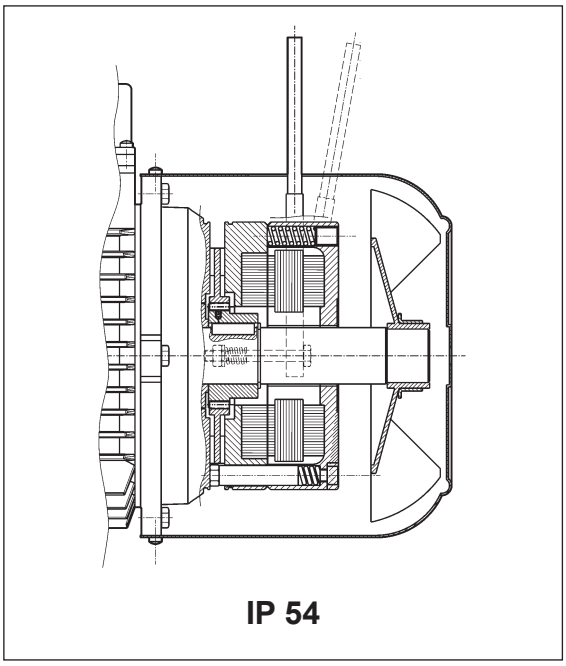

(F 36)

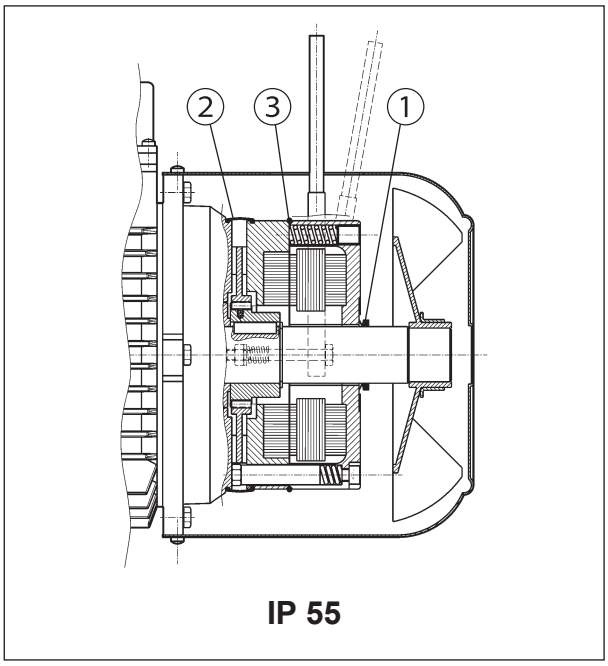

Freno elettromagnetico con alimentazione in **corrente alternata** trifase, fissato con viti allo scudo motore; le molle di precarico realizzano il posizionamento assiale del corpo magnete.
Il disco freno è scorrevole assialmente sul mozzo trascinatore in acciaio calettato sull'albero e provvisto di dispositivo antivibrazione.
La coppia frenante è pre-impostata in fabbrica su valori che sono indicati nelle tabelle dati tecnici dei relativi motori.
L'azione del freno è inoltre modulabile, regolando con continuità la coppia frenante, tramite le viti che realizzano il precarico delle molle; il campo di regolazione della coppia è: 30% $M_{bMAX} < M_b < M_{bMAX}$ (M_{bMAX} è il momento frenante max riportato in tab. (F38).
Il freno tipo FA presenta dinamiche molto elevate che lo rendono idoneo in applicazioni dove sono richieste frequenze di avviamento elevate con tempi d'intervento molto rapidi.
A richiesta, i motori possono essere previsti di leva per lo sblocco manuale con ritorno automatico (**R**). Per la posizione angolare della leva di sblocco vedi descrizione della relativa variante al paragrafo "SISTEMI DI SBLOCCO FRENO".
Per applicazioni che prevedono sollevamenti e/o elevati valori di lavoro orario smaltibile, contattare il servizio tecnico commerciale.

M7.1 Grado di protezione

L'esecuzione standard prevede il grado di protezione IP54.
In opzione, il motore autofrenante FA viene fornito con grado di protezione **IP55** prevedendo le seguenti varianti costruttive:

① anello V-ring posizionato sull'albero motore N.D.E.
② protezione in gomma impermeabile e antipolvere
③ anello O-ring

M7.2 Alimentazione freno FA

Nei motori a singola polarità l'alimentazione della bobina freno è derivata direttamente dalla morsettiera motore e la tensione del freno quindi coincide con la tensione del motore. In questo caso la tensione del freno può essere omessa dalla designazione
Per i motori a doppia polarità, e per i motori con alimentazione separata del freno, è presente una morsettiera ausiliaria con 6 terminali per il collegamento alla linea del freno. In entrambi i casi il valore di tensione del freno dovrà essere specificato in designazione.
Nella tabella seguente sono riportate le condizioni di alimentazione standard del freno in c.a. per i motori a singola e doppia polarità:

(F 37)

	BN 63…BN 132	BN 160…BN 180
motori a singola polarità	**M05...M4LB**	**M4LC...M5**
	230Δ / 400Y V ±10% – 50 Hz	400Δ/ 690Y V ±10% – 50 Hz
	265Δ / 460Y ±10% - 60 Hz	460Y – 60 Hz

	BN 63…BN 132
motori a doppia polarità (alimentazione da linea separata)	**M05...M4**
	230Δ / 400Y V ±10% – 50 Hz
	460Y - 60 Hz

Se non diversamente specificato, l'alimentazione standard del freno è 230Δ /400Y V - 50 Hz.

Su richiesta, sono disponibili tensioni speciali, nel campo 24…690 V, 50-60 Hz.

M7.3 Dati tecnici freni FA

(F 38)

Freno	Coppia frenante M_b [Nm]	Rilascio t_1 [ms]	Frenatura t_2 [ms]	W_{max} [J]			W [MJ]	P [VA]
				10 s/h	**100 s/h**	**1000 s/h**		
FA 02	3.5	4	20	4500	1400	180	15	60
FA 03	7.5	4	40	7000	1900	230	25	80
FA 04 / **FA 14**	15	6	60	10000	3100	350	30	110
FA 05 / **FA 15**	40	8	90	18000	4500	500	50	250
FA 06S	60	16	120	20000	4800	550	70	470
FA 06	75	16	140	29000	7400	800	80	550
FA 07	150	16	180	40000	9300	1000	130	600
FA 08	250	20	200	60000	14000	1500	230	1200

M_b = max coppia frenante statica (±15%)
t_1 = tempo di rilascio freno
t_2 = ritardo di frenatura
W_{max} = energia max per frenata (capacità termica del freno)
W = energia di frenatura tra due regolazioni successive del traferro
P_b = potenza assorbita dal freno a 20° (50 Hz)
s/h = avviamenti orari

N.B.
I valori di t_1 e t_2 riportati in tabella sono riferiti al freno tarato alla coppia nominale, traferro medio e tensione nominale.

L'usura delle guarnizioni di attrito è funzione delle condizioni operative (temperatura, umidità, velocità di slittamento, pressione specifica); i valori di usura devono pertanto essere considerati come indicativi.

M7.4 Collegamenti freno FA

Per i motori con alimentazione del freno derivata direttamente dall'alimentazione motore i collegamenti alla morsettiera corrispondono a quanto riportato nello schema seguente:

(F 39)

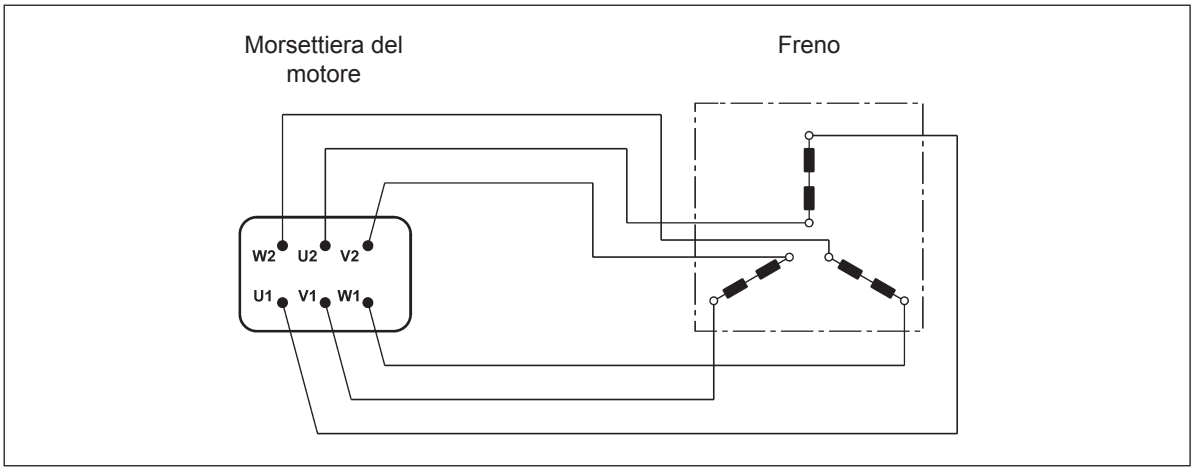

Per i motori a doppia polarità e, quando richiesto, per i motori ad una velocità con alimentazione da linea separata è prevista una morsettiera ausiliaria a 6 morsetti per il collegamento del freno; in questa esecuzione i motori prevedono la scatola coprimorsetti maggiorata. Vedi schema seguente:

(F 40)

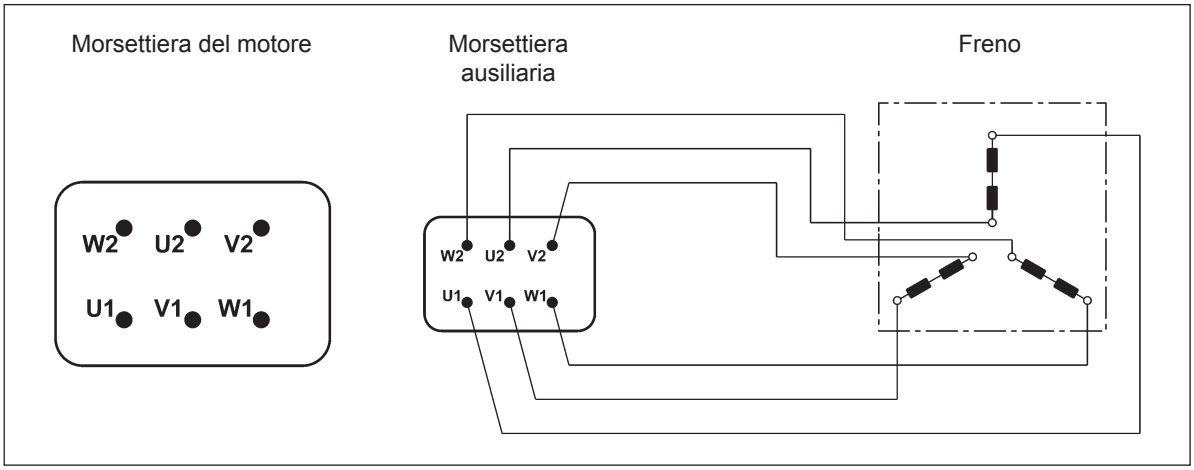

M8 SISTEMI DI SBLOCCO FRENO

I freni a pressione di molle tipo FD e FA possono essere dotati opzionalmente di dispositivi per lo sblocco manuale del freno, normalmente utilizzati per condurre interventi di manutenzione sulle parti di macchina, o dell'impianto, comandate dal motore.

R

(F 41)

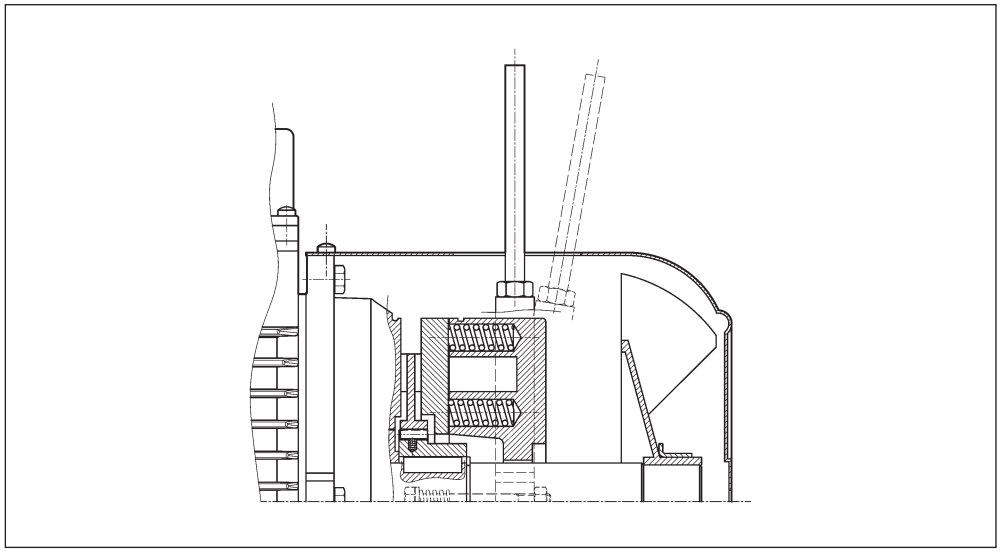

La leva di sblocco è dotata di ritorno automatico, tramite dispositivo a molla.

RM

(F 42)

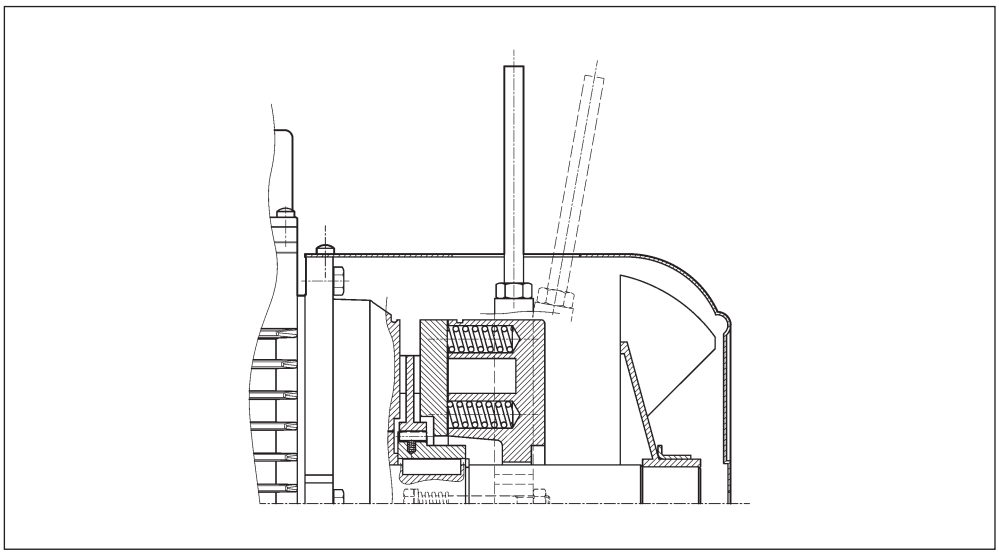

Sui motori con freno tipo FD la leva di sblocco può essere temporaneamente bloccata in posizione di rilascio del freno, avvitando la stessa fino ad impegnarne l'estremità in un risalto del corpo del freno. La disponibilità dei sistemi di sblocco freno è diversa per i vari tipi di motore, ed è descritta dalla tabella seguente:

(F 43)

	R	RM
BN_FD	**BN 63...BN 200**	**2p 63A2 ≤ H ≤ 132M2** **4p 63A4 ≤ H ≤ 132MA4** **6p 63A6 ≤ H ≤ 132MA6**
M_FD	**M 05...M 5**	**M 05...M 4LA**
BN_FA	**BN 63...BN 180M**	⊖
M_FA	**M 05...M 5**	

M8.1 Orientamento della leva di sblocco

Per entrambe le opzioni **R** e **RM**, la leva di sblocco del freno viene collocata, se non diversamente specificato, con orientamento di 90° in senso orario, rispetto alla posizione della morsettiera - riferimento [**AB**] nel disegno sottostante. Orientamenti alternativi, tipo [**AA**], [**AC**] e [**AD**] possono essere richiesti citandone la relativa specifica:

(F 44)

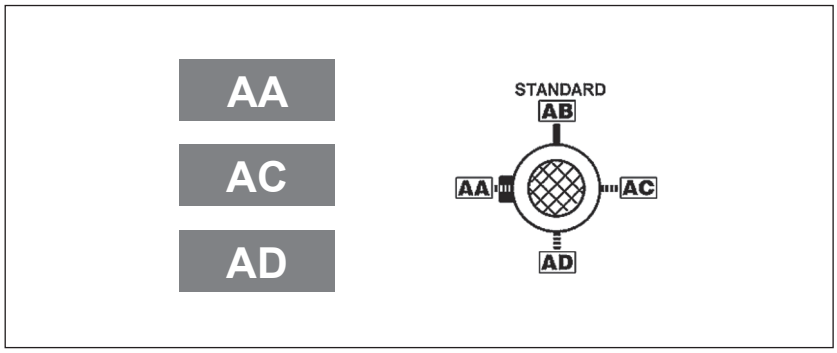

M8.2 Alimentazione separata del freno

...SA

La bobina del freno è alimentata da linea separata e indipendente dall'alimentazione del motore.
Il valore di tensione alla bobina deve essere specificato, es.230SA. L'opzione è applicabile ai motori con freno tipo FD e FA.

...SD

La bobina del freno tipo FD è alimentata direttamente con corrente continua e l'alimentatore NON è fornito. Il valore di tensione alla bobina deve essere specificato, es. 24SD.

M8.3 Caratteristiche volani (F1)

La tabella seguente riporta il peso e l'inerzia aggiuntiva del volani che possono essere richiesti tramite l'opzione F1. Le dimensioni complessive rimangono invariate.

(F 45)

Dati tecnici volano per motori tipo: BN_FD, M_FD			
		**Peso volano** [Kg]	**Inerzia volano** [Kgm^2]
BN 63	**M05**	0.69	0.00063
BN 71	**M1**	1.13	0.00135
BN 80	**M2**	1.67	0.00270
BN 90 S - BN 90 L	**–**	2.51	0.00530
BN 100	**M3**	3.48	0.00840
BN 112	**–**	4.82	0.01483
BN 132 S - BN 132 M	**M4**	6.19	0.02580

M9 OPZIONI

M9.1 Protezioni termiche

Oltre alla protezione garantita dall'interruttore magnetotermico, i motori possono essere provvisti di sonde termiche incorporate per proteggere l'avvolgimento da eccessivo riscaldamento dovuto a scarsa ventilazione o servizio intermittente.
Questa protezione dovrebbe sempre essere prevista per motori servoventilati (IC416).

M9.2 Filtro capacitivo

CF

Per i soli motori autofrenanti con freno tipo FD è disponibile in opzione il filtro capacitivo. Se corredati dell'opportuno filtro capacitivo a monte del raddrizzatore (opzione CF) i motori rientrano nelimiti di emissione previsti dalla Norma EN 61000-6-3:2007 "Compatibilità elettromagnetica – Norma Generica sull'emissione – Parte 6-3: Ambienti residenziali, commerciali e dell'industria leggera".

M9.3 Sonde termiche a termistori

E3

Sono dei semiconduttori che presentano una rapida variazione di resistenza in prossimità della temperatura nominale di intervento (150 °C).
L'andamento della caratteristica R= f(T) è normalizzato dalle Norme DIN 44081, IEC 34-11.
In genere vengono impiegati termistori a coefficiente di temperatura positivo denominati anche "resistori a conduttore freddo" PTC.
I termistori non possono comandare direttamente i relais e devono pertanto essere collegati ad un'adeguata apparecchiatura di sgancio.
Con questa protezione vengono inseriti tre PTC, (collegati in serie), nell'avvolgimento con terminali disponibili in morsettiera ausiliaria.

K1

Sono un sottogruppo dei termistori PTC le cui caratteristiche costruttive ne permettono l'impiego come sensori di temperatura aventi un coefficiente di temperatura positivo funzione della resistenza.
La temperatura di esercizio è: 0°C ... +260°C. I termistori non possono comandare direttamente i relais e devono pertanto essere collegati ad un'adeguata apparecchiatura di sgancio.
I terminali (polarizzati) di n.1 KTY 84-130 sono disponibili in una morsettiera ausiliaria.

M9.4 Sonde termiche bimetalliche

D3

I protettori di questo tipo contengono all'interno di un involucro un disco bimetallico che, raggiunta la temperatura nominale di intervento (150 °C), commuta i contatti dalla posizione di riposo.
Con la diminuzione della temperatura, il disco e i contatti riprendono automaticamente la posizione di riposo. Normalmente si impiegano tre sonde bimetalliche in serie con contatti normalmente chiusi e terminali disponibili in una morsettiera ausiliaria.

M9.5 Motore con connettore

CON

Sono disponibili tre tipi di connettori (CON 1, CON 2, CON 3) che possono essere installati in due posizioni di montaggio: lato destro scatola coprimorsettiera (C1D, C2D, C3D); lato sinistro scatola coprimorsettiera (C1S, C2S, C3S).
L'opzione CON è prevista per i motori BN e M a singola polarità (2, 4, 6, 8, poli) nelle grandezze indicate nella tabella seguente. Sono escluse tutte le versioni con doppia polarità. I connettori sono disponibili per i motori BN e M nella versione senza freno e per i motori autofrenanti dotati di freno in corrente continua FD, nelle grandezze indicate nella tabella seguente.
Sul motore è fissato il connettore maschio (dotato di pin), il connettore femmina è escluso dalla fornitura.
Con l'opzione CON è sempre previsto il collegamento a Y delle fasi.
Per motori provvisti di servoventilazione (opzione U1) l'alimentazione del ventilatore è prevista nella scatola morsettiera separata fissata al copriventola.
Nei motori dotati di encoder (opzioni EN1...EN6) i terminali della connessione dell'encoder avviene tramite cavo volante non connesso al connettore.
L'opzione CON non è applicabile ai motori dotati di freno in corrente alternata FA.
L'opzione CON non è compatibile con le opzioni U2, CUS, IC.

Dati tecnici

(F 46)

Opzione	**CON 1**
Grandezza motore	**BN63…BN112 / M05...M3**
Vista connettore	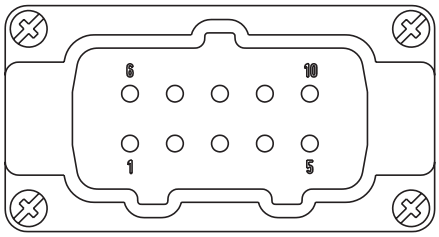
Tipo di connettore	Harting Han 10ES
Corpo connettore	Han EMC 10B con 2 leve
Numero di pins - corrente nominale	10 x 16A
Tensione di alimentazione	500 Vac
Tipo di connessione contatti	Terminali con vite

(F 47)

Opzione	**CON 2**
Grandezza motore	**BN63…BN160MR / M05...M4L**
Vista connettore	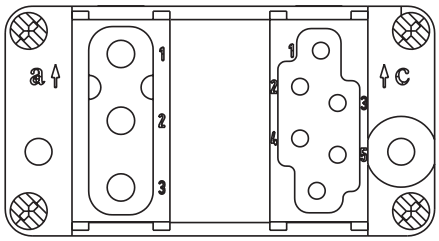
Tipo di connettore	Harting Han Modular
Corpo connettore	Han EMC 10B con 2 leve
Tipo Moduli	Modulo C + Modulo vuoto + Modulo E
Numero di pins - corrente nominale	3 x 36A / 6 x 16A
Tensione di alimentazione	500 Vac
Tipo di connessione contatti	Contatti a crimpare

(F 48)

Opzione	**CON 3**
Grandezza motore	**BN63…BN160M / M05...M4L**
Vista connettore	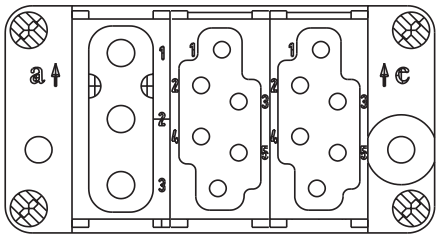
Tipo di connettore	Harting Han Modular
Corpo connettore	Han EMC 10B con 2 leve
Tipo Moduli	Modulo C + Modulo E + Modulo E
Numero di pins - corrente nominale	3 x 36A / 6 + 6 x 16A
Tensione di alimentazione	500 Vac
Tipo di connessione contatti	Contatti a crimpare

(F 49)

Orientamento connettori

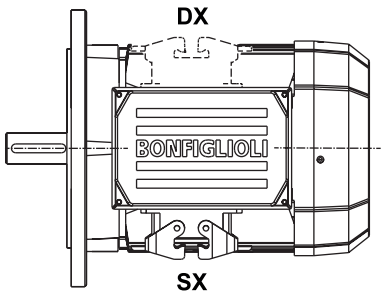

(F 50)

Dimensioni d'ingombro motori senza freno

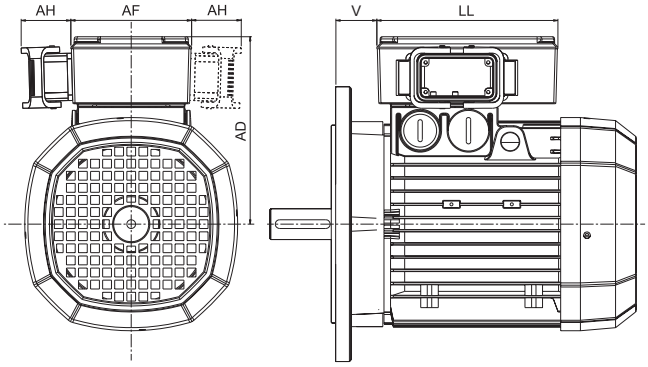

		AD (mm)	**AF** (mm)	**AH** (mm)	**LL** (mm)	**V**(*) (mm)
BN63	**M05**	136	110	45	165	4.5
BN71	**M1**	149	110	45	165	15.5
BN80	**M2**	160	110	45	165	16.5
BN90	**—**	162	110	45	165	31.5
BN100	**M3**	171	110	45	165	37.5
BN112	**—**	186	110	45	165	39
BN132	**M4**	210	140	45	188	45.5
BN160MR	**—**	210	140	45	188	161

(*) Dimensione valida solo per motori BN.

(F 51)

Dimensioni d'ingombro motori con freno FD

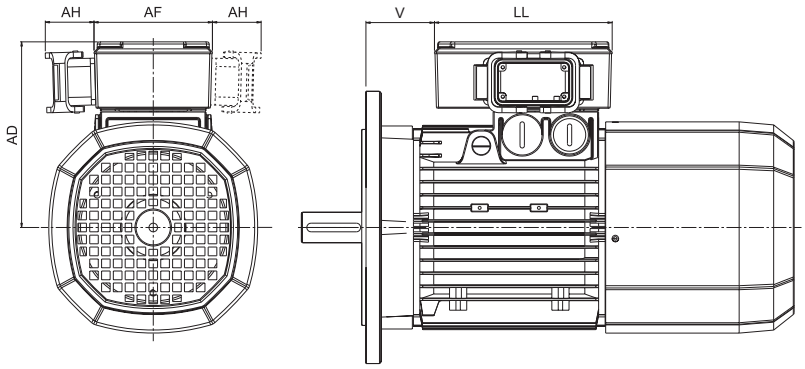

		AD (mm)	**AF** (mm)	**AH** (mm)	**LL** (mm)	**V**(*) (mm)
BN63	**M05**	136	110	45	165	4.5
BN71	**M1**	149	110	45	165	1.5
BN80	**M2**	160	110	45	165	18.5
BN90	**—**	162	110	45	165	39.5
BN100	**M3**	171	110	45	165	63.5
BN112	**—**	186	110	45	165	75
BN132	**M4**	210	140	45	188	122
BN160MR	**—**	210	140	45	188	161

(*) Dimensione valida solo per motori BN.

M9.6 Controllo della funzionalità del freno

MSW

Il microinterruttore può essere regolato per segnalare l'attrazione/rilascio dell'ancora mobile o per segnalare il raggiungimento del massimo valore ammissibile per il traferro.
L'opzione MSW è disponibile per i freni FD03...FD09.
Il microswitch è dotato di tre terminali NC, NO, COM. Nella figura sottostante sono raffigurati i principali componenti del freno equipaggiato con microswitch.

(F 52)

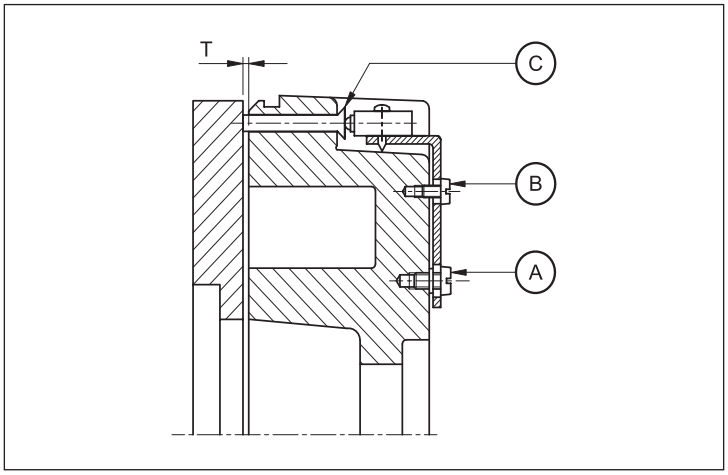

A: Viti di fissaggio
B: Vite di regolazione
C: Attuatore

M9.7 Ingresso cavi supplementare per motori autofrenanti

IC

Sulla scatola coprimorsettiera dei motori autofrenanti BN63...BN160MR / M05...M4 sono disponibili due ingressi cavo supplementari M16 x 1.5 (uno per lato).
Sulla scatola coprimorsettiera dei motori autofrenanti BN160...BN200 / M5 è disponibile un ingresso cavo supplementare M16 x 1.5 affiancato all'ingresso cavo freno.

M9.8 Riscaldatori anticondensa

H1 **NH1**

I motori funzionanti in ambienti molto umidi e/o in presenza di forti escursioni termiche, possono essere equipaggiati con una resistenza anti-condensa.
L'alimentazione monofase è prevista da morsettiera ausiliaria posta nella scatola principale.
Le potenze assorbite dalla resistenza elettrica sono elencate qui di seguito:

(F 53)

		H1	NH1
		1~ 230V ± 10% P [W]	1~ 115V ± 10% P [W]
BN 56...BN 80	**M0...M2**	10	10
BN 90...BN 160MR	**M3 - M4**	25	25
BN 160M...BN 180M	**M5**	50	50
BN 180L...BN 200L	**—**		

Importante! Durante il funzionamento del motore la resistenza anticondensa non deve mai essere inserita.

M9.9 Tropicalizzazione

TP

Su richiesta, mediante la specifica dell'opzione **TP,** gli avvolgimenti del motore ottengono una protezione aggiuntiva che li rende idonei al funzionamento in condizioni di elevata temperatura e umidità.

M9.10 Seconda estremità d'albero

PS

L'opzione esclude le varianti RC, TC, U1, U2, EN1, EN2, EN3, EN4, EN5, EN6.
Le dimensioni sono reperibili nelle tavole dimensionali dei motori.

(F 54)

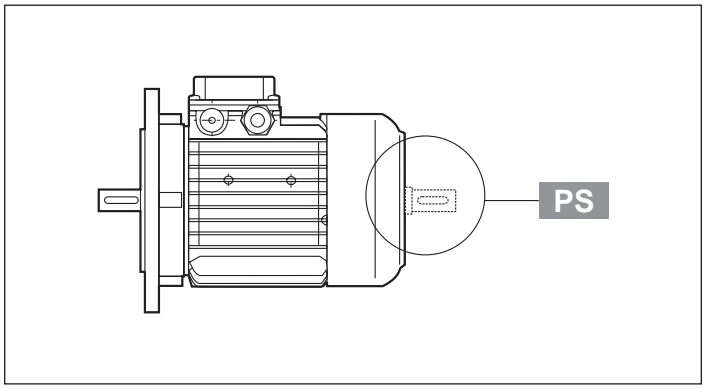

M9.11 Dispositivo antiritorno

AL **AR**

Nelle applicazioni dove è necessario impedire la rotazione inversa del motore dovuta all'azione del carico, è possibile impiegare motori provvisti di un dispositivo antiritorno (disponibile solo sulla serie M). Questo dispositivo, pur consentendo la libera rotazione nel senso di marcia, interviene istantaneamente in caso di mancanza di alimentazione bloccando la rotazione dell'albero nel senso inverso. Il dispositivo antiritorno è lubrificato a vita con grasso specifico per questa applicazione.
In fase di ordine dovrà essere indicato chiaramente il senso di marcia previsto.
In nessun caso il dispositivo antiritorno dovrà essere utilizzato per impedire la rotazione inversa nel caso di collegamento elettrico errato. Nella tabella (F55) sono indicate le coppie nominale e massima di bloccaggio attribuite ai dispositivi antiritorno utilizzati, mentre la raffigurazione schematica del dispositivo è inserita nella tabella (F56). Le dimensioni sono le stesse del motore autofrenante.
Il senso di rotazione libera è descritto nel paragrafo "OPZIONI MOTORI" delle specifiche sezioni dedicate ai riduttori.

(F 55)

	Coppia nominale di bloccaggio [Nm]	Coppia max. di bloccaggio [Nm]	Velocità di distacco [min^{-1}]
M1	6	10	750
M2	16	27	650
M3	54	92	520
M4	110	205	430

(F 56)

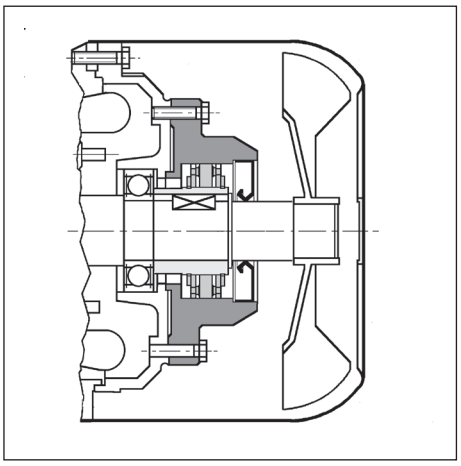

M9.12 Ventilazione

I motori sono raffreddati mediante ventilazione esterna (IC 411 secondo CEI EN 60034-6) e sono provvisti di ventola radiale in plastica, funzionante in entrambi i versi di rotazione.
L'installazione dovrà assicurare una distanza minima della calotta copriventola dalla parete più vicina, in modo da non creare impedimento alla circolazione dell'aria, oltre che permettere l'esecuzione della manutenzione ordinaria del motore e, se presente, del freno.
Su richiesta, a partire dalle grandezze BN 71, oppure M1, i motori possono essere forniti con ventilazione forzata ad alimentazione indipendente. Il raffreddamento è realizzato per mezzo di un ventilatore assiale con alimentazione indipendente, montato sulla calotta copriventola (metodo di raffreddamento IC 416).
Questa esecuzione è utilizzata in caso di alimentazione del motore tramite inverter allo scopo di estendere il campo di funzionamento a coppia costante anche a bassa velocità, o quando per lo stesso sono richieste elevate frequenze di avviamento.
Da questa opzione sono esclusi tutti i motori con doppia sporgenza d'albero (opzione PS).

(F 57)

Dati di alimentazione					
		V a.c. ± 10%	**Hz**	**P** [W]	**I** [A]
BN 71	**M1**	1~ 230	50 / 60	22	0.12
BN 80	**M2**			22	0.12
BN 90	**—**			40	0.30
BN 100 (*)	**M3**			50	0.25
BN 112	**—**	3~ 230 Δ / 400Y		50	0.26 / 0.15
BN 132S	**M4S**			110	0.38 / 0.22
BN 132M...BN 160MR	**M4L**				
BN 160...BN 180M	**M5**		50	180	1.25 / 0.72

Per la variante sono disponibili due esecuzioni alternative, denominate **U1** e **U2**, aventi lo stesso ingombro in senso longitudinale. Per entrambe le esecuzioni, la maggiore lunghezza della calotta copriventola (**ΔL**) è riportata nella tabella che segue. Dimensioni complessive ricavabili dalle tavole dimensionali dei motori.

(F 58)

Tabella maggiorazione lunghezze motore			
		Δ L_1	**Δ L_2**
BN 71	**M1**	93	32
BN 80	**M2**	127	55
BN 90	**—**	131	48
BN 100	**M3**	119	28
BN 112	**—**	130	31
BN 132S	**M4S**	161	51
BN 132M	**M4L**	161	51

ΔL_1 = variazione dimensionale rispetto alla quota LB del motore standard corrispondente
ΔL_2 = variazione dimensionale rispetto alla quota LB del motore autofrenante corrispondente

U1

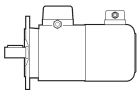

Terminali di alimentazione del ventilatore in scatola morsetti separata.
Nei motori autofrenanti grandezza BN 71...BN 160MR, M1...M4L, con variante **U1**, la leva di sblocco non è collocabile nella posizione AA.
L'opzione non è disponibile per i motori conformi alle norme CSA e UL (opzione CUS).

U2

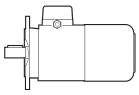

I terminali del ventilatore sono collocati nella scatola morsettiera principale del motore. L'opzione **U2** non è applicabile ai motori da BN 160 a BN 200L, M5, con eccezione dei motori BN 160MR, per i quali l'opzione è disponibile e ai motori con opzione CUS (conformi alle norme CSA e UL).

(F 59)

		V a.c. ±10%	**Hz**	**P** [W]	**I** [A]
BN 71	**M1**	1 ~ 230	50 / 60	22	0.12
BN 80	**M2**			22	0.12
BN 90	**–**			40	0.30
BN 100	**M3**	3 ~ 230Δ / 400Y		40	0.26 / 0.09
BN 112	**–**			50	0.26 / 0.15
BN 132 ... BN 160MR	**M4L**			110	0.38 / 0.22

M9.13 Tettuccio parapioggia

RC

Il dispositivo parapioggia, che è raccomandato quando il motore è montato verticalmente con l'albero verso il basso, serve a proteggere il motore stesso dall'ingresso di corpi solidi e dallo stillicidio.
Le dimensioni aggiuntive sono indicate nella tabella sottostante.
Il tettuccio esclude le varianti PS, EN1, EN2, EN3, EN4, EN5, EN6.

(F 60)

		AQ	ΔV
BN 63	**M05**	118	24
BN 71	**M1**	134	27
BN 80	**M2**	152	25
BN 90	**—**	168	30
BN 100	**M3**	190	28
BN 112	**—**	211	32
BN 132...BN 160MR	**M4**	254	32
BN 160M...BN 180M	**M5**	302	36
BN 180L...BN 200L	**—**	340	36

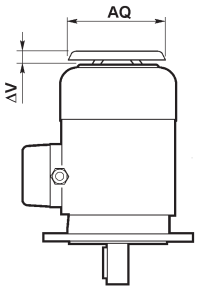

M9.14 Tettuccio tessile

TC

La variante del tettuccio tipo TC è da specificare quando il motore è installato in ambienti dell'industria tessile, dove sono presenti filamenti che potrebbero ostruire la griglia del copriventola, impedendo il regolare flusso dell'aria di raffreddamento.
L'opzione esclude le varianti EN1, EN2, EN3, EN4, EN5, EN6. L'ingombro complessivo è lo stesso del tettuccio tipo RC.

M9.15 Dispositivi di retroazione

I motori possono essere dotati di sei diversi tipi di encoder, qui di seguito descritti.
Il montaggio dell'encoder esclude le esecuzioni con doppia estremità d'albero (PS) e tettuccio di protezione (RC, TC).

EN1

Encoder incrementale, V_{IN} = 5 V, uscita line-driver RS 422.

EN2

Encoder incrementale, V_{IN} = 10-30 V, uscita line driver RS 422.

EN3

Encoder incrementale, V_{IN} = 12-30 V, uscita push-pull 12-30 V

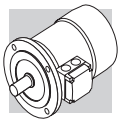

EN4

Encoder sin/cos, V_{IN} = 4.5-5.5 V, uscita Sinus $0.5V_{PP}$.

EN5

Encoder assoluto monogiro, interfaccia HIPERFACE®, V_{IN} = 7-12 V.

EN6

Encoder assoluto multigiro, interfaccia HIPERFACE®, V_{IN} = 7-12 V.

(F 61)

		EN1	EN2	EN3	EN4	EN5	EN6
interfaccia		TTL/RS 422	TTL/RS 422	HTL/push-pull	Sinus 0.5 VPP	HIPERFACE®	HIPERFACE®
tensione alimentazione	[V]	4...6	10...30	12...30	4.4...5.5	7...12	7...12
tensione di uscita	[V]	5	5	12...30	—	—	—
corrente di esercizio senza carico	[mA]	120	100	100	40	80	80
n° di impulsi per giro		1024					
risoluzione		—	—	—	—	15 bit	15 bit
rivoluzioni		—	—	—	—	—	12 bit
n° segnali		6 (A, B, Z + segnali invertiti)			6 (cos-, cos+, sin-, sin+, Z, $\overline{Z}$)	—	—
max. frequenza di uscita	[kHz]	600			200		
max. velocità	[min^{-1}]	6000 (9000 min^{-1} per 10 s)					
campo di temperatura di funzionamento	[°C]	-30 ... +100					
grado di protezione		IP 65					

(F 62)

EN1, EN2, EN3, EN4, EN5, EN6	
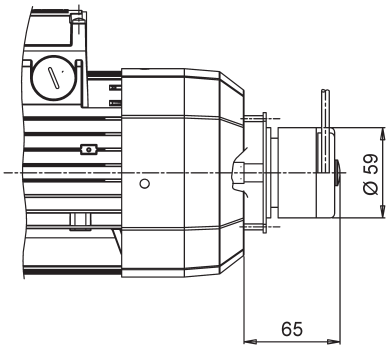	
BN 63...BN 200L	**M05...M5**
BN 63_FD...BN 200L_FD	**M05_FD...M5_FD**
BN 63_FA...BN 200L_FA	**M05_FA...M5_FA**

(F 63)

EN_ + U1		
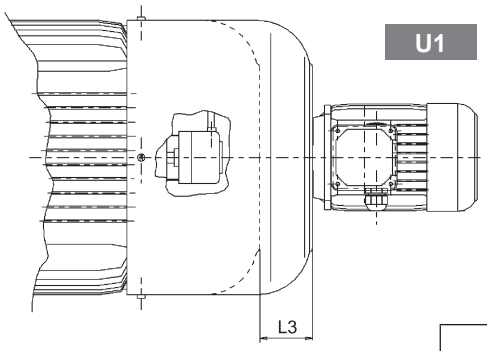		
		L3
BN 160M...BN 180M	**M5**	72
BN 180L...BN 200L	**-**	82
BN 160M_FD...BN 180M_FD	**M5_FD**	35
BN 180L_FD...BN 200L_FD	**-**	41

Se l’opzione EN_ è richiesta per motori di grandezza BN71...BN160MR / M1...M4, contemporaneamente all’opzione U1/U2, le variazioni dimensionali coincidono con quelle dell’opzione U1/U2.

M9.16 Protezione superficiale

C_

I motori, che laddove non viene richiesta una classe di protezione specifica, nelle zone verniciate (ferrose) rispettano come requisito minimo la classe di protezione C2 (UNI EN ISO 12944-2), sono forniti con protezione superficiale C3 e C4 per una migliore resistenza alla corrosione atmosferica.

PROTEZIONE SUPERFICIALE	Ambienti tipici	Temperatura superficiale max.	Classe di corrosività secondo UNI EN ISO 12944-2
C3	Ambienti urbani ed industriali, con umidità relativa dell'aria max.100% (inquinamento ambientale medio)	120°C	C3
C4	Aree industriali, zone costiere, impianti chimici, con umidità relativa dell'aria max.100% (inquinamento ambientale alto)	120°C	C4

I motori previsti con le protezioni opzionali C3 e C4 sono disponibili in diverse tinte.
Se non specificata nessuna tinta (vedere opzione "VERNICIATURA") la fornitura viene eseguita con la tinta RAL7042.
A richiesta sono fornibili motori per classe di corrosività C5 secondo UNI EN ISO 12944-2, contattando il ns. Servizio tecnico-Commerciale.

M9.17 Verniciatura

RAL_

I motori previsti con le protezioni opzionali C3 e C4 sono disponibili in diverse tinte, secondo la tabella seguente.

VERNICIATURA	Colore	Catalogazione RAL
RAL7042*	Grigio traffico A	7042
RAL5010	Blu genziana	5010
RAL9005	Nero intenso	9005
RAL9006	Alluminio brillante	9006
RAL9010	Bianco puro	9010

* Colore di fornitura standard se non specificato diversamente

NOTA - L'opzione "VERNICIATURA" è configurabile esclusivamente in abbinamento con l'opzione "PROTEZIONE SUPERFICIALE".

M9.18 Prove documentali

ACM

Attestato di conformità motori
Documento il cui rilascio attesta la conformità del prodotto all'ordinativo e la costruzione dello stesso in conformità alle procedure standard di processo e di controllo previste dal sistema di Qualità Bonfiglioli Riduttori.

CC

Certificato di collaudo
La specifica comporta la conduzione di verifiche di conformità all'ordine, controlli visivi generali e verifiche strumentali delle caratteristiche elettriche di funzionamento a vuoto. Il collaudo è riferito allo specifico motore analizzato ed applicato ad un campione statistico del lotto di spedizione.

2P — 3000 min^{-1} - S1 — 50 Hz

P_n kW		n min^{-1}	M_n Nm	IE1	η (100%) %	η (75%) %	η (50%) %	cosφ	In 400V A	Is/In	Ms/Mn	Ma/Mn	J_m x 10^{-4} kgm^2	IM B5 Kg	freno c.c. FD: Mod	Mb Nm	Z_o 1/h NB	Z_o 1/h SB	J_m x 10^{-4} kgm^2	IM B5 Kg	freno c.a. FA: Mod	Mb Nm	Z_o 1/h	J_m x 10^{-4} kgm^2	IM B5 Kg
0.18	BN 63A 2	2730	0.63	○	59.9	56.9	51.9	0.77	0.56	3.0	2.1	2.0	2.0	3.5	FD 02	1.75	3900	4800	2.6	5.2	FA 02	1.75	4800	2.6	5.0
0.25	BN 63B 2	2740	0.87	○	66.0	64.8	64.8	0.76	0.72	3.3	2.3	2.3	2.3	3.9	FD 02	1.75	3900	4800	3.0	5.6	FA 02	1.75	4800	3.0	5.4
0.37	BN 63C 2	2800	1.26	○	69.1	66.8	66.8	0.78	0.99	3.9	2.6	2.6	3.3	5.1	FD 02	3.5	3600	4500	3.9	6.8	FA 02	3.5	4500	3.9	6.6
0.37	BN 71A 2	2820	1.25	○	73.8	73.0	70.6	0.76	0.95	4.8	2.8	2.6	3.5	5.4	FD 03	3.5	3000	4100	4.6	8.1	FA 03	3.5	4200	4.6	7.8
0.55	BN 71B 2	2820	1.86	○	76.0	75.8	74.8	0.76	1.37	5.0	2.9	2.8	4.1	6.2	FD 03	5	2900	4200	5.3	8.9	FA 03	5	4200	5.3	8.6
0.75	BN 71C 2	2810	2.6	○	76.6	76.2	76.2	0.76	1.86	5.1	3.1	2.8	5.0	7.3	FD 03	5	1900	3300	6.1	10.0	FA 03	5	3600	6.1	9.7
0.75	BN 80A 2	2810	2.6	•	76.2	75.5	68.3	0.81	1.75	4.8	2.6	2.2	7.8	8.6	FD 04	5	1700	3200	9.4	12.5	FA 04	5	3200	9.4	12.4
1.1	BN 80B 2	2800	3.8	•	76.4	76.2	75.0	0.81	2.57	4.8	2.8	2.4	9.0	9.5	FD 04	10	1500	3000	10.6	13.4	FA 04	10	3000	10.6	13.3
1.5	BN 80C 2	2800	5.1	•	79.1	79.5	77.2	0.81	3.4	4.9	2.7	2.4	11.4	11.3	FD 04	15	1300	2600	13.0	15.2	FA 04	15	2600	13.0	15.1
1.5	BN 90SA 2	2870	5.0	•	82.0	81.5	78.1	0.80	3.4	5.9	2.7	2.6	12.5	12.3	FD 14	15	900	2200	14.1	16.5	FA 14	15	2200	14.1	16.4
1.85	BN 90SB 2	2880	6.1	•	82.5	82.0	75.4	0.80	4.0	6.2	2.9	2.6	16.7	14	FD 14	15	900	2200	18.3	18.2	FA 14	15	2200	18.3	18.1
2.2	BN 90L 2	2880	7.3	•	82.7	82.1	80.8	0.80	4.8	6.3	2.9	2.7	16.7	14	FD 05	26	900	2200	21	20	FA 05	26	2200	21	20.7
3	BN 100L 2	2860	10.0	•	81.5	81.3	77.4	0.79	6.7	5.6	2.6	2.2	31	20	FD 15	26	700	1600	35	26	FA 15	26	1600	35	27
4	BN 100LB 2	2870	13.3	•	83.1	83.0	77.8	0.80	8.7	5.8	2.7	2.5	39	23	FD 15	40	450	900	43	29	FA 15	40	1000	43	30
4	BN 112M 2	2900	13.2	•	85.5	84.5	83.0	0.82	8.2	6.9	3.0	2.9	57	28	FD 06S	40	—	950	66	39	FA 06S	40	950	66	40
5.5	BN 132SA 2	2890	18.2	•	84.7	84.5	81.2	0.84	11.2	5.9	2.6	2.2	101	35	FD 06	50	—	600	112	48	FA 06	50	600	112	49
7.5	BN 132SB 2	2900	25	•	86.5	86.3	84.4	0.85	14.7	6.4	2.6	2.2	145	42	FD 06	50	—	550	154	55	FA 06	50	550	154	56
9.2	BN 132M 2	2930	30	•	87.0	86.5	83.6	0.86	17.7	6.7	2.8	2.3	178	53	FD 56	75	—	430	189	66	FA 06	75	430	189	67
11	BN 160MR 2	2920	36	•	87.6	87.0	86.0	0.88	20.6	6.9	2.9	2.5	210	65											
15	BN 160MB 2	2930	49	•	89.6	89.4	88.0	0.86	28.1	7.1	2.6	2.3	340	84											
18.5	BN 160L 2	2930	60	•	90.4	90.1	89.0	0.86	34	7.6	2.7	2.3	420	97											
22	BN 180M 2	2930	72	•	89.9	89.7	89.5	0.88	40	7.8	2.6	2.4	490	109											
30	BN 200LA 2	2930	98	•	90.7	90.1	87.6	0.89	54	7.8	2.7	2.9	770	140											

○ = n.a. • = IE1

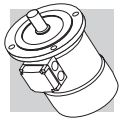

4P — 1500 min-1 - S1 — 50 Hz

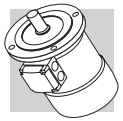

															freno c.c.						freno c.a.				
															FD						FA				
P_n kW		n min-1	M_n Nm	IE1	η (100%) %	η (75%) %	η (50%) %	cosφ	In 400V A	Is/In	Ms/Mn	Ma/Mn	J_m x 10^{-4} kgm²	IM B5 Kg	Mod	Mb Nm	Z_o 1/h NB	Z_o 1/h SB	J_m x 10^{-4} kgm²	IM B5 Kg	Mod	Mb Nm	Z_o 1/h	J_m x 10^{-4} kgm²	IM B5 Kg
0.06	**BN 56A 4**	1340	0.43	○	46.8	44.2	41.3	0.65	0.28	2.6	2.3	2.0	1.5	3.1											
0.09	**BN 56B 4**	1350	0.64	○	51.7	47.6	42.9	0.60	0.42	2.6	2.5	2.4	1.5	3.1											
0.12	**BN 63A 4**	1350	0.85	○	59.8	56.2	47.0	0.62	0.47	2.6	1.9	1.8	2.0	3.5	**FD 02**	1.75	10000	13000	2.6	5.2	**FA 02**	1.75	13000	2.6	5.0
0.18	**BN 63B 4**	1320	1.30	○	54.8	52.9	52.5	0.67	0.71	2.6	2.2	2.0	2.3	3.9	**FD 02**	3.5	10000	13000	3.0	5.6	**FA 02**	3.5	13000	3.0	5.4
0.25	**BN 63C 4**	1340	1.78	○	65.3	65.0	57.9	0.69	0.80	2.7	2.1	1.9	3.3	5.1	**FD 02**	3.5	7800	10000	3.9	6.8	**FA 02**	3.5	10000	3.9	6.6
0.25	**BN 71A 4**	1380	1.73	○	63.7	62.2	59.1	0.73	0.78	3.3	1.9	1.7	5.8	5.1	**FD 03**	3.5	7700	11000	6.9	7.8	**FA 03**	3.5	11000	6.9	7.5
0.37	**BN 71B 4**	1370	2.6	○	66.8	66.7	63.0	0.76	1.05	3.7	2.0	1.9	6.9	5.9	**FD 03**	5	6000	9400	8.0	8.6	**FA 03**	5.0	9400	8.0	8.3
0.55	**BN 71C 4**	1380	3.8	○	69.0	68.9	68.8	0.74	1.55	4.1	2.3	2.3	9.1	7.3	**FD 53**	7.5	4300	8700	10.2	10.0	**FA 03**	7.5	8700	10.2	9.7
0.55	**BN 80A 4**	1390	3.8	○	72.0	71.3	69.7	0.77	1.43	4.1	2.3	2.0	15	8.2	**FD 04**	10	4100	8000	16.6	12.1	**FA 04**	10	8000	16.6	12.0
0.75	**BN 80B 4**	1400	5.1	•	75.0	74.5	69.3	0.78	1.85	4.9	2.7	2.5	20	9.9	**FD 04**	15	4100	7800	22	13.8	**FA 04**	15	7800	22	13.7
1.1	**BN 80C 4**	1400	7.5	•	75.5	76.2	70.4	0.78	2.7	5.1	2.8	2.5	25	11.3	**FD 04**	15	2600	5300	27	15.2	**FA 04**	15	5300	27	15.1
1.1	**BN 90S 4**	1390	7.6	•	76.5	76.2	72.2	0.77	2.70	4.6	2.6	2.2	21	12.2	**FD 14**	15	4800	8000	23	16.4	**FA 14**	15	8000	23	16.3
1.5	**BN 90LA 4**	1410	10.2	•	78.7	78.5	74.9	0.77	3.6	5.3	2.8	2.4	28	13.6	**FD 05**	26	3400	6000	32	19.6	**FA 05**	26	6000	32	20.3
1.85	**BN 90LB 4**	1390	12.7	•	78.6	78.9	77.2	0.79	4.3	5.1	2.8	2.6	30	15.1	**FD 05**	26	3200	5900	34	21.1	**FA 05**	26	5900	34	21.8
2.2	**BN 100LA 4**	1410	14.9	•	81.1	81.4	79.9	0.75	5.2	4.5	2.2	2.0	40	18	**FD 15**	40	2600	4700	44	25	**FA 15**	40	4700	44	25
3	**BN 100LB 4**	1410	20	•	82.6	83.8	83.7	0.77	6.8	5.0	2.3	2.2	54	22	**FD 15**	40	2400	4400	58	28	**FA 15**	40	4400	58	29
4	**BN 112M 4**	1430	27	•	84.4	84.2	81.6	0.81	8.4	5.6	2.7	2.5	98	30	**FD 06S**	60	—	1400	107	40	**FA 06S**	60	2100	107	42
5.5	**BN 132S 4**	1440	36	•	84.7	84.8	82.5	0.81	11.6	5.5	2.3	2.2	213	44	**FD 56**	75	—	1050	223	57	**FA 06**	75	1200	223	58
7.5	**BN 132MA 4**	1440	50	•	86.0	86.3	85.3	0.81	15.5	5.7	2.5	2.4	270	53	**FD 06**	100	—	950	280	66	**FA 07**	100	1000	280	71
9.2	**BN 132MB 4**	1440	61	•	88.4	88.6	87.5	0.81	18.8	5.9	2.7	2.5	319	59	**FD 07**	150	—	900	342	75	**FA 07**	150	900	342	77
11	**BN 160MR 4**	1440	73	•	87.6	87.8	86.0	0.81	22.4	6.0	2.7	2.5	360	70	**FD 07**	150	—	850	382	86	**FA 07**	150	850	382	88
15	**BN 160L 4**	1460	98	•	88.7	88.5	88.4	0.81	30	6.0	2.3	2.1	650	99	**FD 08**	200	—	750	725	129	**FA 08**	200	750	710	128
18.5	**BN 180M 4**	1460	121	•	89.3	89.5	89.2	0.81	37	6.2	2.6	2.5	790	115	**FD 08**	250	—	700	865	145	**FA 08**	250	700	850	144
22	**BN 180L 4**	1460	144	•	89.9	90.0	90.0	0.80	44	6.4	2.5	2.5	1250	135	**FD 09**	300	—	400	1450	175					
30	**BN 200L 4**	1460	196	•	91.4	91.7	91.0	0.80	59	7.1	2.7	2.8	1650	157	**FD 09**	400	—	300	1850	197					

○ = n.a. • = IE1

6P — 1000 min^{-1} - S1 — 50 Hz

P_n kW			n min^{-1}	M_n Nm	IE1	η (100%) %	η (75%) %	η (50%) %	cosφ	In 400V A	Is/In	Ms/Mn	Ma/Mn	J_m x 10^{-4} kgm^2	IM B5 Kg	freno c.c. FD Mod	Mb Nm	Z_o 1/h NB	Z_o 1/h SB	J_m x 10^{-4} kgm^2	IM B5 Kg	freno c.a. FA Mod	Mb Nm	Z_o 1/h	J_m x 10^{-4} kgm^2	IM B5 Kg
0.09	**BN 63A**	**6**	880	0.98	○	41.0	41.0	32.9	0.53	0.60	2.1	2.1	1.8	3.4	4.6	**FD 02**	3.5	9000	14000	4.0	6.3	**FA 02**	3.5	14000	4.0	6.1
0.12	**BN 63B**	**6**	870	1.32	○	45.0	44.0	41.8	0.60	0.64	2.1	1.9	1.7	3.7	4.9	**FD 02**	3.5	9000	14000	4.3	6.6	**FA 02**	3.5	14000	4.3	6.4
0.18	**BN 71A**	**6**	900	1.91	○	55.0	55.5	51.0	0.69	0.68	2.6	1.9	1.7	8.4	5.5	**FD 03**	5	8100	13500	9.5	8.2	**FA 03**	5.0	13500	9.5	7.9
0.25	**BN 71B**	**6**	900	2.70	○	62.0	58.5	51.4	0.71	0.82	2.6	1.9	1.7	10.9	6.7	**FD 03**	5	7800	13000	12	9.4	**FA 03**	5.0	13000	12	9.1
0.37	**BN 71C**	**6**	910	3.9	○	66.0	60.0	53.3	0.69	1.17	3.0	2.4	2.0	12.9	7.7	**FD 53**	7.5	5100	9500	14	10.4	**FA 03**	7.5	9500	14	10.1
0.37	**BN 80A**	**6**	910	3.9	○	68.0	67.4	63.3	0.68	1.15	3.2	2.2	2.0	21	9.9	**FD 04**	10	5200	8500	23	13.8	**FA 04**	10	8500	23	13.7
0.55	**BN 80B**	**6**	920	5.7	○	70.0	69.8	64.3	0.68	1.67	3.9	2.6	2.2	25	11.3	**FD 04**	15	4800	7200	27	15.2	**FA 04**	15	7200	27	15.1
0.75	**BN 80C**	**6**	920	7.8	•	70.0	70.0	64.4	0.65	2.38	3.8	2.5	2.2	28	12.2	**FD 04**	15	3400	6400	30	16.1	**FA 04**	15	6400	30	16.0
0.75	**BN 90S**	**6**	920	7.8	•	70.0	69.0	64.2	0.68	2.27	3.8	2.4	2.2	26	12.6	**FD 14**	15	3400	6500	28	16.8	**FA 14**	15	6500	28	16.7
1.1	**BN 90L**	**6**	920	11.4	•	72.9	72.6	69.1	0.69	3.2	3.9	2.3	2.0	33	15	**FD 05**	26	2700	5000	37	21	**FA 05**	26	5000	37	22
1.5	**BN 100LA**	**6**	940	15.2	•	75.2	74.2	70.3	0.72	4.0	4.1	2.1	2.0	82	22	**FD 15**	40	1900	4100	86	28	**FA 15**	40	4100	86	29
1.85	**BN 100LB**	**6**	930	19.0	•	76.6	72.8	62.6	0.73	4.8	4.6	2.1	2.0	95	24	**FD 15**	40	1700	3600	99	30	**FA 15**	40	3600	99	31
2.2	**BN 112M**	**6**	940	22	•	78.5	79.0	76.5	0.73	5.5	4.8	2.2	2.0	168	32	**FD 06S**	60	—	2100	177	42	**FA 06S**	60	2100	177	44
3	**BN 132S**	**6**	940	30	•	79.7	77.0	75.1	0.76	7.1	5.1	1.9	1.8	216	36	**FD 56**	75	—	1400	226	49	**FA 06**	75	1400	226	50
4	**BN 132MA**	**6**	950	40	•	81.4	81.5	79.5	0.77	9.2	5.5	2.0	1.8	295	45	**FD 06**	100	—	1200	305	58	**FA 07**	100	1200	318	63
5.5	**BN 132MB**	**6**	945	56	•	83.1	80.9	79.1	0.78	12.2	6.1	2.1	1.9	383	56	**FD 07**	150	—	1050	406	72	**FA 07**	150	1050	406	74
7.5	**BN 160M**	**6**	955	75	•	85.0	85.0	84.8	0.81	15.7	5.9	2.2	2.0	740	83	**FD 08**	170	—	900	815	112	**FA 08**	170	900	815	113
11	**BN 160L**	**6**	960	109	•	86.4	86.5	85.9	0.81	22.7	6.6	2.5	2.3	970	103	**FD 08**	200	—	800	1045	133	**FA 08**	200	800	1045	133
15	**BN 180L**	**6**	970	148	•	87.7	88.0	87.3	0.82	30	6.2	2.0	2.4	1550	130	**FD 09**	300	—	600	1750	170					
18.5	**BN 200LA**	**6**	960	184	•	88.6	88.0	87.3	0.81	37	5.9	2.0	2.3	1700	145	**FD 09**	400	—	450	1900	185					

○ = n.a. • = IE1

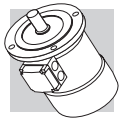

8P — 750 min-1 - S1 — 50 Hz

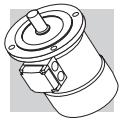

P_n kW			n min-1	M_n Nm	η %	cosφ	In 400V A	Is/In	Ms/Mn	Ma/Mn	J_m x 10^{-4} kgm²	IM B5 Kg	freno c.c. FD Mod	Mb Nm	Z_o 1/h NB	Z_o 1/h SB	J_m x 10^{-4} kgm²	IM B5 Kg	freno c.a. FA Mod	Mb Nm	Z_o 1/h	J_m x 10^{-4} kgm²	IM B5 Kg
0.09	**BN 71A**	**8**	680	1.26	47	0.59	0.47	2.3	2.4	2.3	10.9	6.7	**FD 03**	3.5	9000	16000	12.0	9.4	**FA 03**	3.5	16000	12.0	9.1
0.12	**BN 71B**	**8**	680	1.69	51	0.59	0.58	2.1	2.3	2.2	12.9	7.7	**FD 03**	5.0	9000	16000	14.0	10.4	**FA 03**	5.0	16000	14.0	10.1
0.18	**BN 80A**	**8**	690	2.49	51	0.60	0.85	2.4	2.2	2.2	15	8.2	**FD 04**	5.0	6500	11000	16.6	12.1	**FA 04**	5.0	11000	16.6	12.0
0.25	**BN 80B**	**8**	680	3.51	54	0.63	1.06	2.4	2.0	1.9	20	9.9	**FD 04**	10.0	6000	10000	22	13.8	**FA 04**	10.0	10000	23	13.7
0.37	**BN 90S**	**8**	675	5.2	58	0.60	1.53	2.6	2.3	2.1	26	12.6	**FD 14**	15.0	4800	7500	28	16.8	**FA 14**	15.0	7500	28	16.7
0.55	**BN 90L**	**8**	670	7.8	62	0.60	2.13	2.6	2.2	2.0	33	15	**FD 05**	26	4000	6400	37	21	**FA 05**	26	6400	37	22
0.75	**BN 100LA**	**8**	700	10.2	68	0.63	2.53	3.4	1.9	1.7	82	22	**FD 15**	26	2800	4800	86	28	**FA 15**	26	4800	86	29
1.1	**BN 100LB**	**8**	700	15.0	68	0.64	3.65	3.2	1.7	1.7	95	24	**FD 15**	40	2500	4000	99	30	**FA 15**	40	4000	99	31
1.5	**BN 112M**	**8**	710	20.2	71	0.66	4.6	3.7	1.8	1.9	168	32	**FD 06S**	60	—	3000	177	42	**FA 06S**	60	3000	177	44
2.2	**BN 132S**	**8**	710	29.6	75	0.66	6.4	3.8	1.8	2.0	295	45	**FD 56**	75	—	2300	305	58	**FA 06**	75	2300	305	56
3	**BN 132MA**	**8**	710	40.4	76	0.69	8.3	3.9	1.6	1.8	370	53	**FD 06**	100	—	1900	394	69	**FA 07**	100	1900	406	74

2/4P — 3000/1500 min^{-1} - S1 — 50 Hz

P_n kW			n min^{-1}	M_n Nm	η %	cosφ	In 400V A	Is/In	Ms/Mn	Ma/Mn	J_m x 10^{-4} kgm^2	IM B5 Kg	freno c.c. FD Mod	Mb Nm	Z_o 1/h NB	Z_o 1/h SB	J_m x 10^{-4} kgm^2	IM B5 Kg	freno c.a. FA Mod	Mb Nm	Z_o 1/h	J_m x 10^{-4} kgm^2	IM B5 Kg
0.20	**BN 63B**	**2**	2700	0.71	55	0.82	0.64	3.5	2.1	1.9	2.9	4.4	**FD 02**	3.5	2200	2600	3.5	6.1	**FA 02**	3.5	2600	3.5	5.9
0.15		**4**	1350	1.06	49	0.67	0.66	2.6	1.8	1.7					4000	5100					5100		
0.28	**BN 71A**	**2**	2700	0.99	56	0.82	0.88	2.9	1.9	1.7	4.7	4.4	**FD 03**	3.5	2100	2400	5.8	7.1	**FA 03**	3.5	2400	5.8	6.8
0.20		**4**	1370	1.39	59	0.72	0.68	3.1	1.8	1.7					3800	4800					4800		
0.37	**BN 71B**	**2**	2740	1.29	56	0.82	1.16	3.5	1.8	1.8	5.8	5.1	**FD 03**	5.0	1400	2100	6.9	7.8	**FA 03**	5.0	2100	6.9	7.5
0.25		**4**	1390	1.72	60	0.73	0.82	3.3	2.0	1.9					2900	4200					4200		
0.45	**BN 71C**	**2**	2780	1.55	63	0.85	1.21	3.8	1.8	1.8	6.9	5.9	**FD 03**	5.0	1400	2100	8.0	8.6	**FA 03**	5.0	2100	8.0	8.3
0.30		**4**	1400	2.0	63	0.73	0.94	3.6	2.0	1.9					2900	4200					4200		
0.55	**BN 80A**	**2**	2800	1.9	63	0.85	1.48	3.9	1.7	1.7	15	8.2	**FD 04**	5.0	1600	2300	17	12.1	**FA 04**	5.0	2300	16.6	12.0
0.37		**4**	1400	2.5	67	0.79	1.01	4.1	1.8	1.9					3000	4000					4000		
0.75	**BN 80B**	**2**	2780	2.6	65	0.85	1.96	3.8	1.9	1.8	20	9.9	**FD 04**	10	1400	1600	22	13.8	**FA 04**	10	1600	22	13.7
0.55		**4**	1400	3.8	68	0.81	1.44	3.9	1.7	1.7					2700	3600					3600		
1.1	**BN 90S**	**2**	2790	3.8	71	0.82	2.73	4.7	2.3	2.0	21	12.2	**FD 14**	10	1500	1600	23	16.4	**FA 14**	10	1600	23	16.3
0.75		**4**	1390	5.2	66	0.79	2.08	4.6	2.4	2.2					2300	2800					2800		
1.5	**BN 90L**	**2**	2780	5.2	70	0.85	3.64	4.5	2.4	2.1	28	14.0	**FD 05**	26	1050	1200	32	20	**FA 05**	26	1200	32	21
1.1		**4**	1390	7.6	73	0.81	2.69	4.7	2.5	2.2					1600	2000					2000		
2.2	**BN 100LA**	**2**	2800	7.5	72	0.85	5.2	4.5	2.0	1.9	40	18.3	**FD 15**	26	600	900	44	25	**FA 15**	26	900	44	25
1.5		**4**	1410	10.2	73	0.79	3.8	4.7	2.0	2.0					1300	2300					2300		
3.5	**BN 100LB**	**2**	2850	11.7	80	0.84	7.5	5.4	2.2	2.1	61	25	**FD 15**	40	500	900	65	31	**FA 15**	40	900	65	32
2.5		**4**	1420	16.8	82	0.80	5.5	5.2	2.2	2.2					1000	2100					2100		
4	**BN 112M**	**2**	2880	13.3	79	0.83	8.8	6.1	2.4	2.0	98	30	**FD 06S**	60	—	700	107	40	**FA 06S**	60	700	107	42
3.3		**4**	1420	22.2	80	0.80	7.4	5.1	2.1	2.0					—	1200					1200		
5.5	**BN 132S**	**2**	2890	18.2	80	0.87	11.4	5.9	2.4	2.0	213	44	**FD 56**	75	—	350	223	57	**FA 06**	75	350	223	58
4.4		**4**	1440	29	82	0.84	9.2	5.3	2.2	2.0					—	900					900		
7.5	**BN 132MA**	**2**	2900	25	82	0.87	15.2	6.5	2.4	2.0	270	53	**FD 06**	100	—	350	280	66	**FA 07**	100	350	293	71
6		**4**	1430	40	84	0.85	12.1	5.8	2.3	2.1					—	900					900		
9.2	**BN 132MB**	**2**	2920	30	83	0.86	18.6	6.0	2.6	2.2	319	59	**FD 07**	150	—	300	342	75	**FA 07**	150	300	342	77
7.3		**4**	1440	48	85	0.85	14.6	5.5	2.3	2.1					—	800					800		

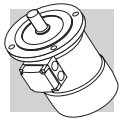

2/6P — 3000/1000 min^{-1} - S3 60/40% — 50 Hz

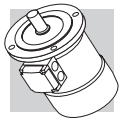

													freno c.c.						freno c.a.				
													FD						FA				
P_n kW			n min^{-1}	M_n Nm	η %	cosφ	In 400V A	Is/In	Ms/Mn	Ma/Mn	J_m x 10^{-4} kgm^2	IM B5 Kg	Mod	Mb Nm	Z_o 1/h NB	Z_o 1/h SB	J_m x 10^{-4} kgm^2	IM B5 Kg	Mod	Mb Nm	Z_o 1/h	J_m x 10^{-4} kgm^2	IM B5 Kg
0.25	**BN 71A**	**2**	2850	0.84	60	0.82	0.73	4.3	1.9	1.8	6.9	5.9	**FD 03**	1.75	1500	1700	8.0	8.6	**FA 03**	2.5	1700	8.0	8.3
0.08		**6**	910	0.84	43	0.70	0.38	2.1	1.4	1.5					10000	13000					13000		
0.37	**BN 71B**	**2**	2880	1.23	62	0.80	1.08	4.4	1.9	1.8	9.1	7.3	**FD 03**	3.5	1000	1300	10.2	10.0	**FA 03**	3.5	1300	10.2	9.7
0.12		**6**	900	1.27	44	0.73	0.54	2.4	1.4	1.5					9000	11000					11000		
0.55	**BN 80A**	**2**	2800	1.88	63	0.86	1.47	4.5	1.9	1.7	20	9.9	**FD 04**	5.0	1500	1800	22	13.8	**FA 04**	5.0	1800	22	13.7
0.18		**6**	930	1.85	52	0.65	0.77	3.3	2.0	1.9					4100	6300					6300		
0.75	**BN 80B**	**2**	2800	2.6	66	0.87	1.89	4.3	1.8	1.6	25	11.3	**FD 04**	5.0	1700	1900	27	15.2	**FA 04**	5.0	1900	27	15.1
0.25		**6**	930	2.6	54	0.67	1.00	3.2	1.7	1.8					3800	6000					6000		
1.10	**BN 90L**	**2**	2860	3.7	67	0.84	2.82	4.7	2.1	1.9	28	14.0	**FD 05**	13	1400	1600	32	20	**FA 05**	13	1600	32	21
0.37		**6**	920	3.8	59	0.71	1.27	3.3	1.6	1.6					3400	5200					5200		
1.5	**BN 100LA**	**2**	2880	5	73	0.84	3.53	5.1	1.9	2.0	40	18.3	**FD 15**	13	1000	1200	44	24	**FA 15**	13	1200	44	25
0.55		**6**	940	5.6	64	0.67	1.85	3.5	1.7	1.8					2900	4000					4000		
2.2	**BN 100LB**	**2**	2900	7.2	77	0.85	4.9	5.9	2.0	2.0	61	25	**FD 15**	26	700	900	65	31	**FA 15**	26	900	65	32
0.75		**6**	950	7.5	67	0.64	2.5	3.3	1.9	1.8					2100	3000					3000		
3	**BN 112M**	**2**	2900	9.9	78	0.87	6.4	6.3	2.0	2.1	98	30	**FD 06S**	40	—	1000	107	40	**FA 06S**	40	1000	107	32
1.1		**6**	950	11.1	72	0.64	3.4	3.9	1.8	1.8					—	2600					2600		
4.5	**BN 132S**	**2**	2910	14.8	78	0.84	9.9	5.8	1.9	1.8	213	44	**FD 56**	37	—	500	223	57	**FA 06**	37	500	223	58
1.5		**6**	960	14.9	74	0.67	4.4	4.2	1.9	2.0					—	2100					2100		
5.5	**BN 132M**	**2**	2920	18.0	78	0.87	11.7	6.2	2.1	1.9	270	53	**FD 56**	50	—	400	280	66	**FA 06**	50	400	280	67
2.2		**6**	960	22	77	0.71	5.8	4.3	2.1	2.0					—	1900					1900		

2/8P — 3000/750 min-1 - S3 60/40% — 50 Hz

													freno c.c.						freno c.a.				
													FD						FA				
P_n kW			n min-1	M_n Nm	η %	cosφ	In 400V A	Is/In	Ms/Mn	Ma/Mn	J_m x 10^{-4} kgm²	IM B5 Kg	Mod	Mb Nm	Z_o 1/h NB	Z_o 1/h SB	J_m x 10^{-4} kgm²	IM B5 Kg	Mod	Mb Nm	Z_o 1/h	J_m x 10^{-4} kgm²	IM B5 Kg
0.25	**BN 71A**	**2**	2790	0.86	61	0.87	0.68	3.9	1.8	1.9	10.9	6.7	**FD 03**	1.75	1300	1400	12	9.4	**FA 03**	2.5	1400	12	9.1
0.06		**8**	680	0.84	31	0.61	0.46	2.0	1.8	1.9					10000	13000					13000		
0.37	**BN 71B**	**2**	2800	1.26	63	0.86	0.99	3.9	1.8	1.9	12.9	7.7	**FD 03**	3.5	1200	1300	14	10.4	**FA 03**	3.5	1300	14	10.1
0.09		**8**	670	1.28	34	0.75	0.51	1.8	1.4	1.5					9500	13000					13000		
0.55	**BN 80A**	**2**	2830	1.86	66	0.86	1.40	4.4	2.1	2.0	20	9.9	**FD 04**	5.0	1500	1800	22	13.8	**FA 04**	5.0	1800	22	13.7
0.13		**8**	690	1.80	41	0.64	0.72	2.3	1.6	1.7					5600	8000					8000		
0.75	**BN 80B**	**2**	2800	2.6	68	0.88	1.81	4.6	2.1	2.0	25	11.3	**FD 04**	10	1700	1900	27	15.2	**FA 04**	10	1900	27	15.1
0.18		**8**	690	2.5	43	0.66	0.92	2.3	1.6	1.7					4800	7300					7300		
1.10	**BN 90L**	**2**	2830	3.7	63	0.84	3.00	4.5	2.1	1.9	28	14.0	**FD 05**	13	1400	1600	32	20	**FA 05**	13	1600	32	21
0.28		**8**	690	3.9	48	0.63	1.34	2.4	1.8	1.9					3400	5100					5100		
1.5	**BN 100LA**	**2**	2880	5.0	69	0.85	3.69	4.7	1.9	1.8	40	18.3	**FD 15**	13	1000	1200	44	25	**FA 15**	13	1200	44	25
0.37		**8**	690	5.1	46	0.63	1.84	2.1	1.6	1.6					3300	5000					5000		
2.4	**BN 100LB**	**2**	2900	7.9	75	0.82	5.6	5.4	2.1	2.0	61	25	**FD 15**	26	550	700	65	31	**FA 15**	26	700	65	32
0.55		**8**	700	7.5	54	0.58	2.5	2.6	1.8	1.8					2000	3500					3500		
3	**BN 112M**	**2**	2900	9.9	76	0.87	6.5	6.3	2.1	1.9	98	30	**FD 06S**	40	—	900	107	40	**FA 06S**	40	900	107	42
0.75		**8**	690	10.4	60	0.65	2.8	2.5	1.6	1.6					—	2900					2900		
4	**BN 132S**	**2**	2870	13.3	73	0.84	9.4	5.6	2.3	2.4	213	44	**FD 56**	37	—	500	223	57	**FA 06**	37	500	223	58
1		**8**	690	13.8	66	0.62	3.5	2.9	1.9	1.8					—	3500					3500		
5.5	**BN 132M**	**2**	2870	18.3	75	0.84	12.6	6.1	2.4	2.5	270	53	**FD 06**	50	—	400	280	66	**FA 06**	50	400	280	67
1.5		**8**	690	21	68	0.63	5.1	2.9	1.9	1.9					—	2400					2400		

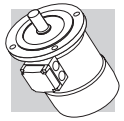

2/12P — 3000/500 min^{-1} - S3 60/40% — 50 Hz

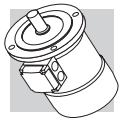

P_n kW			n min^{-1}	M_n Nm	η %	cosφ	In 400V A	Is/In	Ms/Mn	Ma/Mn	J_m x 10^{-4} kgm^2	IM B5 Kg	freno c.c. FD Mod	Mb Nm	Z_o 1/h NB	Z_o 1/h SB	J_m x 10^{-4} kgm^2	IM B5 Kg	freno c.a. FA Mod	Mb Nm	Z_o 1/h	J_m x 10^{-4} kgm^2	IM B5 Kg
0.55	**BN 80B**	**2**	2820	1.86	64	0.89	1.39	4.2	1.6	1.7	25	11.3	**FD 04**	5.0	1000	1300	27	15.2	**FA 04**	5.0	1300	27	15.1
0.09		**12**	430	2.0	30	0.63	0.69	1.8	1.9	1.8					8000	12000					12000		
0.75	**BN 90L**	**2**	2790	2.6	56	0.89	2.17	4.2	1.8	1.7	26	12.6	**FD 05**	13	1000	1150	30	18.6	**FA 05**	13	1150	30	19.3
0.12		**12**	430	2.7	26	0.63	1.06	1.7	1.4	1.6					4600	6300					6300		
1.10	**BN 100LA**	**2**	2850	3.7	65	0.85	2.87	4.5	1.6	1.8	40	18.3	**FD 15**	13	700	900	44	25	**FA 15**	13	900	44	25
0.18		**12**	430	4.0	26	0.54	1.85	1.5	1.3	1.5					4000	6000					6000		
1.5	**BN 100LB**	**2**	2900	4.9	67	0.86	3.76	5.6	1.9	1.9	54	22	**FD 15**	13	700	900	58	28	**FA 15**	13	900	58	29
0.25		**12**	440	5.4	36	0.46	2.18	1.8	1.7	1.8					3800	5000					5000		
2	**BN 112M**	**2**	2900	6.6	74	0.88	4.43	6.5	2.1	2.0	98	30	**FD 06S**	20	—	800	107	40	**FA 06S**	20	800	107	42
0.3		**12**	460	6.2	46	0.43	2.19	2.0	2.1	2.0					—	3400					3400		
3	**BN 132S**	**2**	2920	9.8	74	0.87	6.7	6.8	2.3	1.9	213	44	**FD 56**	37	—	450	223	57	**FA 06**	37	450	223	58
0.5		**12**	470	10.2	51	0.43	3.3	2.0	1.7	1.6					—	3000					3000		
4	**BN 132M**	**2**	2920	13.1	75	0.89	8.6	5.9	2.4	2.3	270	53	**FD 56**	37	—	400	280	66	**FA 06**	37	400	280	67
0.7		**12**	460	14.5	53	0.44	4.3	1.9	1.7	1.6					—	2800					2800		

4/6P — 1500/1000 min^{-1} - S1 — 50 Hz

P_n kW			n min^{-1}	M_n Nm	η %	cosφ	In 400V A	Is/In	Ms/Mn	Ma/Mn	J_m x 10^{-4} kgm^2	IM B5 Kg	freno c.c. FD: Mod	Mb Nm	Z_o 1/h NB	Z_o 1/h SB	J_m x 10^{-4} kgm^2	IM B5 Kg	freno c.a. FA: Mod	Mb Nm	Z_o 1/h	J_m x 10^{-4} kgm^2	IM B5 Kg
0.22	**BN 71B**	**4**	1410	1.5	64	0.74	0.67	3.9	1.8	1.9	9.1	7.3	**FD 03**	3.5	2500	3500	10.2	10.0	**FA 03**	3.5	3500	10.2	9.7
0.13		**6**	920	1.4	43	0.67	0.65	2.3	1.6	1.7					5000	9000					9000		
0.30	**BN 80A**	**4**	1410	2.0	61	0.82	0.87	3.5	1.3	1.5	15	8.2	**FD 04**	5.0	2500	3100	16.6	12.1	**FA 04**	5.0	3100	16.6	12.0
0.20		**6**	930	2.1	54	0.66	0.81	3.2	1.9	2.0					4000	6000					6000		
0.40	**BN 80B**	**4**	1430	2.7	63	0.75	1.22	3.9	1.8	1.8	20	9.9	**FD 04**	10	1800	2300	22	13.8	**FA 04**	10	2300	22	13.7
0.26		**6**	930	2.7	55	0.70	0.97	2.7	1.5	1.6					3600	5500					5500		
0.55	**BN 90S**	**4**	1420	3.7	70	0.78	1.45	4.5	2.0	1.9	21	12.2	**FD 14**	10	1500	2100	23	16.1	**FA 14**	10	2100	23	16.3
0.33		**6**	930	3.4	62	0.70	1.10	3.7	2.3	2.0					2500	4100					4100		
0.75	**BN 90L**	**4**	1420	5.0	74	0.78	1.88	4.3	1.9	1.8	28	14	**FD 05**	13	1400	2000	32	20	**FA 05**	13	2000	32	21
0.45		**6**	920	4.7	66	0.71	1.39	3.3	2.0	1.9					2300	3600					3600		
1.1	**BN 100LA**	**4**	1450	7.2	74	0.79	2.72	5.0	1.7	1.9	82	22	**FD 15**	26	1400	2000	86	28	**FA 15**	26	2000	86	29
0.8		**6**	950	8.0	65	0.69	2.57	4.1	1.9	2.1					2100	3300					3300		
1.5	**BN 100LB**	**4**	1450	9.9	75	0.79	3.65	5.1	1.7	1.9	95	25	**FD 15**	26	1300	1800	99	31	**FA 15**	26	1800	99	32
1.1		**6**	950	11.1	72	0.68	3.24	4.3	2.0	2.1					2000	3000					3000		
2.3	**BN 112M**	**4**	1450	15.2	75	0.78	5.7	5.2	1.8	1.9	168	32	**FD 06S**	40	—	1600	177	42	**FA 06S**	40	1600	177	44
1.5		**6**	960	14.9	73	0.72	4.1	4.9	2.0	2.0					—	2400					2400		
3.1	**BN 132S**	**4**	1460	20	83	0.83	6.5	5.9	2.1	2.0	213	44	**FD 56**	37	—	1200	223	57	**FA 06**	37	1200	223	58
2		**6**	960	20	77	0.75	4.9	4.5	2.1	2.1					—	1900					1900		
4.2	**BN 132MA**	**4**	1460	27	84	0.82	8.8	5.9	2.1	2.2	270	53	**FD 06**	50	—	900	280	66	**FA 06**	50	900	280	67
2.6		**6**	960	26	79	0.72	6.6	4.3	2.0	2.0					—	1500					1500		

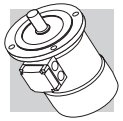

4/8P — 1500/750 min^{-1} - S1 — 50 Hz

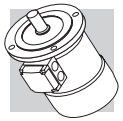

P_n kW			n min^{-1}	M_n Nm	η %	cosφ	In 400V A	Is/In	Ms/Mn	Ma/Mn	J_m x 10^{-4} kgm^2	IM B5 Kg	freno c.c. FD Mod	Mb Nm	Z_o 1/h NB	Z_o 1/h SB	J_m x 10^{-4} kgm^2	IM B5 Kg	freno c.a. FA Mod	Mb Nm	Z_o 1/h	J_m x 10^{-4} kgm^2	IM B5 Kg
0.37	**BN 80A**	**4**	1400	2.5	63	0.82	1.03	3.3	1.4	1.4	15	8.2	**FD 04**	10	2300	3500	16.6	12.1	**FA 04**	10	3500	16.6	12.0
0.18		**8**	690	2.5	44	0.60	0.98	2.2	1.5	1.6					4500	7000					7000		
0.55	**BN 80B**	**4**	1390	3.8	65	0.86	1.42	3.8	1.7	1.6	20	9.9	**FD 04**	10	2200	2900	22	13.8	**FA 04**	10	2900	22	13.7
0.30		**8**	670	4.3	49	0.65	1.36	2.3	1.7	1.8					4200	6500					6500		
0.65	**BN 90S**	**4**	1390	4.5	73	0.85	1.51	4.0	1.9	1.9	28	13.6	**FD 14**	15	2300	2800	30	17.8	**FA 14**	15	2800	30	17.7
0.35		**8**	690	4.8	49	0.57	1.81	2.5	2.1	2.2					3500	6000					6000		
0.9	**BN 90L**	**4**	1370	6.3	73	0.87	2.05	3.8	1.8	1.8	30	15.1	**FD 05**	26	1700	2100	34	21	**FA 05**	26	2100	34	22
0.5		**8**	670	7.1	57	0.62	2.04	2.4	2.1	2.0					2500	4200					4200		
1.30	**BN 100LA**	**4**	1420	8.7	72	0.83	3.14	4.3	1.7	1.8	82	22	**FD 15**	40	1300	1700	86	28	**FA 15**	40	1700	86	29
0.70		**8**	700	9.6	58	0.64	2.72	2.8	1.8	1.8					2000	3400					3400		
1.8	**BN 100LB**	**4**	1420	12.1	69	0.87	4.3	4.2	1.6	1.7	95	25	**FD 15**	40	1200	1700	99	31	**FA 15**	40	1700	99	32
0.9		**8**	700	12.3	62	0.63	3.3	3.2	1.7	1.8					1600	2600					2600		
2.2	**BN 112M**	**4**	1440	14.6	77	0.85	4.9	5.3	1.8	1.8	168	32	**FD 06S**	60	—	1200	177	42	**FA 06S**	60	1200	177	43
1.2		**8**	710	16.1	70	0.63	3.9	3.3	1.9	1.8					—	2000					2000		
3.6	**BN 132S**	**4**	1440	24	80	0.82	7.9	6.5	2.1	1.9	295	45	**FD 56**	75	—	1000	305	58	**FA 06**	75	1000	305	59
1.8		**8**	720	24	72	0.55	6.6	4.6	1.9	2.0					—	1400					1400		
4.6	**BN 132M**	**4**	1450	30	81	0.83	9.9	6.5	2.2	1.9	383	56	**FD 06**	100	—	1000	393	69	**FA 07**	100	1000	406	74
2.3		**8**	720	31	73	0.54	8.4	4.4	2.3	2.0					—	1300					1300		

2P — 3000 min^{-1} - S1 — 50 Hz

P_n kW			n min^{-1}	M_n Nm	IE1	η (100%) %	η (75%) %	η (50%) %	cosφ	In 400V A	Is/In	Ms/Mn	Ma/Mn	J_m x 10^{-4} kgm^2	IM B5 Kg	freno c.c. FD Mod	Mb Nm	Z_o 1/h NB	Z_o 1/h SB	J_m x 10^{-4} kgm^2	IM B5 Kg	freno c.a. FA Mod	Mb Nm	Z_o 1/h	J_m x 10^{-4} kgm^2	IM B5 Kg
0.18	**M 05A**	**2**	2730	0.63	○	59.9	56.9	51.9	0.77	0.56	3.0	2.1	2.0	2.0	3.2	**FD 02**	1.75	3900	4800	2.6	4.9	**FA 02**	1.75	4800	2.6	4.7
0.25	**M 05B**	**2**	2740	0.87	○	66.0	64.8	64.8	0.76	0.72	3.3	2.3	2.3	2.3	3.6	**FD 02**	1.75	3900	4800	3.0	5.3	**FA 02**	1.75	4800	3.0	5.1
0.37	**M 05C**	**2**	2800	1.26	○	69.1	66.8	66.8	0.78	0.99	3.9	2.6	2.6	3.3	4.8	**FD 02**	3.5	3600	4500	3.9	6.5	**FA 02**	3.5	4500	3.9	6.3
0.55	**M 1SD**	**2**	2820	1.86	○	76.0	75.8	74.8	0.76	1.37	5.0	2.9	2.8	4.1	5.8	**FD 03**	5	2900	4200	5.3	8.5	**FA 03**	5	4200	5.3	8.2
0.75	**M 1LA**	**2**	2810	2.6	○	76.6	76.2	76.2	0.76	1.86	5.1	3.1	2.8	5.0	6.9	**FD 03**	5	1900	3300	6.1	9.6	**FA 03**	5	3300	6.1	9.3
1.1	**M 2SA**	**2**	2800	3.8	•	76.4	76.2	75.0	0.81	2.57	4.8	2.8	2.4	9.0	8.8	**FD 04**	10	1500	3000	10.6	11.9	**FA 04**	10	3000	10.6	12.6
1.5	**M 2SB**	**2**	2800	5.1	•	79.1	79.5	77.2	0.81	3.4	4.9	2.7	2.4	11.4	10.6	**FD 04**	15	1300	2600	13.0	9.9	**FA 04**	15	2600	13.0	14.4
2.2	**M 3SA**	**2**	2880	7.3	•	82.7	82.1	81.0	0.80	4.8	6.3	2.9	2.7	24	15.5	**FD 15**	26	1100	2400	28	22	**FA 15**	26	2400	28	23
3	**M 3LA**	**2**	2860	10.0	•	81.5	81.3	77.4	0.79	6.7	5.6	2.6	2.2	31	18.7	**FD 15**	26	700	1600	35	25	**FA 15**	26	1600	35	26
4	**M 3LB**	**2**	2870	13.3	•	83.1	83.0	77.8	0.80	8.7	5.8	2.7	2.5	39	22	**FD 15**	40	450	900	43	28	**FA 15**	40	900	43	29
5.5	**M 4SA**	**2**	2890	18.2	•	84.7	84.5	81.2	0.84	11.2	5.9	2.6	2.2	101	33	**FD 06**	50	—	600	112	46	**FA 06**	50	600	112	47
7.5	**M 4SB**	**2**	2900	25	•	86.5	86.3	84.4	0.85	14.7	6.4	2.6	2.2	145	40	**FD 06**	50	—	550	154	53	**FA 06**	50	550	154	54
9.2	**M 4LA**	**2**	2930	30	•	87.0	86.5	83.6	0.86	17.7	6.7	2.8	2.3	178	51	**FD 56**	75	—	430	189	64	**FA 06**	75	430	189	65
11	**M 4LC**	**2**	2920	36	•	87.6	87.0	86.0	0.88	20.6	6.9	2.9	2.5	210	60											
15	**M 5SB**	**2**	2930	49	•	89.6	89.4	88.0	0.86	28.1	7.1	2.6	2.3	340	70											
18.5	**M 5SC**	**2**	2930	60	•	90.4	90.1	89.0	0.86	34	7.6	2.7	2.3	420	83											
22	**M 5LA**	**2**	2930	72	•	89.9	89.7	89.5	0.88	40	7.8	2.6	2.4	490	95											

○ = n.a. • = IE1

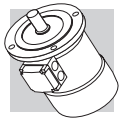

4P — 1500 min^{-1} - S1 — 50 Hz

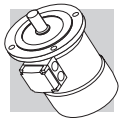

P_n kW			n min^{-1}	M_n Nm	IE1	η (100%) %	η (75%) %	η (50%) %	cosφ	In 400V A	Is/In	Ms/Mn	Ma/Mn	J_m x 10^{-4} kgm^2	IM B5 Kg	freno c.c. FD Mod	Mb Nm	Z_o 1/h NB	Z_o 1/h SB	J_m x 10^{-4} kgm^2	IM B5 Kg	freno c.a. FA Mod	Mb Nm	Z_o 1/h	J_m x 10^{-4} kgm^2	IM B5 Kg
0.09	**M 0B**	**4**	1350	0.64	○	51.7	47.6	42.9	0.60	0.42	2.6	2.5	2.4	1.5	2.9											
0.12	**M 05A**	**4**	1350	0.85	○	59.8	56.2	47.0	0.62	0.47	2.6	1.9	1.8	2.0	3.2	**FD 02**	1.75	10000	13000	2.6	4.9	**FA 02**	1.75	13000	2.6	4.7
0.18	**M 05B**	**4**	1320	1.30	○	54.8	52.9	52.5	0.67	0.71	2.6	2.2	2.0	2.3	3.6	**FD 02**	3.5	10000	13000	3.0	5.3	**FA 02**	3.5	13000	3.0	5.1
0.25	**M 05C**	**4**	1340	1.78	○	65.3	65.0	57.9	0.69	0.80	2.7	2.1	1.9	3.3	4.8	**FD 02**	3.5	7800	10000	3.9	6.5	**FA 02**	3.5	10000	3.9	6.3
0.37	**M 1SD**	**4**	1370	2.6	○	66.8	66.7	63.0	0.76	1.05	3.7	2.0	1.9	6.9	5.5	**FD 03**	5	6000	9400	8.0	8.2	**FA 03**	5	9400	8.0	7.9
0.55	**M 1LA**	**4**	1380	3.8	○	69.0	68.9	68.8	0.74	1.55	4.1	2.3	2.3	9.1	6.9	**FD 53**	7.5	4300	8700	10.2	9.6	**FA 03**	7.5	8700	10.2	9.3
0.75	**M 2SA**	**4**	1400	5.1	•	75.0	74.5	69.3	0.78	1.85	4.9	2.7	2.5	20	9.2	**FD 04**	15	4100	7800	22	13.1	**FA 04**	15	7800	22	13.0
1.1	**M 2SB**	**4**	1400	7.5	•	76.4	76.2	70.4	0.78	2.66	5.1	2.8	2.5	25	10.6	**FD 04**	15	2600	5300	27	14.5	**FA 04**	15	5300	27	14.4
1.5	**M 3SA**	**4**	1410	10.2	•	79.6	80.5	79.3	0.77	3.5	4.6	2.1	2.1	34	15.5	**FD 15**	26	2800	4900	38	22	**FA 15**	26	4900	38	23
2.2	**M 3LA**	**4**	1410	14.9	•	81.1	81.4	79.9	0.75	5.2	4.5	2.2	2.0	40	17	**FD 15**	40	2600	4700	44	24	**FA 15**	40	4700	44	24
3	**M 3LB**	**4**	1410	20	•	82.6	83.8	83.7	0.77	6.8	5.0	2.3	2.2	54	21	**FD 15**	40	2400	4400	58	27	**FA 15**	40	4400	58	28
4	**M 3LC**	**4**	1400	27	○	82.7	83.1	80.5	0.78	9.0	4.7	2.3	2.2	61	23	**FD 55**	55	—	1300	65	29	**FA 15**	40	1300	65	30
5.5	**M 4SA**	**4**	1440	36	•	84.7	84.8	82.5	0.81	11.6	5.5	2.3	2.2	213	42	**FD 56**	75	—	1050	223	55	**FA 06**	75	1050	223	56
7.5	**M 4LA**	**4**	1440	50	•	86.0	86.3	85.3	0.81	15.5	5.7	2.5	2.4	270	51	**FD 06**	100	—	950	280	64	**FA 07**	100	950	280	65
9.2	**M 4LB**	**4**	1440	61	•	88.4	88.6	87.5	0.81	18.8	5.9	2.7	2.5	319	57	**FD 07**	150	—	900	342	73	**FA 07**	150	900	342	75
11	**M 4LC**	**4**	1440	73	•	87.6	87.8	86.0	0.81	22.4	6.0	2.7	2.5	360	65	**FD 07**	150	—	850	382	81	**FA 07**	150	850	382	83
15	**M 5SB**	**4**	1460	98	•	88.7	88.5	88.4	0.81	30.1	6.0	2.3	2.1	650	85	**FD 08**	200	—	750	725	115	**FA 08**	200	750	710	114
18.5	**M 5LA**	**4**	1460	121	•	89.3	89.5	89.2	0.81	37	6.2	2.6	2.5	790	101	**FD 08**	250	—	700	865	131	**FA 08**	250	700	850	130

○ = n.a. • = IE1

6P — 1000 min^{-1} - S1 — 50 Hz

P_n kW			n min^{-1}	M_n Nm	IE1	η (100%) %	η (75%) %	η (50%) %	cosφ	In 400V A	Is/In	Ms/Mn	Ma/Mn	J_m x 10^{-4} kgm^2	IM B5 Kg	freno c.c. FD Mod	Mb Nm	Z_o 1/h NB	Z_o 1/h SB	J_m x 10^{-4} kgm^2	IM B5 Kg	freno c.a. FA Mod	Mb Nm	Z_o 1/h	J_m x 10^{-4} kgm^2	IM B5 Kg
0.09	**M 05A**	**6**	880	0.98	○	41.0	41.0	32.9	0.53	0.60	2.1	2.1	1.8	3.4	4.3	**FD 02**	3.5	9000	14000	4.0	6.0	**FA 02**	3.5	14000	4.0	5.8
0.12	**M 05B**	**6**	870	1.32	○	45.0	44.0	41.8	0.60	0.64	2.1	1.9	1.7	3.7	4.6	**FD 02**	3.5	9000	14000	4.3	6.3	**FA 02**	3.5	14000	4.3	6.1
0.18	**M 1SC**	**6**	900	1.91	○	55.0	55.5	51.0	0.69	0.68	2.6	1.9	1.7	8.4	5.1	**FD 03**	5	8100	13500	9.5	7.8	**FA 03**	5	13500	9.5	7.5
0.25	**M 1SD**	**6**	900	2.7	○	62.0	58.5	51.4	0.71	0.82	2.6	1.9	1.7	10.9	6.3	**FD 03**	5	7800	13000	12	9.0	**FA 03**	5	13000	12	8.7
0.37	**M 1LA**	**6**	910	3.9	○	66.0	60.0	53.3	0.69	1.17	3.0	2.4	2.0	12.9	7.3	**FD 53**	7.5	5100	9500	14	10.0	**FA 03**	7.5	9500	14	9.7
0.55	**M 2SA**	**6**	920	5.7	○	70.0	69.8	64.3	0.68	1.67	3.9	2.6	2.2	25	10.6	**FD 04**	15	4800	7200	27	14.5	**FA 04**	15	7200	27	14.4
0.75	**M 2SB**	**6**	920	7.8	•	70.0	70.0	64.4	0.65	2.38	3.8	2.5	2.2	28	11.5	**FD 04**	15	3400	6400	30	15.4	**FA 04**	15	6400	30	15.3
1.1	**M 3SA**	**6**	920	11.4	•	75.0	74.0	72.0	0.72	2.9	4.3	2.0	1.8	33	17	**FD 15**	26	2700	5000	37	23	**FA 15**	26	5000	37	24
1.5	**M 3LA**	**6**	940	15.2	•	75.2	74.2	70.3	0.72	4.0	4.1	2.1	2.0	82	21	**FD 15**	40	1900	4100	86	27	**FA 15**	40	4100	86	28
1.85	**M 3LB**	**6**	930	19.0	•	76.6	72.8	62.6	0.73	4.8	4.6	2.1	2.0	95	23	**FD 15**	40	1700	3600	99	29	**FA 15**	40	3600	99	30
2.2	**M 3LC**	**6**	930	23	•	77.7	76.8	72.4	0.71	5.8	4.7	2.3	2.1	95	23	**FD 55**	55	—	1900	99	29	**FA 15**	40	1900	99	30
3	**M 4SA**	**6**	940	30	•	79.7	77.0	75.1	0.76	7.1	5.1	1.9	1.8	216	34	**FD 56**	75	—	1400	226	47	**FA 06**	75	1400	226	48
4	**M 4LA**	**6**	950	40	•	81.4	81.5	79.5	0.77	9.2	5.5	2.0	1.8	295	43	**FD 06**	100	—	1200	305	56	**FA 07**	100	1200	305	57
5.5	**M 4LB**	**6**	945	56	•	83.1	80.9	79.1	0.78	12.2	6.1	2.1	1.9	383	54	**FD 07**	150	—	1050	406	70	**FA 07**	150	1050	406	72
7.5	**M 5SA**	**6**	955	75	•	85.0	85.0	84.8	0.81	15.7	5.9	2.2	2.0	740	69	**FD 08**	170	—	900	815	98	**FA 08**	170	900	800	98
11	**M 5SB**	**6**	960	109	•	86.4	86.5	85.9	0.81	22.7	6.6	2.5	2.3	970	89	**FD 08**	200	—	800	1045	119	**FA 08**	200	800	1030	118

○ = n.a. • = IE1

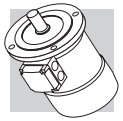

2/4P — 3000/1500 min^{-1} - S1 — 50 Hz

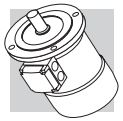

P_n kW			n min^{-1}	M_n Nm	η %	cosφ	In 400V A	Is/In	Ms/Mn	Ma/Mn	J_m x 10^{-4} kgm^2	IM B5 Kg	freno c.c. FD Mod	Mb Nm	Z_o 1/h NB	Z_o 1/h SB	J_m x 10^{-4} kgm^2	IM B5 Kg	freno c.a. FA Mod	Mb Nm	Z_o 1/h	J_m x 10^{-4} kgm^2	IM B5 Kg
0.20	**M 05A**	**2**	2700	0.71	55	0.82	0.64	3.5	2.1	1.9	2.9	4.1	**FD 02**	3.5	2200	2600	3.5	5.8	**FA 02**	3.5	2600	3.5	5.6
0.15		**4**	1350	1.06	49	0.67	0.66	2.6	1.8	1.7					4000	5100					5100		
0.28	**M 1SB**	**2**	2700	0.99	56	0.82	0.88	2.9	1.9	1.7	4.7	4.0	**FD 03**	3.5	2100	2400	5.8	6.7	**FA 03**	3.5	2400	5.8	6.4
0.20		**4**	1370	1.39	59	0.68	1.02	3.1	1.8	1.7					3800	4800					4800		
0.37	**M 1SC**	**2**	2740	1.29	56	0.82	1.16	3.5	1.8	1.8	5.8	4.7	**FD 03**	5	1400	2100	6.9	7.4	**FA 03**	5	2100	6.9	7.1
0.25		**4**	1390	1.72	60	0.73	0.82	3.3	2.0	1.9					2900	4200					4200		
0.45	**M 1SD**	**2**	2780	1.55	63	0.85	1.21	3.8	1.8	1.8	6.9	5.5	**FD 03**	5	1400	2100	8.0	8.2	**FA 03**	5	2100	8.0	7.9
0.30		**4**	1400	2.0	63	0.74	0.93	3.8	2.1	1.9					2900	4200					4200		
0.55	**M 1LA**	**2**	2800	1.9	73	0.79	1.38	4.2	2.0	1.8	9.1	6.9	**FD 03**	5	1600	2200	10.2	9.6	**FA 03**	5	2200	10.2	9.3
0.37		**4**	1400	2.5	68	0.72	1.09	3.9	2.2	2.0					3300	4600					4600		
0.75	**M 2SA**	**2**	2780	2.6	65	0.85	1.96	3.8	1.9	1.8	20	9.2	**FD 04**	10	1400	1600	22	13.1	**FA 04**	10	1600	22	13.0
0.55		**4**	1400	3.8	68	0.81	1.44	3.9	1.7	1.7					2700	3600					3600		
1.1	**M 2SB**	**2**	2730	3.9	65	0.86	2.84	3.9	2.0	1.9	25	10.7	**FD 04**	10	1200	1500	27	14.5	**FA 04**	10	1500	27	14.5
0.75		**4**	1410	5.1	75	0.81	1.78	4.5	2.1	2.0					2300	3100					3100		
1.5	**M 3SA**	**2**	2830	5.1	74	0.83	3.5	4.7	2.1	2.0	34	15.5	**FD 15**	26	700	1000	38	22	**FA 15**	26	1000	38	23
1.1		**4**	1420	7.4	77	0.78	2.6	4.3	2.1	2.0					1600	2600					2600		
2.2	**M 3LA**	**2**	2800	7.5	72	0.85	5.2	4.5	2.0	1.9	40	17	**FD 15**	26	600	900	44	24	**FA 15**	26	900	44	24
1.5		**4**	1410	10.2	73	0.79	3.8	4.7	2.0	2.0					1300	2300					2300		
3.5	**M 3LB**	**2**	2850	11.7	80	0.84	7.5	5.4	2.2	2.1	61	23	**FD 15**	40	500	900	65	29	**FA 15**	40	900	65	30
2.5		**4**	1420	16.8	82	0.80	5.5	5.2	2.2	2.2					1000	2100					2100		
4.8	**M 4 SA**	**2**	2900	15.8	81	0.88	9.7	6.0	2.0	1.9	213	42	**FD 06**	50	—	400	233	55	**FA 06**	50	400	233	56
3.8		**4**	1430	25.4	81	0.84	8.1	5.2	2.1	2.1					—	950					950		
5.5	**M 4SB**	**2**	2890	18.2	80	0.87	11.4	5.9	2.4	2.0	213	42	**FD 56**	75	—	350	223	55	**FA 06**	75	350	223	56
4.4		**4**	1440	29	82	0.84	9.2	5.3	2.2	2.0					—	900					900		
7.5	**M 4LA**	**2**	2900	25	82	0.87	15.2	6.5	2.4	2.0	270	51	**FD 06**	100	—	350	280	64	**FA 07**	100	350	280	65
6		**4**	1430	40	84	0.85	12.1	5.8	2.3	2.1					—	950					950		
9.2	**M 4LB**	**2**	2920	30	83	0.86	18.6	6.0	2.6	2.2	319	57	**FD 07**	150	—	300	342	73	**FA 07**	150	300	342	75
7.3		**4**	1440	48	85	0.85	14.6	5.5	2.3	2.1					—	800					800		

2/6P — 3000/1000 min^{-1} - S3 60/40% — 50 Hz

													freno c.c.						freno c.a.				
													FD						FA				
P_n kW			n min^{-1}	M_n Nm	η %	cosφ	In 400V A	Is/In	Ms/Mn	Ma/Mn	J_m x 10^{-4} kgm^2	IM B5 Kg	Mod	Mb Nm	Z_o 1/h NB	Z_o 1/h SB	J_m x 10^{-4} kgm^2	IM B5 Kg	Mod	Mb Nm	Z_o 1/h	J_m x 10^{-4} kgm^2	IM B5 Kg
0.25	M 1SA	2	2850	0.84	60	0.82	0.73	4.3	1.9	1.8	6.9	5.5	FD 03	1.75	1500	1700	8.0	8.2	FA 03	1.75	1700	8.0	7.9
0.08		6	910	0.84	43	0.70	0.38	2.1	1.4	1.5					10000	13000					13000		
0.37	M 1LA	2	2880	1.23	62	0.80	1.08	4.4	1.9	1.8	9.1	6.9	FD 03	3.5	1000	1300	10.2	9.6	FA 03	3.5	1300	10.2	9.3
0.12		6	900	1.27	44	0.73	0.54	2.4	1.4	1.5					9000	11000					11000		
0.55	M 2SA	2	2800	1.88	63	0.86	1.47	4.5	1.9	1.7	20	9.2	FD 04	5	1500	1800	22	13.1	FA 04	5	1800	22	13.0
0.18		6	930	1.85	52	0.65	0.77	3.3	2.0	1.9					4100	6300					6300		
0.75	M 2SB	2	2800	2.6	66	0.87	1.89	4.3	1.8	1.6	25	10.6	FD 04	5	1700	1900	27	14.5	FA 04	5	1900	27	14.4
0.25		6	930	2.6	54	0.67	1.00	3.2	1.7	1.8					3800	6000					6000		
1.1	M 3SA	2	2870	3.7	71	0.82	2.73	4.9	1.8	1.9	34	15.5	FD 15	13	1000	1300	38	22	FA 15	13	1300	38	23
0.37		6	930	3.8	63	0.70	1.21	3.1	1.5	1.8					3500	5000					5000		
1.5	M 3LA	2	2880	5.0	73	0.84	3.53	5.1	1.9	2.0	40	17	FD 15	13	1000	1200	44	24	FA 15	13	1200	44	24
0.55		6	940	5.6	64	0.67	1.85	3.5	1.7	1.8					2900	4000					4000		
2.2	M 3LB	2	2900	7.2	77	0.85	4.9	5.9	2.0	2.0	61	23	FD 15	26	700	900	65	29	FA 15	26	900	65	30
0.75		6	950	7.5	67	0.64	2.5	3.3	1.9	1.8					2100	3000					3000		
3	M 4SA	2	2910	9.9	74	0.88	6.6	5.6	2.0	2.1	170	36	FD 56	37	—	600	182	48	FA 06	37	600	182	50
1.1		6	960	10.9	73	0.68	3.2	4.5	2.2	2.0					—	2200					2200		
4.5	M 4SB	2	2910	14.8	78	0.84	9.9	5.8	1.9	1.8	213	42	FD 56	37	—	500	223	55	FA 06	37	500	223	56
1.5		6	960	14.9	74	0.67	4.4	4.2	1.9	2.0					—	2100					2100		
5.5	M 4LA	2	2920	18.0	78	0.87	11.7	6.2	2.1	1.9	270	51	FD 06	50	—	400	280	64	FA 06	50	400	280	65
2.2		6	960	22	77	0.71	5.8	4.3	2.1	2.0					—	1900					1900		

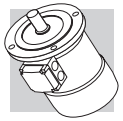

2/8P — 3000/750 min^{-1} - S3 60/40% — 50 Hz

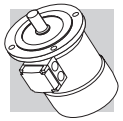

													freno c.c.						freno c.a.				
													FD						FA				
P_n kW			n min^{-1}	M_n Nm	η %	cosφ	In 400V A	Is/In	Ms/Mn	Ma/Mn	J_m x 10^{-4} kgm^2	IM B5 Kg	Mod	Mb Nm	Z_o 1/h NB	Z_o 1/h SB	J_m x 10^{-4} kgm^2	IM B5 Kg	Mod	Mb Nm	Z_o 1/h	J_m x 10^{-4} kgm^2	IM B5 Kg
0.37	**M 1LA**	**2**	2800	1.26	63	0.86	0.99	3.9	1.8	1.9	12.9	7.3	**FD 03**	3.5	1200	1300	14	10.0	**FA 03**	3.5	1300	14	9.7
0.09		**8**	670	1.28	34	0.75	0.51	1.8	1.4	1.5					9500	13000					13000		
0.55	**M 2SA**	**2**	2830	1.86	66	0.86	1.40	4.4	2.1	2.0	20	9.2	**FD 04**	5	1500	1800	22	13.1	**FA 04**	5	1800	22	13.0
0.13		**8**	690	1.80	41	0.64	0.72	2.3	1.6	1.7					5600	8000					8000		
0.75	**M 2SB**	**2**	2800	2.6	68	0.88	1.81	4.6	2.1	2.0	25	10.6	**FD 04**	10	1700	1900	27	14.5	**FA 04**	10	1900	27	14.4
0.18		**8**	690	2.5	43	0.66	0.92	2.3	1.6	1.7					4800	7300					7300		
1.1	**M 3SA**	**2**	2870	3.7	69	0.84	2.74	4.6	1.8	1.7	34	15.5	**FD 15**	13	1000	1300	38	22	**FA 15**	13	1300	38	23
0.28		**8**	690	3.9	44	0.56	1.64	2.3	1.4	1.7					3400	5000					5000		
1.5	**M 3LA**	**2**	2880	5.0	69	0.85	3.69	4.7	1.9	1.8	40	17	**FD 15**	13	1000	1200	44	24	**FA 15**	13	1200	44	24
0.37		**8**	690	5.1	46	0.63	1.84	2.1	1.6	1.6					3300	5000					5000		
2.4	**M 3LB**	**2**	2900	7.9	75	0.82	5.6	5.4	2.1	2.0	61	23	**FD 15**	26	550	700	65	29	**FA 15**	26	700	65	30
0.55		**8**	700	7.5	54	0.58	2.5	2.6	1.8	1.8					2000	3500					3500		
3	**M 4SA**	**2**	2920	9.8	72	0.85	7.1	5.6	2.0	1.8	162	36	**FD 56**	37	—	600	182	48	**FA 06**	37	600	182	50
0.75		**8**	710	10.1	61	0.64	2.8	3.0	1.7	1.8					—	3400					3400		
4	**M 4SB**	**2**	2870	13.3	73	0.84	9.4	5.6	2.3	2.4	213	42	**FD 56**	37	—	500	223	55	**FA 06**	37	500	223	56
1		**8**	690	13.8	66	0.62	3.5	2.9	1.9	1.8					—	3500					3500		
5.5	**M 4LA**	**2**	2870	18.3	75	0.84	12.6	6.1	2.4	2.5	270	51	**FD 06**	50	—	400	280	64	**FA 06**	50	400	280	65
1.5		**8**	690	21	68	0.63	5.1	2.9	1.9	1.9					—	2400					2400		

2/12P — 3000/500 min^{-1} - S3 60/40% — 50 Hz

													freno c.c.						freno c.a.				
													FD						FA				
P_n kW			n min^{-1}	M_n Nm	η %	cosφ	In 400V A	Is/In	Ms/Mn	Ma/Mn	J_m x 10^{-4} kgm^2	IM B5 Kg	Mod	Mb Nm	Z_o 1/h NB	Z_o 1/h SB	J_m x 10^{-4} kgm^2	IM B5 Kg	Mod	Mb Nm	Z_o 1/h	J_m x 10^{-4} kgm^2	IM B5 Kg
0.55	**M 2SA**	**2**	2820	1.86	64	0.89	1.39	4.2	1.6	1.7	25	10.6	**FD 04**	5	1000	1300	27	14.5	**FA 04**	5	1300	27	14.4
0.09		**12**	430	2.0	30	0.63	0.69	1.8	1.9	1.8					8000	12000					12000		
0.75	**M 3SA**	**2**	2900	2.5	65	0.81	2.06	5.2	1.9	2.1	34	15.5	**FD 15**	13	700	900	38	22	**FA 15**	13	900	38	23
0.12		**12**	460	2.5	33	0.43	1.22	1.9	1.3	1.6					5000	7000					7000		
1.1	**M 3LA**	**2**	2850	3.7	65	0.85	2.87	4.5	1.6	1.8	40	17	**FD 15**	13	700	900	44	24	**FA 15**	13	900	44	24
0.18		**12**	430	4.0	26	0.54	1.85	1.5	1.3	1.5					4000	6000					6000		
1.5	**M 3LB**	**2**	2900	4.9	67	0.86	3.76	5.6	1.9	1.9	54	21	**FD 15**	13	700	900	58	27	**FA 15**	13	900	58	28
0.25		**12**	440	5.4	36	0.46	2.18	1.8	1.7	1.8					3800	5000					5000		
2	**M 3LC**	**2**	2850	6.7	70	0.84	4.9	4.9	1.8	1.7	61	23	**FD 55**	18	—	700	65	29	**FA 15**	18	700	65	30
0.3		**12**	450	6.4	38	0.47	2.4	1.7	1.6	1.7					—	3500					3500		
3	**M 4SA**	**2**	2920	9.8	74	0.87	6.7	6.8	2.3	1.9	213	42	**FD 56**	37	—	450	223	55	**FA 06**	37	450	223	56
0.5		**12**	470	10.2	51	0.43	3.3	2.0	1.7	1.6					—	3000					3000		
4	**M 4LA**	**2**	2920	13.1	75	0.89	8.6	5.9	2.4	2.3	270	51	**FD 56**	37	—	400	280	64	**FA 06**	37	400	280	65
0.7		**12**	460	14.5	53	0.44	4.3	1.9	1.7	1.6					—	2800					2800		

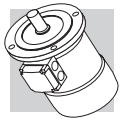

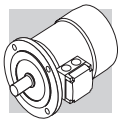

M11 DIMENSIONI MOTORI

BN - IM B5

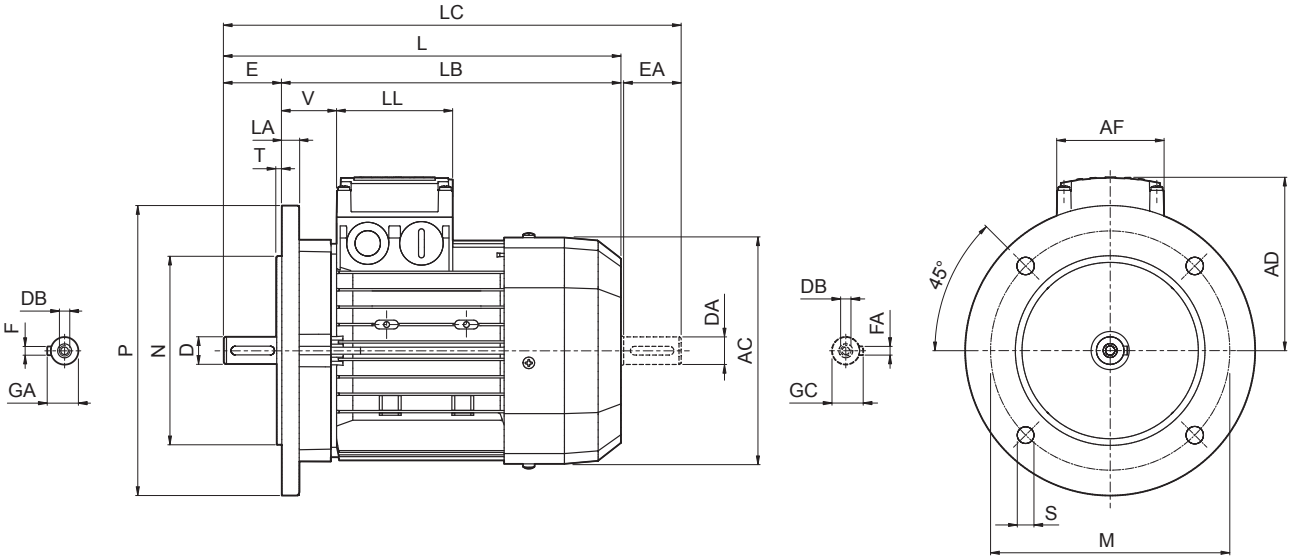

	Albero					Flangia						Motore							
	D DA	**E EA**	**DB**	**GA GC**	**F FA**	**M**	**N**	**P**	**S**	**T**	**LA**	**AC**	**L**	**LB**	**LC**	**AD**	**AF**	**LL**	**V**
BN 56	9	20	M3	10.2	3	100	80	120	7	3	8	110	185	165	207	91	74	80	34
BN 63	11	23	M4	12.5	4	115	95	140	9.5		10	121	207	184	232	95			26
BN 71	14	30	M5	16	5	130	110	160		3.5		138	249	219	281	108			37
BN 80	19	40	M6	21.5	6	165	130	200	11.5		11.5	156	274	234	315	119			38
BN 90	24	50	M8	27	8							176	326	276	378	133	98	98	44
BN 100	28	60	M10	31		215	180	250	14	4	14	195	367	307	429	142			50
BN 112											15	219	385	325	448	157			52
BN 132	38	80	M12	41	10	265	230	300			20	258	493	413	576	193	118	118	58
BN 160 MR	42 38 (1)	110 80 (1)	M16 M12 (1)	45 41 (1)	12 10 (1)	300	250	350	18.5	5	15		562	452	645				218
BN 160 M												310	596	486	680	245	187	187	51
BN 160 L																			
BN 180 M	48 38 (1)	110 110 (1)	M16 M12 (1)	51.5 41 (1)	14 10 (1)							310	640	530	724				
BN 180 L	48 42 (1)		M16 M16 (1)	51.5 45 (1)	14 12 (1)						18	348	708	598	823	261			52
BN 200 L	55 42 (1)		M20 M16 (1)	59 45 (1)	16 12 (1)	350	300	400					722	612	837				66

N.B.:
1) Queste dimensioni sono riferite alla seconda estremità d'albero.

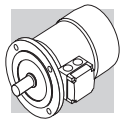

BN_FD ; IM B5

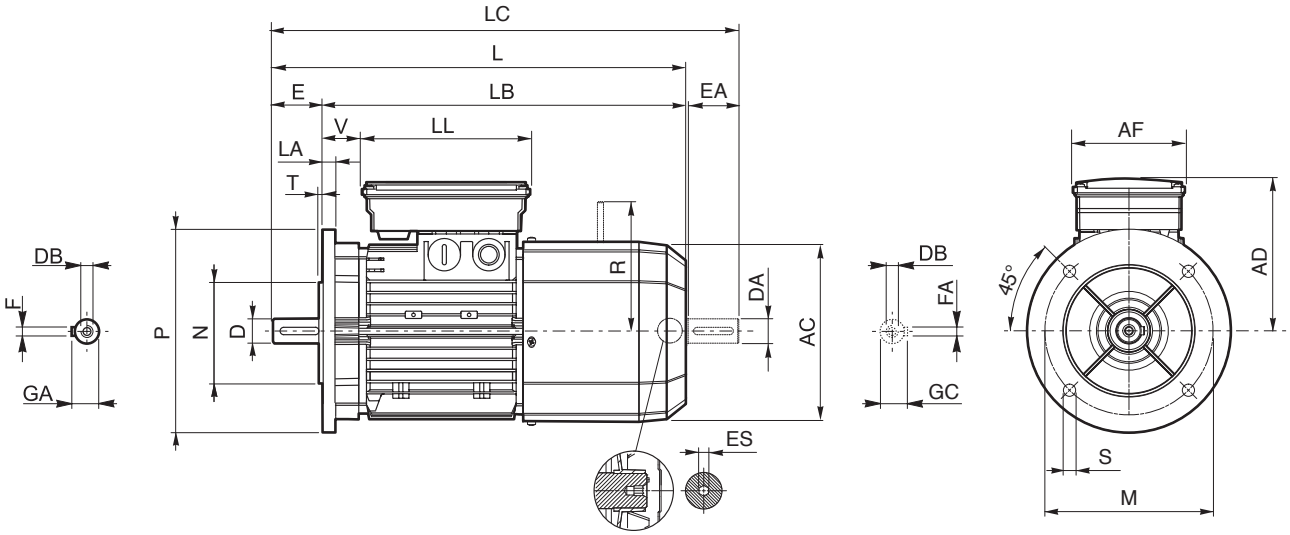

	Albero					Flangia						Motore									
	D DA	E EA	DB	GA GC	F FA	M	N	P	S	T	LA	AC	L	LB	LC	AD	AF	LL	V	R	ES
BN 63	11	23	M4	12.5	4	115	95	140	9.5	3	10	121	272	249	297	122	98	133	14	96	5
BN 71	14	30	M5	16	5	130	110	160	9.5	3.5		138	310	280	342	135			25	103	
BN 80	19	40	M6	21.5	6	165	130	200	11.5		11.5	156	346	306	388	146			41	129	
BN 90 S	24	50	M8	27	8							176	409	359	461	149	110	165	39		6
BN 90 L																146				160	
BN 100	28	60	M10	31		215	180	250	14	4	14	195	458	398	521	158		165	62		
BN 112											15	219	484	424	547	173		165	73	199	
BN 132	38	80	M12	41	10	265	230	300			20	258	603	523	686	210	140	188	46	204 (2)	
BN 160 MR	42 38 (1)	110 80 (1)	M16 M12 (1)	45 41 (1)	12 10 (1)	300	250	350	18.5	5	15		672	562	755				161	226	
BN 160 M												310	736	626	820	245	187	187	51	266	—
BN 160 L	42 38 (1)	110 80 (1)	M16 M12 (1)	45 41 (1)	12 10 (1)																
BN 180 M	48 38 (1)			51.5 41 (1)	14 10 (1)								780	670	864						
BN 180 L	48 42 (1)	110 110 (1)	M16 M16 (1)	51.5 45 (1)	14 12 (1)						18	348	866	756	981	261			52	305	
BN 200 L	55 42 (1)		M20 M16 (1)	59 45 (1)	16 12 (1)	350	300	400	18.5				878	768	993				64		

N.B.:
1) Queste dimensioni sono riferite alla seconda estremità d'albero.
2) Per freno FD07 quota R=226.

L'esagono ES non è presente con l'opzione PS.

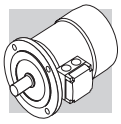

BN_FA - IM B5

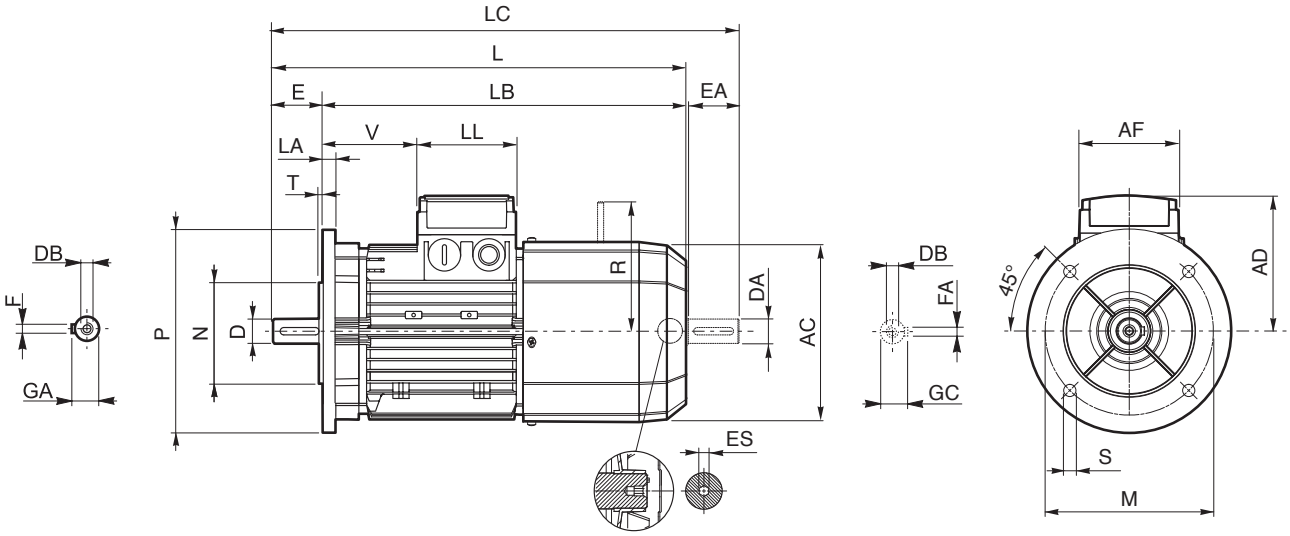

	Albero					Flangia						Motore									
	D DA	**E EA**	**DB**	**GA GC**	**F FA**	**M**	**N**	**P**	**S**	**T**	**LA**	**AC**	**L**	**LB**	**LC**	**AD**	**AF**	**LL**	**V**	**R**	**ES**
BN 63	11	23	M4	12.5	4	115	95	140	9.5	3	10	121	272	249	297	95	74	80	26	116	5
BN 71	14	30	M5	16	5	130	110	160		3.5		138	310	280	342	108			68	124	
BN 80	19	40	M6	21.5	6	165	130	200	11.5		11.5	156	346	306	388	119			83	134	
BN 90	24	50	M8	27	8							176	409	359	461	133	98	98	95	160	6
BN 100	28	60	M10	31		215	180	250	14	4	14	195	458	398	521	142			119		
BN 112											15	219	484	424	547	157			128	198	
BN 132	38	80	M12	41	10	265	230	300			20	258	603	523	686	210	140	188	46	200 (2)	
BN 160 MR	42 38 (1)	110 80 (1)	M16 M12 (1)	45 41 (1)	12 10 (1)	300	250	350	18.5	5	15		672	562	755	193	118	118	218	217	
BN 160 M												310	736	626	820	245	187	187	51	247	—
BN 160 L																					
BN 180 M				51.5 41 (1)	14 10 (1)								780	670	864						

N.B.:
1) Queste dimensioni sono riferite alla seconda estremità d'albero.
2) Per freno FA07 quota R=217.

Le dimensioni AD, AF, LL e V relative alla scatola morsettiera dei motori BN...FA dotati di alimentazione separata del freno (opzione SA) coincidono con quelle dei motori BN...FD di pari taglia.

L'esagono ES non è presente con l'opzione PS.

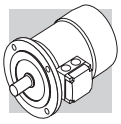

M

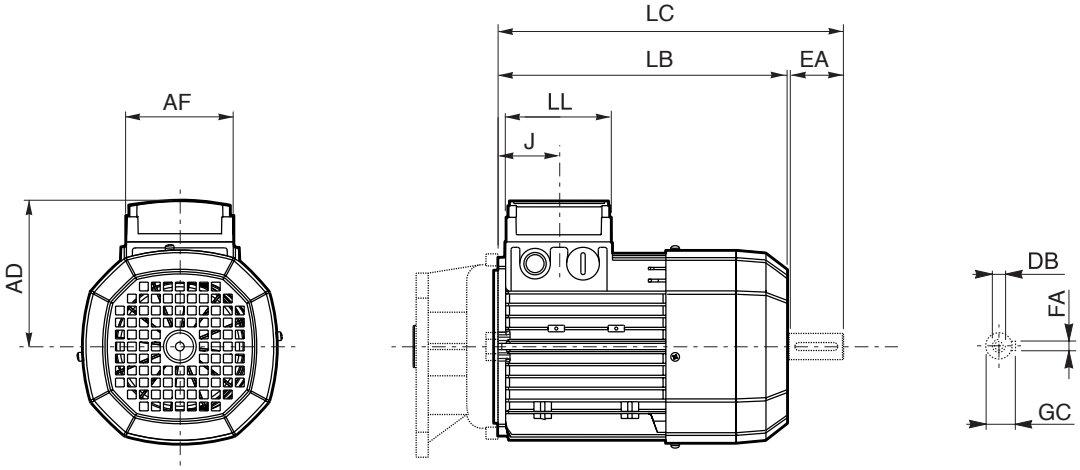

	Seconda estremità albero					Motore						
	DA	**EA**	**DB**	**FA**	**GC**	**AC**	**LB**	**LC**	**AF**	**LL**	**J**	**AD**
M 0	9	20	M3	3	10.2	110	133	155	74	80	42	91
M 05	11	23	M4	4	12.5	121	165	191			48	95
M 1	14	30	M5	5	16	138	187	219			45	108
M 2 S	19	40	M6	6	21.5	156	202	245			44	119
M 3 S	28	60	M10	8	31	195	230	293	98	98	53.5	142
M 3 L							262	325				
M 4	38	80	M12	10	41	258	361	444	118	118	64.5	193
M 4 LC							396	479				
M 5 S						310	418	502	187	187	77	245
M 5 L							462	546				

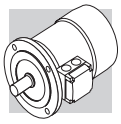

M_FD

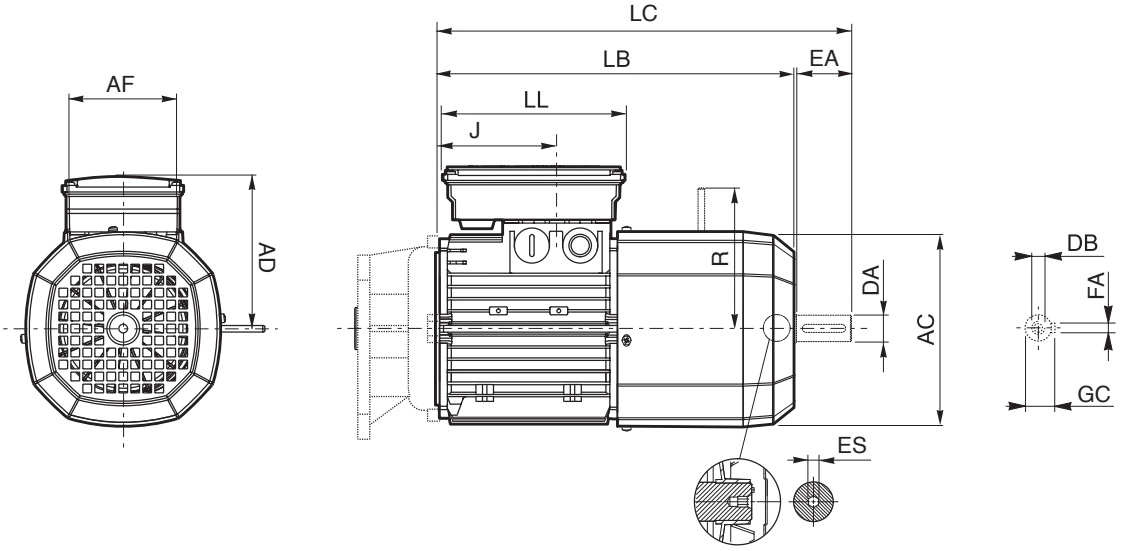

	Seconda estremità albero					Motore								
	DA	**EA**	**DB**	**FA**	**GC**	**AC**	**LB**	**LC**	**AF**	**LL**	**J**	**AD**	**R**	**ES**
M 05	11	23	M4	4	12.5	121	231	256	98	133	48	122	96	5
M 1	14	30	M5	5	16	138	248	280			73	135	103	
M 2 S	19	40	M6	6	21.5	156	272	314			88	146	129	
M 3 S	28	60	M10	8	31	195	326	389	110	165	124.5	158	160	6
M 3 L							353	416						
M 4	38	80	M12	10	41	258	470	553	140	188	185.5	210	204 (1)	
M 4 LC							495	578			64.5		226	
M 5 S						310	558	642	187	187	77	245	266	—
M 5 L							602	686						

N.B.:
1) Per freno FD07 quota R=226.

L’esagono ES non è presente con l’opzione PS.

M_FA

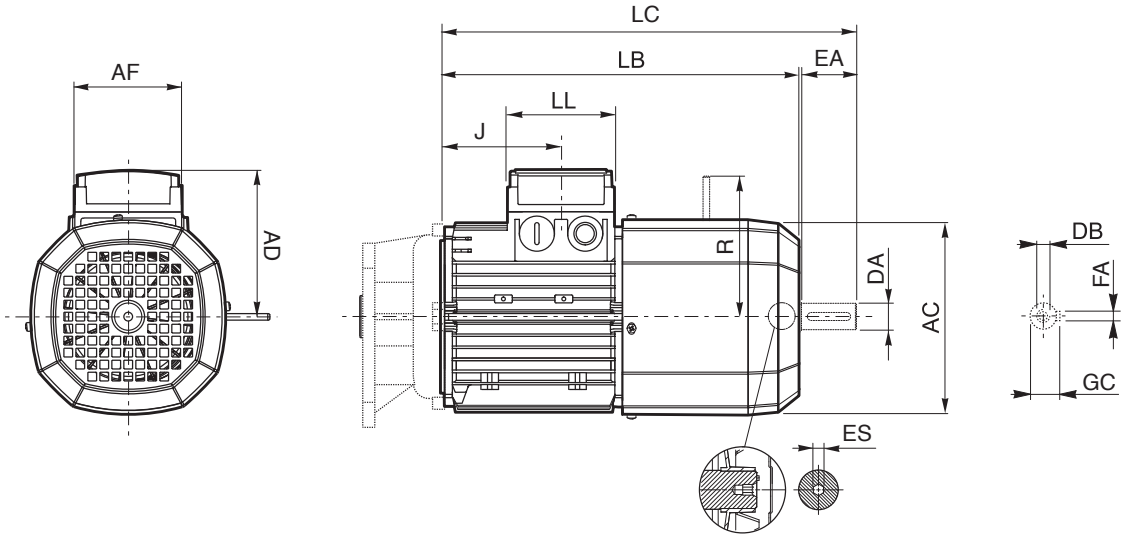

	Seconda estremità albero					Motore								
	DA	**EA**	**DB**	**FA**	**GC**	**AC**	**LB**	**LC**	**AF**	**LL**	**J**	**AD**	**R**	**ES**
M 05	11	23	M4	4	12.5	121	231	256	74	80	48	95	116	5
M 1	14	30	M5	5	16	138	248	280			73	108	124	
M 2 S	19	40	M6	6	21.5	156	272	314			88	119	134	
M 3 S	28	60	M10	8	31	195	326	389	98	98	124.5	142	160	6
M 3 L							353	416						
M 4	38	80	M14	10	41	258	470	553	140	188	185.5	210	200 (1)	
M 4 LC							495	578			64.5		217	
M 5 S			M12			310	558	642	187	187	77	245	247	—
M 5 L							602	686						

N.B.:
1) Per freno FA07 quota R=217.

Le dimensioni AD, AF, LL e V relative alla scatola morsettiera dei motori M...FA dotati di alimentazione separata del freno (opzione SA) coincidono con quelle dei motori M...FD di pari taglia

L’esagono ES non è presente con l’opzione PS.

INDICE DI REVISIONE

BR_CAT_300M_STD_ITA_R00_2	
	Descrizione
458	Aggiornato dimensioni albero cliente FZP.

30 04 2018

Bonfiglioli
Forever Forward

Abbiamo un inflessibile dedizione per l'eccellenza, l'innovazione e la sostenibilità.
Il nostro Team crea, distribuisce e supporta soluzioni di Trasmissioni e Controllo di Potenza per mantenere il mondo in movimento.

HEADQUARTERS
Bonfiglioli Riduttori S.p.A.
Via Giovanni XXIII, 7/A
40012 Lippo di Calderara di Reno
Bologna (Italy)
tel: +39 051 647 3111
fax: +39 051 647 3126
bonfiglioli@bonfiglioli.com
www.bonfiglioli.com