Bonfiglioli
Forever Forward

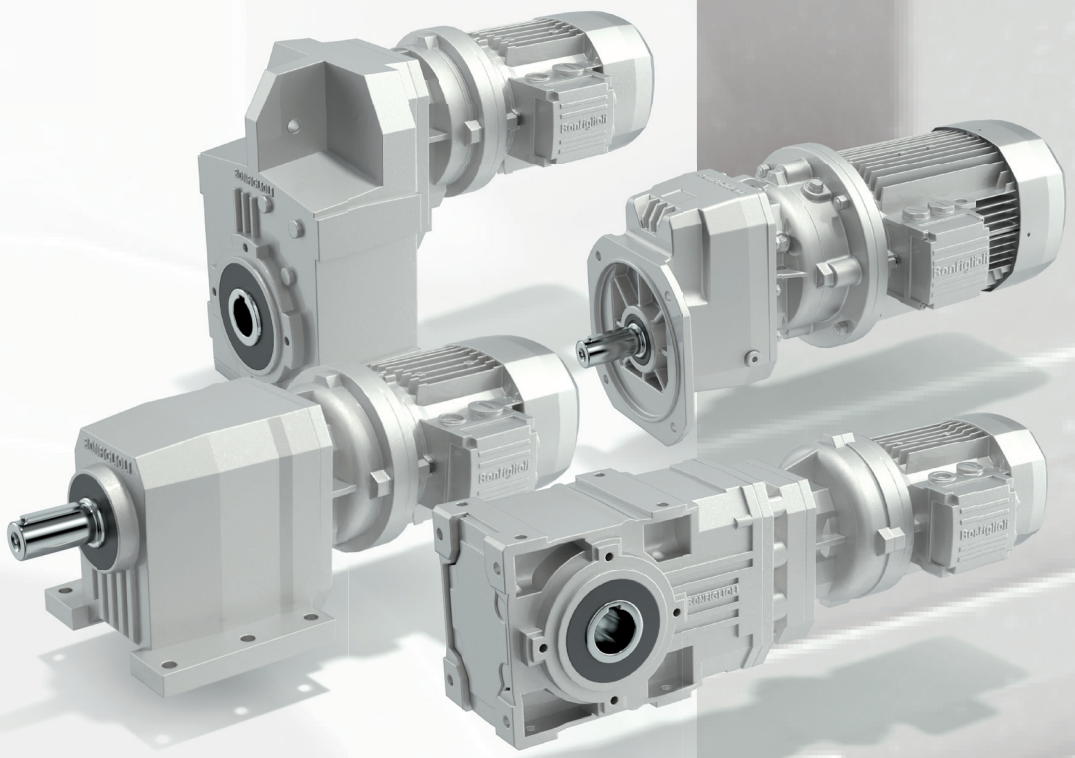

C-A-F-S 系列

IE2-IE3

斜齿轮减速机 C
斜齿轮锥齿轮减速机 A
平行轴减速机 F
单级减速机 S

產品與
解決方案

章节	说明	页码
概述		**2**
1	符号和计量单位	2
2	允许温度限值	4
3	扭矩	5
4	功率	5
5	热功率	6
6	效率	7
7	速比	8
8	转速	8
9	转动惯量	8
10	使用系数	10
11	维护	11
12	选型	12
13	校核	15
14	安装	16
15	安装说明	17
16	存储	18
17	供货条件	18
18	油漆规范	18
斜齿轮减速机 C系列		**20**
19	设计特点	20
20	输出结构形式	21
21	命名	22
22	安装位置和接线盒位置	26
23	悬臂载荷	29
24	轴向载荷	32
25	减速电机选型表	33
26	减速电机选型表	74
27	电机与减速机的组合范围	96
28	转动惯量	99
29	精确速比	118
30	尺寸	121
斜齿轮锥齿轮减速机 A系列		**162**
31	设计特点	162
32	输出结构形式	163
33	命名	164
34	安装位置和接线盒位置	170
35	悬臂载荷	172
36	轴向载荷	175
37	轴的旋转方向	175
38	减速电机选型表	176
39	减速电机选型表	212
40	电机与减速机的组合范围	234
41	转动惯量	238
42	精确速比	259
43	尺寸	261
44	附件	305
45	与减速机配合的客户轴	307
满足ATEX要求的 A系列斜齿轮-伞齿轮减速机		**310**
46	ATEX规则介绍	310
47	选型	313
48	安装、使用和维护	314
49	减速机满足ATEX要求的说明	314
50	输出结构	315
51	型号说明	316
52	减速机和减速电机的其他信息	317

章节	说明	页码
平行轴减速机 F系列		**318**
53	设计特点	318
54	输出结构形式	319
55	命名	320
56	安装位置和接线盒位置	325
57	悬臂载荷	327
58	轴向载荷	330
59	减速电机选型表	331
60	减速电机选型表	364
61	电机与减速机的组合范围	384
62	转动惯量	388
63	精确速比	405
64	尺寸	406
65	附件	443
66	与减速机配合的客户轴	444
单级减速机 S系列		**446**
67	设计特点	446
68	输出结构形式	447
69	命名	448
70	安装位置和接线盒位置	452
71	悬臂载荷	456
72	轴向载荷	458
73	减速电机选型表	459
74	减速电机选型表	473
75	电机与减速机的组合范围	478
76	转动惯量	479
77	尺寸	482
电机		**492**
M1	符号和计量单位	492
M2	说明	493
M3	一般特性	495
M4	基本选项	497
M5	可选选项	500
M6	机械特性	502
M7	电气特性	506
M8	异步制动电机	517
M9	BX_FD - BN_FD 和 MX_FD - M_FD型直流制动电机	518
M10	BX_FA - BN_FA 和 MX_FA - M_FA系列交流制动电机	523
M11	制动释放系统	526
M12	选项	528
M13	电机相关表	541
M14	BX-MX电机额定值表	546
M15	BX-MX电机尺寸	553
M16	BE-ME电机额定值表	561
M17	BE-ME电机尺寸	565
M18	BN-M电机额定值表	567
M19	BN-M电机尺寸	584

版本

参照第590页查看样本更新的内容。请访问www.bonfiglioli.com获取最新的样本。

概述

1 符号和计量单位

符号	计量单位	说明
$A_{N\ 1,\ 2}$	[N]	允许的轴向力
f_s	–	服务系数
f_T	–	热功率系数
f_{TP}	–	温度系数
i	–	减速机速比
l	–	负载持续率
J_C	[Kgm²]	负载的转动惯量
J_M	[Kgm²]	电机的转动惯量
J_R	[Kgm²]	减速机的转动惯量
K	–	惯性加速度系数
K_r	–	传输方式系数
$M_{\ 1,\ 2}$	[Nm]	转矩
$M_{c\ 1,\ 2}$	[Nm]	计算转矩
$M_{n\ 1,\ 2}$	[Nm]	额定转矩
$M_{r\ 1,\ 2}$	[Nm]	需用转矩
$n_{\ 1,\ 2}$	[min^{-1}]	转速

符号	计量单位	说明
$P_{\ 1,\ 2}$	[kW]	功率
$P_{N\ 1,\ 2}$	[kW]	额定功率
$P_{R\ 1,\ 2}$	[kW]	需用功率
$R_{C\ 1,\ 2}$	[N]	计算用径向力
$R_{N\ 1,\ 2}$	[N]	许用悬臂载荷
S	–	安全系数
t_a	[°C]	环境温度
t_s	[°C]	表面温度
t_f	[min]	恒定载荷下的工作时间
t_r	[min]	停转时间
η_d	–	动态效率
η_s	–	静态效率
φ	[′]	输出轴齿隙（输入轴固定）

下标1代表输入轴

下标2代表输出轴

表示详细内容可以在这一页上查找。

表示悬臂载荷所施加的角度（从驱动轴端方向看）。

表示减速电机和减速机的重量。

对于减速电机，这个重量包括4极电机、终身润滑装置（如有）和润滑油的重量。

危险 – 警告
表示危险，如果忽视可能对操作人员造成严重伤害。

重要
表示重要的技术信息。

适用于符合欧洲防爆标准的设备。

Serie C	Serie A	Serie F	Serie S	
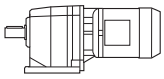	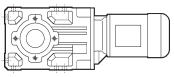	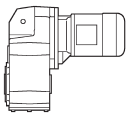	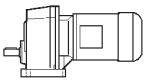	表示配一体化电机的齿轮减速电机
		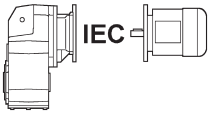		表示配IEC电机的齿轮减速电机
	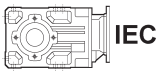	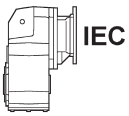		表示配IEC电机接口的减速机
		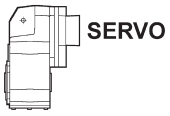		表示配伺服电机接口的减速机
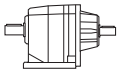	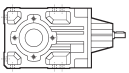	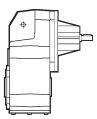	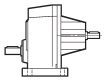	表示实心轴输入的减速机

2 允许温度限值

符号	描述/工况	数值 (*)	
		合成油	矿物油
t_a	环境温度		
$t_{au\ min}$	最低工作环境温度	**-30°C**	**-10°C**
$t_{au\ Max}$	最高工作环境温度	**+50°C**	**+40°C**
$t_{as\ min}$	最低存放环境温度	**-40°C**	**-10°C**
$t_{as\ Max}$	最高存放环境温度	**+50°C**	**+50°C**
t_s	表面温度		
$t_{s\ min}$	采用部分载荷启动时的最低减速机表面温度(#)	**-25°C**	**-10°C**
$t_{sc\ min}$	采用全载荷启动时的最低减速机表面温度	**-10°C**	**-5°C**
$t_{s\ Max}$	连续运行时最高箱体表面温度（靠近减速机输入的位置测得）	**+100°C**	**+100°C** (@)
t_o	油温		
$t_{o\ Max}$	连续运行时最高油温	**+95°C**	**+95°C** (@)

(*) = 请见“最佳滑油粘度选用”表格获取关于不同滑油粘度最大值和最小值方面的其他信息。
如果数值ta <−20℃且ts、to> 80℃，选用材料最适合相关应用类型的（按照产品配置阶段允许的情况）密封类型。如果需要的话，请联系邦飞利技术服务部门”

(@) = 连续运行 如果ts和to的范围为80℃至95℃，则不建议

= 针对全载荷启动，建议试产扩量，同时增大马达的吸力。如果需要的话，请联系邦飞利技术服务部门。

3 扭矩

3.1 额定扭矩 M_{n2} [Nm]

指使用系数f_S=1时，减速机的输出轴能持续传递的扭矩。
额定扭矩与转速有关。

3.2 所需扭矩 M_{r2} [Nm]

所需扭矩取决于实际应用工况。
所需扭矩必须等于或小于拟选减速机的额定扭矩M_{n2}

3.3 计算用扭矩 M_{c2} [Nm]

计算用扭矩会在减速机选型时用到。
计算用扭矩可以由实际所需扭矩M_{r2}和使用系数f_S，按以下公式计算：

$$M_{c2} = M_{r2} \cdot f_s < M_{n2} \quad (1)$$

4 功率

4.1 额定功率 P_{n1} [kW]

在减速机选型表中，这个功率是指输入转速为n_1及使用系数f_S=1时，减速机输入轴的功率。

5 热功率 P_t [kW]

Pt是指环境温度为20° C，不导致内部零件损坏或润滑性能降低的条件下，减速机连续运行能够传递的功率，详细的数据参见表(A1)。
在间歇工作制，或工作环境温度不同于20° C情况下，Pt值应由表(A2)中的系数 ft和公式Pt’ = Pt x ft进行调整。

2级以上传动或传动比大于45的减速机通常不要求检查热功率限制，因为在这种情况下，热功率额定值通常超出了机械功率额定值。

(A 1)

P_t [kW] 20 °C		
	n_1 = 1400 min^{-1}	n_1 = 2800 min^{-1}
C 05 2	—	—
C 12 2	—	—
C 22 2	—	—
C 32 2	—	4.5
C 36 2	6.5	5.0
C 41 2	8.0	6.0
C 51 2	11.0	7.8
C 61 2	14.0	10.0
C 70 2	21	16.0
C 80 2	32	24
C 90 2	43	32
C 100 2	59	42

P_t [kW] 20 °C		
	n_1 = 1400 min^{-1}	n_1 = 2800 min^{-1}
A 05 2	2.0	1.5
A 10 2	2.1	1.5
A 20 2	6.0	5.4
A 30 2	8.0	6.6
A 35 2	9.5	8.2
A 41 2	11.5	9.6
A 50 2	20	18.0
A 55 2	21	18.0
A 60 2	27	23
A 70 3	31	24
A 80 3	44	33
A 90 3	64	48

P_t [kW] 20 °C		
	n_1 = 1400 min^{-1}	n_1 = 2800 min^{-1}
F 10 2	3.8	2.7
F 20 2	9.1	6.5
F 25 2	10.2	7.4
F 31 2	11.7	8.5
F 41 2	14.3	10.4
F 51 2	21.5	15.0
F 60 3	26.0	18.9
F 70 3	36.4	26.0
F 80 3	52	36
F 90 3	75	53

P_t [kW] 20 °C		
	n_1 = 1400 min^{-1}	n_1 = 2800 min^{-1}
S 10 1	5.5	4.9
S 20 1	7.8	7.2
S 30 1	10.0	9.1
S 40 1	15.6	14.3
S 50 1	21	18.9

(A 2)

f_t					
t_a [°C]	连续工作制	间隙工作制			
		负载持续率 [I]			
		80%	**60%**	**40%**	**20%**
40	0.80	1.1	1.3	1.5	1.6
30	0.85	1.3	1.5	1.6	1.8
20	1.0	1.5	1.6	1.8	2.0
10	1.15	1.6	1.8	2.0	2.3

这里负载持续率(I)%是指有负载时工作时间t_f与总时间 ($t_f + t_r$)的比值，以百分比表示如下：

$$I = \frac{t_f}{t_f + t_r} \cdot 100 \qquad (2)$$

验证条件为：

$$P_{r1} \leq P_t \times f_t \qquad (3)$$

6 效率

6.1 动态效率 η_d

动态效率指输出功率P_2与输入功率P_1比值，由以下公式计算得出：

$$\eta_d = \frac{P_2}{P_1} \cdot 100 \quad [\%] \qquad (4)$$

(A 3)

	2 x	**3 x**	**4 x**
η_d	95%	93%	90%

	2 x	**3 x**	**4 x**
η_d	94%	91%	89%

	2 x	**3 x**	**4 x**
η_d	95%	93%	90%

	1 x
η_d	98%

7 速比

速比用字母[i]表示，等于输入转速n_1与输出转速n_2的比值：

$$i = \frac{n_1}{n_2} \quad (5)$$

速比通常为小数，样本保留至小数点后一位(对于i>1000，不保留小数)。
如果想了解精确的数值，如果需要知道速比的精确值请查阅“精确速比”章节。

8 转速

8.1 输入转速n_1 [min^{-1}]

转速与所选原动机有关。样本中的数值指工业中常用的单速或双速电机的转速。
如果减速机由外部传动装置驱动，为了优化工作条件和提高使用寿命，建议使用1400min^{-1}或更低的转速。
允许较高的输入转速，但是在这种情况下，额定输出扭矩M_{n2}的值会下降。
详细情况请咨询邦飞利技术部。

8.2 输出转速n_2 [min^{-1}]

输出转速n_2是按照下列公式通过输入转速n_1和传动比i计算出来的：

$$n_2 = \frac{n_1}{i} \quad (6)$$

9 转动惯量Jr [Kgm^2]

样本中的转动惯量指输入轴的转动惯量。因此在减速机与电机直接联接的情况下，转动惯量与电机转速有关。

10 使用系数f_S

使用系数用来表征减速机的负载特性，它与减速机实际应用时每日运行条件、负载变化和过载因素有关。
在下面图表(A4)中，选择相应的“每日运行时间”列后，即可由每小时起动次数与曲线K1, K2 和K3相交点获得使用系数。
K_曲线是通过惯性加速度系数K与负载特性（分为：均匀负载，中等负载和重负载）相联系的，且与被驱动装置的转动惯量和电机的转动惯量比值有关。
尽管给出了使用系数的数值，但我们仍然要提醒在某些应用中（如提升），要注意保护操作人员避免因减速机的故障而导致伤害。如有疑问请咨询邦飞利技术服务部。

(A 4)

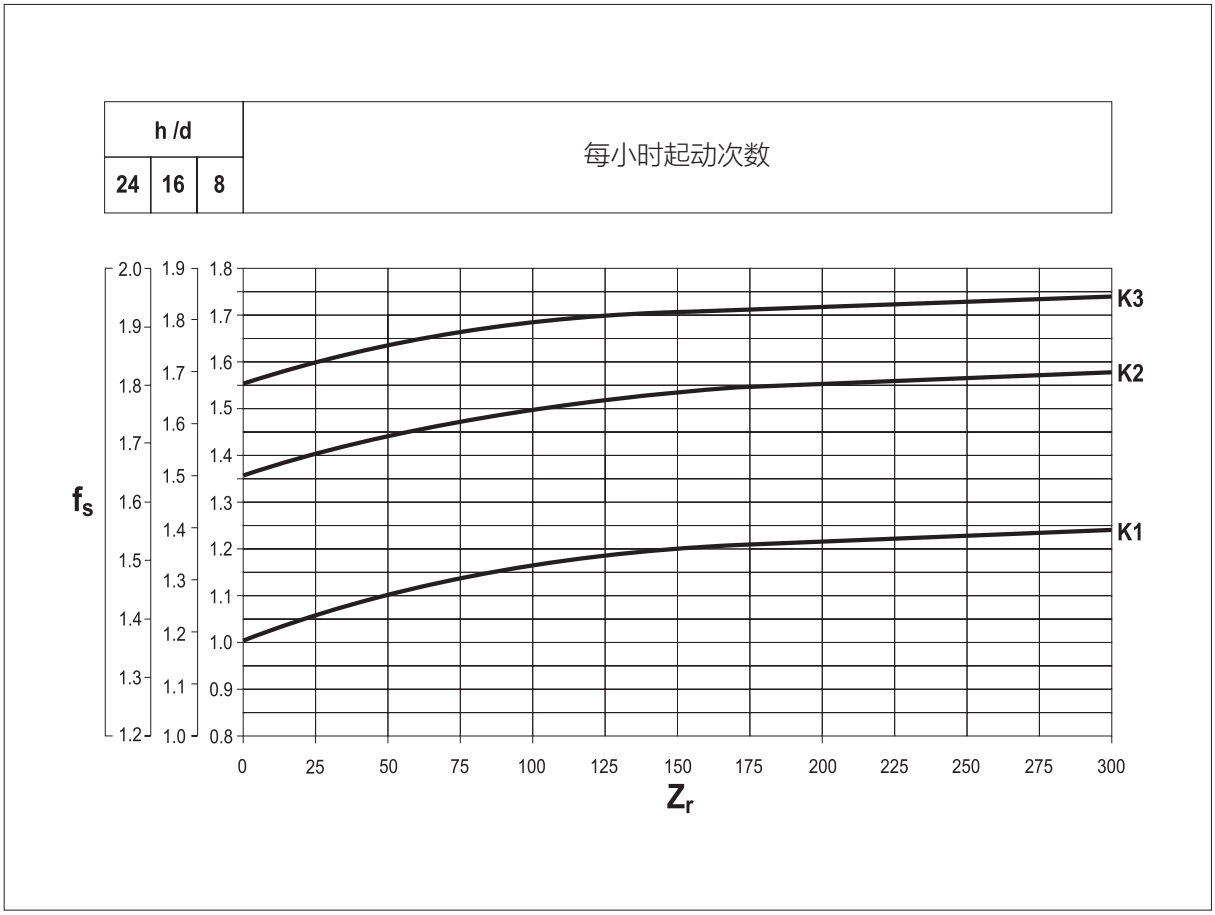

10.1 惯性加速度系数K

这个参数用于选择正确的负载类型曲线，其数值由下列比值给出：

(A 5)

$$K = \frac{J_c}{J_m} \rightarrow \begin{cases} J_c = \text{电机驱动轴所驱动的转动惯量} \\ J_m = \text{电机的转动惯量} \end{cases}$$

K ≤ 0,25	→ **K1**	均匀负载
0,25 < K ≤ 3	→ **K2**	中等冲击载荷
3 < K ≤ 10	→ **K3**	重冲击载荷
K > 10	→	请咨询邦飞利技术部门

11 润滑

终身润滑的减速机不需要进行任何定期换油。
请参阅www.bonfiglioli.com中提供的《用户手册》，了解关于与检查油位以及改用其他类型减速机的指示说明。
请勿将矿物油与合成油和/或不同品牌的油品混用。
但是应当定期检查油位并且根据要求加油。
每月检查装置是否在间歇占空情况下运行，如果连续占空，则应当更加频繁地进行检查。

11.1 最佳滑油粘度选用（与壳牌润滑油相关的数据）

(A 6)

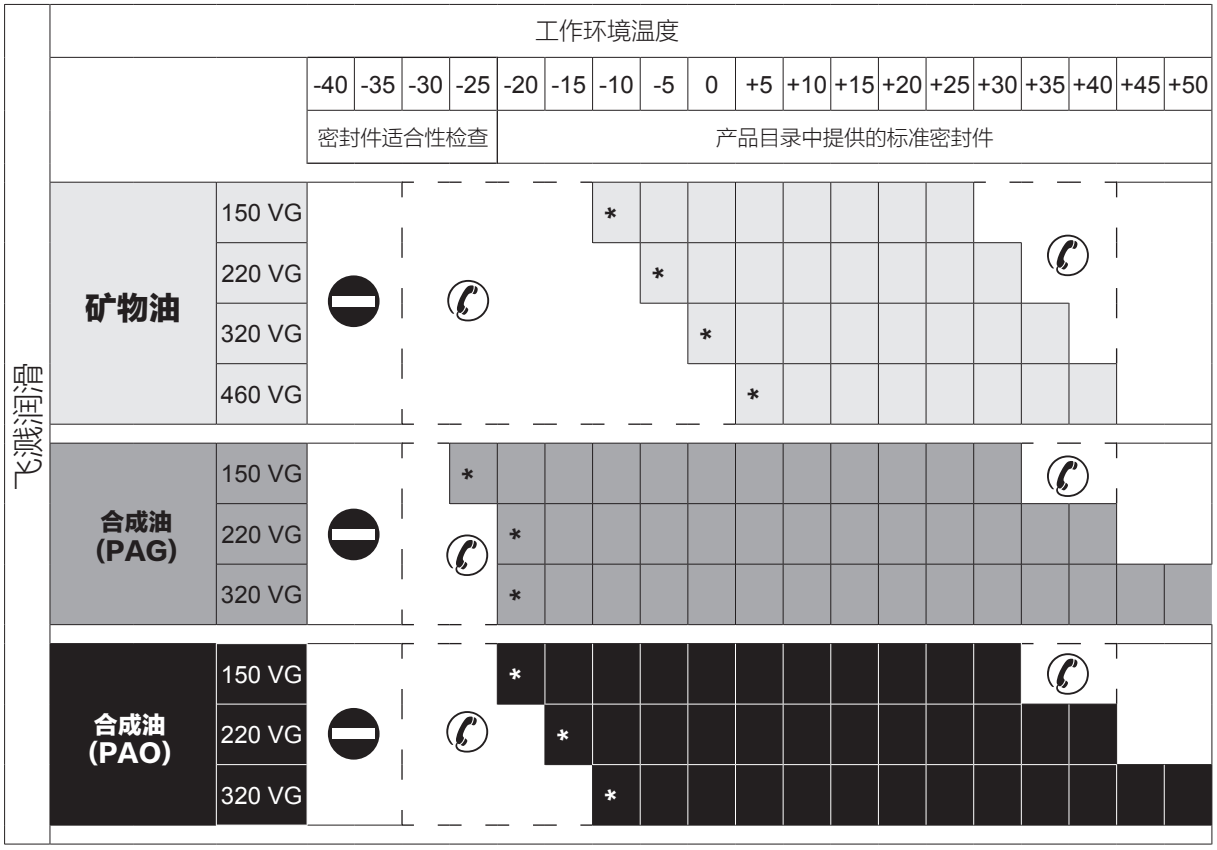

推荐工作限值

允许工作限值 ✆

禁止工作限值

* = 建议试产扩量并且增大马达的轴功率。如果需要而且在采用脉冲载荷工况时请联系邦飞利技术服务部门。✆

11.2 适用于C、A、F、S系列减速机的润滑作业

邦飞利减速机内部零件采用油浴和飞溅润滑。
C 05...C 41, A 05...A 41, F 10...F 41, S 10...S 40减速机出厂前已由厂家或授权的经销商加油。
除非特别指定，C 51, A 50, F 51, S 50及以上机座出厂前不加油，减速机运行之前，用户自己加油。
以上2种情况，在减速机投入运行之前，用户都要将用于运输的油堵换成透气塞。
油堵位置和润滑油用量的表格参见安装,操作,维保手册（可以在邦飞利网站www.bonfiglioli.com下载）。
工厂提供的poliglycol基终身润滑油，在没有污染的情况下，减速机在整个使用寿命期间不需定期换油。

11.3 适用于A-EX (Atex)减速机的润滑作业

邦飞利减速机内部零件采用油浴和飞溅润滑方式。
ATEX要求的减速机 (下表的安装方式除外) 由工厂按订单上安装位置所需油量加终身免维护的 SHELL OMALA S4 WE 320 润滑油。

(A 7)

A 05	A 10	A 20	A 30	A 35	A 41	A 50	A 55 [1)]	A 60 2 [2)]	A 60 3 [1)]	A 60 4 [1)]	A 70 [1)]	A 80 [1)]	A 90 [1)]

减速机预加终生免维护的合成油　　减速机已加注合成油

(1) 安装位置是 B6 和 B7 时， 出厂不加油
(2) 安装位置是 B6, B7 和 VB 时，出厂不加油

减速机运输时在透气塞位置装有油堵。客户在开机前必须根据安装、使用和维护手册上要求将油堵换成随机的透气塞。(这些操作手册有多种文字版本，客户可以自行从 www.bonfiglioli.com下载)

当减速机出厂没加油时，客户可在安装、使用和维护手册上推荐的品牌中选择类似润滑油。

12 选型

减速电机和减速机的选型需要一些基本的数据，下表(A7)简要总结了这些参数。
为了简化选择, 请填写表格并将副本发送给我们的技术服务部门,技术服务部门将为您的应用选择最合适的方案。

(A 8)

	应用类型	
P_{r2}	最大输出转速下的输出功率	.....kW
P_{r2}'	最小输出转速下的输出功率	.....kW
M_{r2}	最大输出转速下的输出转矩	.....Nm
n_2	最大输出转速	.....min^{-1}
n_2'	最小输出转速	.....min^{-1}
n_1	最大输入转速	.....min^{-1}
n_1'	最小输入转速	.....min^{-1}
R_{c2}	输出轴径向载荷	.....N
x_2	输出轴所施加载荷的作用点位置 (*)	.....mm
	输出轴载荷方向	..... 
	输出轴旋转方向（顺时针/逆时针）(**)	.....
R_{c1}	输入轴径向载荷	.....N
x_1	输入轴所施加载荷的作用点位置 (*)	.....mm
	输入轴载荷方向	..... 
	输入轴旋转方向（顺时针/逆时针）(**)	.....
A_{c2}	输出轴轴向载荷方向 (+/－)(***)	.....N

A_{c1}	输入轴轴向载荷方向 (+/－)(***)	.....N
J_c	负载的转动惯量	.....Kgm^2
t_a	环境温度	.....C°
	海拔高度	.....m
	IEC规范的工作制	S...../.....%
Z	起动次数	.....1/h
	电机电压	V
	制动电压	V
	频率	.....Hz
M_b	制动力矩	.....Nm
	电机防护等级	IP.....
	绝缘等级	.....

(*) x_{1-2} 是载荷作用点与轴肩的距离（如果载荷不是作用在轴伸部分的中点，就要考虑这一参数做出调整）。

(**) CW = 代表顺时针
CCW = 代表逆时针

(***) + = 代表压力
－ = 代表拉力

应用于ATEX要求下A系列减速机选型请参阅310页相关章节

12.1 减速电机选型

a) 按照负载类型(系数 K)、每小时起动次数Z_r和工作时间来决定使用系数f_s。

b) 根据扭矩M_{r2},转速n_2 和效率 η_d，利用以下公式可以计算出所需输入功率。

$$P_{r1} = \frac{M_{r2} \cdot n_2}{9550 \cdot \eta_d} \text{ [kW]} \quad (7)$$

效率 η_d可以从第6章查到。

c) 参考减速电机的选型表，并且选择标准的额定功率值P_n:

$$P_n \geq P_{r1} \quad (8)$$

除非另有说明，否则样本中的电机功率是指连续工作制S1下的电机功率。
对于非S1工作制的电机，所需负载类型必须参考CEI 2-3 /IEC 34-1标准。
特别是对于S2到S8工作制和机座号不大于132的电机，能够获得比S1工作制下更大的功率。
相应地必须满足下列条件:

$$P_n \geq \frac{P_{r1}}{f_m} \quad (9)$$

调整系数f_m可以从表(A9)中查到。

12.2 负载持续率

$$I = \frac{t_f}{t_f + t_r} \cdot 100 \quad (10)$$

t_f = 在恒定载荷下的工作时间
t_r = 停转时间

(A 9)

	工作制						
	S2			**S3***			**S4 - S8**
	循环周期 [min]			负载持续率 (I)			请联系我们
	10	**30**	**60**	**25%**	**40%**	**60%**	
f_m	1.35	1.15	1.05	1.25	1.15	1.1	

*任何情况下，循环周期必须小于等于10分钟。
如果循环周期较长，请联系我们的技术服务部。

其次，在减速电机选型表中查阅P_n部分，选择合适的减速电机，并且使输出转速等于或接近所需转速，安全系数不小于使用系数f_S。

安全系数定义如下：

$$S = \frac{M_{n2}}{M_2} = \frac{P_{n1}}{P_1} \quad (11)$$

减速机与2极、4极和6极50Hz电机组合是我们的标准组合，根据减速机的额定值选择电机输出转速2800, 1400 或 900 min^{-1}。

12.3 减速机和带IEC电机接口的减速机选型。

a) 确定使用系数f_S。

b) 假设应用所需的输出扭矩M_{r2}已知，那么计算用扭矩可以由以下公式得出：

$$M_{c2} = M_{r2} \cdot f_s \quad (12)$$

c) 速比可以根据所要求的输出转速n_2和输入转速n_1计算出来:

$$i = \frac{n_1}{n_2} \quad (13)$$

一旦知道了所需输出扭矩M_{c2}和速比i的值，根据相应的输入转速n_1可查找选型表，找出最接近的传动比，同时使对应的额定扭矩M_{n2}满足：

$$M_{n2} \geq M_{c2} \quad (14)$$

如果必须安装IEC标准电机，需要按照“可用电机”一章，检查电机与减速机结构的兼容性。

13 校核

完成减速机或减速电机的选型后，建议进行下列校核：

a) 热功率
确认减速机的热功率等于或大于公式(3)计算出的所需功率。
如果这个条件不能满足，应选择较大的减速机或增加强制冷却系统。

b) 最大扭矩
通常来说，作用于减速机的最大扭矩不能超过额定扭矩M_{n2}的2倍，因此，如有需要可以使用合适的扭矩限制器，确保不超出最大扭矩。
对于三相双速电机来说，要注意高速切换到低速时产生的切换扭矩，因为它可能明显大于最大扭矩。
为使过载最小化，一个简单而经济的方法是:在切换期间只给电机的两相供电(两相通电时间可以由时间继电器控制)：

$M_{g2} = 0.5 \cdot M_{g3}$
M_{g2} = 两相通电的切换扭矩
M_{g3} = 三相通电的切换扭矩

任何情况，建议联系我们的技术服务部。

c) 径向载荷
确保施加到输入或输出轴的径向力在样本的许可范围内。
如果径向力大于许用值，在准备选择更大的减速机前，请考虑设计不同的轴承布置。
样本中额定悬臂载荷指载荷作用于伸出轴部分的中点。
如果悬臂载荷的作用点位于中点以外，必须根据手册的说明调整负载能力。
请参阅有关径向载荷的章节。

d) 轴向载荷
实际的轴向载荷应该处于同等许用悬臂载荷的20%以内。
如果轴向载荷非常高，或径向载荷与轴向载荷同时存在，请咨询邦飞利技术服务部。

e) 每小时起动次数
对于高起停次数的工作制，必须计算允许的带负载起动次数。
每小时实际起动次数必须小于上述计算出的数据。

14 安装

请遵守以下安装说明：

a) 确保减速机安装牢固，避免振动。
如果可能存在冲击或过载，则应安装液力耦合器、离合器和扭矩限制器。

b) 在喷漆之前，一定要保护好加工面和油封外表面，避免油漆使橡胶变干，损坏密封性能。

c) 为了防止过盈配合损坏减速机，安装在减速机输出轴上的部件必须按照ISO H7规定的公差加工。而且，应使用轴端的螺孔定位拉拔装置安装或拆卸这些零件。

d) 安装之前，必须清洗并用适当的保护材料处理安装配合面，避免氧化导致粘合。

e) 减速机运行之前，确保连接的设备遵循最新的机器规范2006/42/EC。

f) 起动减速机之前，确保油位符合减速机的安装位置。

g) 对于户外安装，要提供充分的保护避免减速机雨淋和日光直射。

14.1 伺服电机通过锁紧装置（型号SC）安装到减速机上。

旋转锁紧装置直到槽口对准减速机输入轴铣削部分。如果电机轴带有键，拆掉键并且必须使键槽对准锁紧装置和减速机输入轴的槽口，然后把伺服电机装到位。键槽必须与锁紧螺钉同侧。拧紧伺服电机与减速机伺服接口的连接螺栓，扭矩扳手穿过法兰侧的孔，按照伺服接口图纸给定的扭矩，拧紧锁紧装置上的锁紧螺钉。

15 安装说明

表(A10)的附图表示A系列减速机在机座上的3种安装方式。
表(A11)列出了每种安装方式六角螺栓的规格。
此外，为了方便安装，我们建议使用表(A10)所示的扳手。

(A 10)

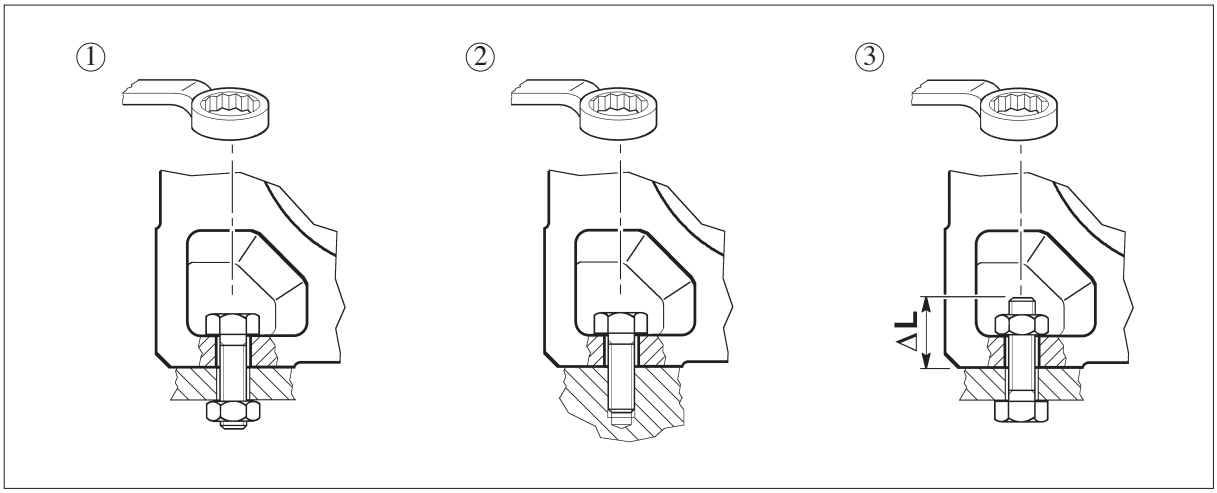

(A 11)

	螺栓的类型			
	①	②	③	ΔL (mm)
A 05	M8x22	M8x20	M8x ...	22
A 10	M8x25	M8x20	M8x …	20
A 20	M8x25	M8x20	M8x …	20
A 30	M10x30	M10x25	M10x …	25
A 35	M10x30	M10x25	M10x ...	25
A 41	M12x35	M12x30	M12x …	30

	螺栓的类型			
	①	②	③	ΔL (mm)
A 50	M14x45	M14x40	M14x …	35
A 55	M14x40	M14x40	M14x ...	35
A 60	M16x50	M16x45	M16x …	40
A 70	M20x60	M20x55	M20x …	45
A 80	M24x70	M24x65	M24x …	55
A 90	M24x90	M24x80	M24x …	65

16 存储

遵循下列各项说明，确保产品正确存储。

a) 不能放在室外、露天或过度潮湿的地方。

b) 始终在设备和地面之间垫有木板、木材或其他材料。
不得将减速机直接放在地面上。

c) 对于长期存放的减速机，所有加工面如法兰、轴和联轴器一定要涂上防锈产品 (Mobilarma 248或等效产品)。

此外，减速机放置时必须使注油塞处于顶部并加适量油。
在减速机投入运行前，必须重新注入合适数量和型号的润滑油。

17 供货条件

减速机按照如下标准供货：

a)根据订单要求的安装位置配置减速机；

b)根据制造商的技术规范测试减速机；

c)用于安装配合的机加工面不涂油漆；

d)提供电机安装的螺母和螺栓；

e)运输期间用塑料套保护轴；

f)提供起重吊环（如需要）。

18 油漆规范

可以从邦飞利分公司或经销商那里获得减速机的油漆规格（如需要）。



19 设计特点

主要设计特点如下：
- 模块化
- 结构紧凑
- 安装方式多样
- 效率高
- 低噪音
- 表面渗碳硬化处理齿轮
- 05,12,22,32机座采用铝制箱体，更大的机座采用高强度的铸铁箱体
- 输入和输出轴由优质钢制成

(B 12)

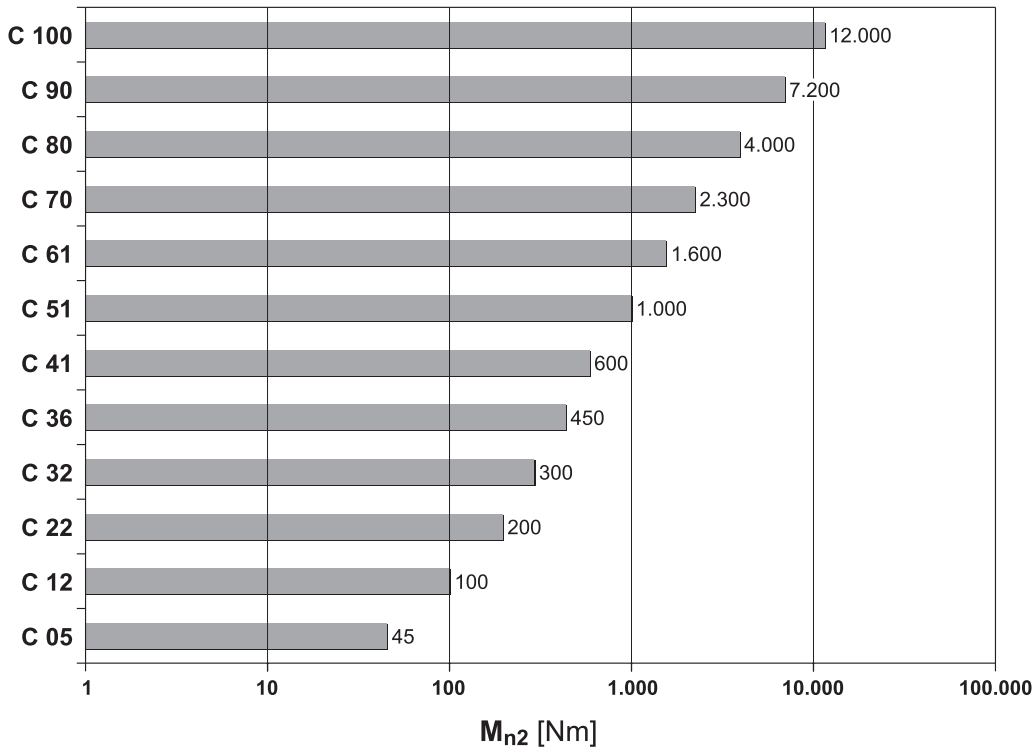

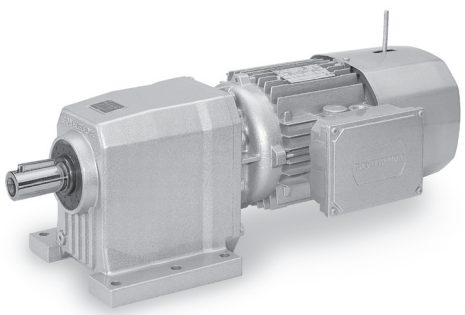

20 输出结构形式

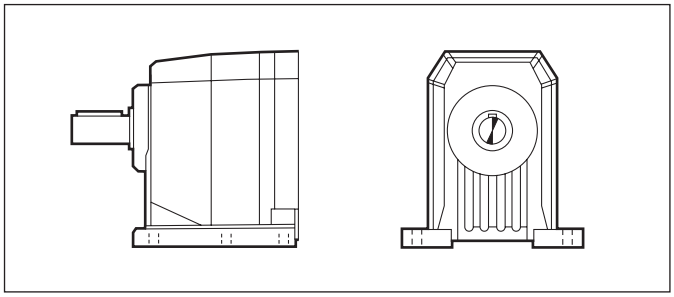

P

地脚安装

C 05 ... C 100

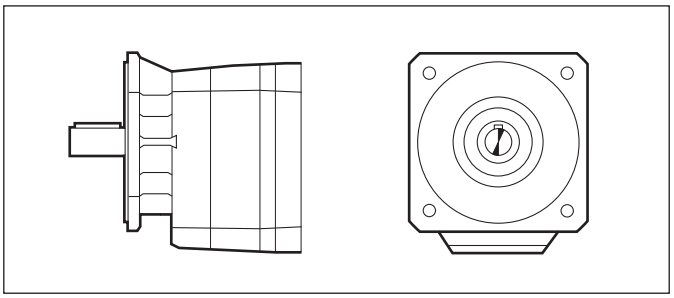

F

法兰安装

C 05 ... C 32
C 70 ... C 100

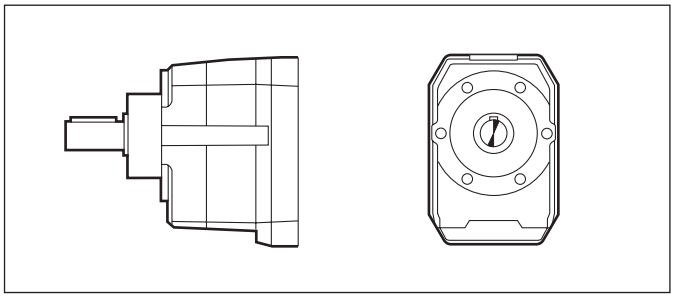

U

通用外壳

C 12 ... C 61

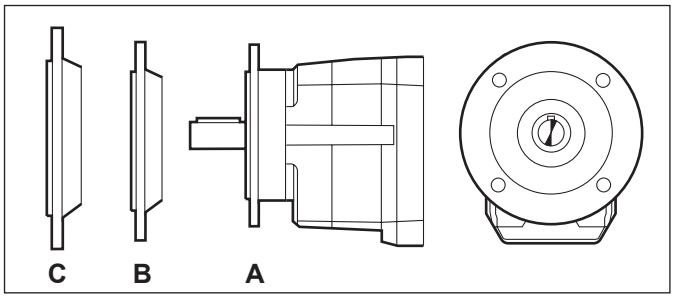

UF

螺栓连接法兰

C 12 ... C 61

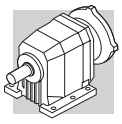

21 命名

齿轮箱

C 32 2 F 52.4 S1 B5 .....

选项

安装位置
C...P: **B3** (标准), B6, B7, B8, V5, V6
C...F/U/UF: **B5** (标准), B51, B53, B52, V1, V3

输入结构

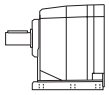
(C05...C100)

S05 ... S5

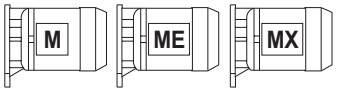

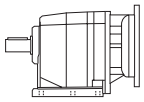
(C12...C100)

IEC_ **P63 ... P280**

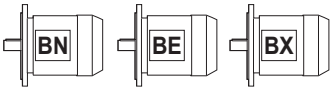

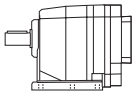
(C12...C61)

SK_
SC_

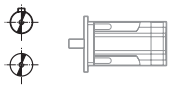

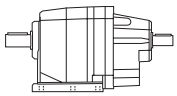
(C12...C100)

HS

速比

减速机结构形式

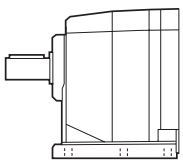
P
(C05...C100)

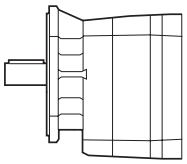
F
(C05...C32)
(C70...C100)

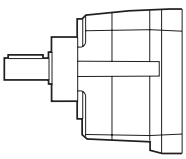
U
(C12...C61)

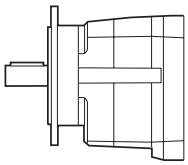
UFA
UFB
UFC
(C12...C61)

传动级数
2, 3, 4

减速箱机座号
05, 12, 22, 32, 36, 41, 51, 61, 70, 80, 90, 100

型号: **C =** 同轴式斜齿轮系列

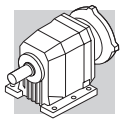

电机 制动器

M 1LA 4 230/400-50 IP54 CLF ..... **W FD** 7.5 R SB 220 SA .....

选项

制动电压

整流器型号
NB, SB, NBR, SBR

制动器手动释放手柄
R, RM

制动转矩

制动器类型
FD (直流制动器)
FA (交流制动器)

电机接线盒位置
W (默认), **N, E, S**

电机与减速机连接方式
— (紧凑型电机)
B5 (IEC电机)

绝缘等级
CL F 标准
CL H 可选

防护等级
IP55 标准 (**IP54** – 制动电机)

电压 – 频率

电机极数
2, 4, 6, 2/4, 2/6, 2/8, 2/12, 4/6, 4/8

电机机座号
0B – 5LA (紧凑型电机)
63A – 280M (IEC 电机)

电机型号
MX = 紧凑型高效三相电机(IE3) **ME** = 紧凑型高效三相电机(IE2) **M** = 紧凑型三相电机
BX = IEC 高效三相电机(IE3) **BE** = IEC 高效三相电机(IE2) **BN** = IEC 三相电机

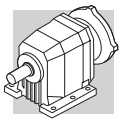

21.1 减速机选项

SO
对于机座C05，C12，C22，C32，C36和C41的减速机（通常出厂时已加油），这个选项表示供货时不加油。

LO
对于机座C51，C61，C70，C80，C90和C100减速机（通常出厂时不加油），这个选项表示供货时根据安装位置，加邦飞利使用的合成油。

DL
输出轴采用双油封。

DV
输入轴采用双油封（仅对一体化减速电机适用）。

VV
输入轴采用氟橡胶材质的油封。

PV
输入输出轴都采用氟橡胶材质的油封。

RB
C12, C22, C32, C36, C41, C51和C61减速机一般配置标准齿隙，带RB选项的减速机则配置低齿隙。下表是减速机对应的齿隙数值。

(B 13)

		standard			RB	
C 05	i =	5.5 ; 9.3 ; 15.6 ; 27.1	6.7 ; 7.4 ; 11.2 ; 12.5 ; 18.9 ; 21.0 ; 32.8_44.7		—	
	φ [']	**34**	**29**			
C 12	i =	2.8_6.2	7.6_66.2		2.8_6.2	7.6_66.2
	φ [']	**55**	**29**		**—**	**13**
C 22	i =	2.7_6.1	7.1_261.0		2.7_6.1	7.1_261.0
	φ [']	**47**	**25**		**—**	**12**
C 32	i =	2.9_6.3	7.2_274.7		2.9_6.3	7.2_274.7
	φ [']	**39**	**21**		**—**	**11**
C 36	i =	2.7_5.8	6.8_19.0	22.1_848.5	2.7_5.8	6.8_848.5
	φ [']	**37**	**20**	**17**	**—**	**10**
C 41 2	i =	2.7_6.0	6.4_44.8	—	2.7_6.0	6.4_44.8
	φ [']	**34**	**17**		**—**	**9**
C 41 3/4	i =	**—**	**—**	28.5_855.5	**—**	28.5_855.5
	φ [']			**15**		**9**
C 51 2	i =	2.6_5.6	7.0_57.0	—	2.6_5.6	7.0_57.0
	φ [']	**32**	**15**		**—**	**8**
C 51 3/4	i =	**—**	**—**	21.8_884.9	**—**	21.8_884.9
	φ [']			**13**		**8**
C 61 2	i =	2.8_6.0	6.7_38.0	—	2.8_6.0	6.7_38.0
	φ [']	**27**	**13**		**12**	**7**
C 61 3/4	i =	**—**	**—**	26.8_796.1	**—**	26.8_796.1
	φ [']			**11**		**7**
C 70	i =	4.6_34.7	41.3_1476		—	
	φ [']	**18**	**20**			
C 80	i =	5.6_39.1	43.5_1481		—	
	φ [']	**16**	**18**			
C 90	i =	5.2_35.1	39.4_1240		—	
	φ [']	**16**	**18**			
C 100	i =	4.9_29.6	34.3_1081		—	
	φ [']	**14**	**16**			

交货期请联系邦飞利销售网络。

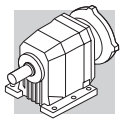

表面保护

如果没有特别的防护等级要求，减速机喷漆（铁）表面的耐腐蚀等级至少达到C2 (UNI EN ISO 12944-2)，如果要求更高，可以提供**C3**和**C4**等级。

(B 14)

表面保护	典型环境	最高表面温度.	按UNI EN ISO 12944-2对腐蚀进行分类
C3	城市和工业环境，相对湿度高达100%的（中等空气污染）	120°C	C3
C4	工业区、沿海地区、化工厂，相对湿度高达100%的（重度空气污染）	120°C	C4

C3或**C4**保护等级的减速机颜色有多种选择。如果没有特定的要求（见“喷漆”选项），默认颜色为RAL 7042。
另外也可以提供**C5**等级（UNI EN ISO 12944-2）。详细情况请联系我们的技术服务部门。

喷漆

下表为减速机表面保护等级为C3或C4时可选用的颜色。

(B 15)

油漆	颜色	RAL 号码
RAL7042*	交通灰A	7042
RAL5010	龙胆蓝	5010
RAL9005	乌黑	9005
RAL9006	铝白色	9006
RAL9010	纯白色	9010

* 如没指定颜色，减速机按标准颜色供货。

说明- “喷漆”选项只能和“表面保护”选项结合选择。

认证

AC – 符合性证明
此文件证明产品符合采购订单以及邦飞利质量体系的适用程序。

CC – 检查证明
此文件要求检查订单的合规性，产品外观和配合尺寸；
以及无负载情况下主要的功能性参数，和在静态和动态时油封的密封性。
被检查的产品取样于同一海运批次并单独做好标记。

21.2 电机选项

AL, AR
电机部分的逆止器参见本样本中电机章节，并且应用于一体式M,ME电机或MX。
下表为基于不同选项对应的减速机可转动方向。

(B 17)

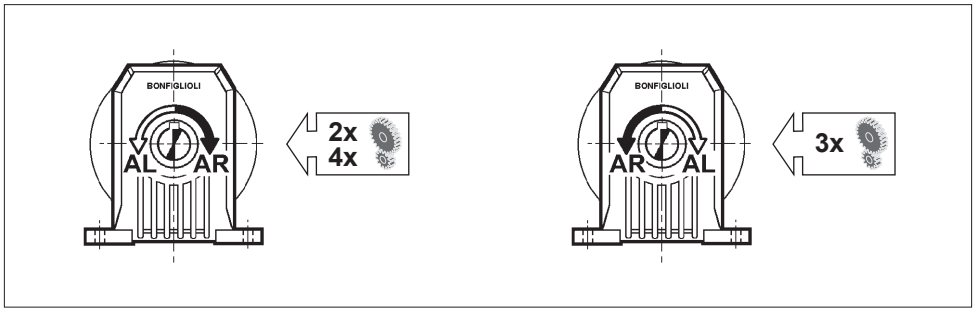

更多信息请咨询邦飞利电机部门。

22 安装位置和接线盒位置

从风扇端看电机可以确定电机接线盒的位置；标准位置以黑字表示 (W)。

制动器手动释放杆的角度位置
除非另有说明，否则制动电机的手动释放装置位于接线盒90°位置。
不同角度可以通过相应的选项来指定。

(B 16)

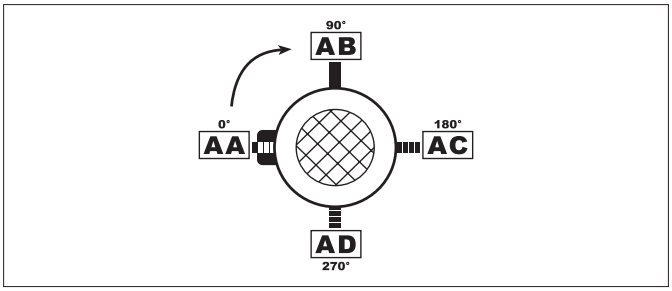

C ... P

B3

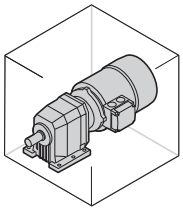
_S

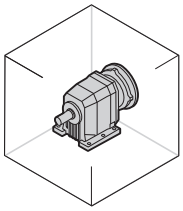
_P(IEC) _SK / _SC

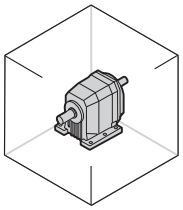
_HS

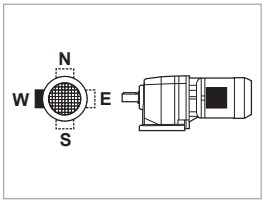

B6

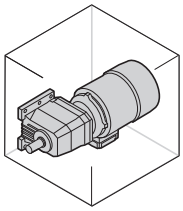
_S

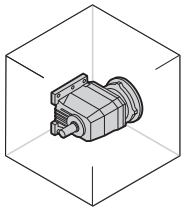
_P(IEC) _SK / _SC

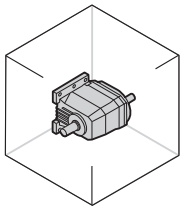
_HS

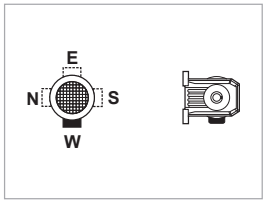

B7

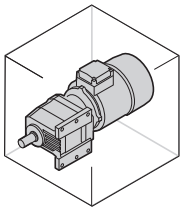
_S

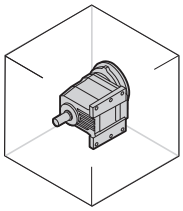
_P(IEC) _SK / _SC

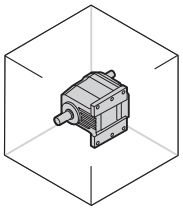
_HS

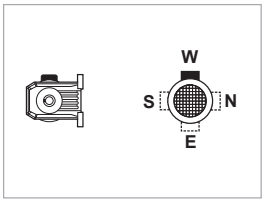

B8

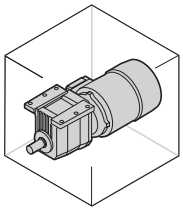
_S

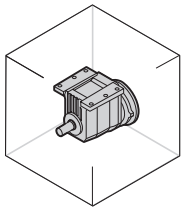
_P(IEC) _SK / _SC

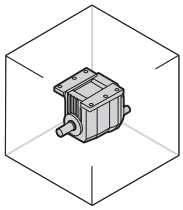
_HS

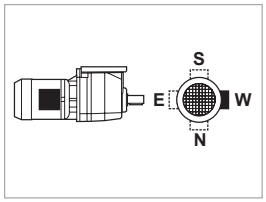

V5

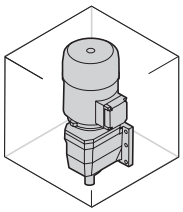
_S

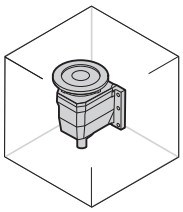
_P(IEC) _SK / _SC

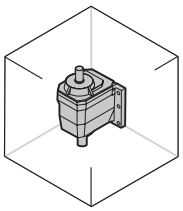
_HS

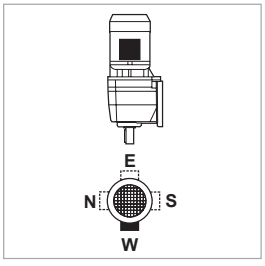

V6

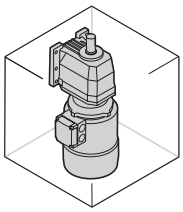
_S

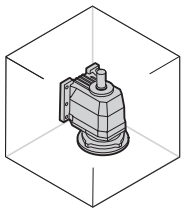
_P(IEC) _SK / _SC

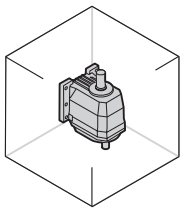
_HS



W = Default

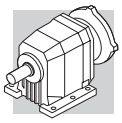

C ... F C ... U C ... UF

B5

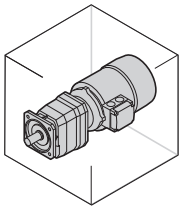

_S

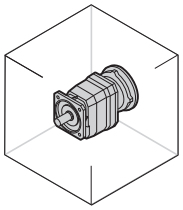

_P(IEC) _SK / _SC

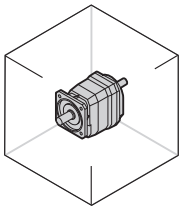

_HS

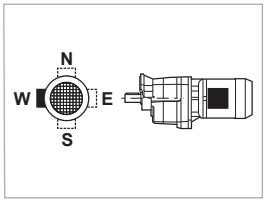

B51

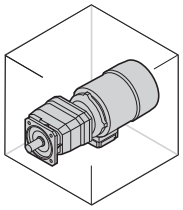

_S

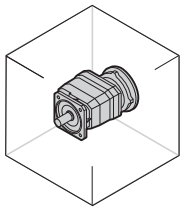

_P(IEC) _SK / _SC

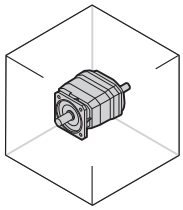

_HS

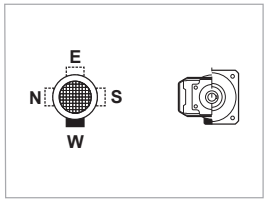

B53

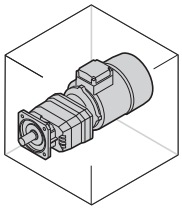

_S

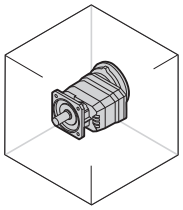

_P(IEC) _SK / _SC

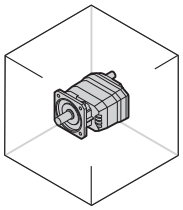

_HS

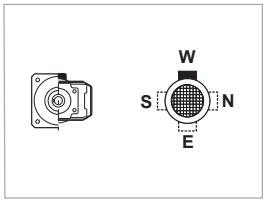

B52

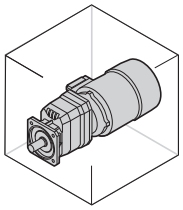

_S

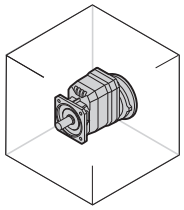

_P(IEC) _SK / _SC

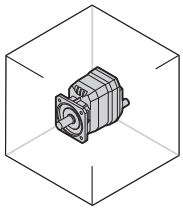

_HS

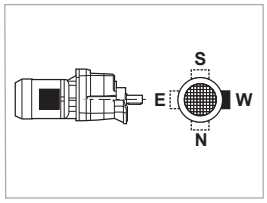

V1

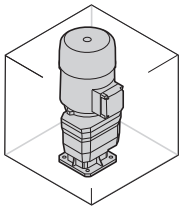

_S

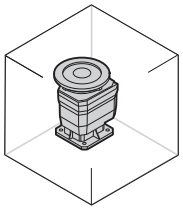

_P(IEC) _SK / _SC

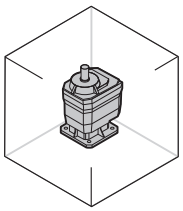

_HS

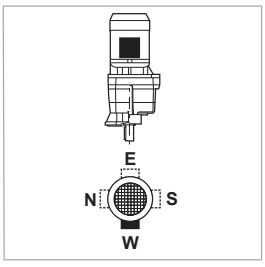

V3

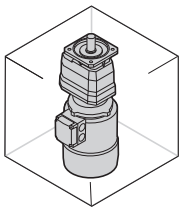

_S

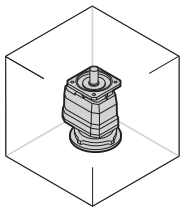

_P(IEC) _SK / _SC

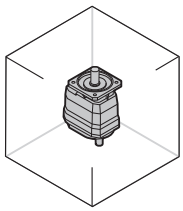

_HS



W = Default

23 悬臂载荷

作用于输入轴/输出轴上的扭矩将在相应的轴上产生径向力。轴的合成力必须与轴承和轴的许用载荷相一致。也就是说轴所受的力（R_{c1}为输入轴，R_{c2}为输出轴）必须小于或等于许用的悬臂载荷（R_{n1}为输入轴，R_{n2}为输出轴）。许用悬臂载荷在减速机选型表列出。
下面给出的公式中，下标1指输入轴，下标2指输出轴。外部传动产生的载荷可以通过下面的公式近似求出：

$$R_{c1}\,[N] = \frac{2000 \cdot M_1[Nm] \cdot K_r}{d\,[mm]} \quad ; \quad R_{c2}\,[N] = \frac{2000 \cdot M_2[Nm] \cdot K_r}{d\,[mm]} \qquad (15)$$

(B 18)

M_1 [Nm]	输入轴所受的转矩
M_2 [Nm]	输出轴所受的转矩
d [mm]	连接到轴上部件的节径
K_r = 1	链条传动

K_r = 1,25	齿轮传动
K_r = 1,5	三角皮带传动
K_r = 2,0	(平)皮带传动

悬臂载荷的校核根据作用在轴中点或远端而不同：

(B 19)

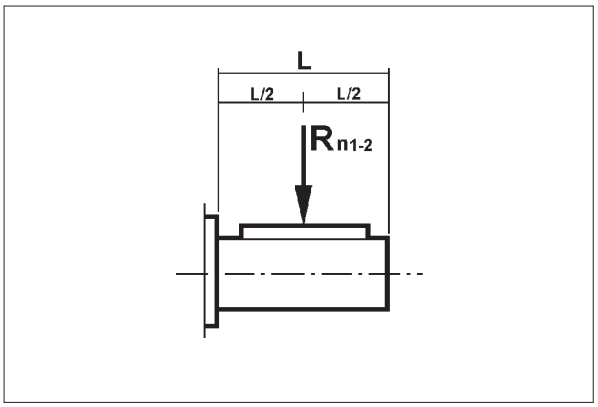

(B 20)

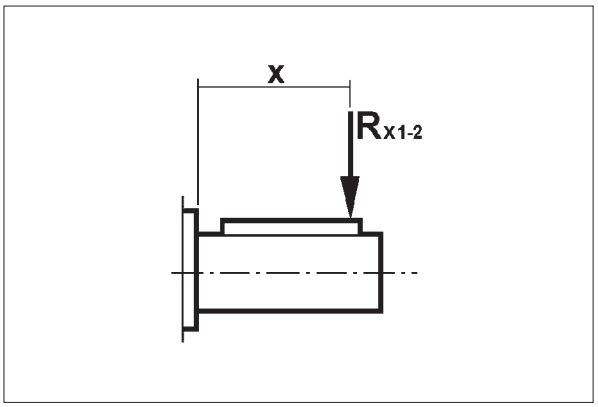

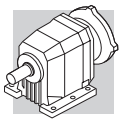

a)径向力作用在轴中点，表(B19)

轴的径向力与样本的许用悬臂载荷比较应该用以下条件校核：
$R_{c1} \leq R_{n1}$ [输入轴]

或

$R_{c2} \leq R_{n2}$ [输出轴]

b) 径向力不作用在轴中点，表(B20)

当载荷作用在距轴肩“x”的地方，许用载荷必须针对这个位置计算。
修正的许用悬臂载荷R_{x1}（输入）和R_{x2}（输出）可分别通过原始额定值R_{n1}和R_{n2}与如下系数计算出来：

$$\frac{a}{b+x} \qquad (16)$$

(B 21)

	负载位置系数					
	输出轴			输入轴		
	a	**b**	**c**	**a**	**b**	**c**
C 05 2	38	18	250	—	—	—
C 12 2	46	26	450	21	1	300
C 22 2	53	28	550	40	20	350
C 22 3	53	28	550	21	1	300
C 32 2	60.5	30.5	750	41.5	21.5	350
C 32 3	60.5	30.5	750	21	1	300
C 36 2 - C 36 3	69.5	34.5	800	51.5	26.5	450
C 36 4	69.5	34.5	800	21	1	300
C 41 2 - C 41 3	69.5	34.5	850	51.5	26.5	450
C 41 4	69.5	34.5	850	40	20	350
C 51 2 - C 51 3	76.5	36.5	900	51.5	26.5	450
C 51 4	76.5	36.5	900	41.5	21.5	350
C 61 2 - C 61 3	95.5	45.5	1000	57.5	27.5	450
C 61 4	95.5	45.5	1000	51.5	26.5	450
C 70 2 - C 70 3	114	54	1200	86	31	1000
C 70 4	114	54	1200	49.5	24.5	450
C 80 2 - C 80 3	131	61	1500	86	31	1000
C 80 4	131	61	1500	49.5	24.5	450
C 90 2 - C 90 3	161	76	2000	116	46	1400
C 90 4	161	76	2000	49.5	24.5	450
C 100 2 - C 100 3	163.5	58.5	2500	116	46	1400
C 100 4	163.5	58.5	2500	49.5	24.5	450

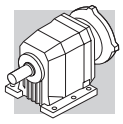

校核程序如下：

输入轴

计算：

$$R_{x1} = R_{n1} \cdot \frac{a}{b + x} \quad (17)$$

X需要满足的条件：

$$\frac{L}{2} \leq x \leq c \quad (18)$$

最后必须校核下列条件：

$$R_{c1} \leq R_{x1} \quad (19)$$

输出轴

计算：

$$R_{x2} = R_{n2} \cdot \frac{a}{b + x} \quad (20)$$

X需要满足的条件：

$$\frac{L}{2} \leq x \leq c \quad (21)$$

最后必须校核下列条件：

$$R_{c2} \leq R_{x2} \quad (22)$$

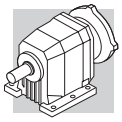

24 轴向载荷A_{n1}, A_{n2}

输入输出轴许用轴向载荷A_{n1}和A_{n2}可分别由输入输出径向载荷R_{n1}和R_{n2}，通过以下公式计算得出：

$$A_{n1} = R_{n1} \cdot 0.2$$
$$A_{n2} = R_{n2} \cdot 0.2 \quad (23)$$

以上公式也适用轴向径向载荷同时作用的情况。仅当没有悬臂载荷作用时，许用轴向载荷A_n等于额定悬臂载荷R_n的50%。
如果轴向载荷超过许用值或大于径向载荷，请联系邦飞利对具体应用进行深入分析。

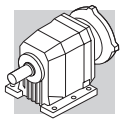

25 减速电机选型表

不带制动器的电机选型时需要考虑 EC 640/2009标准 (见本样本的M章节)，当电机额定功率小于0.75KW时，BN/M电机都可选。
考虑到EC 640/2009标准并不适用带制动器的电机，所以制动电机只有BN/M电机可选，不包括BX, BE, MX和ME电机。

0.09 kW

n_2 min-1	M_2 Nm	S	i	R_{n2} N	IE1		IEC IE1	
1.0	760	0.8	855.5	7000	**C414_855.5 S05 M05A6**	138	**C414_855.5 P63 BN63A6**	139
1.2	654	0.9	735.9	7000	**C414_735.9 S05 M05A6**	138	**C414_735.9 P63 BN63A6**	139
1.3	597	1.0	671.3	7000	**C414_671.3 S05 M05A6**	138	**C414_671.3 P63 BN63A6**	139
1.5	511	0.9	574.7	6500	**C364_574.7 S05 M05A6**	134	**C364_574.7 P63 BN63A6**	139
1.6	483	1.2	543.5	7000	**C414_543.5 S05 M05A6**	138	**C414_543.5 P63 BN63A6**	139
1.9	407	1.1	458.4	6500	**C364_458.4 S05 M05A6**	134	**C364_458.4 P63 BN63A6**	139
2.0	400	1.5	450.2	7000	**C414_450.2 S05 M05A6**	138	**C414_450.2 P63 BN63A6**	139
2.6	301	1.5	341.7	6500	**C364_341.7 S05 M05A6**	134	**C364_341.7 P63 BN63A6**	139
2.6	296	2.0	333.4	7000	**C414_333.4 S05 M05A6**	138	**C414_333.4 P63 BN63A6**	139
3.2	250	1.1	274.7	5500	**C323_274.7 S05 M05A6**	130	**C323_274.7 P63 BN63A6**	131
3.9	205	1.0	225.8	5000	**C223_225.8 S05 M05A6**	126	**C223_225.8 P63 BN63A6**	127
4.1	196	1.5	215.6	5500	**C323_215.6 S05 M05A6**	130	**C323_215.6 P63 BN63A6**	131
4.9	162	1.2	178.5	5000	**C223_178.5 S05 M05A6**	126	**C223_178.5 P63 BN63A6**	127
5.8	138	1.5	151.7	5000	**C223_151.7 S05 M05A6**	126	**C223_151.7 P63 BN63A6**	127
5.9	135	2.2	148.4	5500	**C323_148.4 S05 M05A6**	130	**C323_148.4 P63 BN63A6**	131
7.2	111	1.8	122.2	5000	**C223_122.2 S05 M05A6**	126	**C223_122.2 P63 BN63A6**	127
7.2	111	2.7	122.4	5500	**C323_122.4 S05 M05A6**	130	**C323_122.4 P63 BN63A6**	131
7.9	102	2.0	112.0	5000	**C223_112.0 S05 M05A6**	126	**C223_112.0 P63 BN63A6**	127
8.8	91	2.2	100.2	5000	**C223_100.2 S05 M05A6**	126	**C223_100.2 P63 BN63A6**	127
10.7	75	2.7	82.6	5000	**C223_82.6 S05 M05A6**	126	**C223_82.6 P63 BN63A6**	127
13.3	61	1.5	66.2	2000	**C122_66.2 S05 M05A6**	122	**C122_66.2 P63 BN63A6**	123
16.0	51	1.8	55.2	2000	**C122_55.2 S05 M05A6**	122	**C122_55.2 P63 BN63A6**	123
18.5	44	2.0	47.6	2000	**C122_47.6 S05 M05A6**	122	**C122_47.6 P63 BN63A6**	123
19.7	42	1.1	44.7	1170	**C052_44.7 S05 M05A6**	121		
20.8	39	2.3	42.3	2000	**C122_42.3 S05 M05A6**	122	**C122_42.3 P63 BN63A6**	123
21.8	38	1.2	40.3	1150	**C052_40.3 S05 M05A6**	121		
23.8	34	2.6	37.0	2000	**C122_37.0 S05 M05A6**	122	**C122_37.0 P63 BN63A6**	123
24.2	34	1.3	36.4	1140	**C052_36.4 S05 M05A6**	121		
26.8	31	1.5	32.8	1110	**C052_32.8 S05 M05A6**	121		
26.8	31	2.9	32.8	2000	**C122_32.8 S05 M05A6**	122	**C122_32.8 P63 BN63A6**	123
30	27	1.7	44.7	1170	**C052_44.7 S0 M0B4**	121		
33	25	1.8	40.3	990	**C052_40.3 S0 M0B4**	121		
37	22	2.0	36.4	980	**C052_36.4 S0 M0B4**	121		
41	20	2.3	32.8	960	**C052_32.8 S0 M0B4**	121		
42	19	2.3	21.0	1020	**C052_21.0 S05 M05A6**	121		

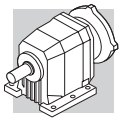

0.09 kW

n_2 min-1	M_2 Nm	S	i	R_{n2} N	IE1		IEC IE1	
50	16	2.7	27.1	930	**C052_27.1 S0 M0B4**	121		
56	15	3.1	15.6	950	**C052_15.6 S05 M05A6**	121		
66	12	6.5	13.4	2000	**C122_13.4 S05 M05A6**	122	**C122_13.4 P63 BN63A6**	123
71	12	3.9	12.5	900	**C052_12.5 S05 M05A6**	121		
74	11	7.0	11.9	2000	**C122_11.9 S05 M05A6**	122	**C122_11.9 P63 BN63A6**	123
78	10	4.3	11.2	880	**C052_11.2 S05 M05A6**	121		
88	9	7.7	10.1	2000	**C122_10.1 S05 M05A6**	122	**C122_10.1 P63 BN63A6**	123
95	9	5.2	9.3	830	**C052_9.3 S05 M05A6**	121		
100	8	8.4	8.8	2000	**C122_8.8 S05 M05A6**	122	**C122_8.8 P63 BN63A6**	123
119	7	6.5	7.4	780	**C052_7.4 S05 M05A6**	121		
132	6	7.3	6.7	760	**C052_6.7 S05 M05A6**	121		
146	6	10.9	6.2	1960	**C122_6.2 S05 M05A6**	122	**C122_6.2 P63 BN63A6**	123
157	5	11.1	5.6	1850	**C122_5.6 S05 M05A6**	122	**C122_5.6 P63 BN63A6**	123
159	5	8.8	5.5	720	**C052_5.5 S05 M05A6**	121		
187	4	12.6	4.9	1810	**C122_4.9 S05 M05A6**	122	**C122_4.9 P63 BN63A6**	123
205	4	13.0	4.3	1730	**C122_4.3 S05 M05A6**	122	**C122_4.3 P63 BN63A6**	123
249	3	15.0	3.7	1650	**C122_3.7 S05 M05A6**	122	**C122_3.7 P63 BN63A6**	123
275	3	15.4	3.2	1580	**C122_3.2 S05 M05A6**	122	**C122_3.2 P63 BN63A6**	123
329	2	17.3	2.8	1510	**C122_2.8 S05 M05A6**	122	**C122_2.8 P63 BN63A6**	123

0.12 kW

n_2 min-1	M_2 Nm	S	i	R_{n2} N	IE1		IEC IE1	
0.98	1061	0.9	884.9	10000			**C514_884.9 P63 BN63B6**	143
1.2	860	1.2	717.7	10000			**C514_717.7 P63 BN63B6**	143
1.5	681	0.9	855.5	7000	**C414_855.5 S05 M05A4**	138	**C414_855.5 P63 BN63A4**	139
1.6	643	1.6	808.0	10000			**C514_808.0 P63 BN63A4**	143
1.7	621	1.0	780.4	7000	**C414_780.4 S05 M05A4**	138	**C414_780.4 P63 BN63A4**	139
1.8	586	1.0	735.9	7000	**C414_735.9 S05 M05A4**	138	**C414_735.9 P63 BN63A4**	139
2.0	534	1.1	671.3	7000	**C414_671.3 S05 M05A4**	138	**C414_671.3 P63 BN63A4**	139
2.0	509	0.9	665.9	6500	**C364_665.9 S05 M05A4**	134	**C364_665.9 P63 BN63A4**	139
2.2	474	1.3	595.8	7000	**C414_595.8 S05 M05A4**	138	**C414_595.8 P63 BN63A4**	139
2.3	440	1.0	574.7	6500	**C364_574.7 S05 M05A4**	134	**C364_574.7 P63 BN63A4**	139
2.4	433	1.4	543.5	7000	**C414_543.5 S05 M05A4**	138	**C414_543.5 P63 BN63A4**	139
2.6	396	1.1	517.2	6500	**C364_517.2 S05 M05A4**	134	**C364_517.2 P63 BN63A4**	139
2.7	393	1.5	493.5	7000	**C414_493.5 S05 M05A4**	138	**C414_493.5 P63 BN63A4**	139
2.9	351	1.3	458.4	6500	**C364_458.4 S05 M05A4**	134	**C364_458.4 P63 BN63A4**	139
2.9	358	1.7	450.2	7000	**C414_450.2 S05 M05A4**	138	**C414_450.2 P63 BN63A4**	139
3.1	333	1.8	418.5	7000	**C414_418.5 S05 M05A4**	138	**C414_418.5 P63 BN63A4**	139
3.2	321	1.4	420.2	6500	**C364_420.2 S05 M05A4**	134	**C364_420.2 P63 BN63A4**	139
3.4	304	2.0	381.8	7000	**C414_381.8 S05 M05A4**	138	**C414_381.8 P63 BN63A4**	139
3.6	289	1.6	377.9	6500	**C364_377.9 S05 M05A4**	134	**C364_377.9 P63 BN63A4**	139
3.9	265	2.3	333.4	7000	**C414_333.4 S05 M05A4**	138	**C414_333.4 P63 BN63A4**	139
4.0	261	1.7	341.7	6500	**C364_341.7 S05 M05A4**	134	**C364_341.7 P63 BN63A4**	139
4.2	244	1.8	318.9	6500	**C364_318.9 S05 M05A4**	134	**C364_318.9 P63 BN63A4**	139
4.3	242	2.5	304.2	7000	**C414_304.2 S05 M05A4**	138	**C414_304.2 P63 BN63A4**	139
4.6	223	2.0	290.9	6500	**C364_290.9 S05 M05A4**	134	**C364_290.9 P63 BN63A4**	139
4.9	219	0.9	178.5	5000	**C223_178.5 S05 M05B6**	126	**C223_178.5 P63 BN63B6**	127

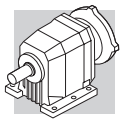

0.12 kW

n_2 min-1	M_2 Nm	S	i	R_{n2} N	IE1		IEC IE1	
4.9	217	1.2	274.7	5500	**C323_274.7 S05 M05A4**	130	**C323_274.7 P63 BN63A4**	131
5.0	209	2.9	263.0	7000	**C414_263.0 S05 M05A4**	138	**C414_263.0 P63 BN63A4**	139
5.3	195	2.3	255.0	6500	**C364_255.0 S05 M05A4**	134	**C364_255.0 P63 BN63A4**	139
5.5	193	1.3	244.2	5500	**C323_244.2 S05 M05A4**	130	**C323_244.2 P63 BN63A4**	131
5.8	177	2.5	230.9	6500	**C364_230.9 S05 M05A4**	134	**C364_230.9 P63 BN63A4**	139
6.0	178	1.0	225.8	5000	**C223_225.8 S05 M05A4**	126	**C223_225.8 P63 BN63A4**	127
6.3	170	1.8	215.6	5500	**C323_215.6 S05 M05A4**	130	**C323_215.6 P63 BN63A4**	131
6.5	163	2.8	206.4	6500	**C363_206.4 S05 M05A4**	134	**C363_206.4 P63 BN63A4**	135
6.7	159	1.2	200.7	5000	**C223_200.7 S05 M05A4**	126	**C223_200.7 P63 BN63A4**	127
7.3	147	2.0	186.0	5500	**C323_186.0 S05 M05A4**	130	**C323_186.0 P63 BN63A4**	131
7.4	145	3.1	183.5	6500	**C363_183.5 S05 M05A4**	134	**C363_183.5 P63 BN63A4**	135
7.6	141	1.4	178.5	5000	**C223_178.5 S05 M05A4**	126	**C223_178.5 P63 BN63A4**	127
8.1	132	2.3	167.4	5500	**C323_167.4 S05 M05A4**	130	**C323_167.4 P63 BN63A4**	131
8.9	120	1.7	151.7	5000	**C223_151.7 S05 M05A4**	126	**C223_151.7 P63 BN63A4**	127
9.1	117	2.6	148.4	5500	**C323_148.4 S05 M05A4**	130	**C323_148.4 P63 BN63A4**	131
9.9	108	1.9	136.5	5000	**C223_136.5 S05 M05A4**	126	**C223_136.5 P63 BN63A4**	127
9.9	108	2.8	136.0	5500	**C323_136.0 S05 M05A4**	130	**C323_136.0 P63 BN63A4**	131
11.0	97	3.1	122.4	5500	**C323_122.4 S05 M05A4**	130	**C323_122.4 P63 BN63A4**	131
11.0	97	2.1	122.2	5000	**C223_122.2 S05 M05A4**	126	**C223_122.2 P63 BN63A4**	127
12.1	89	2.3	112.0	5000	**C223_112.0 S05 M05A4**	126	**C223_112.0 P63 BN63A4**	127
13.5	79	2.5	100.2	5000	**C223_100.2 S05 M05A4**	126	**C223_100.2 P63 BN63A4**	127
15.3	70	2.9	88.5	5000	**C223_88.5 S05 M05A4**	126	**C223_88.5 P63 BN63A4**	127
16.3	65	3.1	82.6	5000	**C223_82.6 S05 M05A4**	126	**C223_82.6 P63 BN63A4**	127
20.4	53	1.7	66.2	2000	**C122_66.2 S05 M05A4**	122	**C122_66.2 P63 BN63A4**	123
21.3	51	2.5	63.3	5000	**C222_63.3 S05 M05A4**	126	**C222_63.3 P63 BN63A4**	127
24.5	45	2.0	55.2	2000	**C122_55.2 S05 M05A4**	122	**C122_55.2 P63 BN63A4**	123
24.7	44	3.5	54.7	5000	**C222_54.7 S05 M05A4**	126	**C222_54.7 P63 BN63A4**	127
28.4	38	2.3	47.6	2000	**C122_47.6 S05 M05A4**	122	**C122_47.6 P63 BN63A4**	123
29.3	37	1.2	44.7	1010	**C052_44.7 S05 M05A4**	121		
32	34	2.6	42.3	2000	**C122_42.3 S05 M05A4**	122	**C122_42.3 P63 BN63A4**	123
33	34	1.3	40.3	990	**C052_40.3 S05 M05A4**	121		
36	30	1.5	36.4	980	**C052_36.4 S05 M05A4**	121		
36	30	3.0	37.0	2000	**C122_37.0 S05 M05A4**	122	**C122_37.0 P63 BN63A4**	123
40	27	1.6	32.8	960	**C052_32.8 S05 M05A4**	121		
41	26	3.4	32.8	2000	**C122_32.8 S05 M05A4**	122	**C122_32.8 P63 BN63A4**	123
48	23	2.0	27.1	930	**C052_27.1 S05 M05A4**	121		
56	20	2.3	15.6	900	**C052_15.6 S05 M05B6**	121		
62	18	2.6	21.0	890	**C052_21.0 S05 M05A4**	121		
69	16	2.5	18.9	860	**C052_18.9 S05 M05A4**	121		
78	14	3.2	11.2	850	**C052_11.2 S05 M05B6**	121		
84	13	3.1	15.6	820	**C052_15.6 S05 M05A4**	121		
105	10	3.8	12.5	780	**C052_12.5 S05 M05A4**	121		
117	9	4.3	11.2	760	**C052_11.2 S05 M05A4**	121		
130	8	5.4	6.7	740	**C052_6.7 S05 M05B6**	121		
141	8	3.9	9.3	720	**C052_9.3 S05 M05A4**	121		
177	6	4.8	7.4	680	**C052_7.4 S05 M05A4**	121		
196	6	5.4	6.7	660	**C052_6.7 S05 M05A4**	121		

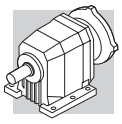

0.18 kW

n_2 min-1	M_2 Nm	S	i	R_{n2} N	IE1		IEC IE1	
0.66	2367	1.0	1362	25000			**C704_1362 P71 BN71A6**	151
0.84	1858	1.2	1069	25000			**C704_1069 P71 BN71A6**	151
1.2	1262	1.3	726.3	16000	**C614_726.3 S1 M1SC6**	146	**C614_726.3 P71 BN71A6**	147
1.3	1248	0.8	717.7	10000	**C514_717.7 S1 M1SC6**	142	**C514_717.7 P71 BN71A6**	143
1.5	1049	1.0	884.9	10000			**C514_884.9 P63 BN63B4**	143
1.6	958	1.0	808.0	10000			**C514_808.0 P63 BN63B4**	143
1.6	955	1.0	549.7	10000	**C514_549.7 S1 M1SC6**	142	**C514_549.7 P71 BN71A6**	143
1.8	861	1.9	726.3	16000			**C614_726.3 P63 BN63B4**	147
1.8	851	1.2	717.7	10000			**C514_717.7 P63 BN63B4**	143
1.9	806	1.2	463.9	10000	**C514_463.9 S1 M1SC6**	142	**C514_463.9 P71 BN71A6**	143
1.9	803	2.0	462.0	16000	**C614_462.0 S1 M1SC6**	146	**C614_462.0 P71 BN71A6**	147
2.0	796	0.8	671.3	7000	**C414_671.3 S05 M05B4**	138	**C414_671.3 P63 BN63B4**	139
2.0	783	0.8	450.2	7000	**C414_450.2 S1 M1SC6**	138	**C414_450.2 P71 BN71A6**	139
2.0	777	1.3	655.4	10000			**C514_655.4 P63 BN63B4**	143
2.2	727	0.8	418.5	7000	**C414_418.5 S1 M1SC6**	138	**C414_418.5 P71 BN71A6**	139
2.2	723	1.4	415.7	10000	**C514_415.7 S1 M1SC6**	142	**C514_415.7 P71 BN71A6**	143
2.2	706	0.8	595.8	7000	**C414_595.8 S05 M05B4**	138	**C414_595.8 P63 BN63B4**	139
2.4	660	1.5	379.6	10000	**C514_379.6 S1 M1SC6**	142	**C514_379.6 P71 BN71A6**	143
2.4	644	0.9	543.5	7000	**C414_543.5 S05 M05B4**	138	**C414_543.5 P63 BN63B4**	139
2.6	587	0.8	341.7	6300	**C364_341.7 S1 M1SC6**	134	**C364_341.7 P71 BN71A6**	139
2.7	585	1.0	493.5	7000	**C414_493.5 S05 M05B4**	138	**C414_493.5 P63 BN63B4**	139
2.9	534	1.1	450.2	7000	**C414_450.2 S05 M05B4**	138	**C414_450.2 P63 BN63B4**	139
2.9	536	0.8	458.4	6500	**C364_458.4 S05 M05B4**	134	**C364_458.4 P63 BN63B4**	139
3.1	492	0.9	420.2	6500	**C364_420.2 S05 M05B4**	134	**C364_420.2 P63 BN63B4**	139
3.2	496	1.2	418.5	7000	**C414_418.5 S05 M05B4**	138	**C414_418.5 P63 BN63B4**	139
3.5	452	1.3	381.8	7000	**C414_381.8 S05 M05B4**	138	**C414_381.8 P63 BN63B4**	139
3.5	442	1.0	377.9	6500	**C364_377.9 S05 M05B4**	134	**C364_377.9 P63 BN63B4**	139
3.9	400	1.1	341.7	6500	**C364_341.7 S05 M05B4**	134	**C364_341.7 P63 BN63B4**	139
4.0	395	1.5	333.4	7000	**C414_333.4 S05 M05B4**	138	**C414_333.4 P63 BN63B4**	139
4.1	373	1.2	318.9	6500	**C364_318.9 S05 M05B4**	134	**C364_318.9 P63 BN63B4**	139
4.3	371	1.6	209.1	7000	**C413_209.1 S1 M1SC6**	138	**C413_209.1 P71 BN71A6**	139
4.3	360	1.7	304.2	7000	**C414_304.2 S05 M05B4**	138	**C414_304.2 P63 BN63B4**	139
4.5	340	1.3	290.9	6500	**C364_290.9 S05 M05B4**	134	**C364_290.9 P63 BN63B4**	139
4.7	339	1.8	190.8	7000	**C413_190.8 S1 M1SC6**	138	**C413_190.8 P71 BN71A6**	139
4.8	330	0.9	186.0	5500	**C323_186.0 S1 M1SC6**	130	**C323_186.0 P71 BN71A6**	131
5.0	312	1.9	263.0	7000	**C414_263.0 S05 M05B4**	138	**C414_263.0 P63 BN63B4**	139
5.2	298	1.5	255.0	6500	**C364_255.0 S05 M05B4**	134	**C364_255.0 P63 BN63B4**	139
5.4	297	1.0	167.4	5500	**C323_167.4 S1 M1SC6**	130	**C323_167.4 P71 BN71A6**	131
5.4	295	0.9	244.2	5500	**C323_244.2 S05 M05B4**	130	**C323_244.2 P63 BN63B4**	131
5.7	270	1.7	230.9	6500	**C364_230.9 S05 M05B4**	134	**C364_230.9 P63 BN63B4**	139
6.1	261	1.2	215.6	5500	**C323_215.6 S05 M05B4**	130	**C323_215.6 P63 BN63B4**	131
6.4	250	1.8	206.4	6500	**C363_206.4 S05 M05B4**	134	**C363_206.4 P63 BN63B4**	135
7.1	225	1.3	186.0	5500	**C323_186.0 S05 M05B4**	130	**C323_186.0 P63 BN63B4**	131
7.2	222	2.0	183.5	6500	**C363_183.5 S05 M05B4**	134	**C363_183.5 P63 BN63B4**	135
7.4	216	0.9	178.5	5000	**C223_178.5 S05 M05B4**	126	**C223_178.5 P63 BN63B4**	127
7.9	202	1.5	167.4	5500	**C323_167.4 S05 M05B4**	130	**C323_167.4 P63 BN63B4**	131
8.1	196	2.3	162.0	6500	**C363_162.0 S05 M05B4**	134	**C363_162.0 P63 BN63B4**	135
8.7	183	1.1	151.7	5000	**C223_151.7 S05 M05B4**	126	**C223_151.7 P63 BN63B4**	127
8.9	179	1.7	148.4	5500	**C323_148.4 S05 M05B4**	130	**C323_148.4 P63 BN63B4**	131
9.4	169	2.7	139.8	6500	**C363_139.8 S05 M05B4**	134	**C363_139.8 P63 BN63B4**	135
9.7	165	1.2	136.5	5000	**C223_136.5 S05 M05B4**	126	**C223_136.5 P63 BN63B4**	127
9.7	164	1.8	136.0	5500	**C323_136.0 S05 M05B4**	130	**C323_136.0 P63 BN63B4**	131
10.5	152	3.0	125.8	6500	**C363_125.8 S05 M05B4**	134	**C363_125.8 P63 BN63B4**	135
10.8	148	2.0	122.4	5500	**C323_122.4 S05 M05B4**	130	**C323_122.4 P63 BN63B4**	131
10.8	148	1.4	122.2	5000	**C223_122.2 S05 M05B4**	126	**C223_122.2 P63 BN63B4**	127
11.8	135	1.5	112.0	5000	**C223_112.0 S05 M05B4**	126	**C223_112.0 P63 BN63B4**	127
11.8	135	3.3	111.5	6500	**C363_111.5 S05 M05B4**	134	**C363_111.5 P63 BN63B4**	135
11.9	134	2.2	110.6	5500	**C323_110.6 S05 M05B4**	130	**C323_110.6 P63 BN63B4**	131
12.8	125	2.4	103.3	5500	**C323_103.3 S05 M05B4**	130	**C323_103.3 P63 BN63B4**	131
12.9	124	3.6	102.2	6500	**C363_102.2 S05 M05B4**	134	**C363_102.2 P63 BN63B4**	135
13.2	121	1.7	100.2	5000	**C223_100.2 S05 M05B4**	126	**C223_100.2 P63 BN63B4**	127
14.0	114	2.6	94.2	5500	**C323_94.2 S05 M05B4**	130	**C323_94.2 P63 BN63B4**	131
14.9	107	1.9	88.5	5000	**C223_88.5 S05 M05B4**	126	**C223_88.5 P63 BN63B4**	127
16.0	100	2.0	82.6	5000	**C223_82.6 S05 M05B4**	126	**C223_82.6 P63 BN63B4**	127
16.0	100	3.0	82.6	5500	**C323_82.6 S05 M05B4**	130	**C323_82.6 P63 BN63B4**	131

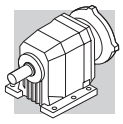

0.18 kW

n_2 min-1	M_2 Nm	S	i	R_{n2} N	IE1		IEC IE1	
17.6	90	2.2	74.8	5000	**C223_74.8 S05 M05B4**	126	**C223_74.8 P63 BN63B4**	127
17.7	90	3.2	74.7	5500	**C323_74.7 S05 M05B4**	130	**C323_74.7 P63 BN63B4**	131
19.8	83	2.6	66.8	5500	**C322_66.8 S05 M05B4**	130	**C322_66.8 P63 BN63B4**	131
20.0	82	1.1	66.2	2000	**C122_66.2 S05 M05B4**	122	**C122_66.2 P63 BN63B4**	123
20.2	79	2.5	65.3	5000	**C223_65.3 S05 M05B4**	126	**C223_65.3 P63 BN63B4**	127
20.9	78	1.7	63.3	5000	**C222_63.3 S05 M05B4**	126	**C222_63.3 P63 BN63B4**	127
22.0	73	2.6	60.0	5000	**C223_60.0 S05 M05B4**	126	**C223_60.0 P63 BN63B4**	127
22.2	73	2.9	59.4	5500	**C322_59.4 S05 M05B4**	130	**C322_59.4 P63 BN63B4**	131
23.9	68	1.3	55.2	2000	**C122_55.2 S05 M05B4**	122	**C122_55.2 P63 BN63B4**	123
24.1	68	2.3	54.7	5000	**C222_54.7 S05 M05B4**	126	**C222_54.7 P63 BN63B4**	127
27.1	60	2.6	48.6	5000	**C222_48.6 S05 M05B4**	126	**C222_48.6 P63 BN63B4**	127
27.7	59	1.5	47.6	2000	**C122_47.6 S05 M05B4**	122	**C122_47.6 P63 BN63B4**	123
31	53	3.6	43.3	5000	**C222_43.3 S05 M05B4**	126	**C222_43.3 P63 BN63B4**	127
31	52	1.7	42.3	2000	**C122_42.3 S05 M05B4**	122	**C122_42.3 P63 BN63B4**	123
33	50	0.9	40.3	850	**C052_40.3 S05 M05B4**	121		
36	45	1.0	36.4	850	**C052_36.4 S05 M05B4**	121		
36	46	2.0	37.0	2000	**C122_37.0 S05 M05B4**	122	**C122_37.0 P63 BN63B4**	123
40	40	2.2	32.8	2000	**C122_32.8 S05 M05B4**	122	**C122_32.8 P63 BN63B4**	123
40	41	1.1	32.8	840	**C052_32.8 S05 M05B4**	121		
45	36	2.5	29.5	2000	**C122_29.5 S05 M05B4**	122	**C122_29.5 P63 BN63B4**	123
49	34	1.3	27.1	820	**C052_27.1 S05 M05B4**	121		
52	31	2.8	25.4	2000	**C122_25.4 S05 M05B4**	122	**C122_25.4 P63 BN63B4**	123
57	29	3.0	23.2	2000	**C122_23.2 S05 M05B4**	122	**C122_23.2 P63 BN63B4**	123
63	26	1.7	21.0	810	**C052_21.0 S05 M05B4**	121		
64	25	3.2	20.6	2000	**C122_20.6 S05 M05B4**	122	**C122_20.6 P63 BN63B4**	123
70	23	1.7	18.9	790	**C052_18.9 S05 M05B4**	121		
72	23	3.4	18.4	2000	**C122_18.4 S05 M05B4**	122	**C122_18.4 P63 BN63B4**	123
77	21	3.6	17.2	2000	**C122_17.2 S05 M05B4**	122	**C122_17.2 P63 BN63B4**	123
85	19	2.1	15.6	760	**C052_15.6 S05 M05B4**	121		
106	15	2.6	12.5	740	**C052_12.5 S05 M05B4**	121		
118	14	2.9	11.2	720	**C052_11.2 S05 M05B4**	121		
142	11	2.6	9.3	690	**C052_9.3 S05 M05B4**	121		
178	9	3.3	7.4	650	**C052_7.4 S05 M05B4**	121		
197	8	3.6	6.7	640	**C052_6.7 S05 M05B4**	121		
229	7	7.4	11.9	1670	**C122_11.9 S05 M05A2**	122	**C122_11.9 P63 BN63A2**	123
240	7	4.4	5.5	600	**C052_5.5 S05 M05B4**	121		
268	6	8.1	10.1	1600	**C122_10.1 S05 M05A2**	122	**C122_10.1 P63 BN63A2**	123
310	5	8.9	8.8	1530	**C122_8.8 S05 M05A2**	122	**C122_8.8 P63 BN63A2**	123
354	5	9.8	7.6	1470	**C122_7.6 S05 M05A2**	122	**C122_7.6 P63 BN63A2**	123
440	4	11.3	6.2	1390	**C122_6.2 S05 M05A2**	122	**C122_6.2 P63 BN63A2**	123
488	3	11.9	5.6	1300	**C122_5.6 S05 M05A2**	122	**C122_5.6 P63 BN63A2**	123
577	3	13.4	4.9	1250	**C122_4.9 S05 M05A2**	122	**C122_4.9 P63 BN63A2**	123
635	3	14.0	4.3	1190	**C122_4.3 S05 M05A2**	122	**C122_4.3 P63 BN63A2**	123
770	2	16.0	3.7	1140	**C122_3.7 S05 M05A2**	122	**C122_3.7 P63 BN63A2**	123
853	2	16.7	3.2	1090	**C122_3.2 S05 M05A2**	122	**C122_3.2 P63 BN63A2**	123
1015	2	18.7	2.8	1040	**C122_2.8 S05 M05A2**	122	**C122_2.8 P63 BN63A2**	123

0.25 kW

n_2 min-1	M_2 Nm	S	i	R_{n2} N	IE1		IEC IE1	
0.61	3575	1.1	1481	35000			**C804_1481 P71 BN71B6**	154
0.77	2820	1.4	1168	35000			**C804_1168 P71 BN71B6**	154
1.2	1753	0.9	726.3	16000	**C614_726.3 S1 M1SD6**	146	**C614_726.3 P71 BN71B6**	147
1.6	1330	0.8	808.0	10000			**C514_808.0 P63 BN63C4**	143
1.6	1327	0.8	549.7	10000	**C514_549.7 S1 M1SD6**	142	**C514_549.7 P71 BN71B6**	143
1.9	1134	0.9	717.7	10000			**C514_717.7 P71 BN71A4**	143
1.9	1120	0.9	463.9	10000	**C514_463.9 S1 M1SD6**	142	**C514_463.9 P71 BN71B6**	143
2.0	1101	1.5	668.8	16000			**C614_668.8 P63 BN63C4**	147
2.4	894	1.8	370.1	16000	**C614_370.1 S1 M1SD6**	146	**C614_370.1 P71 BN71B6**	147
2.5	869	1.2	549.7	10000			**C514_549.7 P71 BN71A4**	143
2.9	741	0.8	450.2	7000	**C414_450.2 S05 M05C4**	138	**C414_450.2 P71 BN71A4**	139

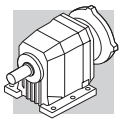

0.25 kW

n_2 min-1	M_2 Nm	S	i	R_{n2} N	IE1		IEC IE1	
3.2	689	0.9	418.5	7000	**C414_418.5 S05 M05C4**	138	**C414_418.5 P71 BN71A4**	139
3.2	684	1.5	415.7	10000			**C514_415.7 P71 BN71A4**	143
3.5	628	1.0	381.8	7000	**C414_381.8 S05 M05C4**	138	**C414_381.8 P71 BN71A4**	139
3.5	625	1.6	379.6	10000			**C514_379.6 P71 BN71A4**	143
3.8	567	0.8	344.3	6500	**C364_344.3 S05 M05C4**	134	**C364_344.3 P71 BN71A4**	139
4.0	549	1.1	333.4	7000	**C414_333.4 S05 M05C4**	138	**C414_333.4 P71 BN71A4**	139
4.0	537	1.9	326.1	10000			**C514_326.1 P71 BN71A4**	143
4.2	511	0.9	318.9	6500	**C364_318.9 S05 M05C4**	134	**C364_318.9 P71 BN71A4**	139
4.3	501	1.2	304.2	7000	**C414_304.2 S05 M05C4**	138	**C414_304.2 P71 BN71A4**	139
4.4	490	2.0	297.8	10000			**C514_297.8 P71 BN71A4**	143
4.6	466	1.0	290.9	6500	**C364_290.9 S05 M05C4**	134	**C364_290.9 P71 BN71A4**	139
5.0	434	2.3	263.8	10000			**C514_263.8 P71 BN71A4**	143
5.0	433	1.4	263.0	7000	**C414_263.0 S05 M05C4**	138	**C414_263.0 P71 BN71A4**	139
5.3	409	1.1	255.0	6500	**C364_255.0 S05 M05C4**	134	**C364_255.0 P71 BN71A4**	139
5.5	395	1.5	239.9	7000	**C414_239.9 S05 M05C4**	138	**C414_239.9 P71 BN71A4**	139
5.8	370	1.2	230.9	6500	**C364_230.9 S05 M05C4**	134	**C364_230.9 P71 BN71A4**	139
6.3	350	2.9	216.7	10000			**C513_216.7 P71 BN71A4**	143
6.5	342	1.3	206.4	6500	**C363_206.4 S05 M05C4**	134	**C363_206.4 P71 BN71A4**	135
7.2	308	1.9	190.8	7000			**C413_190.8 P71 BN71A4**	139
7.2	308	1.0	186.0	5500	**C323_186.0 S05 M05C4**	130	**C323_186.0 P71 BN71A4**	131
7.3	304	1.5	183.5	6500	**C363_183.5 S05 M05C4**	134	**C363_183.5 P71 BN71A4**	135
8.0	277	1.1	167.4	5500	**C323_167.4 S05 M05C4**	130	**C323_167.4 P71 BN71A4**	131
8.3	268	1.7	162.0	6500	**C363_162.0 S05 M05C4**	134	**C363_162.0 P71 BN71A4**	135
8.4	265	2.3	164.1	7000			**C413_164.1 P71 BN71A4**	139
9.0	246	1.2	148.4	5500	**C323_148.4 S05 M05C4**	130	**C323_148.4 P71 BN71A4**	131
9.6	231	1.9	139.8	6500	**C363_139.8 S05 M05C4**	134	**C363_139.8 P71 BN71A4**	135
9.8	226	0.9	136.5	5000	**C223_136.5 S05 M05C4**	126	**C223_136.5 P71 BN71A4**	127
9.9	225	1.3	136.0	5500	**C323_136.0 S05 M05C4**	130	**C323_136.0 P71 BN71A4**	131
10.3	215	2.8	132.9	7000			**C413_132.9 P71 BN71A4**	139
10.7	208	2.2	125.8	6500	**C363_125.8 S05 M05C4**	134	**C363_125.8 P71 BN71A4**	135
11.0	203	1.5	122.4	5500	**C323_122.4 S05 M05C4**	130	**C323_122.4 P71 BN71A4**	131
11.0	202	1.0	122.2	5000	**C223_122.2 S05 M05C4**	126	**C223_122.2 P71 BN71A4**	127
12.0	185	1.1	112.0	5000	**C223_112.0 S05 M05C4**	126	**C223_112.0 P71 BN71A4**	127
12.0	185	2.4	111.5	6500	**C363_111.5 S05 M05C4**	134	**C363_111.5 P71 BN71A4**	135
12.1	183	1.6	110.6	5500	**C323_110.6 S05 M05C4**	130	**C323_110.6 P71 BN71A4**	131
13.0	171	1.8	103.3	5500	**C323_103.3 S05 M05C4**	130	**C323_103.3 P71 BN71A4**	131
13.1	169	2.7	102.2	6500	**C363_102.2 S05 M05C4**	134	**C363_102.2 P71 BN71A4**	135
13.4	166	1.2	100.2	5000	**C223_100.2 S05 M05C4**	126	**C223_100.2 P71 BN71A4**	127
14.2	156	1.9	94.2	5500	**C323_94.2 S05 M05C4**	130	**C323_94.2 P71 BN71A4**	131
14.6	152	3.0	91.9	6500	**C363_91.9 S05 M05C4**	134	**C363_91.9 P71 BN71A4**	135
15.1	147	1.4	88.5	5000	**C223_88.5 S05 M05C4**	126	**C223_88.5 P71 BN71A4**	127
16.2	137	1.5	82.6	5000	**C223_82.6 S05 M05C4**	126	**C223_82.6 P71 BN71A4**	127
16.2	137	2.2	82.6	5500	**C323_82.6 S05 M05C4**	130	**C323_82.6 P71 BN71A4**	131
17.9	124	1.6	74.8	5000	**C223_74.8 S05 M05C4**	126	**C223_74.8 P71 BN71A4**	127
17.9	124	2.3	74.7	5500	**C323_74.7 S05 M05C4**	130	**C323_74.7 P71 BN71A4**	131
20.1	113	1.9	66.8	5500	**C322_66.8 S05 M05C4**	130	**C322_66.8 P71 BN71A4**	131
20.3	112	0.8	66.2	2000	**C122_66.2 S05 M05C4**	122	**C122_66.2 P71 BN71A4**	123
20.5	108	1.8	65.3	5000	**C223_65.3 S05 M05C4**	126	**C223_65.3 P71 BN71A4**	127
21.2	107	1.2	63.3	5000	**C222_63.3 S05 M05C4**	126	**C222_63.3 P71 BN71A4**	127
22.3	99	1.9	60.0	5000	**C223_60.0 S05 M05C4**	126	**C223_60.0 P71 BN71A4**	127
22.6	100	2.1	59.4	5500	**C322_59.4 S05 M05C4**	130	**C322_59.4 P71 BN71A4**	131
24.3	93	1.0	55.2	2000	**C122_55.2 S05 M05C4**	122	**C122_55.2 P71 BN71A4**	123
24.5	93	1.7	54.7	5000	**C222_54.7 S05 M05C4**	126	**C222_54.7 P71 BN71A4**	127
25.6	89	3.4	52.4	5500	**C322_52.4 S05 M05C4**	130	**C322_52.4 P71 BN71A4**	131
27.5	82	1.9	48.6	5000	**C222_48.6 S05 M05C4**	126	**C222_48.6 P71 BN71A4**	127
28.1	80	1.1	47.6	2000	**C122_47.6 S05 M05C4**	122	**C122_47.6 P71 BN71A4**	123
31	73	2.6	43.3	4750	**C222_43.3 S05 M05C4**	126	**C222_43.3 P71 BN71A4**	127
32	72	1.3	42.3	2000	**C122_42.3 S05 M05C4**	122	**C122_42.3 P71 BN71A4**	123
36	63	1.4	37.0	2000	**C122_37.0 S05 M05C4**	122	**C122_37.0 P71 BN71A4**	123
36	62	3.2	36.8	4540	**C222_36.8 S05 M05C4**	126	**C222_36.8 P71 BN71A4**	127
40	56	3.6	33.1	4500	**C222_33.1 S05 M05C4**	126	**C222_33.1 P71 BN71A4**	127
41	55	1.6	32.8	2000	**C122_32.8 S05 M05C4**	122	**C122_32.8 P71 BN71A4**	123
45	50	1.8	29.5	2000	**C122_29.5 S05 M05C4**	122	**C122_29.5 P71 BN71A4**	123
49	47	1.0	27.1	700	**C052_27.1 S05 M05C4**	121		
53	43	2.1	25.4	2000	**C122_25.4 S05 M05C4**	122	**C122_25.4 P71 BN71A4**	123

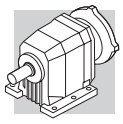

0.25 kW

n_2 min^{-1}	M_2 Nm	S	i	R_{n2} N	IE1		IEC IE1	
58	39	2.2	23.2	2000	**C122_23.2 S05 M05C4**	122	**C122_23.2 P71 BN71A4**	123
63	36	1.2	21.0	720	**C052_21.0 S05 M05C4**	121		
65	35	2.4	20.6	2000	**C122_20.6 S05 M05C4**	122	**C122_20.6 P71 BN71A4**	123
70	33	1.2	18.9	710	**C052_18.9 S05 M05C4**	121		
73	31	2.5	18.4	2000	**C122_18.4 S05 M05C4**	122	**C122_18.4 P71 BN71A4**	123
78	29	2.6	17.2	2000	**C122_17.2 S05 M05C4**	122	**C122_17.2 P71 BN71A4**	123
85	27	1.5	15.6	700	**C052_15.6 S05 M05C4**	121		
87	26	2.8	15.4	2000	**C122_15.4 S05 M05C4**	122	**C122_15.4 P71 BN71A4**	123
100	23	3.1	13.4	2000	**C122_13.4 S05 M05C4**	122	**C122_13.4 P71 BN71A4**	123
106	22	1.9	12.5	690	**C052_12.5 S05 M05C4**	121		
113	20	3.3	11.9	2000	**C122_11.9 S05 M05C4**	122	**C122_11.9 P71 BN71A4**	123
118	19	2.1	11.2	670	**C052_11.2 S05 M05C4**	121		
133	17	3.7	10.1	1980	**C122_10.1 S05 M05C4**	122	**C122_10.1 P71 BN71A4**	123
142	16	1.9	9.3	650	**C052_9.3 S05 M05C4**	121		
157	14	4.2	17.2	1870	**C122_17.2 S05 M05B2**	122	**C122_17.2 P63 BN63B2**	123
178	13	2.4	7.4	620	**C052_7.4 S05 M05C4**	121		
197	12	2.6	6.7	610	**C052_6.7 S05 M05C4**	121		
204	11	5.0	13.4	1710	**C122_13.4 S05 M05B2**	122	**C122_13.4 P63 BN63B2**	123
230	10	5.4	11.9	1660	**C122_11.9 S05 M05B2**	122	**C122_11.9 P63 BN63B2**	123
240	9	3.2	5.5	580	**C052_5.5 S05 M05C4**	121		
268	8	5.8	10.1	1590	**C122_10.1 S05 M05B2**	122	**C122_10.1 P63 BN63B2**	123
311	7	6.5	8.8	1510	**C122_8.8 S05 M05B2**	122	**C122_8.8 P63 BN63B2**	123
354	6	7.0	7.6	1460	**C122_7.6 S05 M05B2**	122	**C122_7.6 P63 BN63B2**	123
442	5	8.2	6.2	1350	**C122_6.2 S05 M05B2**	122	**C122_6.2 P63 BN63B2**	123
489	5	8.6	5.6	1290	**C122_5.6 S05 M05B2**	122	**C122_5.6 P63 BN63B2**	123
577	4	9.7	4.9	1240	**C122_4.9 S05 M05B2**	122	**C122_4.9 P63 BN63B2**	123
637	4	10.1	4.3	1180	**C122_4.3 S05 M05B2**	122	**C122_4.3 P63 BN63B2**	123
770	3	11.5	3.7	1130	**C122_3.7 S05 M05B2**	122	**C122_3.7 P63 BN63B2**	123
856	3	12.1	3.2	1080	**C122_3.2 S05 M05B2**	122	**C122_3.2 P63 BN63B2**	123
979	2	13.0	2.8	1030	**C122_2.8 S05 M05B2**	122	**C122_2.8 P63 BN63B2**	123

0.37 kW

n_2 min^{-1}	M_2 Nm	S	i	R_{n2} N	IE1		IEC IE1	
0.73	4382	1.6	1240	60000	**C904_1240 S1 M1LA6**	156	**C904_1240 P80 BN80A6**	157
0.78	4127	1.0	1168	35000			**C804_1168 P80 BN80A6**	154
0.93	3476	1.2	1481	35000			**C804_1481 P71 BN71B4**	154
1.2	2741	1.5	1168	35000			**C804_1168 P71 BN71B4**	154
1.4	2220	1.8	945.7	35000			**C804_945.7 P71 BN71B4**	154
1.5	2165	1.1	922.6	25000			**C704_922.6 P71 BN71B4**	151
1.7	1869	0.9	796.1	16000	**C614_796.1 S1 M1SD4**	146	**C614_796.1 P71 BN71B4**	147
2.0	1570	1.0	668.8	16000	**C614_668.8 S1 M1SD4**	146	**C614_668.8 P71 BN71B4**	147
2.1	1543	1.5	657.3	25000			**C704_657.3 P71 BN71B4**	151
2.4	1341	1.2	571.2	16000	**C614_571.2 S1 M1SD4**	146	**C614_571.2 P71 BN71B4**	147
2.5	1302	1.8	554.7	25000			**C704_554.7 P71 BN71B4**	151
2.5	1290	0.8	549.7	10000	**C514_549.7 S1 M1SD4**	142	**C514_549.7 P71 BN71B4**	143
2.6	1223	1.3	521.1	16000	**C614_521.1 S1 M1SD4**	146	**C614_521.1 P71 BN71B4**	147
3.3	989	1.6	421.5	16000	**C614_421.5 S1 M1SD4**	146	**C614_421.5 P71 BN71B4**	147
3.3	976	1.0	415.7	10000	**C514_415.7 S1 M1SD4**	142	**C514_415.7 P71 BN71B4**	143
3.3	961	2.4	409.4	25000			**C704_409.4 P71 BN71B4**	151
3.6	891	1.1	379.6	10000	**C514_379.6 S1 M1SD4**	142	**C514_379.6 P71 BN71B4**	143
3.7	869	1.8	370.1	16000	**C614_370.1 S1 M1SD4**	146	**C614_370.1 P71 BN71B4**	147
4.1	793	2.0	337.7	16000	**C614_337.7 S1 M1SD4**	146	**C614_337.7 P71 BN71B4**	147
4.1	783	0.8	333.4	7000	**C414_333.4 S1 M1SD4**	138	**C414_333.4 P71 BN71B4**	139
4.2	765	1.3	326.1	10000	**C514_326.1 S1 M1SD4**	142	**C514_326.1 P71 BN71B4**	143
4.6	699	1.4	297.8	10000	**C514_297.8 S1 M1SD4**	142	**C514_297.8 P71 BN71B4**	143
5.2	619	1.6	263.8	10000	**C514_263.8 S1 M1SD4**	142	**C514_263.8 P71 BN71B4**	143
5.2	617	1.0	263.0	7000	**C414_263.0 S1 M1SD4**	138	**C414_263.0 P71 BN71B4**	139
5.9	540	0.8	230.9	6300	**C364_230.9 S1 M1SD4**	134	**C364_230.9 P71 BN71B4**	139
6.3	520	1.9	216.7	10000	**C513_216.7 S1 M1SD4**	142	**C513_216.7 P71 BN71B4**	143

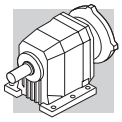

0.37 kW

n_2 min^{-1}	M_2 Nm	S	i	R_{n2} N	IE1		IEC IE1	
6.6	502	1.2	209.1	7000	**C413_209.1 S1 M1SD4**	138	**C413_209.1 P71 BN71B4**	139
6.6	499	0.9	206.4	6500			**C363_206.4 P71 BN71B4**	135
6.9	475	2.1	197.9	10000	**C513_197.9 S1 M1SD4**	142	**C513_197.9 P71 BN71B4**	143
7.2	458	1.3	190.8	7000	**C413_190.8 S1 M1SD4**	138	**C413_190.8 P71 BN71B4**	139
7.5	444	1.0	183.5	6500			**C363_183.5 P71 BN71B4**	135
7.6	431	1.4	179.9	7000	**C413_179.9 S1 M1SD4**	138	**C413_179.9 P71 BN71B4**	139
7.8	422	2.4	175.8	10000	**C513_175.8 S1 M1SD4**	142	**C513_175.8 P71 BN71B4**	143
8.3	394	1.5	164.1	7000	**C413_164.1 S1 M1SD4**	138	**C413_164.1 P71 BN71B4**	139
8.5	385	2.6	160.5	10000	**C513_160.5 S1 M1SD4**	142	**C513_160.5 P71 BN71B4**	143
8.5	392	1.1	162.0	6500	**C363_162.0 S1 M1SD4**	134	**C363_162.0 P71 BN71B4**	135
9.4	349	1.7	145.6	7000	**C413_145.6 S1 M1SD4**	138	**C413_145.6 P71 BN71B4**	139
9.8	338	1.3	139.8	6500	**C363_139.8 S1 M1SD4**	134	**C363_139.8 P71 BN71B4**	135
10.1	329	0.9	136.0	5500	**C323_136.0 S1 M1SD4**	130	**C323_136.0 P71 BN71B4**	131
10.3	319	1.9	132.9	7000	**C413_132.9 S1 M1SD4**	138	**C413_132.9 P71 BN71B4**	139
10.9	304	1.5	125.8	6500	**C363_125.8 S1 M1SD4**	134	**C363_125.8 P71 BN71B4**	135
11.2	296	1.0	122.4	5500	**C323_122.4 S1 M1SD4**	130	**C323_122.4 P71 BN71B4**	131
11.4	289	2.1	120.6	7000	**C413_120.6 S1 M1SD4**	138	**C413_120.6 P71 BN71B4**	139
12.3	270	1.7	111.5	6500	**C363_111.5 S1 M1SD4**	134	**C363_111.5 P71 BN71B4**	135
12.4	264	2.3	110.1	7000	**C413_110.1 S1 M1SD4**	138	**C413_110.1 P71 BN71B4**	139
12.4	267	1.1	110.6	5500	**C323_110.6 S1 M1SD4**	130	**C323_110.6 P71 BN71B4**	131
13.3	250	1.2	103.3	5500	**C323_103.3 S1 M1SD4**	130	**C323_103.3 P71 BN71B4**	131
13.4	245	2.4	102.3	7000	**C413_102.3 S1 M1SD4**	138	**C413_102.3 P71 BN71B4**	139
13.4	247	1.8	102.2	6500	**C363_102.2 S1 M1SD4**	134	**C363_102.2 P71 BN71B4**	135
14.5	228	1.3	94.2	5500	**C323_94.2 S1 M1SD4**	130	**C323_94.2 P71 BN71B4**	131
14.7	224	2.7	93.3	7000	**C413_93.3 S1 M1SD4**	138	**C413_93.3 P71 BN71B4**	139
14.9	222	2.0	91.9	6500	**C363_91.9 S1 M1SD4**	134	**C363_91.9 P71 BN71B4**	135
15.5	214	0.9	88.5	4850	**C223_88.5 S1 M1SD4**	126	**C223_88.5 P71 BN71B4**	127
16.5	201	2.2	83.1	6500	**C363_83.1 S1 M1SD4**	134	**C363_83.1 P71 BN71B4**	135
16.6	200	1.0	82.6	5000	**C223_82.6 S1 M1SD4**	126	**C223_82.6 P71 BN71B4**	127
16.6	200	1.5	82.6	5500	**C323_82.6 S1 M1SD4**	130	**C323_82.6 P71 BN71B4**	131
16.8	196	3.1	81.5	7000	**C413_81.5 S1 M1SD4**	138	**C413_81.5 P71 BN71B4**	139
17.7	188	2.4	77.6	6500	**C363_77.6 S1 M1SD4**	134	**C363_77.6 P71 BN71B4**	135
18.3	181	1.1	74.8	5000	**C223_74.8 S1 M1SD4**	126	**C223_74.8 P71 BN71B4**	127
18.3	181	1.6	74.7	5500	**C323_74.7 S1 M1SD4**	130	**C323_74.7 P71 BN71B4**	131
18.4	178	3.4	74.4	7000	**C413_74.4 S1 M1SD4**	138	**C413_74.4 P71 BN71B4**	139
19.4	171	2.6	70.8	6500	**C363_70.8 S1 M1SD4**	134	**C363_70.8 P71 BN71B4**	135
20.5	165	1.3	66.8	5500			**C322_66.8 P71 BN71B4**	131
21.0	158	1.3	65.3	5000	**C223_65.3 S1 M1SD4**	126	**C223_65.3 P71 BN71B4**	127
21.7	156	0.8	63.3	4850			**C222_63.3 P71 BN71B4**	127
22.1	150	3.0	62.0	6500	**C363_62.0 S1 M1SD4**	134	**C363_62.0 P71 BN71B4**	135
22.8	145	1.3	60.0	5000	**C223_60.0 S1 M1SD4**	126	**C223_60.0 P71 BN71B4**	127
23.1	147	1.5	59.4	5500	**C322_59.4 S1 M1SD4**	130	**C322_59.4 P71 BN71B4**	131
25.0	135	1.1	54.7	5000			**C222_54.7 P71 BN71B4**	127
26.1	130	2.3	52.4	5500	**C322_52.4 S1 M1SD4**	130	**C322_52.4 P71 BN71B4**	131
28.2	120	1.3	48.6	4850			**C222_48.6 P71 BN71B4**	127
30	112	2.7	45.3	5500	**C322_45.3 S1 M1SD4**	130	**C322_45.3 P71 BN71B4**	131
32	107	1.8	43.3	4530	**C222_43.3 S1 M1SD4**	126	**C222_43.3 P71 BN71B4**	127
34	101	3.0	40.7	5500	**C322_40.7 S1 M1SD4**	130	**C322_40.7 P71 BN71B4**	131
37	91	1.0	37.0	2000	**C122_37.0 S1 M1SD4**	122	**C122_37.0 P71 BN71B4**	123
37	91	2.2	36.8	4360	**C222_36.8 S1 M1SD4**	126	**C222_36.8 P71 BN71B4**	127
38	89	3.4	36.1	5500	**C322_36.1 S1 M1SD4**	130	**C322_36.1 P71 BN71B4**	131
41	82	2.4	33.1	4240	**C222_33.1 S1 M1SD4**	126	**C222_33.1 P71 BN71B4**	127
42	81	1.1	32.8	2000	**C122_32.8 S1 M1SD4**	122	**C122_32.8 P71 BN71B4**	123
46	73	2.7	29.6	4130	**C222_29.6 S1 M1SD4**	126	**C222_29.6 P71 BN71B4**	127
46	73	1.2	29.5	2000	**C122_29.5 S1 M1SD4**	122	**C122_29.5 P71 BN71B4**	123
50	67	3.0	27.2	4100	**C222_27.2 S1 M1SD4**	126	**C222_27.2 P71 BN71B4**	127
54	63	1.4	25.4	2000	**C122_25.4 S1 M1SD4**	122	**C122_25.4 P71 BN71B4**	123
56	60	3.3	24.3	3920	**C222_24.3 S1 M1SD4**	126	**C222_24.3 P71 BN71B4**	127
59	57	1.5	23.2	2000	**C122_23.2 S1 M1SD4**	122	**C122_23.2 P71 BN71B4**	123
66	51	1.6	20.6	2000	**C122_20.6 S1 M1SD4**	122	**C122_20.6 P71 BN71B4**	123
74	45	1.7	18.4	2000	**C122_18.4 S1 M1SD4**	122	**C122_18.4 P71 BN71B4**	123
80	42	1.8	17.2	2000	**C122_17.2 S1 M1SD4**	122	**C122_17.2 P71 BN71B4**	123
88	39	1.0	15.6	580	**C052_15.6 S1 M1SD4**	121		
89	38	1.9	15.4	2000	**C122_15.4 S1 M1SD4**	122	**C122_15.4 P71 BN71B4**	123
102	33	2.1	13.4	2000	**C122_13.4 S1 M1SD4**	122	**C122_13.4 P71 BN71B4**	123

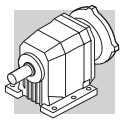

0.37 kW

n_2 min-1	M_2 Nm	S	i	R_{n2} N	IE1		IEC IE1	
110	31	1.3	12.5	600	**C052_12.5 S1 M1SD4**	121		
115	29	2.3	11.9	2000	**C122_11.9 S1 M1SD4**	122	**C122_11.9 P71 BN71B4**	123
122	28	1.4	11.2	590	**C052_11.2 S1 M1SD4**	121		
136	25	2.5	10.1	1930	**C122_10.1 S1 M1SD4**	122	**C122_10.1 P71 BN71B4**	123
147	23	1.3	9.3	580	**C052_9.3 S1 M1SD4**	121		
155	22	2.7	8.8	1850	**C122_8.8 S1 M1SD4**	122	**C122_8.8 P71 BN71B4**	123
164	20	2.2	5.5	570	**C052_5.5 S1 M1LA6**	121		
180	19	3.0	7.6	1780	**C122_7.6 S1 M1SD4**	122	**C122_7.6 P71 BN71B4**	123
185	18	1.6	7.4	570	**C052_7.4 S1 M1SD4**	121		
204	17	1.8	6.7	560	**C052_6.7 S1 M1SD4**	121		
220	15	3.4	6.2	1650	**C122_6.2 S1 M1SD4**	122	**C122_6.2 P71 BN71B4**	123
235	14	3.7	11.9	1610	**C122_11.9 S05 M05C2**	122	**C122_11.9 P71 BN71A2**	123
249	14	2.2	5.5	540	**C052_5.5 S1 M1SD4**	121		
273	12	4.0	10.1	1570	**C122_10.1 S05 M05C2**	122	**C122_10.1 P71 BN71A2**	123
318	11	4.5	8.8	1500	**C122_8.8 S05 M05C2**	122	**C122_8.8 P71 BN71A2**	123
361	9	4.8	7.6	1440	**C122_7.6 S05 M05C2**	122	**C122_7.6 P71 BN71A2**	123
452	7	5.7	6.2	1350	**C122_6.2 S05 M05C2**	122	**C122_6.2 P71 BN71A2**	123
500	7	6.0	5.6	1290	**C122_5.6 S05 M05C2**	122	**C122_5.6 P71 BN71A2**	123
577	6	6.5	4.9	1230	**C122_4.9 S05 M05C2**	122	**C122_4.9 P71 BN71A2**	123
651	5	7.0	4.3	1180	**C122_3.2 S05 M05C2**	122	**C122_3.2 P71 BN71A2**	123
770	4	7.8	3.7	1120	**C122_3.7 S05 M05C2**	122	**C122_3.7 P71 BN71A2**	123
875	4	8.4	3.2	1080	**C122_3.2 S05 M05C2**	122	**C122_3.2 P71 BN71A2**	123
1015	3	9.1	2.8	1030	**C122_2.8 S05 M05C2**	122	**C122_2.8 P71 BN71A2**	123

0.55 kW

n_2 min-1	M_2 Nm	S	i	R_{n2} N	IE1		IEC IE1	
0.74	6442	1.1	1240	60000	**C904_1240 S2 M2SA6**	156	**C904_1240 P80 BN80B6**	157
0.85	5616	2.1	1081	85000	**C1004_1081 S2 M2SA6**	159	**C1004_1081 P80 BN80B6**	160
1.0	4792	1.5	922.3	60000	**C904_922.3 S2 M2SA6**	156	**C904_922.3 P80 BN80B6**	157
1.1	4381	0.9	1274	35000	**C804_1274 S1 M1LA4**	153	**C804_1274 P80 BN80A4**	154
1.1	4295	1.7	1240	60000	**C904_1240 S1 M1LA4**	156	**C904_1240 P80 BN80A4**	157
1.3	3549	1.1	1032	35000	**C804_1032 S1 M1LA4**	153	**C804_1032 P80 BN80A4**	154
1.4	3484	2.1	1006	60000	**C904_1006 S1 M1LA4**	156	**C904_1006 P80 BN80A4**	157
1.6	2939	1.4	854.6	35000	**C804_854.6 S1 M1LA4**	153	**C804_854.6 P80 BN80A4**	154
1.6	2923	2.5	844.0	65000	**C904_844.0 S1 M1LA4**	156	**C904_844.0 P80 BN80A4**	157
1.9	2531	0.9	736.0	25000	**C704_736.0 S1 M1LA4**	150	**C704_736.0 P80 BN80A4**	151
1.9	2492	1.6	724.7	35000	**C804_724.7 S1 M1LA4**	153	**C804_724.7 P80 BN80A4**	154
2.1	2284	1.8	664.3	35000	**C804_664.3 S1 M1LA4**	153	**C804_664.3 P80 BN80A4**	154
2.1	2260	1.0	657.3	25000	**C704_657.3 S1 M1LA4**	150	**C704_657.3 P80 BN80A4**	151
2.4	1978	0.8	571.2	16000	**C614_571.2 S1 M1LA4**	146	**C614_571.2 P80 BN80A4**	147
2.5	1907	1.2	554.7	25000	**C704_554.7 S1 M1LA4**	150	**C704_554.7 P80 BN80A4**	151
2.6	1820	2.2	529.3	35000	**C804_529.3 S1 M1LA4**	153	**C804_529.3 P80 BN80A4**	154
3.0	1600	1.0	462.0	16000	**C614_462.0 S1 M1LA4**	146	**C614_462.0 P80 BN80A4**	147
3.1	1566	2.6	455.4	35000	**C804_455.4 S1 M1LA4**	153	**C804_455.4 P80 BN80A4**	154
3.1	1525	1.5	443.5	25000	**C704_443.5 S1 M1LA4**	150	**C704_443.5 P80 BN80A4**	151
3.3	1460	1.1	421.5	16000	**C614_421.5 S1 M1LA4**	146	**C614_421.5 P80 BN80A4**	147
3.6	1315	0.8	379.6	10000	**C514_379.6 S1 M1LA4**	142	**C514_379.6 P80 BN80A4**	143
3.7	1282	1.2	370.1	16000	**C614_370.1 S1 M1LA4**	146	**C614_370.1 P80 BN80A4**	147
3.8	1254	3.2	364.7	35000	**C804_364.7 S1 M1LA4**	153	**C804_364.7 P80 BN80A4**	154
4.0	1184	1.9	344.3	25000	**C704_344.3 S1 M1LA4**	150	**C704_344.3 P80 BN80A4**	151
4.1	1170	1.4	337.7	16000	**C614_337.7 S1 M1LA4**	146	**C614_337.7 P80 BN80A4**	147
4.2	1130	0.9	326.1	10000	**C514_326.1 S1 M1LA4**	142	**C514_326.1 P80 BN80A4**	143
4.6	1031	1.0	297.8	10000	**C514_297.8 S1 M1LA4**	142	**C514_297.8 P80 BN80A4**	143
5.0	953	1.7	275.3	16000	**C614_275.3 S1 M1LA4**	146	**C614_275.3 P80 BN80A4**	147
5.1	936	2.5	272.2	25000	**C704_272.2 S1 M1LA4**	150	**C704_272.2 P80 BN80A4**	151
5.2	914	1.1	263.8	10000	**C514_263.8 S1 M1LA4**	142	**C514_263.8 P80 BN80A4**	143
5.7	834	1.2	240.9	10000	**C514_240.9 S1 M1LA4**	142	**C514_240.9 P80 BN80A4**	143
5.8	847	2.7	239.3	25000			**C703_239.3 P80 BN80A4**	151
5.8	825	1.9	238.3	16000	**C614_238.3 S1 M1LA4**	146	**C614_238.3 P80 BN80A4**	147

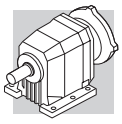

0.55 kW

n_2 min-1	M_2 Nm	S	i	R_{n2} N	IE1		IEC IE1	
6.2	782	2.9	220.9	25000			**C703_220.9 P80 BN80A4**	151
6.3	753	2.1	217.4	16000	**C614_217.4 S1 M1LA4**	146	**C614_217.4 P80 BN80A4**	147
6.4	767	1.3	216.7	10000	**C513_216.7 S1 M1LA4**	142	**C513_216.7 P80 BN80A4**	143
7.0	700	1.4	197.9	10000	**C513_197.9 S1 M1LA4**	142	**C513_197.9 P80 BN80A4**	143
7.0	693	2.3	195.8	16000			**C613_195.8 P80 BN80A4**	146
7.1	687	3.3	194.1	25000			**C703_194.1 P80 BN80A4**	151
7.7	637	0.9	179.9	7000	**C413_179.9 S1 M1LA4**	138	**C413_179.9 P80 BN80A4**	139
7.7	632	2.5	178.6	16000			**C613_178.6 P80 BN80A4**	146
7.9	622	1.6	175.8	10000	**C513_175.8 S1 M1LA4**	142	**C513_175.8 P80 BN80A4**	143
8.4	582	2.7	164.5	16000			**C613_164.5 P80 BN80A4**	146
8.4	581	1.0	164.1	7000	**C413_164.1 S1 M1LA4**	138	**C413_164.1 P80 BN80A4**	139
8.6	568	1.8	160.5	10000	**C513_160.5 S1 M1LA4**	142	**C513_160.5 P80 BN80A4**	143
9.2	531	3.0	150.0	16000			**C613_150.0 P80 BN80A4**	146
9.4	522	1.9	147.4	10000	**C513_147.4 S1 M1LA4**	142	**C513_147.4 P80 BN80A4**	143
9.5	516	1.2	145.6	7000	**C413_145.6 S1 M1LA4**	138	**C413_145.6 P80 BN80A4**	139
9.8	497	3.2	140.5	16000			**C613_140.5 P80 BN80A4**	146
9.9	494	0.9	139.8	6500	**C363_139.8 S1 M1LA4**	134	**C363_139.8 P80BN80A4**	135
10.3	477	2.1	134.6	10000	**C513_134.6 S1 M1LA4**	142	**C513_134.6 P80 BN80A4**	143
10.4	470	1.3	132.9	7000	**C413_132.9 S1 M1LA4**	138	**C413_132.9 P80 BN80A4**	139
11.0	445	1.0	125.8	6500	**C363_125.8 S1 M1LA4**	134	**C363_125.8 P80BN80A4**	135
11.1	440	2.3	124.4	10000	**C513_124.4 S1 M1LA4**	142	**C513_124.4 P80 BN80A4**	143
11.4	427	1.4	120.6	7000	**C413_120.6 S1 M1LA4**	138	**C413_120.6 P80 BN80A4**	139
12.1	402	2.5	113.6	10000	**C513_113.6 S1 M1LA4**	142	**C513_113.6 P80 BN80A4**	143
12.4	394	1.1	111.5	6500	**C363_111.5 S1 M1LA4**	134	**C363_111.5 P80BN80A4**	135
12.5	390	1.5	110.1	7000	**C413_110.1 S1 M1LA4**	138	**C413_110.1 P80 BN80A4**	139
13.5	362	1.7	102.3	7000	**C413_102.3 S1 M1LA4**	138	**C413_102.3 P80 BN80A4**	139
13.5	361	1.2	102.2	6500	**C363_102.2 S1 M1LA4**	134	**C363_102.2 P80BN80A4**	135
13.6	360	2.8	101.8	10000	**C513_101.8 S1 M1LA4**	142	**C513_101.8 P80 BN80A4**	143
14.7	333	0.9	94.2	5500	**C323_94.2 S1 M1LA4**	130	**C323_94.2 P80BN80A4**	131
14.8	330	1.8	93.3	7000	**C413_93.3 S1 M1LA4**	138	**C413_93.3 P80 BN80A4**	139
14.8	329	3.0	93.0	10000	**C513_93.0 S1 M1LA4**	142	**C513_93.0 P80 BN80A4**	143
15.0	325	1.4	91.9	6500	**C363_91.9 S1 M1LA4**	134	**C363_91.9 P80BN80A4**	135
16.6	294	1.5	83.1	6500	**C363_83.1 S1 M1LA4**	134	**C363_83.1 P80BN80A4**	135
16.7	292	1.0	82.6	5500	**C323_82.6 S1 M1LA4**	130	**C323_82.6 P80BN80A4**	131
16.9	289	2.1	81.5	7000	**C413_81.5 S1 M1LA4**	138	**C413_81.5 P80 BN80A4**	139
17.5	284	1.1	52.4	5500	**C322_52.4 S2 M2SA6**	130	**C322_52.4 P80 BN80B6**	131
17.8	274	1.6	77.6	6500	**C363_77.6 S1 M1LA4**	134	**C363_77.6 P80BN80A4**	135
18.5	264	1.1	74.7	5500	**C323_74.7 S1 M1LA4**	130	**C323_74.7 P80BN80A4**	131
18.6	263	2.3	74.4	7000	**C413_74.4 S1 M1LA4**	138	**C413_74.4 P80 BN80A4**	139
19.5	250	1.8	70.8	6500	**C363_70.8 S1 M1LA4**	134	**C363_70.8 P80BN80A4**	135
20.7	241	0.9	66.8	5500			**C322_66.8 P80BN80A4**	131
21.5	228	2.6	64.3	7000	**C413_64.3 S1 M1LA4**	138	**C413_64.3 P80 BN80A4**	139
22.2	219	2.1	62.0	6500	**C363_62.0 S1 M1LA4**	134	**C363_62.0 P80BN80A4**	135
22.6	221	1.4	40.7	5500	**C322_40.7 S2 M2SA6**	130	**C322_40.7 P80 BN80B6**	131
23.0	212	0.9	60.0	4280	**C223_60.0 S1 M1LA4**	126	**C223_60.0 P80BN80A4**	127
23.2	214	1.0	59.4	5500	**C322_59.4 S1 M1LA4**	130	**C322_59.4 P80BN80A4**	131
23.5	208	2.9	58.7	7000	**C413_58.7 S1 M1LA4**	138	**C413_58.7 P80 BN80A4**	139
24.6	198	2.3	56.2	6500	**C363_56.2 S1 M1LA4**	134	**C363_56.2 P80BN80A4**	135
26.3	189	1.6	52.4	5500	**C322_52.4 S1 M1LA4**	130	**C322_52.4 P80BN80A4**	131
26.8	182	3.3	51.5	7000	**C413_51.5 S1 M1LA4**	138	**C413_51.5 P80 BN80A4**	139
27.8	180	1.1	33.1	4270	**C222_33.1 S2 M2SA6**	126	**C222_33.1 P80 BN80B6**	127
28.7	170	2.6	48.2	6500	**C363_48.2 S1 M1LA4**	134	**C363_48.2 P80BN80A4**	135
30	163	1.8	45.3	5500	**C322_45.3 S1 M1LA4**	130	**C322_45.3 P80BN80A4**	131
31	162	3.1	44.8	7000	**C412_44.8 S1 M1LA4**	138	**C412_44.8 P80 BN80A4**	139
32	154	2.9	43.5	6500	**C363_43.5 S1 M1LA4**	134	**C363_43.5 P80BN80A4**	135
32	156	1.2	43.3	4190	**C222_43.3 S1 M1LA4**	126	**C222_43.3 P80BN80A4**	127
34	147	2.0	40.7	5500	**C322_40.7 S1 M1LA4**	130	**C322_40.7 P80BN80A4**	131
36	135	3.3	38.1	6500	**C363_38.1 S1 M1LA4**	134	**C363_38.1 P80BN80A4**	135
38	133	1.5	36.8	4070	**C222_36.8 S1 M1LA4**	126	**C222_36.8 P80BN80A4**	127
38	130	2.3	36.1	5500	**C322_36.1 S1 M1LA4**	130	**C322_36.1 P80BN80A4**	131
42	119	1.7	33.1	3970	**C222_33.1 S1 M1LA4**	126	**C222_33.1 P80BN80A4**	127
42	119	2.5	33.1	5500	**C322_33.1 S1 M1LA4**	130	**C322_33.1 P80BN80A4**	131
46	107	2.8	29.8	5500	**C322_29.8 S1 M1LA4**	130	**C322_29.8 P80BN80A4**	131
47	107	1.9	29.6	3890	**C222_29.6 S1 M1LA4**	126	**C222_29.6 P80BN80A4**	127
47	106	0.8	29.5	1820	**C122_29.5 S1 M1LA4**	122	**C122_29.5 P80BN80A4**	123

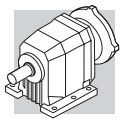

0.55 kW

n_2 min^{-1}	M_2 Nm	S	i	R_{n2} N	IE1		IEC IE1	
51	98	2.0	27.2	3860	**C222_27.2 S1 M1LA4**	126	**C222_27.2 P80BN80A4**	127
51	97	3.1	26.9	5500	**C322_26.9 S1 M1LA4**	130	**C322_26.9 P80BN80A4**	131
54	92	1.0	25.4	2000	**C122_25.4 S1 M1LA4**	122	**C122_25.4 P80BN80A4**	123
55	91	3.3	25.1	5500	**C322_25.1 S1 M1LA4**	130	**C322_25.1 P80BN80A4**	131
57	88	2.3	24.3	3720	**C222_24.3 S1 M1LA4**	126	**C222_24.3 P80BN80A4**	127
59	84	1.0	23.2	2000	**C122_23.2 S1 M1LA4**	122	**C122_23.2 P80BN80A4**	123
64	77	2.5	21.5	3700	**C222_21.5 S1 M1LA4**	126	**C222_21.5 P80BN80A4**	127
67	74	1.1	20.6	2000	**C122_20.6 S1 M1LA4**	122	**C122_20.6 P80BN80A4**	123
69	72	2.6	20.0	3560	**C222_20.0 S1 M1LA4**	126	**C222_20.0 P80BN80A4**	127
75	66	1.2	18.4	2000	**C122_18.4 S1 M1LA4**	122	**C122_18.4 P80BN80A4**	123
76	65	2.8	18.1	3500	**C222_18.1 S1 M1LA4**	126	**C222_18.1 P80BN80A4**	127
80	62	1.2	17.2	2000	**C122_17.2 S1 M1LA4**	122	**C122_17.2 P80BN80A4**	123
87	57	3.1	15.8	3350	**C222_15.8 S1 M1LA4**	126	**C222_15.8 P80BN80A4**	127
89	56	1.3	15.4	2000	**C122_15.4 S1 M1LA4**	122	**C122_15.4 P80BN80A4**	123
95	53	3.2	14.5	3300	**C222_14.5 S1 M1LA4**	126	**C222_14.5 P80BN80A4**	127
103	48	1.4	13.4	1990	**C122_13.4 S1 M1LA4**	122	**C122_13.4 P80BN80A4**	123
116	43	1.6	11.9	1920	**C122_11.9 S1 M1LA4**	122	**C122_11.9 P80BN80A4**	123
121	41	1.6	7.6	1910	**C122_7.6 S2 M2SA6**	122	**C122_7.6 P80 BN80B6**	123
123	40	1.0	11.2	480	**C052_11.2 S1 M1LA4**	121		
137	36	1.7	10.1	1850	**C122_10.1 S1 M1LA4**	122	**C122_10.1 P80BN80A4**	123
151	33	3.3	6.1	2860	**C222_6.1 S2 M2SA6**	126	**C222_6.1 P80 BN80B6**	127
156	32	1.9	8.8	1780	**C122_8.8 S1 M1LA4**	122	**C122_8.8 P80BN80A4**	123
181	28	2.0	7.6	1720	**C122_7.6 S1 M1LA4**	122	**C122_7.6 P80BN80A4**	123
186	27	1.1	7.4	460	**C052_7.4 S1 M1LA4**	121		
206	24	1.2	6.7	450	**C052_6.7 S1 M1LA4**	121		
221	22	2.4	6.2	1590	**C122_6.2 S1 M1LA4**	122	**C122_6.2 P80BN80A4**	123
237	21	2.5	11.9	1580	**C122_11.9 S1 M1SD2**	122	**C122_11.9 P71 BN71B2**	123
246	20	2.5	5.6	1540	**C122_5.6 S1 M1LA4**	122	**C122_5.6 P80BN80A4**	123
251	20	1.5	5.5	430	**C052_5.5 S1 M1LA4**	121		
279	18	2.7	10.1	1530	**C122_10.1 S1 M1SD2**	122	**C122_10.1 P71 BN71B2**	123
283	18	2.7	4.9	1490	**C122_4.9 S1 M1LA4**	122	**C122_4.9 P80BN80A4**	123
320	16	3.0	8.8	1470	**C122_8.8 S1 M1SD2**	122	**C122_8.8 P71 BN71B2**	123
320	16	2.9	4.3	1420	**C122_4.3 S1 M1LA4**	122	**C122_4.3 P80BN80A4**	123
369	14	3.3	7.6	1410	**C122_7.6 S1 M1SD2**	122	**C122_7.6 P71 BN71B2**	123
378	13	3.2	3.7	1370	**C122_3.7 S1 M1LA4**	122	**C122_3.7 P80BN80A4**	123
451	11	3.8	6.2	1300	**C122_6.2 S1 M1SD2**	122	**C122_6.2 P71 BN71B2**	123
504	10	4.0	5.6	1260	**C122_5.6 S1 M1SD2**	122	**C122_5.6 P71 BN71B2**	123
577	9	4.4	4.9	1210	**C122_4.9 S1 M1SD2**	122	**C122_4.9 P71 BN71B2**	123
656	8	4.7	4.3	1170	**C122_4.3 S1 M1SD2**	122	**C122_4.3 P71 BN71B2**	123
770	6	5.2	3.7	1110	**C122_3.7 S1 M1SD2**	122	**C122_3.7 P71 BN71B2**	123
881	6	5.7	3.2	990	**C122_3.2 S1 M1SD2**	122	**C122_3.2 P71 BN71B2**	123
1007	5	6.1	2.8	950	**C122_2.8 S1 M1SD2**	122	**C122_2.8 P71 BN71B2**	123

0.75 kW

n_2 min^{-1}	M_2 Nm	S	i	R_{n2} N	IE2	IE3		IEC IE2	IE3	
0.86	7413	1.6	1081	85000	**C1004_1081 S3 ME3SA6**		159	**C1004_1081 P90 BE90S6**		160
0.93	6973	1.0	1006	60000	**C904_1006 S3 ME3SA6**		156	**C904_1006 P90 BE90S6**		157
1.2	5582	1.3	1240	60000	**C904_1240 S2 ME2SB4**	**C904_1240 S2 MX2SB4**	156	**C904_1240 P80 BE80B4**	**C904_1240 P80 BX80B4**	157
1.3	5117	1.4	1137	60000	**C904_1137 S2 ME2SB4**	**C904_1137 S2 MX2SB4**	156	**C904_1137 P80 BE80B4**	**C904_1137 P80 BX80B4**	157
1.3	4865	2.5	1081	85000	**C1004_1081 S2 ME2SB4**	**C1004_1081 S2 MX2SB4**	159	**C1004_1081 P80 BE80B4**	**C1004_1081 P80 BX80B4**	160
1.4	4528	1.6	1006	60000	**C904_1006 S2 ME2SB4**	**C904_1006 S2 MX2SB4**	156	**C904_1006 P80 BE80B4**	**C904_1006 P80 BX80B4**	157
1.4	4517	2.7	1004	85000	**C1004_1004 S2 ME2SB4**	**C1004_1004 S2 MX2SB4**	159	**C1004_1004 P80 BE80B4**	**C1004_1004 P80 BX80B4**	160
1.5	4256	0.9	945.7	35000	**C804_945.7 S2 ME2SB4**	**C804_945.7 S2 MX2SB4**	153	**C804_945.7 P80 BE80B4**	**C804_945.7 P80 BX80B4**	154
1.6	4150	1.7	922.3	60000	**C904_922.3 S2 ME2SB4**	**C904_922.3 S2 MX2SB4**	156	**C904_922.3 P80 BE80B4**	**C904_922.3 P80 BX80B4**	157
1.6	4087	2.9	908.2	85000	**C1004_908.2 S2 ME2SB4**	**C1004_908.2 S2 MX2SB4**	159	**C1004_908.2 P80 BE80B4**	**C1004_908.2 P80 BX80B4**	160
1.7	3846	1.0	854.6	35000	**C804_854.6 S2 ME2SB4**	**C804_854.6 S2 MX2SB4**	153	**C804_854.6 P80 BE80B4**	**C804_854.6 P80 BX80B4**	154
1.7	3798	1.9	844.0	6000	**C904_844.0 S2 ME2SB4**	**C904_844.0 S2 MX2SB4**	156	**C904_844.0 P80 BE80B4**	**C904_844.0 P80 BX80B4**	157
1.8	3525	1.1	783.4	35000	**C804_783.4 S2 ME2SB4**	**C804_783.4 S2 MX2SB4**	153	**C804_783.4 P80 BE80B4**	**C804_783.4 P80 BX80B4**	154
1.8	3481	2.1	773.6	60000	**C904_773.6 S2 ME2SB4**	**C904_773.6 S2 MX2SB4**	156	**C904_773.6 P80 BE80B4**	**C904_773.6 P80 BX80B4**	157
2.0	3261	1.2	724.7	35000	**C804_724.7 S2 ME2SB4**	**C804_724.7 S2 MX2SB4**	153	**C804_724.7 P80 BE80B4**	**C804_724.7 P80 BX80B4**	154
2.0	3205	2.2	712.2	60000	**C904_712.2 S2 ME2SB4**	**C904_712.2 S2 MX2SB4**	156	**C904_712.2 P80 BE80B4**	**C904_712.2 P80 BX80B4**	157

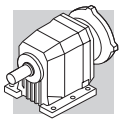

0.75 kW

n_2 min^{-1}	M_2 Nm	S	i	R_{n2} N	IE2	IE3		IEC IE2	IEC IE3	
2.2	2989	1.3	664.3	35000	**C804_664.3 S2 ME2SB4**	**C804_664.3 S2 MX2SB4**	153	**C804_664.3 P80 BE80B4**	**C804_664.3 P80 BX80B4**	154
2.2	2938	2.5	652.8	60000	**C904_652.8 S2 ME2SB4**	**C904_652.8 S2 MX2SB4**	156	**C904_652.8 P80 BE80B4**	**C904_652.8 P80 BX80B4**	157
2.5	2623	2.7	582.8	60000	**C904_582.8 S2 ME2SB4**	**C904_582.8 S2 MX2SB4**	156	**C904_582.8 P80 BE80B4**	**C904_582.8 P80 BX80B4**	157
2.5	2598	1.5	577.4	35000	**C804_577.4 S2 ME2SB4**	**C804_577.4 S2 MX2SB4**	153	**C804_577.4 P80 BE80B4**	**C804_577.4 P80 BX80B4**	154
2.6	2496	0.9	554.7	25000	**C704_554.7 S2 ME2SB4**	**C704_554.7 S2 MX2SB4**	150	**C704_554.7 P80 BE80B4**	**C704_554.7 P80 BX80B4**	151
2.7	2404	3.0	534.2	60000	**C904_534.2 S2 ME2SB4**	**C904_534.2 S2 MX2SB4**	156	**C904_534.2 P80 BE80B4**	**C904_534.2 P80 BX80B4**	157
2.7	2382	1.7	529.3	35000	**C804_529.3 S2 ME2SB4**	**C804_529.3 S2 MX2SB4**	153	**C804_529.3 P80 BE80B4**	**C804_529.3 P80 BX80B4**	154
2.8	2304	1.0	512.0	25000	**C704_512.0 S2 ME2SB4**	**C704_512.0 S2 MX2SB4**	150	**C704_512.0 P80 BE80B4**	**C704_512.0 P80 BX80B4**	151
3.1	2049	2.0	455.4	35000	**C804_455.4 S2 ME2SB4**	**C804_455.4 S2 MX2SB4**	153	**C804_455.4 P80 BE80B4**	**C804_455.4 P80 BX80B4**	154
3.2	1996	1.2	443.5	25000	**C704_443.5 S2 ME2SB4**	**C704_443.5 S2 MX2SB4**	150	**C704_443.5 P80 BE80B4**	**C704_443.5 P80 BX80B4**	151
3.4	1897	0.8	421.5	16000	**C614_421.5 S2 ME2SB4**	**C614_421.5 S2 MX2SB4**	146	**C614_421.5 P80 BE80B4**	**C614_421.5 P80 BX80B4**	147
3.4	1879	2.1	417.5	35000	**C804_417.5 S2 ME2SB4**	**C804_417.5 S2 MX2SB4**	153	**C804_417.5 P80 BE80B4**	**C804_417.5 P80 BX80B4**	154
3.5	1842	1.2	409.4	25000	**C704_409.4 S2 ME2SB4**	**C704_409.4 S2 MX2SB4**	150	**C704_409.4 P80 BE80B4**	**C704_409.4 P80 BX80B4**	151
3.9	1666	1.0	370.1	16000	**C614_370.1 S2 ME2SB4**	**C614_370.1 S2 MX2SB4**	146	**C614_370.1 P80 BE80B4**	**C614_370.1 P80 BX80B4**	147
3.9	1696	1.4	239.3	25000	**C703_239.3 S3 ME3SA6**		150	**C703_239.3 P90 BE90S6**		151
3.9	1641	2.4	364.7	35000	**C804_364.7 S2 ME2SB4**	**C804_364.7 S2 MX2SB4**	153	**C804_364.7 P80 BE80B4**	**C804_364.7 P80 BX80B4**	154
4.2	1550	1.5	344.3	25000	**C704_344.3 S2 ME2SB4**	**C704_344.3 S2 MX2SB4**	150	**C704_344.3 P80 BE80B4**	**C704_344.3 P80 BX80B4**	151
4.2	1520	1.1	337.7	16000	**C614_337.7 S2 ME2SB4**	**C614_337.7 S2 MX2SB4**	146	**C614_337.7 P80 BE80B4**	**C614_337.7 P80 BX80B4**	147
4.3	1504	2.7	334.3	35000	**C804_334.3 S2 ME2SB4**	**C804_334.3 S2 MX2SB4**	153	**C804_334.3 P80 BE80B4**	**C804_334.3 P80 BX80B4**	154
4.3	1529	2.6	215.8	35000	**C803_215.8 S3 ME3SA6**		153	**C803_215.8 P90 BE90S6**		154
4.5	1430	1.6	317.9	25000	**C704_317.9 S2 ME2SB4**	**C704_317.9 S2 MX2SB4**	150	**C704_317.9 P80 BE80B4**	**C704_317.9 P80 BX80B4**	151
4.7	1358	1.2	301.7	16000	**C614_301.7 S2 ME2SB4**	**C614_301.7 S2 MX2SB4**	146	**C614_301.7 P80 BE80B4**	**C614_301.7 P80 BX80B4**	147
4.8	1387	1.2	195.8	16000	**C613_195.8 S3 ME3SA6**		146	**C613_195.8 P90 BE90S6**		147
5.2	1239	1.3	275.3	16000	**C614_275.3 S2 ME2SB4**	**C614_275.3 S2 MX2SB4**	146	**C614_275.3 P80 BE80B4**	**C614_275.3 P80 BX80B4**	147
5.2	1265	1.3	178.6	16000	**C613_178.6 S3 ME3SA6**		146	**C613_178.6 P90 BE90S6**		147
5.3	1225	1.9	272.2	25000	**C704_272.2 S2 ME2SB4**	**C704_272.2 S2 MX2SB4**	150	**C704_272.2 P80 BE80B4**	**C704_272.2 P80 BX80B4**	151
5.4	1187	0.8	263.8	10000	**C514_263.8 S2 ME2SB4**	**C514_263.8 S2 MX2SB4**	142	**C514_263.8 P80 BE80B4**	**C514_263.8 P80 BX80B4**	143
5.7	1165	1.4	164.5	16000	**C613_164.5 S3 ME3SA6**		146	**C613_164.5 P90 BE90S6**		147
5.7	1131	2.0	251.3	25000	**C704_251.3 S2 ME2SB4**	**C704_251.3 S2 MX2SB4**	150	**C704_251.3 P80 BE80B4**	**C704_251.3 P80 BX80B4**	151
5.9	1084	0.9	240.9	10000	**C514_240.9 S2 ME2SB4**	**C514_240.9 S2 MX2SB4**	142	**C514_240.9 P80 BE80B4**	**C514_240.9 P80 BX80B4**	143
6.0	1113	2.1	239.3	25000	**C703_239.3 S2 ME2SB4**	**C703_239.3 S2 MX2SB4**	150	**C703_239.3 P80 BE80B4**	**C703_239.3 P80 BX80B4**	151
6.0	1072	1.5	238.3	16000	**C614_238.3 S2 ME2SB4**	**C614_238.3 S2 MX2SB4**	146	**C614_238.3 P80 BE80B4**	**C614_238.3 P80 BX80B4**	147
6.5	1027	2.2	220.9	25000	**C703_220.9 S2 ME2SB4**	**C703_220.9 S2 MX2SB4**	150	**C703_220.9 P80 BE80B4**	**C703_220.9 P80 BX80B4**	151
6.6	978	1.6	217.4	16000	**C614_217.4 S2 ME2SB4**	**C614_217.4 S2 MX2SB4**	146	**C614_217.4 P80 BE80B4**	**C614_217.4 P80 BX80B4**	147
6.6	1008	1.0	216.7	10000	**C513_216.7 S2 ME2SB4**	**C513_216.7 S2 MX2SB4**	142	**C513_216.7 P80 BE80B4**	**C513_216.7 P80 BX80B4**	143
7.2	920	1.1	197.9	10000	**C513_197.9 S2 ME2SB4**	**C513_197.9 S2 MX2SB4**	142	**C513_197.9 P80 BE80B4**	**C513_197.9 P80 BX80B4**	143
7.3	881	1.8	195.8	16000	**C613_195.8 S2 ME2SB4**	**C613_195.8 S2 MX2SB4**	146	**C613_195.8 P80 BE80B4**	**C613_195.8 P80 BX80B4**	147
7.4	903	2.5	194.1	25000	**C703_194.1 S2 ME2SB4**	**C703_194.1 S2 MX2SB4**	150	**C703_194.1 P80 BE80B4**	**C703_194.1 P80 BX80B4**	151
8.0	833	2.8	179.2	25000	**C703_179.2 S2 ME2SB4**	**C703_179.2 S2 MX2SB4**	150	**C703_179.2 P80 BE80B4**	**C703_179.2 P80 BX80B4**	151
8.0	804	2.0	178.6	16000	**C613_178.6 S2 ME2SB4**	**C613_178.6 S2 MX2SB4**	146	**C613_178.6 P80 BE80B4**	**C613_178.6 P80 BX80B4**	147
8.1	817	1.2	175.8	10000	**C513_175.8 S2 ME2SB4**	**C513_175.8 S2 MX2SB4**	142	**C513_175.8 P80 BE80B4**	**C513_175.8 P80 BX80B4**	143
8.7	740	2.2	164.5	16000	**C613_164.5 S2 ME2SB4**	**C613_164.5 S2 MX2SB4**	146	**C613_164.5 P80 BE80B4**	**C613_164.5 P80 BX80B4**	147
8.8	757	3.0	162.8	25000	**C703_162.8 S2 ME2SB4**	**C703_162.8 S2 MX2SB4**	150	**C703_162.8 P80 BE80B4**	**C703_162.8 P80 BX80B4**	151
8.9	746	1.3	160.5	10000	**C513_160.5 S2 ME2SB4**	**C513_160.5 S2 MX2SB4**	142	**C513_160.5 P80 BE80B4**	**C513_160.5 P80 BX80B4**	143
9.5	675	2.4	150.0	16000	**C613_150.0 S2 ME2SB4**	**C613_150.0 S2 MX2SB4**	146	**C613_150.0 P80 BE80B4**	**C613_150.0 P80 BX80B4**	147
9.7	686	1.5	147.4	10000	**C513_147.4 S2 ME2SB4**	**C513_147.4 S2 MX2SB4**	142	**C513_147.4 P80 BE80B4**	**C513_147.4 P80 BX80B4**	143
10.2	632	2.5	140.5	16000	**C613_140.5 S2 ME2SB4**	**C613_140.5 S2 MX2SB4**	146	**C613_140.5 P80 BE80B4**	**C613_140.5 P80 BX80B4**	147
10.6	626	1.6	134.6	10000	**C513_134.6 S2 ME2SB4**	**C513_134.6 S2 MX2SB4**	142	**C513_134.6 P80 BE80B4**	**C513_134.6 P80 BX80B4**	143
10.8	618	1.0	132.9	7000	**C413_132.9 S2 ME2SB4**	**C413_132.9 S2 MX2SB4**	138	**C413_132.9 P80 BE80B4**	**C413_132.9 P80 BX80B4**	139
11.2	577	2.8	128.1	16000	**C613_128.1 S2 ME2SB4**	**C613_128.1 S2 MX2SB4**	146	**C613_128.1 P80 BE80B4**	**C613_128.1 P80 BX80B4**	147
11.5	579	1.7	124.4	10000	**C513_124.4 S2 ME2SB4**	**C513_124.4 S2 MX2SB4**	142	**C513_124.4 P80 BE80B4**	**C513_124.4 P80 BX80B4**	143
11.9	561	1.1	120.6	7000	**C413_120.6 S2 ME2SB4**	**C413_120.6 S2 MX2SB4**	138	**C413_120.6 P80 BE80B4**	**C413_120.6 P80 BX80B4**	139
12.6	511	3.1	113.6	16000	**C613_113.6 S2 ME2SB4**	**C613_113.6 S2 MX2SB4**	146	**C613_113.6 P80 BE80B4**	**C613_113.6 P80 BX80B4**	147
12.6	528	1.9	113.6	10000	**C513_113.6 S2 ME2SB4**	**C513_113.6 S2 MX2SB4**	142	**C513_113.6 P80 BE80B4**	**C513_113.6 P80 BX80B4**	143
13.0	512	1.2	110.1	7000	**C413_110.1 S2 ME2SB4**	**C413_110.1 S2 MX2SB4**	138	**C413_110.1 P80 BE80B4**	**C413_110.1 P80 BX80B4**	139
13.8	466	3.4	103.6	16000	**C613_103.6 S2 ME2SB4**	**C613_103.6 S2 MX2SB4**	146	**C613_103.6 P80 BE80B4**	**C613_103.6 P80 BX80B4**	147
14.0	476	1.3	102.3	7000	**C413_102.3 S2 ME2SB4**	**C413_102.3 S2 MX2SB4**	138	**C413_102.3 P80 BE80B4**	**C413_102.3 P80 BX80B4**	139
14.0	475	0.9	102.2	6500	**C363_102.2 S2 ME2SB4**	**C363_102.2 S2 MX2SB4**	134	**C363_102.2 P80 BE80B4**	**C363_102.2 P80 BX80B4**	135
14.0	473	2.1	101.8	10000	**C513_101.8 S2 ME2SB4**	**C513_101.8 S2 MX2SB4**	142	**C513_101.8 P80 BE80B4**	**C513_101.8 P80 BX80B4**	143
15.3	434	1.4	93.3	7000	**C413_93.3 S2 ME2SB4**	**C413_93.3 S2 MX2SB4**	138	**C413_93.3 P80 BE80B4**	**C413_93.3 P80 BX80B4**	139
15.4	432	2.3	93.0	10000	**C513_93.0 S2 ME2SB4**	**C513_93.0 S2 MX2SB4**	142	**C513_93.0 P80 BE80B4**	**C513_93.0 P80 BX80B4**	143
15.6	427	1.1	91.9	6500	**C363_91.9 S2 ME2SB4**	**C363_91.9 S2 MX2SB4**	134	**C363_91.9 P80 BE80B4**	**C363_91.9 P80 BX80B4**	135
17.2	387	1.2	83.1	6500	**C363_83.1 S2 ME2SB4**	**C363_83.1 S2 MX2SB4**	134	**C363_83.1 P80 BE80B4**	**C363_83.1 P80 BX80B4**	135
17.5	379	1.6	81.5	7000	**C413_81.5 S2 ME2SB4**	**C413_81.5 S2 MX2SB4**	138	**C413_81.5 P80 BE80B4**	**C413_81.5 P80 BX80B4**	139
17.9	371	2.7	79.9	10000	**C513_79.9 S2 ME2SB4**	**C513_79.9 S2 MX2SB4**	142	**C513_79.9 P80 BE80B4**	**C513_79.9 P80 BX80B4**	143
18.4	361	1.2	77.6	6500	**C363_77.6 S2 ME2SB4**	**C363_77.6 S2 MX2SB4**	134	**C363_77.6 P80 BE80B4**	**C363_77.6 P80 BX80B4**	135
19.2	346	1.7	74.4	7000	**C413_74.4 S2 ME2SB4**	**C413_74.4 S2 MX2SB4**	138	**C413_74.4 P80 BE80B4**	**C413_74.4 P80 BX80B4**	139
19.6	339	2.9	72.9	10000	**C513_72.9 S2 ME2SB4**	**C513_72.9 S2 MX2SB4**	142	**C513_72.9 P80 BE80B4**	**C513_72.9 P80 BX80B4**	143
20.2	329	1.4	70.8	6500	**C363_70.8 S2 ME2SB4**	**C363_70.8 S2 MX2SB4**	134	**C363_70.8 P80 BE80B4**	**C363_70.8 P80 BX80B4**	135

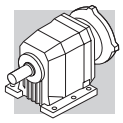

0.75 kW

n_2 min-1	M_2 Nm	S	i	R_{n2} N	IE2	IE3		IEC IE2	IEC IE3	
22.1	300	3.3	64.6	10000	**C513_64.6 S2 ME2SB4**	**C513_64.6 S2 MX2SB4**	142	**C513_64.6 P80 BE80B4**	**C513_64.6 P80 BX80B4**	143
22.2	299	2.0	64.3	7000	**C413_64.3 S2 ME2SB4**	**C413_64.3 S2 MX2SB4**	138	**C413_64.3 P80 BE80B4**	**C413_64.3 P80 BX80B4**	139
23.0	295	1.0	40.7	5500	**C322_40.7 S3 ME3SA6**		130	**C322_40.7 P90 BE90S6**		131
23.1	288	1.6	62.0	6500	**C363_62.0 S2 ME2SB4**	**C363_62.0 S2 MX2SB4**	134	**C363_62.0 P80 BE80B4**	**C363_62.0 P80 BX80B4**	135
24.4	273	2.2	58.7	7000	**C413_58.7 S2 ME2SB4**	**C413_58.7 S2 MX2SB4**	138	**C413_58.7 P80 BE80B4**	**C413_58.7 P80 BX80B4**	139
25.1	271	2.9	57.0	10000	**C512_57.0 S2 ME2SB4**	**C512_57.0 S2 MX2SB4**	142	**C512_57.0 P80 BE80B4**	**C512_57.0 P80 BX80B4**	143
25.5	261	1.7	56.2	6500	**C363_56.2 S2 ME2SB4**	**C363_56.2 S2 MX2SB4**	134	**C363_56.2 P80 BE80B4**	**C363_56.2 P80 BX80B4**	135
27.3	249	1.2	52.4	5500	**C322_52.4 S2 ME2SB4**	**C322_52.4 S2 MX2SB4**	130	**C322_52.4 P80 BE80B4**	**C322_52.4 P80 BX80B4**	131
27.8	239	2.5	51.5	7000	**C413_51.5 S2 ME2SB4**	**C413_51.5 S2 MX2SB4**	138	**C413_51.5 P80 BE80B4**	**C413_51.5 P80 BX80B4**	139
27.8	244	2.9	51.4	10000	**C512_51.4 S2 ME2SB4**	**C512_51.4 S2 MX2SB4**	142	**C512_51.4 P80 BE80B4**	**C512_51.4 P80 BX80B4**	143
29.7	224	2.0	48.2	6500	**C363_48.2 S2 ME2SB4**	**C363_48.2 S2 MX2SB4**	134	**C363_48.2 P80 BE80B4**	**C363_48.2 P80 BX80B4**	135
29.9	227	3.5	47.8	10000	**C512_47.8 S2 ME2SB4**	**C512_47.8 S2 MX2SB4**	142	**C512_47.8 P80 BE80B4**	**C512_47.8 P80 BX80B4**	143
30	218	2.7	47.0	7000	**C413_47.0 S2 ME2SB4**	**C413_47.0 S2 MX2SB4**	138	**C413_47.0 P80 BE80B4**	**C413_47.0 P80 BX80B4**	139
32	215	1.4	45.3	5500	**C322_45.3 S2 ME2SB4**	**C322_45.3 S2 MX2SB4**	130	**C322_45.3 P80 BE80B4**	**C322_45.3 P80 BX80B4**	131
32	213	2.4	44.8	7000	**C412_44.8 S2 ME2SB4**	**C412_44.8 S2 MX2SB4**	138	**C412_44.8 P80 BE80B4**	**C412_44.8 P80 BX80B4**	139
33	202	2.2	43.5	6500	**C363_43.5 S2 ME2SB4**	**C363_43.5 S2 MX2SB4**	134	**C363_43.5 P80 BE80B4**	**C363_43.5 P80 BX80B4**	135
33	206	0.9	43.3	3810	**C222_43.3 S2 ME2SB4**	**C222_43.3 S2 MX2SB4**	126	**C222_43.3 P80 BE80B4**	**C222_43.3 P80 BX80B4**	127
35	193	1.6	40.7	5500	**C322_40.7 S2 ME2SB4**	**C322_40.7 S2 MX2SB4**	130	**C322_40.7 P80 BE80B4**	**C322_40.7 P80 BX80B4**	131
38	177	2.5	38.1	6500	**C363_38.1 S2 ME2SB4**	**C363_38.1 S2 MX2SB4**	134	**C363_38.1 P80 BE80B4**	**C363_38.1 P80 BX80B4**	135
39	176	2.8	37.1	7000	**C412_37.1 S2 ME2SB4**	**C412_37.1 S2 MX2SB4**	138	**C412_37.1 P80 BE80B4**	**C412_37.1 P80 BX80B4**	139
39	175	1.1	36.8	3750	**C222_36.8 S2 ME2SB4**	**C222_36.8 S2 MX2SB4**	126	**C222_36.8 P80 BE80B4**	**C222_36.8 P80 BX80B4**	127
40	171	1.7	36.1	5500	**C322_36.1 S2 ME2SB4**	**C322_36.1 S2 MX2SB4**	130	**C322_36.1 P80 BE80B4**	**C322_36.1 P80 BX80B4**	131
41	161	2.8	34.6	6500	**C363_34.6 S2 ME2SB4**	**C363_34.6 S2 MX2SB4**	134	**C363_34.6 P80 BE80B4**	**C363_34.6 P80 BX80B4**	135
43	159	3.2	33.4	7000	**C412_33.4 S2 ME2SB4**	**C412_33.4 S2 MX2SB4**	138	**C412_33.4 P80 BE80B4**	**C412_33.4 P80 BX80B4**	139
43	157	1.3	33.1	3680	**C222_33.1 S2 ME2SB4**	**C222_33.1 S2 MX2SB4**	126	**C222_33.1 P80 BE80B4**	**C222_33.1 P80 BX80B4**	127
43	157	1.9	33.1	5500	**C322_33.1 S2 ME2SB4**	**C322_33.1 S2 MX2SB4**	130	**C322_33.1 P80 BE80B4**	**C322_33.1 P80 BX80B4**	131
48	141	2.1	29.8	5500	**C322_29.8 S2 ME2SB4**	**C322_29.8 S2 MX2SB4**	130	**C322_29.8 P80 BE80B4**	**C322_29.8 P80 BX80B4**	131
48	141	1.4	29.6	3630	**C222_29.6 S2 ME2SB4**	**C222_29.6 S2 MX2SB4**	126	**C222_29.6 P80 BE80B4**	**C222_29.6 P80 BX80B4**	127
50	134	3.4	28.7	6490	**C363_28.7 S2 ME2SB4**	**C363_28.7 S2 MX2SB4**	134	**C363_28.7 P80 BE80B4**	**C363_28.7 P80 BX80B4**	135
53	129	1.6	27.2	3600	**C222_27.2 S2 ME2SB4**	**C222_27.2 S2 MX2SB4**	126	**C222_27.2 P80 BE80B4**	**C222_27.2 P80 BX80B4**	127
53	128	2.3	26.9	5500	**C322_26.9 S2 ME2SB4**	**C322_26.9 S2 MX2SB4**	130	**C322_26.9 P80 BE80B4**	**C322_26.9 P80 BX80B4**	131
57	119	2.5	25.1	5460	**C322_25.1 S2 ME2SB4**	**C322_25.1 S2 MX2SB4**	130	**C322_25.1 P80 BE80B4**	**C322_25.1 P80 BX80B4**	131
59	115	1.7	24.3	3510	**C222_24.3 S2 ME2SB4**	**C222_24.3 S2 MX2SB4**	126	**C222_24.3 P80 BE80B4**	**C222_24.3 P80 BX80B4**	127
62	109	2.7	22.9	5300	**C322_22.9 S2 ME2SB4**	**C322_22.9 S2 MX2SB4**	130	**C322_22.9 P80 BE80B4**	**C322_22.9 P80 BX80B4**	131
67	102	1.9	21.5	3480	**C222_21.5 S2 ME2SB4**	**C222_21.5 S2 MX2SB4**	126	**C222_21.5 P80 BE80B4**	**C222_21.5 P80 BX80B4**	127
71	95	3.1	20.1	5150	**C322_20.1 S2 ME2SB4**	**C322_20.1 S2 MX2SB4**	130	**C322_20.1 P80 BE80B4**	**C322_20.1 P80 BX80B4**	131
71	95	2.0	20.0	3380	**C222_20.0 S2 ME2SB4**	**C222_20.0 S2 MX2SB4**	126	**C222_20.0 P80 BE80B4**	**C222_20.0 P80 BX80B4**	127
79	86	2.1	18.1	3350	**C222_18.1 S2 ME2SB4**	**C222_18.1 S2 MX2SB4**	126	**C222_18.1 P80 BE80B4**	**C222_18.1 P80 BX80B4**	127
83	82	0.9	17.2	1750	**C122_17.2 S2 ME2SB4**	**C122_17.2 S2 MX2SB4**	122	**C122_17.2 P80 BE80B4**	**C122_17.2 P80 BX80B4**	123
90	75	2.3	15.8	3210	**C222_15.8 S2 ME2SB4**	**C222_15.8 S2 MX2SB4**	126	**C222_15.8 P80 BE80B4**	**C222_15.8 P80 BX80B4**	127
93	73	1.0	15.4	1920	**C122_15.4 S2 ME2SB4**	**C122_15.4 S2 MX2SB4**	122	**C122_15.4 P80 BE80B4**	**C122_15.4 P80 BX80B4**	123
98	69	2.4	14.5	3200	**C222_14.5 S2 ME2SB4**	**C222_14.5 S2 MX2SB4**	126	**C222_14.5 P80 BE80B4**	**C222_14.5 P80 BX80B4**	127
107	64	1.1	13.4	1870	**C122_13.4 S2 ME2SB4**	**C122_13.4 S2 MX2SB4**	122	**C122_13.4 P80 BE80B4**	**C122_13.4 P80 BX80B4**	123
115	59	2.7	12.4	3030	**C222_12.4 S2 ME2SB4**	**C222_12.4 S2 MX2SB4**	126	**C222_12.4 P80 BE80B4**	**C222_12.4 P80 BX80B4**	127
120	56	1.2	11.9	1780	**C122_11.9 S2 ME2SB4**	**C122_11.9 S2 MX2SB4**	122	**C122_11.9 P80 BE80B4**	**C122_11.9 P80 BX80B4**	123
129	53	2.9	11.1	2980	**C222_11.1 S2 ME2SB4**	**C222_11.1 S2 MX2SB4**	126	**C222_11.1 P80 BE80B4**	**C222_11.1 P80 BX80B4**	127
142	48	1.3	10.1	1760	**C122_10.1 S2 ME2SB4**	**C122_10.1 S2 MX2SB4**	122	**C122_10.1 P80 BE80B4**	**C122_10.1 P80 BX80B4**	123
148	46	3.2	9.6	2840	**C222_9.6 S2 ME2SB4**	**C222_9.6 S2 MX2SB4**	126	**C222_9.6 P80 BE80B4**	**C222_9.6 P80 BX80B4**	127
162	42	1.4	8.8	1700	**C122_8.8 S2 ME2SB4**	**C122_8.8 S2 MX2SB4**	122	**C122_8.8 P80 BE80B4**	**C122_8.8 P80 BX80B4**	123
165	41	3.4	8.7	2760	**C222_8.7 S2 ME2SB4**	**C222_8.7 S2 MX2SB4**	126	**C222_8.7 P80 BE80B4**	**C222_8.7 P80 BX80B4**	127
188	36	1.5	7.6	1650	**C122_7.6 S2 ME2SB4**	**C122_7.6 S2 MX2SB4**	122	**C122_7.6 P80 BE80B4**	**C122_7.6 P80 BX80B4**	123
229	30	1.8	6.2	1530	**C122_6.2 S2 ME2SB4**	**C122_6.2 S2 MX2SB4**	122	**C122_6.2 P80 BE80B4**	**C122_6.2 P80 BX80B4**	123
240	28	2.4	11.9	1520	**C122_11.9 S2 ME2SA2**		122	**C122_11.9 P80 BE80A2**		123
255	27	1.9	5.6	1470	**C122_5.6 S2 ME2SB4**	**C122_5.6 S2 MX2SB4**	122	**C122_5.6 P80 BE80B4**	**C122_5.6 P80 BX80B4**	123
283	24	2.6	10.1	1490	**C122_10.1 S2 ME2SA2**		122	**C122_10.1 P80 BE80A2**		123
294	23	2.1	4.9	1440	**C122_4.9 S2 ME2SB4**	**C122_4.9 S2 MX2SB4**	122	**C122_4.9 P80 BE80B4**	**C122_4.9 P80 BX80B4**	123
323	21	2.8	8.8	1420	**C122_8.8 S2 ME2SA2**		122	**C122_8.8 P80 BE80A2**		123
332	20	2.2	4.3	1370	**C122_4.3 S2 ME2SB4**	**C122_4.3 S2 MX2SB4**	122	**C122_4.3 P80 BE80B4**	**C122_4.3 P80 BX80B4**	123
374	18	3.1	7.6	1380	**C122_7.6 S2 ME2SA2**		122	**C122_7.6 P80 BE80A2**		123
392	17	2.4	3.7	1330	**C122_3.7 S2 ME2SB4**	**C122_3.7 S2 MX2SB4**	122	**C122_3.7 P80 BE80B4**	**C122_3.7 P80 BX80B4**	123
446	15	2.6	3.2	1280	**C122_3.2 S2 ME2SB4**	**C122_3.2 S2 MX2SB4**	122	**C122_3.2 P80 BE80B4**	**C122_3.2 P80 BX80B4**	123
457	15	3.6	6.2	1280	**C122_6.2 S2 ME2SA2**		122	**C122_6.2 P80 BE80A2**		123
509	13	3.8	5.6	1240	**C122_5.6 S2 ME2SA2**		122	**C122_5.6 P80 BE80A2**		123
517	13	2.8	2.8	1230	**C122_2.8 S2 ME2SB4**	**C122_2.8 S2 MX2SB4**	122	**C122_2.8 P80 BE80B4**	**C122_2.8 P80 BX80B4**	123
585	12	4.1	4.9	1190	**C122_4.9 S2 ME2SA2**		122	**C122_4.9 P80 BE80A2**		123
661	10	4.4	4.3	1050	**C122_4.3 S2 ME2SA2**		122	**C122_4.3 P80 BE80A2**		123
781	9	4.8	3.7	1090	**C122_3.7 S2 ME2SA2**		122	**C122_3.7 P80 BE80A2**		123
889	8	5.2	3.2	1050	**C122_3.2 S2 ME2SA2**		122	**C122_3.2 P80 BE80A2**		123
1030	7	5.6	2.8	1010	**C122_2.8 S2 ME2SA2**		122	**C122_2.8 P80 BE80A2**		123

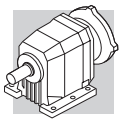

1.1 kW

n_2 min^{-1}	M_2 Nm	S	i	R_{n2} N	IE2	IE3		IEC IE2	IEC IE3	
0.87	10815	1.1	1081	85000	**C1004_1081 S3 ME3LA6**		159	**C1004_1081 P100 BE100M6**		160
0.94	10043	1.2	1004	85000	**C1004_908.2 S3 ME3LA6**		159	**C1004_908.2 P100 BE100M6**		160
1.3	7573	1.0	1137	60000	**C904_1137 S3 ME3SA4**	**C904_1137 S3 MX3SA4**	156	**C904_1137 P90 BE90S4**	**C904_1137 P90 BX90S4**	157
1.3	7200	1.7	1081	85000	**C1004_1081 S3 ME3SA4**	**C1004_1081 S3 MX3SA4**	159	**C1004_1081 P90 BE90S4**	**C1004_1081 P90 BX90S4**	160
1.4	6701	1.1	1006	60000	**C904_1006 S3 ME3SA4**	**C904_1006 S3 MX3SA4**	156	**C904_1006 P90 BE90S4**	**C904_1006 P90 BX90S4**	157
1.4	6686	1.8	1004	85000	**C1004_1004 S3 ME3SA4**	**C1004_1004 S3 MX3SA4**	159	**C1004_1004 P90 BE90S4**	**C1004_1004 P90 BX90S4**	160
1.6	6143	1.2	922.3	60000	**C904_922.3 S3 ME3SA4**	**C904_922.3 S3 MX3SA4**	156	**C904_922.3 P90 BE90S4**	**C904_922.3 P90 BX90S4**	157
1.6	6049	2.0	908.2	85000	**C1004_908.2 S3 ME3SA4**	**C1004_908.2 S3 MX3SA4**	159	**C1004_908.2 P90 BE90S4**	**C1004_908.2 P90 BX90S4**	160
1.7	5621	1.3	844.0	60000	**C904_844.0 S3 ME3SA4**	**C904_844.0 S3 MX3SA4**	156	**C904_844.0 P90 BE90S4**	**C904_844.0 P90 BX90S4**	157
1.7	5617	2.1	843.3	85000	**C1004_843.3 S3 ME3SA4**	**C1004_843.3 S3 MX3SA4**	159	**C1004_843.3 P90 BE90S4**	**C1004_843.3 P90 BX90S4**	160
1.8	5166	2.3	775.7	85000	**C1004_775.7 S3 ME3SA4**	**C1004_775.7 S3 MX3SA4**	159	**C1004_775.7 P90 BE90S4**	**C1004_775.7 P90 BX90S4**	160
1.8	5152	1.4	773.6	60000	**C904_773.6 S3 ME3SA4**	**C904_773.6 S3 MX3SA4**	156	**C904_773.6 P90 BE90S4**	**C904_773.6 P90 BX90S4**	157
2.0	4797	2.5	720.3	85000	**C1004_720.3 S3 ME3SA4**	**C1004_720.3 S3 MX3SA4**	159	**C1004_720.3 P90 BE90S4**	**C1004_720.3 P90 BX90S4**	160
2.0	4743	1.5	712.2	60000	**C904_712.2 S3 ME3SA4**	**C904_712.2 S3 MX3SA4**	156	**C904_712.2 P90 BE90S4**	**C904_712.2 P90 BX90S4**	157
2.2	4424	0.9	664.3	35000	**C804_664.3 S3 ME3SA4**	**C804_664.3 S3 MX3SA4**	153	**C804_664.3 P90 BE90S4**	**C804_664.3 P90 BX90S4**	154
2.2	4348	1.7	652.8	60000	**C904_652.8 S3 ME3SA4**	**C904_652.8 S3 MX3SA4**	156	**C904_652.8 P90 BE90S4**	**C904_652.8 P90 BX90S4**	157
2.3	4179	2.9	627.4	85000	**C1004_627.4 S3 ME3SA4**	**C1004_627.4 S3 MX3SA4**	159	**C1004_627.4 P90 BE90S4**	**C1004_627.4 P90 BX90S4**	160
2.5	3881	1.9	582.8	60000	**C904_582.8 S3 ME3SA4**	**C904_582.8 S3 MX3SA4**	156	**C904_582.8 P90 BE90S4**	**C904_582.8 P90 BX90S4**	157
2.5	3845	1.0	577.4	35000	**C804_577.4 S3 ME3SA4**	**C804_577.4 S3 MX3SA4**	153	**C804_577.4 P90 BE90S4**	**C804_577.4 P90 BX90S4**	154
2.7	3558	2.0	534.2	60000	**C904_534.2 S3 ME3SA4**	**C904_534.2 S3 MX3SA4**	156	**C904_534.2 P90 BE90S4**	**C904_534.2 P90 BX90S4**	157
2.7	3525	1.1	529.3	35000	**C804_529.3 S3 ME3SA4**	**C804_529.3 S3 MX3SA4**	153	**C804_529.3 P90 BE90S4**	**C804_529.3 P90 BX90S4**	154
3.1	3045	2.4	457.1	60000	**C904_457.1 S3 ME3SA4**	**C904_457.1 S3 MX3SA4**	156	**C904_457.1 P90 BE90S4**	**C904_457.1 P90 BX90S4**	157
3.1	3033	1.3	455.4	35000	**C804_455.4 S3 ME3SA4**	**C804_455.4 S3 MX3SA4**	153	**C804_455.4 P90 BE90S4**	**C804_455.4 P90 BX90S4**	154
3.4	2791	2.6	419.0	60000	**C904_419.0 S3 ME3SA4**	**C904_419.0 S3 MX3SA4**	156	**C904_419.0 P90 BE90S4**	**C904_419.0 P90 BX90S4**	157
3.4	2780	1.4	417.5	35000	**C804_417.5 S3 ME3SA4**	**C804_417.5 S3 MX3SA4**	153	**C804_417.5 P90 BE90S4**	**C804_417.5 P90 BX90S4**	154
3.9	2463	2.9	369.8	60000	**C904_369.8 S3 ME3SA4**	**C904_369.8 S3 MX3SA4**	156	**C904_369.8 P90 BE90S4**	**C904_369.8 P90 BX90S4**	157
3.9	2429	1.6	364.7	35000	**C804_364.7 S3 ME3SA4**	**C804_364.7 S3 MX3SA4**	153	**C804_364.7 P90 BE90S4**	**C804_364.7 P90 BX90S4**	154
4.2	2293	1.0	344.3	25000	**C704_344.3 S3 ME3SA4**	**C704_344.3 S3 MX3SA4**	150	**C704_344.3 P90 BE90S4**	**C704_344.3 P90 BX90S4**	151
4.3	2226	1.8	334.3	35000	**C804_334.3 S3 ME3SA4**	**C804_334.3 S3 MX3SA4**	153	**C804_334.3 P90 BE90S4**	**C804_334.3 P90 BX90S4**	154
4.5	2117	1.1	317.9	25000	**C704_317.9 S3 ME3SA4**	**C704_317.9 S3 MX3SA4**	150	**C704_317.9 P90 BE90S4**	**C704_317.9 P90 BX90S4**	151
4.7	2010	0.8	301.7	16000	**C614_301.7 S3 ME3SA4**	**C614_301.7 S3 MX3SA4**	146	**C614_301.7 P90 BE90S4**	**C614_301.7 P90 BX90S4**	147
5.0	1903	2.1	285.7	35000	**C804_285.7 S3 ME3SA4**	**C804_285.7 S3 MX3SA4**	153	**C804_285.7 P90 BE90S4**	**C804_285.7 P90 BX90S4**	154
5.2	1833	0.9	275.3	16000	**C614_275.3 S3 ME3SA4**	**C614_275.3 S3 MX3SA4**	146	**C614_275.3 P90 BE90S4**	**C614_275.3 P90 BX90S4**	147
5.3	1813	1.3	272.2	25000	**C704_272.2 S3 ME3SA4**	**C704_272.2 S3 MX3SA4**	150	**C704_272.2 P90 BE90S4**	**C704_272.2 P90 BX90S4**	151
5.5	1744	2.3	261.9	35000	**C804_261.9 S3 ME3SA4**	**C804_261.9 S3 MX3SA4**	153	**C804_261.9 P90 BE90S4**	**C804_261.9 P90 BX90S4**	154
5.7	1674	1.4	251.3	25000	**C704_251.3 S3 ME3SA4**	**C704_251.3 S3 MX3SA4**	150	**C704_251.3 P90 BE90S4**	**C704_251.3 P90 BX90S4**	151
5.7	1700	0.9	164.5	16000	**C613_164.5 S3 ME3LA6**		146	**C613_164.5 P100 BE100M6**		147
6.0	1647	1.4	239.3	25000	**C703_239.3 S3 ME3SA4**	**C703_239.3 S3 MX3SA4**	150	**C703_239.3 P90 BE90S4**	**C703_239.3 P90 BX90S4**	151
6.0	1587	1.0	238.3	16000	**C614_238.3 S3 ME3SA4**	**C614_238.3 S3 MX3SA4**	146	**C614_238.3 P90 BE90S4**	**C614_238.3 P90 BX90S4**	147
6.3	1551	1.0	150.0	16000	**C613_150.0 S3 ME3LA6**		146	**C613_150.0 P100 BE100M6**		147
6.5	1520	1.5	220.9	25000	**C703_220.9 S3 ME3SA4**	**C703_220.9 S3 MX3SA4**	150	**C703_220.9 P90 BE90S4**	**C703_220.9 P90 BX90S4**	151
6.6	1448	1.1	217.4	16000	**C614_217.4 S3 ME3SA4**	**C614_217.4 S3 MX3SA4**	146	**C614_217.4 P90 BE90S4**	**C614_217.4 P90 BX90S4**	147
6.6	1485	2.7	215.8	35000	**C803_215.8 S3 ME3SA4**	**C803_215.8 S3 MX3SA4**	153	**C803_215.8 P90 BE90S4**	**C803_215.8 P90 BX90S4**	154
7.2	1362	2.8	197.9	35000	**C803_197.9 S3 ME3SA4**	**C803_197.9 S3 MX3SA4**	153	**C803_197.9 P90 BE90S4**	**C803_197.9 P90 BX90S4**	154
7.3	1304	1.2	195.8	16000	**C613_195.8 S3 ME3SA4**	**C613_195.8 S3 MX3SA4**	146	**C613_195.8 P90 BE90S4**	**C613_195.8 P90 BX90S4**	147
7.4	1336	1.7	194.1	25000	**C703_194.1 S3 ME3SA4**	**C703_194.1 S3 MX3SA4**	150	**C703_194.1 P90 BE90S4**	**C703_194.1 P90 BX90S4**	151
8.0	1233	1.9	179.2	25000	**C703_179.2 S3 ME3SA4**	**C703_179.2 S3 MX3SA4**	150	**C703_179.2 P90 BE90S4**	**C703_179.2 P90 BX90S4**	151
8.0	1189	1.3	178.6	16000	**C613_178.6 S3 ME3SA4**	**C613_178.6 S3 MX3SA4**	146	**C613_178.6 P90 BE90S4**	**C613_178.6 P90 BX90S4**	147
8.5	1163	3.4	169.0	35000	**C803_169.0 S3 ME3SA4**	**C803_169.0 S3 MX3SA4**	153	**C803_169.0 P90 BE90S4**	**C803_169.0 P90 BX90S4**	154
8.7	1095	1.5	164.5	16000	**C613_164.5 S3 ME3SA4**	**C613_164.5 S3 MX3SA4**	146	**C613_164.5 P90 BE90S4**	**C613_164.5 P90 BX90S4**	147
8.8	1121	2.1	162.8	25000	**C703_162.8 S3 ME3SA4**	**C703_162.8 S3 MX3SA4**	150	**C703_162.8 P90 BE90S4**	**C703_162.8 P90 BX90S4**	151
8.9	1105	0.9	160.5	10000	**C513_160.5 S3 ME3SA4**	**C513_160.5 S3 MX3SA4**	142	**C513_160.5 P90 BE90S4**	**C513_160.5 P90 BX90S4**	143
9.5	1034	2.2	150.3	25000	**C703_150.3 S3 ME3SA4**	**C703_150.3 S3 MX3SA4**	150	**C703_150.3 P90 BE90S4**	**C703_150.3 P90 BX90S4**	151
9.5	999	1.6	150.0	16000	**C613_150.0 S3 ME3SA4**	**C613_150.0 S3 MX3SA4**	146	**C613_150.0 P90 BE90S4**	**C613_150.0 P90 BX90S4**	147
9.7	1015	1.0	147.4	10000	**C513_147.4 S3 ME3SA4**	**C513_147.4 S3 MX3SA4**	142	**C513_147.4 P90 BE90S4**	**C513_147.4 P90 BX90S4**	143
10.2	935	1.7	140.5	16000	**C613_140.5 S3 ME3SA4**	**C613_140.5 S3 MX3SA4**	146	**C613_140.5 P90 BE90S4**	**C613_140.5 P90 BX90S4**	147
10.4	946	2.4	137.4	25000	**C703_137.4 S3 ME3SA4**	**C703_137.4 S3 MX3SA4**	150	**C703_137.4 P90 BE90S4**	**C703_137.4 P90 BX90S4**	151
10.6	926	1.1	134.6	10000	**C513_134.6 S3 ME3SA4**	**C513_134.6 S3 MX3SA4**	142	**C513_134.6 P90 BE90S4**	**C513_134.6 P90 BX90S4**	143
11.2	853	1.9	128.1	16000	**C613_128.1 S3 ME3SA4**	**C613_128.1 S3 MX3SA4**	146	**C613_128.1 P90 BE90S4**	**C613_128.1 P90 BX90S4**	147
11.3	873	2.6	126.8	25000	**C703_126.8 S3 ME3SA4**	**C703_126.8 S3 MX3SA4**	150	**C703_126.8 P90 BE90S4**	**C703_126.8 P90 BX90S4**	151
11.5	856	1.2	124.4	10000	**C513_124.4 S3 ME3SA4**	**C513_124.4 S3 MX3SA4**	142	**C513_124.4 P90 BE90S4**	**C513_124.4 P90 BX90S4**	143
12.6	757	2.1	113.6	16000	**C613_113.6 S3 ME3SA4**	**C613_113.6 S3 MX3SA4**	146	**C613_113.6 P90 BE90S4**	**C613_113.6 P90 BX90S4**	147
12.6	782	1.3	113.6	10000	**C513_113.6 S3 ME3SA4**	**C513_113.6 S3 MX3SA4**	142	**C513_113.6 P90 BE90S4**	**C513_113.6 P90 BX90S4**	143
12.7	774	3.0	112.4	25000	**C703_112.4 S3 ME3SA4**	**C703_112.4 S3 MX3SA4**	150	**C703_112.4 P90 BE90S4**	**C703_112.4 P90 BX90S4**	151
13.8	690	2.3	103.6	16000	**C613_103.6 S3 ME3SA4**	**C613_103.6 S3 MX3SA4**	146	**C613_103.6 P90 BE90S4**	**C613_103.6 P90 BX90S4**	147

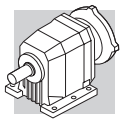

1.1 kW

n_2 min-1	M_2 Nm	S	i	R_{n2} N	IE2	IE3		IE2	IEC IE3	
14.0	701	1.4	101.8	10000	**C513_101.8 S3 ME3SA4**	**C513_101.8 S3 MX3SA4**	142	**C513_101.8 P90 BE90S4**	**C513_101.8 P90 BX90S4**	143
15.3	642	0.9	93.3	7000	**C413_93.3 S3 ME3SA4**	**C413_93.3 S3 MX3SA4**	138	**C413_93.3 P90 BE90S4**	**C413_93.3 P90 BX90S4**	139
15.4	640	1.6	93.0	10000	**C513_93.0 S3 ME3SA4**	**C513_93.0 S3 MX3SA4**	142	**C513_93.0 P90 BE90S4**	**C513_93.0 P90 BX90S4**	143
15.7	606	2.6	91.0	16000	**C613_91.0 S3 ME3SA4**	**C613_91.0 S3 MX3SA4**	146	**C613_91.0 P90 BE90S4**	**C613_91.0 P90 BX90S4**	147
17.2	553	2.9	83.0	16000	**C613_83.0 S3 ME3SA4**	**C613_83.0 S3 MX3SA4**	146	**C613_83.0 P90 BE90S4**	**C613_83.0 P90 BX90S4**	147
17.5	561	1.1	81.5	7000	**C413_81.5 S3 ME3SA4**	**C413_81.5 S3 MX3SA4**	138	**C413_81.5 P90 BE90S4**	**C413_81.5 P90 BX90S4**	139
17.9	550	1.8	79.9	10000	**C513_79.9 S3 ME3SA4**	**C513_79.9 S3 MX3SA4**	142	**C513_79.9 P90 BE90S4**	**C513_79.9 P90 BX90S4**	143
19.2	512	1.2	74.4	7000	**C413_74.4 S3 ME3SA4**	**C413_74.4 S3 MX3SA4**	138	**C413_74.4 P90 BE90S4**	**C413_74.4 P90 BX90S4**	139
19.3	494	3.2	74.2	16000	**C613_74.2 S3 ME3SA4**	**C613_74.2 S3 MX3SA4**	146	**C613_74.2 P90 BE90S4**	**C613_74.2 P90 BX90S4**	147
19.6	502	2.0	72.9	10000	**C513_72.9 S3 ME3SA4**	**C513_72.9 S3 MX3SA4**	142	**C513_72.9 P90 BE90S4**	**C513_72.9 P90 BX90S4**	143
20.2	487	0.9	70.8	6500	**C363_70.8 S3 ME3SA4**	**C363_70.8 S3 MX3SA4**	134	**C363_70.8 P90 BE90S4**	**C363_70.8 P90 BX90S4**	135
21.1	451	3.5	67.7	16000	**C613_67.7 S3 ME3SA4**	**C613_67.7 S3 MX3SA4**	146	**C613_67.7 P90 BE90S4**	**C613_67.7 P90 BX90S4**	147
22.1	445	2.2	64.6	10000	**C513_64.6 S3 ME3SA4**	**C513_64.6 S3 MX3SA4**	142	**C513_64.6 P90 BE90S4**	**C513_64.6 P90 BX90S4**	143
22.2	442	1.4	64.3	7000	**C413_64.3 S3 ME3SA4**	**C413_64.3 S3 MX3SA4**	138	**C413_64.3 P90 BE90S4**	**C413_64.3 P90 BX90S4**	139
23.1	427	1.1	62.0	6500	**C363_62.0 S3 ME3SA4**	**C363_62.0 S3 MX3SA4**	134	**C363_62.0 P90 BE90S4**	**C363_62.0 P90 BX90S4**	135
24.2	406	2.5	59.0	10000	**C513_59.0 S3 ME3SA4**	**C513_59.0 S3 MX3SA4**	142	**C513_59.0 P90 BE90S4**	**C513_59.0 P90 BX90S4**	143
24.4	404	1.5	58.7	7000	**C413_58.7 S3 ME3SA4**	**C413_58.7 S3 MX3SA4**	138	**C413_58.7 P90 BE90S4**	**C413_58.7 P90 BX90S4**	139
25.1	401	2.0	57.0	10000	**C512_57.0 S3 ME3SA4**	**C512_57.0 S3 MX3SA4**	142	**C512_57.0 P90 BE90S4**	**C512_57.0 P90 BX90S4**	143
25.5	387	1.2	56.2	6500	**C363_56.2 S3 ME3SA4**	**C363_56.2 S3 MX3SA4**	134	**C363_56.2 P90 BE90S4**	**C363_56.2 P90 BX90S4**	135
27.8	354	1.7	51.5	7000	**C413_51.5 S3 ME3SA4**	**C413_51.5 S3 MX3SA4**	138	**C413_51.5 P90 BE90S4**	**C413_51.5 P90 BX90S4**	139
27.8	361	1.9	51.4	10000	**C512_51.4 S3 ME3SA4**	**C512_51.4 S3 MX3SA4**	142	**C512_51.4 P90 BE90S4**	**C512_51.4 P90 BX90S4**	143
27.9	352	2.8	51.2	10000	**C513_51.2 S3 ME3SA4**	**C513_51.2 S3 MX3SA4**	142	**C513_51.2 P90 BE90S4**	**C513_51.2 P90 BX90S4**	143
29.7	331	1.4	48.2	6500	**C363_48.2 S3 ME3SA4**	**C363_48.2 S3 MX3SA4**	134	**C363_48.2 P90 BE90S4**	**C363_48.2 P90 BX90S4**	135
29.9	336	2.4	47.8	10000	**C512_47.8 S3 ME3SA4**	**C512_47.8 S3 MX3SA4**	142	**C512_47.8 P90 BE90S4**	**C512_47.8 P90 BX90S4**	143
30	323	1.9	47.0	7000	**C413_47.0 S3 ME3SA4**	**C413_47.0 S3 MX3SA4**	138	**C413_47.0 P90 BE90S4**	**C413_47.0 P90 BX90S4**	139
31	322	3.1	46.7	10000	**C513_46.7 S3 ME3SA4**	**C513_46.7 S3 MX3SA4**	142	**C513_46.7 P90 BE90S4**	**C513_46.7 P90 BX90S4**	143
32	318	0.9	45.3	5500	**C322_45.3 S3 ME3SA4**	**C322_45.3 S3 MX3SA4**	130	**C322_45.3 P90 BE90S4**	**C322_45.3 P90 BX90S4**	131
32	315	1.6	44.8	7000	**C412_44.8 S3 ME3SA4**	**C412_44.8 S3 MX3SA4**	138	**C412_44.8 P90 BE90S4**	**C412_44.8 P90 BX90S4**	139
33	299	1.5	43.5	6500	**C363_43.5 S3 ME3SA4**	**C363_43.5 S3 MX3SA4**	134	**C363_43.5 P90 BE90S4**	**C363_43.5 P90 BX90S4**	135
33	303	2.5	43.1	10000	**C512_43.1 S3 ME3SA4**	**C512_43.1 S3 MX3SA4**	142	**C512_43.1 P90 BE90S4**	**C512_43.1 P90 BX90S4**	143
35	286	1.0	40.7	5500	**C322_40.7 S3 ME3SA4**	**C322_40.7 S3 MX3SA4**	130	**C322_40.7 P90 BE90S4**	**C322_40.7 P90 BX90S4**	131
35	284	2.8	40.4	10000	**C512_40.4 S3 ME3SA4**	**C512_40.4 S3 MX3SA4**	142	**C512_40.4 P90 BE90S4**	**C512_40.4 P90 BX90S4**	143
35	278	2.2	40.3	7000	**C413_40.3 S3 ME3SA4**	**C413_40.3 S3 MX3SA4**	138	**C413_40.3 P90 BE90S4**	**C413_40.3 P90 BX90S4**	139
38	262	1.7	38.1	6500	**C363_38.1 S3 ME3SA4**	**C363_38.1 S3 MX3SA4**	134	**C363_38.1 P90 BE90S4**	**C363_38.1 P90 BX90S4**	135
39	261	1.9	37.1	7000	**C412_37.1 S3 ME3SA4**	**C412_37.1 S3 MX3SA4**	138	**C412_37.1 P90 BE90S4**	**C412_37.1 P90 BX90S4**	139
39	256	3.1	36.4	10000	**C512_36.4 S3 ME3SA4**	**C512_36.4 S3 MX3SA4**	142	**C512_36.4 P90 BE90S4**	**C512_36.4 P90 BX90S4**	143
40	254	1.2	36.1	5500	**C322_36.1 S3 ME3SA4**	**C322_36.1 S3 MX3SA4**	130	**C322_36.1 P90 BE90S4**	**C322_36.1 P90 BX90S4**	131
41	238	1.9	34.6	6300	**C363_34.6 S3 ME3SA4**	**C363_34.6 S3 MX3SA4**	134	**C363_34.6 P90 BE90S4**	**C363_34.6 P90 BX90S4**	135
43	235	2.1	33.4	7000	**C412_33.4 S3 ME3SA4**	**C412_33.4 S3 MX3SA4**	138	**C412_33.4 P90 BE90S4**	**C412_33.4 P90 BX90S4**	139
43	233	1.3	33.1	5420	**C322_33.1 S3 ME3SA4**	**C322_33.1 S3 MX3SA4**	130	**C322_33.1 P90 BE90S4**	**C322_33.1 P90 BX90S4**	131
45	221	2.3	31.4	7000	**C412_31.4 S3 ME3SA4**	**C412_31.4 S3 MX3SA4**	138	**C412_31.4 P90 BE90S4**	**C412_31.4 P90 BX90S4**	139
48	209	1.4	29.8	5360	**C322_29.8 S3 ME3SA4**	**C322_29.8 S3 MX3SA4**	130	**C322_29.8 P90 BE90S4**	**C322_29.8 P90 BX90S4**	131
48	208	1.0	29.6	3190	**C222_29.6 S3 ME3SA4**	**C222_29.6 S3 MX3SA4**	126	**C222_29.6 P90 BE90S4**	**C222_29.6 P90 BX90S4**	127
50	198	2.3	28.7	6190	**C363_28.7 S3 ME3SA4**	**C363_28.7 S3 MX3SA4**	134	**C363_28.7 P90 BE90S4**	**C363_28.7 P90 BX90S4**	135
51	199	2.5	28.3	7000	**C412_28.3 S3 ME3SA4**	**C412_28.3 S3 MX3SA4**	138	**C412_28.3 P90 BE90S4**	**C412_28.3 P90 BX90S4**	139
53	191	1.0	27.2	3160	**C222_27.2 S3 ME3SA4**	**C222_27.2 S3 MX3SA4**	126	**C222_27.2 P90 BE90S4**	**C222_27.2 P90 BX90S4**	127
53	189	1.6	26.9	5220	**C322_26.9 S3 ME3SA4**	**C322_26.9 S3 MX3SA4**	130	**C322_26.9 P90 BE90S4**	**C322_26.9 P90 BX90S4**	131
55	180	2.4	26.2	5930	**C363_26.2 S3 ME3SA4**	**C363_26.2 S3 MX3SA4**	134	**C363_26.2 P90 BE90S4**	**C363_26.2 P90 BX90S4**	135
57	177	1.7	25.1	5180	**C322_25.1 S3 ME3SA4**	**C322_25.1 S3 MX3SA4**	130	**C322_25.1 P90 BE90S4**	**C322_25.1 P90 BX90S4**	131
57	176	2.8	25.0	6950	**C412_25.0 S3 ME3SA4**	**C412_25.0 S3 MX3SA4**	138	**C412_25.0 P90 BE90S4**	**C412_25.0 P90 BX90S4**	139
59	171	1.2	24.3	3150	**C222_24.3 S3 ME3SA4**	**C222_24.3 S3 MX3SA4**	126	**C222_24.3 P90 BE90S4**	**C222_24.3 P90 BX90S4**	127
62	161	1.8	22.9	5050	**C322_22.9 S3 ME3SA4**	**C322_22.9 S3 MX3SA4**	130	**C322_22.9 P90 BE90S4**	**C322_22.9 P90 BX90S4**	131
63	159	3.2	22.6	6810	**C412_22.6 S3 ME3SA4**	**C412_22.6 S3 MX3SA4**	138	**C412_22.6 P90 BE90S4**	**C412_22.6 P90 BX90S4**	139
65	152	2.8	22.1	5680	**C363_22.1 S3 ME3SA4**	**C363_22.1 S3 MX3SA4**	134	**C363_22.1 P90 BE90S4**	**C363_22.1 P90 BX90S4**	135
67	151	1.3	21.5	3120	**C222_21.5 S3 ME3SA4**	**C222_21.5 S3 MX3SA4**	126	**C222_21.5 P90 BE90S4**	**C222_21.5 P90 BX90S4**	127
71	141	2.1	20.1	4920	**C322_20.1 S3 ME3SA4**	**C322_20.1 S3 MX3SA4**	130	**C322_20.1 P90 BE90S4**	**C322_20.1 P90 BX90S4**	131
71	141	1.3	20.0	3080	**C222_20.0 S3 ME3SA4**	**C222_20.0 S3 MX3SA4**	126	**C222_20.0 P90 BE90S4**	**C222_20.0 P90 BX90S4**	127
75	134	2.8	19.0	5580	**C362_19.0 S3 ME3SA4**	**C362_19.0 S3 MX3SA4**	134	**C362_19.0 P90 BE90S4**	**C362_19.0 P90 BX90S4**	135
79	128	2.2	18.2	4760	**C322_18.2 S3 ME3SA4**	**C322_18.2 S3 MX3SA4**	130	**C322_18.2 P90 BE90S4**	**C322_18.2 P90 BX90S4**	131
79	127	1.4	18.1	3020	**C222_18.1 S3 ME3SA4**	**C222_18.1 S3 MX3SA4**	126	**C222_18.1 P90 BE90S4**	**C222_18.1 P90 BX90S4**	127
83	121	3.1	17.2	5300	**C362_17.2 S3 ME3SA4**	**C362_17.2 S3 MX3SA4**	134	**C362_17.2 P90 BE90S4**	**C362_17.2 P90 BX90S4**	135
90	111	1.6	15.8	2970	**C222_15.8 S3 ME3SA4**	**C222_15.8 S3 MX3SA4**	126	**C222_15.8 P90 BE90S4**	**C222_15.8 P90 BX90S4**	127
92	110	2.5	15.6	4630	**C322_15.6 S3 ME3SA4**	**C322_15.6 S3 MX3SA4**	130	**C322_15.6 P90 BE90S4**	**C322_15.6 P90 BX90S4**	131
98	102	1.6	14.5	2940	**C222_14.5 S3 ME3SA4**	**C222_14.5 S3 MX3SA4**	126	**C222_14.5 P90 BE90S4**	**C222_14.5 P90 BX90S4**	127
102	99	2.5	14.1	4480	**C322_14.1 S3 ME3SA4**	**C322_14.1 S3 MX3SA4**	130	**C322_14.1 P90 BE90S4**	**C322_14.1 P90 BX90S4**	131

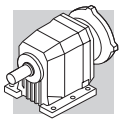

1.1 kW

n_2	M_2	S	i	R_{n2}	IE2	IE3		IE2	IE3	
min-1	Nm			N						
115	87	1.8	12.4	2840	**C222_12.4 S3 ME3SA4**	**C222_12.4 S3 MX3SA4**	126	**C222_12.4 P90 BE90S4**	**C222_12.4 P90 BX90S4**	127
116	87	2.8	12.3	4350	**C322_12.3 S3 ME3SA4**	**C322_12.3 S3 MX3SA4**	130	**C322_12.3 P90 BE90S4**	**C322_12.3 P90 BX90S4**	131
128	79	2.9	11.2	4200	**C322_11.2 S3 ME3SA4**	**C322_11.2 S3 MX3SA4**	130	**C322_11.2 P90 BE90S4**	**C322_11.2 P90 BX90S4**	131
129	78	2.0	11.1	2800	**C222_11.1 S3 ME3SA4**	**C222_11.1 S3 MX3SA4**	126	**C222_11.1 P90 BE90S4**	**C222_11.1 P90 BX90S4**	127
142	71	0.9	10.1	1400	**C122_10.1 S3 ME3SA4**	**C122_10.1 S3 MX3SA4**	122	**C122_10.1 P90 BE90S4**	**C122_10.1 P90 BX90S4**	123
148	68	2.1	9.6	2700	**C222_9.6 S3 ME3SA4**	**C222_9.6 S3 MX3SA4**	126	**C222_9.6 P90 BE90S4**	**C222_9.6 P90 BX90S4**	127
154	65	3.4	9.3	4030	**C322_6.3 S3 ME3SA4**	**C322_6.3 S3 MX3SA4**	130	**C322_6.3 P90 BE90S4**	**C322_6.3 P90 BX90S4**	131
162	62	1.0	8.8	1560	**C122_8.8 S3 ME3SA4**	**C122_8.8 S3 MX3SA4**	122	**C122_8.8 P90 BE90S4**	**C122_8.8 P90 BX90S4**	123
165	61	2.3	8.7	2630	**C222_8.7 S3 ME3SA4**	**C222_8.7 S3 MX3SA4**	126	**C222_8.7 P90 BE90S4**	**C222_8.7 P90 BX90S4**	127
188	54	1.0	7.6	1550	**C122_7.6 S3 ME3SA4**	**C122_7.6 S3 MX3SA4**	122	**C122_7.6 P90 BE90S4**	**C122_7.6 P90 BX90S4**	123
202	50	2.6	7.1	2510	**C222_7.1 S3 ME3SA4**	**C222_7.1 S3 MX3SA4**	126	**C222_7.1 P90 BE90S4**	**C222_7.1 P90 BX90S4**	127
229	44	1.2	6.2	1220	**C122_6.2 S3 ME3SA4**	**C122_6.2 S3 MX3SA4**	122	**C122_6.2 P90 BE90S4**	**C122_6.2 P90 BX90S4**	123
235	43	2.5	6.1	2380	**C222_6.1 S3 ME3SA4**	**C222_6.1 S3 MX3SA4**	126	**C222_6.1 P90 BE90S4**	**C222_6.1 P90 BX90S4**	127
238	42	1.6	11.9	1420	**C122_11.9 S2 ME2SB2**		122	**C122_11.9 P80 BE80B2**		123
255	39	3.9	11.1	2980	**C222_11.1 S2 ME2SB2**		126	**C222_11.1 P80 BE80B2**		127
255	39	1.3	5.6	1270	**C122_5.6 S3 ME3SA4**	**C122_5.6 S3 MX3SA4**	122	**C122_5.6 P90 BE90S4**	**C122_5.6 P90 BX90S4**	123
256	39	2.6	5.6	2350	**C222_5.6 S3 ME3SA4**	**C222_5.6 S3 MX3SA4**	126	**C222_5.6 P90 BE90S4**	**C222_5.6 P90 BX90S4**	127
259	39	1.1	3.7	1320	**C122_3.7 S3 ME3LA6**		122	**C122_3.7 P100 BE100M6**		123
281	35	1.8	10.1	1420	**C122_10.1 S2 ME2SB2**		122	**C122_10.1 P80 BE80B2**		123
294	34	1.4	4.9	1370	**C122_4.9 S3 ME3SA4**	**C122_4.9 S3 MX3SA4**	122	**C122_4.9 P90 BE90S4**	**C122_4.9 P90 BX90S4**	123
300	34	3.0	4.8	2240	**C222_4.8 S3 ME3SA4**	**C222_4.8 S3 MX3SA4**	126	**C222_4.8 P90 BE90S4**	**C222_4.8 P90 BX90S4**	127
320	31	1.9	8.8	1370	**C122_8.8 S2 ME2SB2**		122	**C122_8.8 P80 BE80B2**		123
332	30	1.5	4.3	1320	**C122_4.3 S3 ME3SA4**	**C122_4.3 S3 MX3SA4**	122	**C122_4.3 P90 BE90S4**	**C122_4.3 P90 BX90S4**	123
336	30	3.1	4.3	2200	**C222_4.3 S3 ME3SA4**	**C222_4.3 S3 MX3SA4**	126	**C222_4.3 P90 BE90S4**	**C222_4.3 P90 BX90S4**	127
341	29	1.3	2.8	1320	**C122_2.8 S3 M3SA6**		122	**C122_2.8 P90 BN90L6**		123
347	29	2.8	2.7	2160	**C222_2.7 S3 M3SA6**		126	**C222_2.7 P90 BN90L6**		127
371	27	2.1	7.6	1330	**C122_7.6 S2 ME2SB2**		122	**C122_7.6 P80 BE80B2**		123
386	26	3.5	3.7	2090	**C222_3.7 S3 ME3SA4**	**C222_3.7 S3 MX3SA4**	126	**C222_3.7 P90 BE90S4**	**C222_3.7 P90 BX90S4**	127
392	26	1.6	3.7	1280	**C122_3.7 S3 ME3SA4**	**C122_3.7 S3 MX3SA4**	122	**C122_3.7 P90 BE90S4**	**C122_3.7 P90 BX90S4**	123
446	23	1.8	3.2	1230	**C122_3.2 S3 ME3SA4**	**C122_3.2 S3 MX3SA4**	122	**C122_3.2 P90 BE90S4**	**C122_3.2 P90 BX90S4**	123
454	22	2.4	6.2	1230	**C122_6.2 S2 ME2SB2**		122	**C122_6.2 P80 BE80B2**		123
505	20	2.6	5.6	1190	**C122_5.6 S2 ME2SB2**		122	**C122_5.6 P80 BE80B2**		123
517	19	1.9	2.8	1190	**C122_2.8 S3 ME3SA4**	**C122_2.8 S3 MX3SA4**	122	**C122_2.8 P90 BE90S4**	**C122_2.8 P90 BX90S4**	123
581	17	2.8	4.9	1150	**C122_4.9 S2 ME2SB2**		122	**C122_4.9 P80 BE80B2**		123
656	15	3.0	4.3	1110	**C122_4.3 S2 ME2SB2**		122	**C122_4.3 P80 BE80B2**		123
775	13	3.3	3.7	1070	**C122_3.7 S2 ME2SB2**		122	**C122_3.7 P80 BE80B2**		123
882	11	3.5	3.2	1020	**C122_3.2 S2 ME2SB2**		122	**C122_3.2 P80 BE80B2**		123
1023	10	3.8	2.8	980	**C122_2.8 S2 ME2SB2**		122	**C122_2.8 P80 BE80B2**		123

1.5 kW

n_2	M_2	S	i	R_{n2}	IE2	IE3		IE2	IE3	
min-1	Nm			N						
1.0	12390	1.0	908.2	85000	**C1004_908.2 S3 ME3LB6**		159	**C1004_908.2 P100 BE100LA6**		160
1.3	9730	1.2	1081	85000	**C1004_1081 S3 ME3SB4**	**C1004_1081 S3 MX3SB4**	159	**C1004_1081 P90 BE90LA4**	**C1004_1081 P90 BX90LA4**	160
1.4	9035	1.3	1004	85000	**C1004_1004 S3 ME3SB4**	**C1004_1004 S3 MX3SB4**	159	**C1004_1004 P90 BE90LA4**	**C1004_1004 P90 BX90LA4**	160
1.6	8174	1.5	908.2	85000	**C1004_908.2 S3 ME3SB4**	**C1004_908.2 S3 MX3SB4**	159	**C1004_908.2 P90 BE90LA4**	**C1004_908.2 P90 BX90LA4**	160
1.7	7596	0.9	844.0	60000	**C904_844.0 S3 ME3SB4**	**C904_844.0 S3 MX3SB4**	156	**C904_844.0 P90 BE90LA4**	**C904_844.0 P90 BX90LA4**	157
1.7	7590	1.6	843.3	85000	**C1004_843.3 S3 ME3SB4**	**C1004_843.3 S3 MX3SB4**	159	**C1004_843.3 P90 BE90LA4**	**C1004_843.3 P90 BX90LA4**	160
1.8	6981	1.7	775.7	85000	**C1004_775.7 S3 ME3SB4**	**C1004_775.7 S3 MX3SB4**	159	**C1004_775.7 P90 BE90LA4**	**C1004_775.7 P90 BX90LA4**	160
1.8	6963	1.0	773.6	60000	**C904_773.6 S3 ME3SB4**	**C904_773.6 S3 MX3SB4**	156	**C904_773.6 P90 BE90LA4**	**C904_773.6 P90 BX90LA4**	157
2.0	6483	1.9	720.3	85000	**C1004_720.3 S3 ME3SB4**	**C1004_720.3 S3 MX3SB4**	159	**C1004_720.3 P90 BE90LA4**	**C1004_720.3 P90 BX90LA4**	160
2.0	6410	1.1	712.2	60000	**C904_712.2 S3 ME3SB4**	**C904_712.2 S3 MX3SB4**	156	**C904_712.2 P90 BE90LA4**	**C904_712.2 P90 BX90LA4**	157
2.2	5875	1.2	652.8	60000	**C904_652.8 S3 ME3SB4**	**C904_652.8 S3 MX3SB4**	156	**C904_652.8 P90 BE90LA4**	**C904_652.8 P90 BX90LA4**	157
2.3	5647	2.1	627.4	85000	**C1004_627.4 S3 ME3SB4**	**C1004_627.4 S3 MX3SB4**	159	**C1004_627.4 P90 BE90LA4**	**C1004_627.4 P90 BX90LA4**	160
2.5	5245	1.4	582.8	60000	**C904_582.8 S3 ME3SB4**	**C904_582.8 S3 MX3SB4**	156	**C904_582.8 P90 BE90LA4**	**C904_582.8 P90 BX90LA4**	157
2.5	5243	2.3	582.6	85000	**C1004_582.6 S3 ME3SB4**	**C1004_582.6 S3 MX3SB4**	159	**C1004_582.6 P90 BE90LA4**	**C1004_582.6 P90 BX90LA4**	160
2.7	4808	1.5	534.2	60000	**C904_534.2 S3 ME3SB4**	**C904_534.2 S3 MX3SB4**	156	**C904_534.2 P90 BE90LA4**	**C904_534.2 P90 BX90LA4**	157
2.8	4524	2.7	502.6	85000	**C1004_502.6 S3 ME3SB4**	**C1004_502.6 S3 MX3SB4**	159	**C1004_502.6 P90 BE90LA4**	**C1004_502.6 P90 BX90LA4**	160
3.1	4201	2.9	466.7	85000	**C1004_466.7 S3 ME3SB4**	**C1004_466.7 S3 MX3SB4**	159	**C1004_466.7 P90 BE90LA4**	**C1004_466.7 P90 BX90LA4**	160

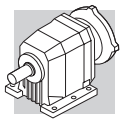

1.5 kW

n_2 min-1	M_2 Nm	S	i	R_{n2} N	IE2	IE3		IEC IE2	IEC IE3	
3.1	4114	1.8	457.1	60000	**C904_457.1 S3 ME3SB4**	**C904_457.1 S3 MX3SB4**	156	**C904_457.1 P90 BE90LA4**	**C904_457.1 P90 BX90LA4**	157
3.1	4099	1.0	455.4	35000	**C804_455.4 S3 ME3SB4**	**C804_455.4 S3 MX3SB4**	153	**C804_455.4 P90 BE90LA4**	**C804_455.4 P90 BX90LA4**	154
3.4	3771	1.9	419.0	60000	**C904_419.0 S3 ME3SB4**	**C904_419.0 S3 MX3SB4**	156	**C904_419.0 P90 BE90LA4**	**C904_419.0 P90 BX90LA4**	157
3.4	3757	1.1	417.5	35000	**C804_417.5 S3 ME3SB4**	**C804_417.5 S3 MX3SB4**	153	**C804_417.5 P90 BE90LA4**	**C804_417.5 P90 BX90LA4**	154
3.9	3328	2.2	369.8	60000	**C904_369.8 S3 ME3SB4**	**C904_369.8 S3 MX3SB4**	156	**C904_369.8 P90 BE90LA4**	**C904_369.8 P90 BX90LA4**	157
3.9	3282	1.2	364.7	35000	**C804_364.7 S3 ME3SB4**	**C804_364.7 S3 MX3SB4**	153	**C804_364.7 P90 BE90LA4**	**C804_364.7 P90 BX90LA4**	154
4.2	3051	2.4	339.0	60000	**C904_339.0 S3 ME3SB4**	**C904_339.0 S3 MX3SB4**	156	**C904_339.0 P90 BE90LA4**	**C904_339.0 P90 BX90LA4**	157
4.3	3008	1.3	334.3	35000	**C804_334.3 S3 ME3SB4**	**C804_334.3 S3 MX3SB4**	153	**C804_334.3 P90 BE90LA4**	**C804_334.3 P90 BX90LA4**	154
4.9	2636	2.7	292.9	60000	**C904_292.9 S3 ME3SB4**	**C904_292.9 S3 MX3SB4**	156	**C904_292.9 P90 BE90LA4**	**C904_292.9 P90 BX90LA4**	157
5.0	2571	1.6	285.7	35000	**C804_285.7 S3 ME3SB4**	**C804_285.7 S3 MX3SB4**	153	**C804_285.7 P90 BE90LA4**	**C804_285.7 P90 BX90LA4**	154
5.3	2450	0.9	272.2	25000	**C704_272.2 S3 ME3SB4**	**C704_272.2 S3 MX3SB4**	150	**C704_272.2 P90 BE90LA4**	**C704_272.2 P90 BX90LA4**	151
5.3	2416	3.0	268.5	60000	**C904_268.5 S3 ME3SB4**	**C904_268.5 S3 MX3SB4**	156	**C904_268.5 P90 BE90LA4**	**C904_268.5 P90 BX90LA4**	157
5.5	2357	1.7	261.9	35000	**C804_261.9 S3 ME3SB4**	**C804_261.9 S3 MX3SB4**	153	**C804_261.9 P90 BE90LA4**	**C804_261.9 P90 BX90LA4**	154
5.7	2262	1.0	251.3	25000	**C704_251.3 S3 ME3SB4**	**C704_251.3 S3 MX3SB4**	150	**C704_251.3 P90 BE90LA4**	**C704_251.3 P90 BX90LA4**	151
6.0	2226	1.0	239.3	25000	**C703_239.3 S3 ME3SB4**	**C703_239.3 S3 MX3SB4**	150	**C703_239.3 P90 BE90LA4**	**C703_239.3 P90 BX90LA4**	151
6.5	2054	1.1	220.9	25000	**C703_220.9 S3 ME3SB4**	**C703_220.9 S3 MX3SB4**	150	**C703_220.9 P90 BE90LA4**	**C703_220.9 P90 BX90LA4**	151
6.6	1957	0.8	217.4	16000	**C614_217.4 S3 ME3SB4**	**C614_217.4 S3 MX3SB4**	146	**C614_217.4 P90 BE90LA4**	**C614_217.4 P90 BX90LA4**	147
6.6	2007	2.0	215.8	35000	**C803_215.8 S3 ME3SB4**	**C803_215.8 S3 MX3SB4**	153	**C803_215.8 P90 BE90LA4**	**C803_215.8 P90 BX90LA4**	154
7.2	1840	2.1	197.9	35000	**C803_197.9 S3 ME3SB4**	**C803_197.9 S3 MX3SB4**	153	**C803_197.9 P90 BE90LA4**	**C803_197.9 P90 BX90LA4**	154
7.3	1762	0.9	195.8	16000	**C613_195.8 S3 ME3SB4**	**C613_195.8 S3 MX3SB4**	146	**C613_195.8 P90 BE90LA4**	**C613_195.8 P90 BX90LA4**	147
7.4	1805	1.3	194.1	25000	**C703_194.1 S3 ME3SB4**	**C703_194.1 S3 MX3SB4**	150	**C703_194.1 P90 BE90LA4**	**C703_194.1 P90 BX90LA4**	151
7.8	1715	2.3	184.4	35000	**C803_184.4 S3 ME3SB4**	**C803_184.4 S3 MX3SB4**	153	**C803_184.4 P90 BE90LA4**	**C803_184.4 P90 BX90LA4**	154
8.0	1666	1.4	179.2	25000	**C703_179.2 S3 ME3SB4**	**C703_179.2 S3 MX3SB4**	150	**C703_179.2 P90 BE90LA4**	**C703_179.2 P90 BX90LA4**	151
8.0	1607	1.0	178.6	16000	**C613_178.6 S3 ME3SB4**	**C613_178.6 S3 MX3SB4**	146	**C613_178.6 P90 BE90LA4**	**C613_178.6 P90 BX90LA4**	147
8.5	1572	2.5	169.0	35000	**C803_169.0 S3 ME3SB4**	**C803_169.0 S3 MX3SB4**	153	**C803_169.0 P90 BE90LA4**	**C803_169.0 P90 BX90LA4**	154
8.7	1480	1.1	164.5	16000	**C613_164.5 S3 ME3SB4**	**C613_164.5 S3 MX3SB4**	146	**C613_164.5 P90 BE90LA4**	**C613_164.5 P90 BX90LA4**	147
8.8	1514	1.5	162.8	25000	**C703_162.8 S3 ME3SB4**	**C703_162.8 S3 MX3SB4**	150	**C703_162.8 P90 BE90LA4**	**C703_162.8 P90 BX90LA4**	151
9.5	1398	1.6	150.3	25000	**C703_150.3 S3 ME3SB4**	**C703_150.3 S3 MX3SB4**	150	**C703_150.3 P90 BE90LA4**	**C703_150.3 P90 BX90LA4**	151
9.5	1350	1.2	150.0	16000	**C613_150.0 S3 ME3SB4**	**C613_150.0 S3 MX3SB4**	146	**C613_150.0 P90 BE90LA4**	**C613_150.0 P90 BX90LA4**	147
9.6	1387	2.9	149.1	35000	**C803_149.1 S3 ME3SB4**	**C803_149.1 S3 MX3SB4**	153	**C803_149.1 P90 BE90LA4**	**C803_149.1 P90 BX90LA4**	154
10.2	1264	1.3	140.5	16000	**C613_140.5 S3 ME3SB4**	**C613_140.5 S3 MX3SB4**	146	**C613_140.5 P90 BE90LA4**	**C613_140.5 P90 BX90LA4**	147
10.4	1278	1.8	137.4	25000	**C703_137.4 S3 ME3SB4**	**C703_137.4 S3 MX3SB4**	150	**C703_137.4 P90 BE90LA4**	**C703_137.4 P90 BX90LA4**	151
10.5	1271	3.1	136.7	35000	**C803_136.7 S3 ME3SB4**	**C803_136.7 S3 MX3SB4**	153	**C803_136.7 P90 BE90LA4**	**C803_136.7 P90 BX90LA4**	154
11.2	1153	1.4	128.1	16000	**C613_128.1 S3 ME3SB4**	**C613_128.1 S3 MX3SB4**	146	**C613_128.1 P90 BE90LA4**	**C613_128.1 P90 BX90LA4**	147
11.3	1180	1.9	126.8	25000	**C703_126.8 S3 ME3SB4**	**C703_126.8 S3 MX3SB4**	150	**C703_126.8 P90 BE90LA4**	**C703_126.8 P90 BX90LA4**	151
12.6	1022	1.6	113.6	16000	**C613_113.6 S3 ME3SB4**	**C613_113.6 S3 MX3SB4**	146	**C613_113.6 P90 BE90LA4**	**C613_113.6 P90 BX90LA4**	147
12.6	1057	0.9	113.6	10000	**C513_113.6 S3 ME3SB4**	**C513_113.6 S3 MX3SB4**	142	**C513_113.6 P90 BE90LA4**	**C513_113.6 P90 BX90LA4**	143
12.7	1046	2.2	112.4	25000	**C703_112.4 S3 ME3SB4**	**C703_112.4 S3 MX3SB4**	150	**C703_112.4 P90 BE90LA4**	**C703_112.4 P90 BX90LA4**	151
13.8	965	2.4	103.8	25000	**C703_103.8 S3 ME3SB4**	**C703_103.8 S3 MX3SB4**	150	**C703_103.8 P90 BE90LA4**	**C703_103.8 P90 BX90LA4**	151
13.8	933	1.7	103.6	16000	**C613_103.6 S3 ME3SB4**	**C613_103.6 S3 MX3SB4**	146	**C613_103.6 P90 BE90LA4**	**C613_103.6 P90 BX90LA4**	147
14.0	947	1.1	101.8	10000	**C513_101.8 S3 ME3SB4**	**C513_101.8 S3 MX3SB4**	142	**C513_101.8 P90 BE90LA4**	**C513_101.8 P90 BX90LA4**	143
15.4	865	1.2	93.0	10000	**C513_93.0 S3 ME3SB4**	**C513_93.0 S3 MX3SB4**	142	**C513_93.0 P90 BE90LA4**	**C513_93.0 P90 BX90LA4**	143
15.7	819	2.0	91.0	16000	**C613_91.0 S3 ME3SB4**	**C613_91.0 S3 MX3SB4**	146	**C613_91.0 P90 BE90LA4**	**C613_91.0 P90 BX90LA4**	147
16.2	820	2.8	88.2	25000	**C703_88.2 S3 ME3SB4**	**C703_88.2 S3 MX3SB4**	150	**C703_88.2 P90 BE90LA4**	**C703_88.2 P90 BX90LA4**	151
16.6	821	1.0	57.0	10000	**C512_57.0 S3 ME3LB6**		142	**C512_57.0 P100 BE100LA6**		143
17.2	747	2.1	83.0	16000	**C613_83.0 S3 ME3SB4**	**C613_83.0 S3 MX3SB4**	146	**C613_83.0 P90 BE90LA4**	**C613_83.0 P90 BX90LA4**	147
17.6	757	3.0	81.4	25000	**C703_81.4 S3 ME3SB4**	**C703_81.4 S3 MX3SB4**	150	**C703_81.4 P90 BE90LA4**	**C703_81.4 P90 BX90LA4**	151
17.9	743	1.3	79.9	10000	**C513_79.9 S3 ME3SB4**	**C513_79.9 S3 MX3SB4**	142	**C513_79.9 P90 BE90LA4**	**C513_79.9 P90 BX90LA4**	143
18.4	740	0.9	51.4	10000	**C512_51.4 S3 ME3LB6**		142	**C512_51.4 P100 BE100LA6**		143
19.3	668	2.4	74.2	16000	**C613_74.2 S3 ME3SB4**	**C613_74.2 S3 MX3SB4**	146	**C613_74.2 P90 BE90LA4**	**C613_74.2 P90 BX90LA4**	147
19.6	678	1.5	72.9	10000	**C513_72.9 S3 ME3SB4**	**C513_72.9 S3 MX3SB4**	142	**C513_72.9 P90 BE90LA4**	**C513_72.9 P90 BX90LA4**	143
19.8	689	1.2	47.8	10000	**C512_47.8 S3 ME3LB6**		142	**C512_47.8 P100 BE100LA6**		143
20.0	663	3.5	71.3	25000	**C703_71.3 S3 ME3SB4**	**C703_71.3 S3 MX3SB4**	150	**C703_71.3 P90 BE90LA4**	**C703_71.3 P90 BX90LA4**	151
21.1	609	2.6	67.7	16000	**C613_67.7 S3 ME3SB4**	**C613_67.7 S3 MX3SB4**	146	**C613_67.7 P90 BE90LA4**	**C613_67.7 P90 BX90LA4**	147
21.9	621	1.2	43.1	10000	**C512_43.1 S3 ME3LB6**		142	**C512_43.1 P100 BE100LA6**		143
22.1	601	1.7	64.6	10000	**C513_64.6 S3 ME3SB4**	**C513_64.6 S3 MX3SB4**	142	**C513_64.6 P90 BE90LA4**	**C513_64.6 P90 BX90LA4**	143
22.2	598	1.0	64.3	7000	**C413_64.3 S3 ME3SB4**	**C413_64.3 S3 MX3SB4**	138	**C413_64.3 P90 BE90LA4**	**C413_64.3 P90 BX90LA4**	139
24.2	549	1.8	59.0	10000	**C513_59.0 S3 ME3SB4**	**C513_59.0 S3 MX3SB4**	142	**C513_59.0 P90 BE90LA4**	**C513_59.0 P90 BX90LA4**	143
24.4	545	1.1	58.7	7000	**C413_58.7 S3 ME3SB4**	**C413_58.7 S3 MX3SB4**	138	**C413_58.7 P90 BE90LA4**	**C413_58.7 P90 BX90LA4**	139
24.4	527	3.0	58.6	16000	**C613_58.6 S3 ME3SB4**	**C613_58.6 S3 MX3SB4**	146	**C613_58.6 P90 BE90LA4**	**C613_58.6 P90 BX90LA4**	147
25.1	542	1.4	57.0	10000	**C512_57.0 S3 ME3SB4**	**C512_57.0 S3 MX3SB4**	142	**C512_57.0 P90 BE90LA4**	**C512_57.0 P90 BX90LA4**	143
26.7	481	3.3	53.5	16000	**C613_53.5 S3 ME3SB4**	**C613_53.5 S3 MX3SB4**	146	**C613_53.5 P90 BE90LA4**	**C613_53.5 P90 BX90LA4**	147
27.8	479	1.3	51.5	7000	**C413_51.5 S3 ME3SB4**	**C413_51.5 S3 MX3SB4**	138	**C413_51.5 P90 BE90LA4**	**C413_51.5 P90 BX90LA4**	139
27.8	488	1.4	51.4	10000	**C512_51.4 S3 ME3SB4**	**C512_51.4 S3 MX3SB4**	142	**C512_51.4 P90 BE90LA4**	**C512_51.4 P90 BX90LA4**	143
27.9	476	2.1	51.2	10000	**C513_51.2 S3 ME3SB4**	**C513_51.2 S3 MX3SB4**	142	**C513_51.2 P90 BE90LA4**	**C513_51.2 P90 BX90LA4**	143

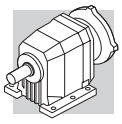

1.5 kW

n_2	M_2	S	i	R_{n2}	IE2	IE3		IE2	IEC IE3	
min-1	Nm			N						
29.7	448	1.0	48.2	6290	**C363_48.2 S3 ME3SB4**	**C363_48.2 S3 MX3SB4**	134	**C363_48.2 P90 BE90LA4**	**C363_48.2 P90 BX90LA4**	135
29.9	454	1.8	47.8	10000	**C512_47.8 S3 ME3SB4**	**C512_47.8 S3 MX3SB4**	142	**C512_47.8 P90 BE90LA4**	**C512_47.8 P90 BX90LA4**	143
30	437	1.4	47.0	7000	**C413_47.0 S3 ME3SB4**	**C413_47.0 S3 MX3SB4**	138	**C413_47.0 P90 BE90LA4**	**C413_47.0 P90 BX90LA4**	139
31	435	2.3	46.7	10000	**C513_46.7 S3 ME3SB4**	**C513_46.7 S3 MX3SB4**	142	**C513_46.7 P90 BE90LA4**	**C513_46.7 P90 BX90LA4**	143
32	425	1.2	44.8	7000	**C412_44.8 S3 ME3SB4**	**C412_44.8 S3 MX3SB4**	138	**C412_44.8 P90 BE90LA4**	**C412_44.8 P90 BX90LA4**	139
33	404	1.1	43.5	6110	**C363_43.5 S3 ME3SB4**	**C363_43.5 S3 MX3SB4**	134	**C363_43.5 P90 BE90LA4**	**C363_43.5 P90 BX90LA4**	135
33	410	1.9	43.1	10000	**C512_43.1 S3 ME3SB4**	**C512_43.1 S3 MX3SB4**	142	**C512_43.1 P90 BE90LA4**	**C512_43.1 P90 BX90LA4**	143
35	376	2.7	40.5	10000	**C513_40.5 S3 ME3SB4**	**C513_40.5 S3 MX3SB4**	142	**C513_40.5 P90 BE90LA4**	**C513_40.5 P90 BX90LA4**	143
35	383	2.1	40.4	10000	**C512_40.4 S3 ME3SB4**	**C512_40.4 S3 MX3SB4**	142	**C512_40.4 P90 BE90LA4**	**C512_40.4 P90 BX90LA4**	143
35	375	1.6	40.3	7000	**C413_40.3 S3 ME3SB4**	**C413_40.3 S3 MX3SB4**	138	**C413_40.3 P90 BE90LA4**	**C413_40.3 P90 BX90LA4**	139
38	354	1.3	38.1	6110	**C363_38.1 S3 ME3SB4**	**C363_38.1 S3 MX3SB4**	134	**C363_38.1 P90 BE90LA4**	**C363_38.1 P90 BX90LA4**	135
39	352	1.4	37.1	7000	**C412_37.1 S3 ME3SB4**	**C412_37.1 S3 MX3SB4**	138	**C412_37.1 P90 BE90LA4**	**C412_37.1 P90 BX90LA4**	139
39	344	2.9	37.0	10000	**C513_37.0 S3 ME3SB4**	**C513_37.0 S3 MX3SB4**	142	**C513_37.0 P90 BE90LA4**	**C513_37.0 P90 BX90LA4**	143
39	346	2.3	36.4	10000	**C512_36.4 S3 ME3SB4**	**C512_36.4 S3 MX3SB4**	142	**C512_36.4 P90 BE90LA4**	**C512_36.4 P90 BX90LA4**	143
40	343	0.9	36.1	5100	**C322_36.1 S3 ME3SB4**	**C322_36.1 S3 MX3SB4**	130	**C322_36.1 P90 BE90LA4**	**C322_36.1 P90 BX90LA4**	131
41	322	1.4	34.6	5950	**C363_34.6 S3 ME3SB4**	**C363_34.6 S3 MX3SB4**	134	**C363_34.6 P90 BE90LA4**	**C363_34.6 P90 BX90LA4**	135
43	317	1.6	33.4	7000	**C412_33.4 S3 ME3SB4**	**C412_33.4 S3 MX3SB4**	138	**C412_33.4 P90 BE90LA4**	**C412_33.4 P90 BX90LA4**	139
43	314	1.0	33.1	5050	**C322_33.1 S3 ME3SB4**	**C322_33.1 S3 MX3SB4**	130	**C322_33.1 P90 BE90LA4**	**C322_33.1 P90 BX90LA4**	131
43	314	2.5	33.0	10000	**C512_33.0 S3 ME3SB4**	**C512_33.0 S3 MX3SB4**	142	**C512_33.0 P90 BE90LA4**	**C512_33.0 P90 BX90LA4**	143
45	299	1.7	31.4	6990	**C412_31.4 S3 ME3SB4**	**C412_31.4 S3 MX3SB4**	138	**C412_31.4 P90 BE90LA4**	**C412_31.4 P90 BX90LA4**	139
48	283	2.8	29.8	10000	**C512_29.8 S3 ME3SB4**	**C512_29.8 S3 MX3SB4**	142	**C512_29.8 P90 BE90LA4**	**C512_29.8 P90 BX90LA4**	143
48	283	1.1	29.8	4970	**C322_29.8 S3 ME3SB4**	**C322_29.8 S3 MX3SB4**	130	**C322_29.8 P90 BE90LA4**	**C322_29.8 P90 BX90LA4**	131
50	267	1.7	28.7	5830	**C363_28.7 S3 ME3SB4**	**C363_28.7 S3 MX3SB4**	134	**C363_28.7 P90 BE90LA4**	**C363_28.7 P90 BX90LA4**	135
51	269	1.9	28.3	6830	**C412_28.3 S3 ME3SB4**	**C412_28.3 S3 MX3SB4**	138	**C412_28.3 P90 BE90LA4**	**C412_28.3 P90 BX90LA4**	139
53	256	1.2	26.9	4890	**C322_26.9 S3 ME3SB4**	**C322_26.9 S3 MX3SB4**	130	**C322_26.9 P90 BE90LA4**	**C322_26.9 P90 BX90LA4**	131
55	244	1.8	26.2	5710	**C363_26.2 S3 ME3SB4**	**C363_26.2 S3 MX3SB4**	134	**C363_26.2 P90 BE90LA4**	**C363_26.2 P90 BX90LA4**	135
55	246	3.2	25.9	10000	**C512_25.9 S3 ME3SB4**	**C512_25.9 S3 MX3SB4**	142	**C512_25.9 P90 BE90LA4**	**C512_25.9 P90 BX90LA4**	143
57	239	1.3	25.1	4840	**C322_25.1 S3 ME3SB4**	**C322_25.1 S3 MX3SB4**	130	**C322_25.1 P90 BE90LA4**	**C322_25.1 P90 BX90LA4**	131
57	238	2.1	25.0	6680	**C412_25.0 S3 ME3SB4**	**C412_25.0 S3 MX3SB4**	138	**C412_25.0 P90 BE90LA4**	**C412_25.0 P90 BX90LA4**	139
62	218	1.4	22.9	4750	**C322_22.9 S3 ME3SB4**	**C322_22.9 S3 MX3SB4**	130	**C322_22.9 P90 BE90LA4**	**C322_22.9 P90 BX90LA4**	131
63	214	2.3	22.6	6510	**C412_22.6 S3 ME3SB4**	**C412_22.6 S3 MX3SB4**	138	**C412_22.6 P90 BE90LA4**	**C412_22.6 P90 BX90LA4**	139
65	206	2.1	22.1	5530	**C363_22.1 S3 ME3SB4**	**C363_22.1 S3 MX3SB4**	134	**C363_22.1 P90 BE90LA4**	**C363_22.1 P90 BX90LA4**	135
67	204	1.0	21.5	2600	**C222_21.5 S3 ME3SB4**	**C222_21.5 S3 MX3SB4**	126	**C222_21.5 P90 BE90LA4**	**C222_21.5 P90 BX90LA4**	127
71	191	1.5	20.1	4650	**C322_20.1 S3 ME3SB4**	**C322_20.1 S3 MX3SB4**	130	**C322_20.1 P90 BE90LA4**	**C322_20.1 P90 BX90LA4**	131
71	190	1.0	20.0	2740	**C222_20.0 S3 ME3SB4**	**C222_20.0 S3 MX3SB4**	126	**C222_20.0 P90 BE90LA4**	**C222_20.0 P90 BX90LA4**	127
72	188	2.6	19.8	6330	**C412_19.8 S3 ME3SB4**	**C412_19.8 S3 MX3SB4**	138	**C412_19.8 P90 BE90LA4**	**C412_19.8 P90 BX90LA4**	139
75	181	2.1	19.0	5330	**C362_19.0 S3 ME3SB4**	**C362_19.0 S3 MX3SB4**	134	**C362_19.0 P90 BE90LA4**	**C362_19.0 P90 BX90LA4**	135
79	173	1.6	18.2	4520	**C322_18.2 S3 ME3SB4**	**C322_18.2 S3 MX3SB4**	130	**C322_18.2 P90 BE90LA4**	**C322_18.2 P90 BX90LA4**	131
79	172	1.1	18.1	2700	**C222_18.1 S3 ME3SB4**	**C222_18.1 S3 MX3SB4**	126	**C222_18.1 P90 BE90LA4**	**C222_18.1 P90 BX90LA4**	127
80	169	2.8	17.8	6160	**C412_17.8 S3 ME3SB4**	**C412_17.8 S3 MX3SB4**	138	**C412_17.8 P90 BE90LA4**	**C412_17.8 P90 BX90LA4**	139
83	163	2.3	17.2	5140	**C362_17.2 S3 ME3SB4**	**C362_17.2 S3 MX3SB4**	134	**C362_17.2 P90 BE90LA4**	**C362_17.2 P90 BX90LA4**	135
90	150	1.2	15.8	2700	**C222_15.8 S3 ME3SB4**	**C222_15.8 S3 MX3SB4**	126	**C222_15.8 P90 BE90LA4**	**C222_15.8 P90 BX90LA4**	127
90	150	3.0	15.8	6000	**C412_15.8 S3 ME3SB4**	**C412_15.8 S3 MX3SB4**	138	**C412_15.8 P90 BE90LA4**	**C412_15.8 P90 BX90LA4**	139
92	148	1.8	15.6	4410	**C322_15.6 S3 ME3SB4**	**C322_15.6 S3 MX3SB4**	130	**C322_15.6 P90 BE90LA4**	**C322_15.6 P90 BX90LA4**	131
97	140	2.7	14.8	5030	**C362_14.8 S3 ME3SB4**	**C362_14.8 S3 MX3SB4**	134	**C362_14.8 P90 BE90LA4**	**C362_14.8 P90 BX90LA4**	135
98	138	1.2	14.5	2700	**C222_14.5 S3 ME3SB4**	**C222_14.5 S3 MX3SB4**	126	**C222_14.5 P90 BE90LA4**	**C222_14.5 P90 BX90LA4**	127
100	135	3.3	14.2	5830	**C412_14.2 S3 ME3SB4**	**C412_14.2 S3 MX3SB4**	138	**C412_14.2 P90 BE90LA4**	**C412_14.2 P90 BX90LA4**	139
102	134	1.9	14.1	4280	**C322_14.1 S3 ME3SB4**	**C322_14.1 S3 MX3SB4**	130	**C322_14.1 P90 BE90LA4**	**C322_14.1 P90 BX90LA4**	131
107	127	3.0	13.3	4890	**C362_13.3 S3 ME3SB4**	**C362_13.3 S3 MX3SB4**	134	**C362_13.3 P90 BE90LA4**	**C362_13.3 P90 BX90LA4**	135
115	118	1.4	12.4	2630	**C222_12.4 S3 ME3SB4**	**C222_12.4 S3 MX3SB4**	126	**C222_12.4 P90 BE90LA4**	**C222_12.4 P90 BX90LA4**	127
116	117	2.1	12.3	4180	**C322_12.3 S3 ME3SB4**	**C322_12.3 S3 MX3SB4**	130	**C322_12.3 P90 BE90LA4**	**C322_12.3 P90 BX90LA4**	131
123	111	3.4	11.7	4740	**C362_11.7 S3 ME3SB4**	**C362_11.7 S3 MX3SB4**	134	**C362_11.7 P90 BE90LA4**	**C362_11.7 P90 BX90LA4**	135
128	106	2.2	11.2	4050	**C322_11.2 S3 ME3SB4**	**C322_11.2 S3 MX3SB4**	130	**C322_11.2 P90 BE90LA4**	**C322_11.2 P90 BX90LA4**	131
129	105	1.5	11.1	2600	**C222_11.1 S3 ME3SB4**	**C222_11.1 S3 MX3SB4**	126	**C222_11.1 P90 BE90LA4**	**C222_11.1 P90 BX90LA4**	127
148	92	1.6	9.6	2530	**C222_9.6 S3 ME3SB4**	**C222_9.6 S3 MX3SB4**	126	**C222_9.6 P90 BE90LA4**	**C222_9.6 P90 BX90LA4**	127
154	88	2.5	9.3	3900	**C322_9.3 S3 ME3SB4**	**C322_9.3 S3 MX3SB4**	130	**C322_9.3 P90 BE90LA4**	**C322_9.3 P90 BX90LA4**	131
165	82	1.7	8.7	2470	**C222_8.7 S3 ME3SB4**	**C222_8.7 S3 MX3SB4**	126	**C222_8.7 P90 BE90LA4**	**C222_8.7 P90 BX90LA4**	127
169	81	2.6	8.5	3790	**C322_8.5 S3 ME3SB4**	**C322_8.5 S3 MX3SB4**	130	**C322_8.5 P90 BE90LA4**	**C322_8.5 P90 BX90LA4**	131
180	75	2.3	15.8	2440	**C222_15.8 S3 ME3SA2**		126	**C222_15.8 P90 BE90SA2**		127
191	71	2.2	5.0	3610	**C322_5.0 S3 ME3LB6**		130	**C322_5.0 P100 BE100LA6**		131
200	68	2.9	7.2	3640	**C322_7.2 S3 ME3SB4**	**C322_7.2 S3 MX3SB4**	130	**C322_7.2 P90 BE90LA4**	**C322_7.2 P90 BX90LA4**	131
202	67	1.9	7.1	2380	**C222_7.1 S3 ME3SB4**	**C222_7.1 S3 MX3SB4**	126	**C222_7.1 P90 BE90LA4**	**C222_7.1 P90 BX90LA4**	127
204	67	3.0	4.6	4050	**C362_4.6 S3 ME3LB6**		134	**C362_4.6 P100 BE100LA6**		135
228	60	2.6	6.3	3450	**C322_6.3 S3 ME3SB4**	**C322_6.3 S3 MX3SB4**	130	**C322_6.3 P90 BE90LA4**	**C322_6.3 P90 BX90LA4**	131
229	59	0.9	6.2	600	**C122_6.2 S3 ME3SB4**	**C122_6.2 S3 MX3SB4**	122	**C122_6.2 P90 BE90LA4**	**C122_6.2 P90 BX90LA4**	123

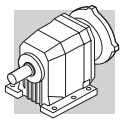

1.5 kW

n_2 min-1	M_2 Nm	S	i	R_{n2} N	IE2	IE3		IEC IE2	IEC IE3	
235	58	1.8	6.1	2250	**C222_6.1 S3 ME3SB4**	**C222_6.1 S3 MX3SB4**	126	**C222_6.1 P90 BE90LA4**	**C222_6.1 P90 BX90LA4**	127
240	57	1.2	11.9	1250	**C122_11.9 S3 ME3SA2**		122	**C122_11.9 P90 BE90SA2**		123
253	54	2.9	5.7	3320	**C322_5.7 S3 ME3SB4**	**C322_5.7 S3 MX3SB4**	130	**C322_5.7 P90 BE90LA4**	**C322_5.7 P90 BX90LA4**	131
255	53	1.7	3.7	2210	**C222_3.7 S3 ME3LB6**		126	**C222_3.7 P100 BE100LA6**		127
255	53	1.0	5.6	720	**C122_5.6 S3 ME3SB4**	**C122_5.6 S3 MX3SB4**	122	**C122_5.6 P90 BE90LA4**	**C122_5.6 P90 BX90LA4**	123
256	53	1.9	5.6	2200	**C222_5.6 S3 ME3SB4**	**C222_5.6 S3 MX3SB4**	126	**C222_5.6 P90 BE90LA4**	**C222_5.6 P90 BX90LA4**	127
284	48	1.3	10.1	1340	**C122_10.1 S3 ME3SA2**		122	**C122_10.1 P90 BE90SA2**		123
289	47	3.3	5.0	3240	**C322_5.0 S3 ME3SB4**	**C322_5.0 S3 MX3SB4**	130	**C322_5.0 P90 BE90LA4**	**C322_5.0 P90 BX90LA4**	131
294	46	1.0	4.9	840	**C122_4.9 S3 ME3SB4**	**C122_4.9 S3 MX3SB4**	122	**C122_4.9 P90 BE90LA4**	**C122_4.9 P90 BX90LA4**	123
300	45	2.2	4.8	2140	**C222_4.8 S3 ME3SB4**	**C222_4.8 S3 MX3SB4**	126	**C222_4.8 P90 BE90LA4**	**C222_4.8 P90 BX90LA4**	127
323	42	1.4	8.8	1300	**C122_8.8 S3 ME3SA2**		122	**C122_8.8 P90 BE90SA2**		123
330	41	3.3	8.7	2130	**C222_8.7 S3 ME3SA2**		126	**C222_8.7 P90 BE90SA2**		127
332	41	1.1	4.3	930	**C122_4.3 S3 ME3SB4**	**C122_4.3 S3 MX3SB4**	122	**C122_4.3 P90 BE90LA4**	**C122_4.3 P90 BX90LA4**	123
336	40	2.3	4.3	2100	**C222_4.3 S3 ME3SB4**	**C222_4.3 S3 MX3SB4**	126	**C222_4.3 P90 BE90LA4**	**C222_4.3 P90 BX90LA4**	127
341	40	0.9	2.8	1000	**C122_2.8 S3 ME3LB6**		122	**C122_2.8 P100 BE100LA6**		123
347	39	2.0	2.7	2060	**C222_2.7 S3 ME3LB6**		126	**C222_2.7 P100 BE100LA6**		127
375	36	1.5	7.6	1270	**C122_7.6 S3 ME3SA2**		122	**C122_7.6 P90 BE90SA2**		123
386	35	2.6	3.7	2020	**C222_3.7 S3 ME3SB4**	**C222_3.7 S3 MX3SB4**	126	**C222_3.7 P90 BE90LA4**	**C222_3.7 P90 BX90LA4**	127
392	35	1.2	3.7	1100	**C122_3.7 S3 ME3SB4**	**C122_3.7 S3 MX3SB4**	122	**C122_3.7 P90 BE90LA4**	**C122_3.7 P90 BX90LA4**	123
403	34	3.9	7.1	2030	**C222_7.1 S3 ME3SA2**		126	**C222_7.1 P90 BE90SA2**		127
430	32	2.7	3.3	2000	**C222_3.3 S3 ME3SB4**	**C222_3.3 S3 MX3SB4**	126	**C222_3.3 P90 BE90LA4**	**C222_3.3 P90 BX90LA4**	127
446	30	1.3	3.2	1120	**C122_3.2 S3 ME3SB4**	**C122_3.2 S3 MX3SB4**	122	**C122_3.2 P90 BE90LA4**	**C122_3.2 P90 BX90LA4**	123
458	30	1.8	6.2	1180	**C122_6.2 S3 ME3SA2**		122	**C122_6.2 P90 BE90SA2**		123
469	29	3.6	6.1	1920	**C222_6.1 S3 ME3SA2**		126	**C222_6.1 P90 BE90SA2**		127
510	27	1.9	5.6	1140	**C122_5.6 S3 ME3SA2**		122	**C122_5.6 P90 BE90SA2**		123
511	27	3.8	5.6	1860	**C222_5.6 S3 ME3SA2**		126	**C222_5.6 P90 BE90SA2**		127
517	26	1.4	2.8	1140	**C122_2.8 S3 ME3SB4**	**C122_2.8 S3 MX3SB4**	122	**C122_2.8 P90 BE90LA4**	**C122_2.8 P90 BX90LA4**	123
525	26	3.1	2.7	1870	**C222_2.7 S3 ME3SB4**	**C222_2.7 S3 MX3SB4**	126	**C222_2.7 P90 BE90LA4**	**C222_2.7 P90 BX90LA4**	127
586	23	2.1	4.9	1110	**C122_4.9 S3 ME3SA2**		122	**C122_4.9 P90 BE90SA2**		123
599	23	4.4	4.8	1810	**C222_4.8 S3 ME3SA2**		126	**C222_4.8 P90 BE90SA2**		127
662	21	2.2	4.3	1070	**C122_4.3 S3 ME3SA2**		122	**C122_4.3 P90 BE90SA2**		123
782	17	2.4	3.7	1030	**C122_3.7 S3 ME3SA2**		122	**C122_3.7 P90 BE90SA2**		123
890	15	2.6	3.2	990	**C122_3.2 S3 ME3SA2**		122	**C122_3.2 P90 BE90SA2**		123
1032	13	2.8	2.8	960	**C122_2.8 S3 ME3SA2**		122	**C122_2.8 P90 BE90SA2**		123

2.2 kW

n_2 min-1	M_2 Nm	S	i	R_{n2} N	IE2	IE3		IEC IE2	IEC IE3	
1.4	13281	0.9	1004	85000	**C1004_1004 S3 ME3LA4**	**C1004_1004 S3 MX3LA4**	159	**C1004_1004 P100 BE100LA4**	**C1004_1004 P100 BX100LA4**	160
1.6	12016	1.0	908.2	85000	**C1004_908.2 S3 ME3LA4**	**C1004_908.2 S3 MX3LA4**	159	**C1004_908.2 P100 BE100LA4**	**C1004_908.2 P100 BX100LA4**	160
1.7	11157	1.1	843.3	85000	**C1004_843.3 S3 ME3LA4**	**C1004_843.3 S3 MX3LA4**	159	**C1004_843.3 P100 BE100LA4**	**C1004_843.3 P100 BX100LA4**	160
1.8	10263	1.2	775.7	85000	**C1004_775.7 S3 ME3LA4**	**C1004_775.7 S3 MX3LA4**	159	**C1004_775.7 P100 BE100LA4**	**C1004_775.7 P100 BX100LA4**	160
2.0	9530	1.3	720.3	85000	**C1004_720.3 S3 ME3LA4**	**C1004_720.3 S3 MX3LA4**	159	**C1004_720.3 P100 BE100LA4**	**C1004_720.3 P100 BX100LA4**	160
2.3	8301	1.4	627.4	85000	**C1004_627.4 S3 ME3LA4**	**C1004_627.4 S3 MX3LA4**	159	**C1004_627.4 P100 BE100LA4**	**C1004_627.4 P100 BX100LA4**	160
2.5	7710	0.9	582.8	60000	**C904_582.8 S3 ME3LA4**	**C904_582.8 S3 MX3LA4**	156	**C904_582.8 P100 BE100LA4**	**C904_582.8 P100 BX100LA4**	157
2.5	7708	1.6	582.6	85000	**C1004_582.6 S3 ME3LA4**	**C1004_582.6 S3 MX3LA4**	159	**C1004_582.6 P100 BE100LA4**	**C1004_582.6 P100 BX100LA4**	160
2.7	7068	1.0	534.2	60000	**C904_534.2 S3 ME3LA4**	**C904_534.2 S3 MX3LA4**	156	**C904_534.2 P100 BE100LA4**	**C904_534.2 P100 BX100LA4**	157
2.8	6650	1.8	502.6	85000	**C1004_502.6 S3 ME3LA4**	**C1004_502.6 S3 MX3LA4**	159	**C1004_502.6 P100 BE100LA4**	**C1004_502.6 P100 BX100LA4**	160
3.1	6175	1.9	466.7	85000	**C1004_466.7 S3 ME3LA4**	**C1004_466.7 S3 MX3LA4**	159	**C1004_466.7 P100 BE100LA4**	**C1004_466.7 P100 BX100LA4**	160
3.1	6048	1.2	457.1	60000	**C904_457.1 S3 ME3LA4**	**C904_457.1 S3 MX3LA4**	156	**C904_457.1 P100 BE100LA4**	**C904_457.1 P100 BX100LA4**	157
3.4	5544	1.3	419.0	60000	**C904_419.0 S3 ME3LA4**	**C904_419.0 S3 MX3LA4**	156	**C904_419.0 P100 BE100LA4**	**C904_419.0 P100 BX100LA4**	157
3.5	5421	2.2	409.8	85000	**C1004_409.8 S3 ME3LA4**	**C1004_409.8 S3 MX3LA4**	159	**C1004_409.8 P100 BE100LA4**	**C1004_409.8 P100 BX100LA4**	160
3.8	5034	2.4	380.5	85000	**C1004_380.5 S3 ME3LA4**	**C1004_380.5 S3 MX3LA4**	159	**C1004_380.5 P100 BE100LA4**	**C1004_380.5 P100 BX100LA4**	160
3.9	4892	1.5	369.8	60000	**C904_369.8 S3 ME3LA4**	**C904_369.8 S3 MX3LA4**	156	**C904_369.8 P100 BE100LA4**	**C904_369.8 P100 BX100LA4**	157
4.2	4484	1.6	339.0	60000	**C904_339.0 S3 ME3LA4**	**C904_339.0 S3 MX3LA4**	156	**C904_339.0 P100 BE100LA4**	**C904_339.0 P100 BX100LA4**	157
4.3	4422	0.9	334.3	35000	**C804_334.3 S3 ME3LA4**	**C804_334.3 S3 MX3LA4**	153	**C804_334.3 P100 BE100LA4**	**C804_334.3 P100 BX100LA4**	154
4.4	4282	2.8	323.6	85000	**C1004_323.6 S3 ME3LA4**	**C1004_323.6 S3 MX3LA4**	159	**C1004_323.6 P100 BE100LA4**	**C1004_323.6 P100 BX100LA4**	160
4.9	3875	1.9	292.9	60000	**C904_292.9 S3 ME3LA4**	**C904_292.9 S3 MX3LA4**	156	**C904_292.9 P100 BE100LA4**	**C904_292.9 P100 BX100LA4**	157
5.0	3779	1.1	285.7	35000	**C804_285.7 S3 ME3LA4**	**C804_285.7 S3 MX3LA4**	153	**C804_285.7 P100 BE100LA4**	**C804_285.7 P100 BX100LA4**	154
5.3	3552	2.0	268.5	60000	**C904_268.5 S3 ME3LA4**	**C904_268.5 S3 MX3LA4**	156	**C904_268.5 P100 BE100LA4**	**C904_268.5 P100 BX100LA4**	157
5.5	3464	1.2	261.9	35000	**C804_261.9 S3 ME3LA4**	**C804_261.9 S3 MX3LA4**	153	**C804_261.9 P100 BE100LA4**	**C804_261.9 P100 BX100LA4**	154

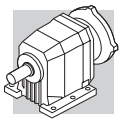

2.2 kW

n_2 min^{-1}	M_2 Nm	S	i	R_{n2} N	IE2	IE3		IE2	IEC IE3	
6.2	3065	2.3	231.7	60000	**C904_231.7 S3 ME3LA4**	**C904_231.7 S3 MX3LA4**	156	**C904_231.7 P100 BE100LA4**	**C904_231.7 P100 BX100LA4**	157
6.6	2951	1.4	215.8	35000	**C803_215.8 S3 ME3LA4**	**C803_215.8 S3 MX3LA4**	153	**C803_215.8 P100 BE100LA4**	**C803_215.8 P100 BX100LA4**	154
6.7	2810	2.6	212.4	60000	**C904_212.4 S3 ME3LA4**	**C904_212.4 S3 MX3LA4**	156	**C904_212.4 P100 BE100LA4**	**C904_212.4 P100 BX100LA4**	157
7.2	2705	1.4	197.9	35000	**C803_197.9 S3 ME3LA4**	**C803_197.9 S3 MX3LA4**	153	**C803_197.9 P100 BE100LA4**	**C803_197.9 P100 BX100LA4**	154
7.8	2520	1.6	184.4	35000	**C803_184.4 S3 ME3LA4**	**C803_184.4 S3 MX3LA4**	153	**C803_184.4 P100 BE100LA4**	**C803_184.4 P100 BX100LA4**	154
8.0	2450	0.9	179.2	25000	**C703_179.2 S3 ME3LA4**	**C703_179.2 S3 MX3LA4**	150	**C703_179.2 P100 BE100LA4**	**C703_179.2 P100 BX100LA4**	151
8.5	2310	1.7	169.0	35000	**C803_169.0 S3 ME3LA4**	**C803_169.0 S3 MX3LA4**	153	**C803_169.0 P100 BE100LA4**	**C803_169.0 P100 BX100LA4**	154
8.8	2226	1.0	162.8	25000	**C703_162.8 S3 ME3LA4**	**C703_162.8 S3 MX3LA4**	150	**C703_162.8 P100 BE100LA4**	**C703_162.8 P100 BX100LA4**	151
9.5	2055	1.1	150.3	25000	**C703_150.3 S3 ME3LA4**	**C703_150.3 S3 MX3LA4**	150	**C703_150.3 P100 BE100LA4**	**C703_150.3 P100 BX100LA4**	151
9.6	2038	2.0	149.1	35000	**C803_149.1 S3 ME3LA4**	**C803_149.1 S3 MX3LA4**	153	**C803_149.1 P100 BE100LA4**	**C803_149.1 P100 BX100LA4**	154
10.4	1878	1.2	137.4	25000	**C703_137.4 S3 ME3LA4**	**C703_137.4 S3 MX3LA4**	150	**C703_137.4 P100 BE100LA4**	**C703_137.4 P100 BX100LA4**	151
10.5	1869	2.1	136.7	35000	**C803_136.7 S3 ME3LA4**	**C803_136.7 S3 MX3LA4**	153	**C803_136.7 P100 BE100LA4**	**C803_136.7 P100 BX100LA4**	154
11.2	1695	0.9	128.1	16000	**C613_128.1 S3 ME3LA4**	**C613_128.1 S3 MX3LA4**	146	**C613_128.1 P100 BE100LA4**	**C613_128.1 P100 BX100LA4**	147
11.3	1734	1.3	126.8	25000	**C703_126.8 S3 ME3LA4**	**C703_126.8 S3 MX3LA4**	150	**C703_126.8 P100 BE100LA4**	**C703_126.8 P100 BX100LA4**	151
12.0	1633	2.4	119.5	35000	**C803_119.5 S3 ME3LA4**	**C803_119.5 S3 MX3LA4**	153	**C803_119.5 P100 BE100LA4**	**C803_119.5 P100 BX100LA4**	154
12.6	1503	1.1	113.6	16000	**C613_113.6 S3 ME3LA4**	**C613_113.6 S3 MX3LA4**	146	**C613_113.6 P100 BE100LA4**	**C613_113.6 P100 BX100LA4**	147
12.7	1537	1.5	112.4	25000	**C703_112.4 S3 ME3LA4**	**C703_112.4 S3 MX3LA4**	150	**C703_112.4 P100 BE100LA4**	**C703_112.4 P100 BX100LA4**	151
13.1	1497	2.7	109.5	35000	**C803_109.5 S3 ME3LA4**	**C803_109.5 S3 MX3LA4**	153	**C803_109.5 P100 BE100LA4**	**C803_109.5 P100 BX100LA4**	154
13.8	1419	1.6	103.8	25000	**C703_103.8 S3 ME3LA4**	**C703_103.8 S3 MX3LA4**	150	**C703_103.8 P100 BE100LA4**	**C703_103.8 P100 BX100LA4**	151
13.8	1371	1.2	103.6	16000	**C613_103.6 S3 ME3LA4**	**C613_103.6 S3 MX3LA4**	146	**C613_103.6 P100 BE100LA4**	**C613_103.6 P100 BX100LA4**	147
14.7	1331	3.0	97.4	35000	**C803_97.4 S3 ME3LA4**	**C803_97.4 S3 MX3LA4**	153	**C803_97.4 P100 BE100LA4**	**C803_97.4 P100 BX100LA4**	154
15.7	1204	1.3	91.0	16000	**C613_91.0 S3 ME3LA4**	**C613_91.0 S3 MX3LA4**	146	**C613_91.0 P100 BE100LA4**	**C613_91.0 P100 BX100LA4**	147
16.0	1220	3.3	89.3	35000	**C803_89.3 S3 ME3LA4**	**C803_89.3 S3 MX3LA4**	153	**C803_89.3 P100 BE100LA4**	**C803_89.3 P100 BX100LA4**	154
16.2	1206	1.9	88.2	25000	**C703_88.2 S3 ME3LA4**	**C703_88.2 S3 MX3LA4**	150	**C703_88.2 P100 BE100LA4**	**C703_88.2 P100 BX100LA4**	151
17.2	1099	1.5	83.0	16000	**C613_83.0 S3 ME3LA4**	**C613_83.0 S3 MX3LA4**	146	**C613_83.0 P100 BE100LA4**	**C613_83.0 P100 BX100LA4**	147
17.6	1113	2.1	81.4	25000	**C703_81.4 S3 ME3LA4**	**C703_81.4 S3 MX3LA4**	150	**C703_81.4 P100 BE100LA4**	**C703_81.4 P100 BX100LA4**	151
17.9	1092	0.9	79.9	10000	**C513_79.9 S3 ME3LA4**	**C513_79.9 S3 MX3LA4**	142	**C513_79.9 P100 BE100LA4**	**C513_79.9 P100 BX100LA4**	143
19.3	982	1.6	74.2	16000	**C613_74.2 S3 ME3LA4**	**C613_74.2 S3 MX3LA4**	146	**C613_74.2 P100 BE100LA4**	**C613_74.2 P100 BX100LA4**	147
19.6	997	1.0	72.9	10000	**C513_72.9 S3 ME3LA4**	**C513_72.9 S3 MX3LA4**	142	**C513_72.9 P100 BE100LA4**	**C513_72.9 P100 BX100LA4**	143
20.0	975	2.4	71.3	25000	**C703_71.3 S3 ME3LA4**	**C703_71.3 S3 MX3LA4**	150	**C703_71.3 P100 BE100LA4**	**C703_71.3 P100 BX100LA4**	151
21.1	896	1.8	67.7	16000	**C613_67.7 S3 ME3LA4**	**C613_67.7 S3 MX3LA4**	146	**C613_67.7 P100 BE100LA4**	**C613_67.7 P100 BX100LA4**	147
21.7	900	2.6	65.9	25000	**C703_65.9 S3 ME3LA4**	**C703_65.9 S3 MX3LA4**	150	**C703_65.9 P100 BE100LA4**	**C703_65.9 P100 BX100LA4**	151
22.1	883	1.1	64.6	10000	**C513_64.6 S3 ME3LA4**	**C513_64.6 S3 MX3LA4**	142	**C513_64.6 P100 BE100LA4**	**C513_64.6 P100 BX100LA4**	143
24.2	806	1.2	59.0	10000	**C513_59.0 S3 ME3LA4**	**C513_59.0 S3 MX3LA4**	142	**C513_59.0 P100 BE100LA4**	**C513_59.0 P100 BX100LA4**	143
24.4	775	2.1	58.6	16000	**C613_58.6 S3 ME3LA4**	**C613_58.6 S3 MX3LA4**	146	**C613_58.6 P100 BE100LA4**	**C613_58.6 P100 BX100LA4**	147
25.1	796	1.0	57.0	10000	**C512_57.0 S3 ME3LA4**	**C512_57.0 S3 MX3LA4**	142	**C512_57.0 P100 BE100LA4**	**C512_57.0 P100 BX100LA4**	143
25.3	773	3.0	56.5	25000	**C703_56.5 S3 ME3LA4**	**C703_56.5 S3 MX3LA4**	150	**C703_56.5 P100 BE100LA4**	**C703_56.5 P100 BX100LA4**	151
26.7	707	2.3	53.5	16000	**C613_53.5 S3 ME3LA4**	**C613_53.5 S3 MX3LA4**	146	**C613_53.5 P100 BE100LA4**	**C613_53.5 P100 BX100LA4**	147
27.8	718	1.0	51.4	10000	**C512_51.4 S3 ME3LA4**	**C512_51.4 S3 MX3LA4**	142	**C512_51.4 P100 BE100LA4**	**C512_51.4 P100 BX100LA4**	143
27.9	700	1.4	51.2	10000	**C513_51.2 S3 ME3LA4**	**C513_51.2 S3 MX3LA4**	142	**C513_51.2 P100 BE100LA4**	**C513_51.2 P100 BX100LA4**	143
29.9	668	1.2	47.8	10000	**C512_47.8 S3 ME3LA4**	**C512_47.8 S3 MX3LA4**	142	**C512_47.8 P100 BE100LA4**	**C512_47.8 P100 BX100LA4**	143
30	630	2.5	47.6	16000	**C613_47.6 S3 ME3LA4**	**C613_47.6 S3 MX3LA4**	146	**C613_47.6 P100 BE100LA4**	**C613_47.6 P100 BX100LA4**	147
30	642	0.9	47.0	6440	**C413_47.0 S3 ME3LA4**	**C413_47.0 S3 MX3LA4**	138	**C413_47.0 P100 BE100LA4**	**C413_47.0 P100 BX100LA4**	139
31	639	1.6	46.7	10000	**C513_46.7 S3 ME3LA4**	**C513_46.7 S3 MX3LA4**	142	**C513_46.7 P100 BE100LA4**	**C513_46.7 P100 BX100LA4**	143
33	575	2.8	43.4	16000	**C613_43.4 S3 ME3LA4**	**C613_43.4 S3 MX3LA4**	146	**C613_43.4 P100 BE100LA4**	**C613_43.4 P100 BX100LA4**	147
33	602	1.3	43.1	10000	**C512_43.1 S3 ME3LA4**	**C512_43.1 S3 MX3LA4**	142	**C512_43.1 P100 BE100LA4**	**C512_43.1 P100 BX100LA4**	143
35	553	1.8	40.5	10000	**C513_40.5 S3 ME3LA4**	**C513_40.5 S3 MX3LA4**	142	**C513_40.5 P100 BE100LA4**	**C513_40.5 P100 BX100LA4**	143
35	564	1.4	40.4	10000	**C512_40.4 S3 ME3LA4**	**C512_40.4 S3 MX3LA4**	142	**C512_40.4 P100 BE100LA4**	**C512_40.4 P100 BX100LA4**	143
35	551	1.1	40.3	6460	**C413_40.3 S3 ME3LA4**	**C413_40.3 S3 MX3LA4**	138	**C413_40.3 P100 BE100LA4**	**C413_40.3 P100 BX100LA4**	139
38	531	2.5	38.0	16000	**C612_38.0 S3 ME3LA4**	**C612_38.0 S3 MX3LA4**	146	**C612_38.0 P100 BE100LA4**	**C612_38.0 P100 BX100LA4**	147
39	518	1.0	37.1	6370	**C412_37.1 S3 ME3LA4**	**C412_37.1 S3 MX3LA4**	138	**C412_37.1 P100 BE100LA4**	**C412_37.1 P100 BX100LA4**	139
39	505	2.0	37.0	10000	**C513_37.0 S3 ME3LA4**	**C513_37.0 S3 MX3LA4**	142	**C513_37.0 P100 BE100LA4**	**C513_37.0 P100 BX100LA4**	143
39	503	1.2	36.8	6390	**C413_36.8 S3 ME3LA4**	**C413_36.8 S3 MX3LA4**	138	**C413_36.8 P100 BE100LA4**	**C413_36.8 P100 BX100LA4**	139
39	508	1.6	36.4	10000	**C512_36.4 S3 ME3LA4**	**C512_36.4 S3 MX3LA4**	142	**C512_36.4 P100 BE100LA4**	**C512_36.4 P100 BX100LA4**	143
41	473	1.0	34.6	5350	**C363_34.6 S3 ME3LA4**	**C363_34.6 S3 MX3LA4**	134	**C363_34.6 P100 BE100LA4**	**C363_34.6 P100 BX100LA4**	135
42	478	2.6	34.2	16000	**C612_34.2 S3 ME3LA4**	**C612_34.2 S3 MX3LA4**	146	**C612_34.2 P100 BE100LA4**	**C612_34.2 P100 BX100LA4**	147
43	466	1.1	33.4	6290	**C412_33.4 S3 ME3LA4**	**C412_33.4 S3 MX3LA4**	138	**C412_33.4 P100 BE100LA4**	**C412_33.4 P100 BX100LA4**	139
43	461	1.7	33.0	10000	**C512_33.0 S3 ME3LA4**	**C512_33.0 S3 MX3LA4**	142	**C512_33.0 P100 BE100LA4**	**C512_33.0 P100 BX100LA4**	143
45	439	1.1	31.4	6290	**C412_31.4 S3 ME3LA4**	**C412_31.4 S3 MX3LA4**	138	**C412_31.4 P100 BE100LA4**	**C412_31.4 P100 BX100LA4**	139
47	425	3.2	30.4	16000	**C612_30.4 S3 ME3LA4**	**C612_30.4 S3 MX3LA4**	146	**C612_30.4 P100 BE100LA4**	**C612_30.4 P100 BX100LA4**	147
48	411	2.4	30.1	10000	**C513_30.1 S3 ME3LA4**	**C513_30.1 S3 MX3LA4**	142	**C513_30.1 P100 BE100LA4**	**C513_30.1 P100 BX100LA4**	143
48	416	1.9	29.8	10000	**C512_29.8 S3 ME3LA4**	**C512_29.8 S3 MX3LA4**	142	**C512_29.8 P100 BE100LA4**	**C512_29.8 P100 BX100LA4**	143
50	393	1.1	28.7	5220	**C363_28.7 S3 ME3LA4**	**C363_28.7 S3 MX3LA4**	134	**C363_28.7 P100 BE100LA4**	**C363_28.7 P100 BX100LA4**	135
51	395	1.3	28.3	6190	**C412_28.3 S3 ME3LA4**	**C412_28.3 S3 MX3LA4**	138	**C412_28.3 P100 BE100LA4**	**C412_28.3 P100 BX100LA4**	139
52	375	2.6	27.4	10000	**C513_27.4 S3 ME3LA4**	**C513_27.4 S3 MX3LA4**	142	**C513_27.4 P100 BE100LA4**	**C513_27.4 P100 BX100LA4**	143

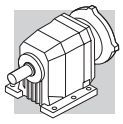

2.2 kW

n_2	M_2	S	i	R_{n2}	IE2	IE3		IE2	IE3	
min-1	Nm			N						
52	383	3.5	27.4	15900	**C612_27.4 S3 ME3LA4**	**C612_27.4 S3 MX3LA4**	146	**C612_27.4 P100 BE100LA4**	**C612_27.4 P100 BX100LA4**	147
55	358	1.2	26.2	5140	**C363_26.2 S3 ME3LA4**	**C363_26.2 S3 MX3LA4**	134	**C363_26.2 P100 BE100LA4**	**C363_26.2 P100 BX100LA4**	135
55	362	2.2	25.9	10000	**C512_25.9 S3 ME3LA4**	**C512_25.9 S3 MX3LA4**	142	**C512_25.9 P100 BE100LA4**	**C512_25.9 P100 BX100LA4**	143
57	351	0.9	25.1	4270	**C322_25.1 S3 ME3LA4**	**C322_25.1 S3 MX3LA4**	130	**C322_25.1 P100 BE100LA4**	**C322_25.1 P100 BX100LA4**	131
57	350	1.4	25.0	6120	**C412_25.0 S3 ME3LA4**	**C412_25.0 S3 MX3LA4**	138	**C412_25.0 P100 BE100LA4**	**C412_25.0 P100 BX100LA4**	139
61	326	2.5	23.4	10000	**C512_23.4 S3 ME3LA4**	**C512_23.4 S3 MX3LA4**	142	**C512_23.4 P100 BE100LA4**	**C512_23.4 P100 BX100LA4**	143
62	320	0.9	22.9	4240	**C322_22.9 S3 ME3LA4**	**C322_22.9 S3 MX3LA4**	130	**C322_22.9 P100 BE100LA4**	**C322_22.9 P100 BX100LA4**	131
63	315	1.6	22.6	6000	**C412_22.6 S3 ME3LA4**	**C412_22.6 S3 MX3LA4**	138	**C412_22.6 P100 BE100LA4**	**C412_22.6 P100 BX100LA4**	139
65	303	1.4	22.1	5060	**C363_22.1 S3 ME3LA4**	**C363_22.1 S3 MX3LA4**	134	**C363_22.1 P100 BE100LA4**	**C363_22.1 P100 BX100LA4**	135
68	293	2.7	21.0	10000	**C512_21.0 S3 ME3LA4**	**C512_21.0 S3 MX3LA4**	142	**C512_21.0 P100 BE100LA4**	**C512_21.0 P100 BX100LA4**	143
71	280	1.1	20.1	4200	**C322_20.1 S3 ME3LA4**	**C322_20.1 S3 MX3LA4**	130	**C322_20.1 P100 BE100LA4**	**C322_20.1 P100 BX100LA4**	131
72	276	1.8	19.8	5890	**C412_19.8 S3 ME3LA4**	**C412_19.8 S3 MX3LA4**	138	**C412_19.8 P100 BE100LA4**	**C412_19.8 P100 BX100LA4**	139
75	265	1.4	19.0	4920	**C362_19.0 S3 ME3LA4**	**C362_19.0 S3 MX3LA4**	134	**C362_19.0 P100 BE100LA4**	**C362_19.0 P100 BX100LA4**	135
76	264	3.0	18.9	10000	**C512_18.9 S3 ME3LA4**	**C512_18.9 S3 MX3LA4**	142	**C512_18.9 P100 BE100LA4**	**C512_18.9 P100 BX100LA4**	143
77	258	1.0	12.3	4100	**C322_12.3 S4 ME4SA6**		130	**C322_12.3 P112 BE112M6**		131
79	254	1.1	18.2	4120	**C322_18.2 S3 ME3LA4**	**C322_18.2 S3 MX3LA4**	130	**C322_18.2 P100 BE100LA4**	**C322_18.2 P100 BX100LA4**	131
80	248	1.9	17.8	5760	**C412_17.8 S3 ME3LA4**	**C412_17.8 S3 MX3LA4**	138	**C412_17.8 P100 BE100LA4**	**C412_17.8 P100 BX100LA4**	139
83	240	1.6	17.2	4800	**C362_17.2 S3 ME3LA4**	**C362_17.2 S3 MX3LA4**	134	**C362_17.2 P100 BE100LA4**	**C362_17.2 P100 BX100LA4**	135
85	234	1.0	11.2	4060	**C322_11.2 S4 ME4SA6**		130	**C322_11.2 P112 BE112M6**		131
90	221	2.0	15.8	5650	**C412_15.8 S3 ME3LA4**	**C412_15.8 S3 MX3LA4**	138	**C412_15.8 P100 BE100LA4**	**C412_15.8 P100 BX100LA4**	139
92	218	1.2	15.6	4060	**C322_15.6 S3 ME3LA4**	**C322_15.6 S3 MX3LA4**	130	**C322_15.6 P100 BE100LA4**	**C322_15.6 P100 BX100LA4**	131
97	206	1.8	14.8	4710	**C362_14.8 S3 ME3LA4**	**C362_14.8 S3 MX3LA4**	134	**C362_14.8 P100 BE100LA4**	**C362_14.8 P100 BX100LA4**	135
100	199	2.2	14.2	5510	**C412_14.2 S3 ME3LA4**	**C412_14.2 S3 MX3LA4**	138	**C412_14.2 P100 BE100LA4**	**C412_14.2 P100 BX100LA4**	139
102	197	1.3	14.1	3980	**C322_14.1 S3 ME3LA4**	**C322_14.1 S3 MX3LA4**	130	**C322_14.1 P100 BE100LA4**	**C322_14.1 P100 BX100LA4**	131
103	194	1.1	9.3	3960	**C322_9.3 S4 ME4SA6**		130	**C322_9.3 P112 BE112M6**		131
107	186	2.0	13.3	4590	**C362_13.3 S3 ME3LA4**	**C362_13.3 S3 MX3LA4**	134	**C362_13.3 P100 BE100LA4**	**C362_13.3 P100 BX100LA4**	135
113	177	1.2	8.5	3890	**C322_8.5 S4 ME4SA6**		130	**C322_8.5 P112 BE112M6**		131
115	173	0.9	12.4	2270	**C222_12.4 S3 ME3LA4**	**C222_12.4 S3 MX3LA4**	126	**C222_12.4 P100 BE100LA4**	**C222_12.4 P100 BX100LA4**	127
115	173	2.5	12.4	5360	**C412_12.4 S3 ME3LA4**	**C412_12.4 S3 MX3LA4**	138	**C412_12.4 P100 BE100LA4**	**C412_12.4 P100 BX100LA4**	139
116	172	1.4	12.3	3900	**C322_12.3 S3 ME3LA4**	**C322_12.3 S3 MX3LA4**	130	**C322_12.3 P100 BE100LA4**	**C322_12.3 P100 BX100LA4**	131
123	163	2.3	11.7	4490	**C362_11.7 S3 ME3LA4**	**C362_11.7 S3 MX3LA4**	134	**C362_11.7 P100 BE100LA4**	**C362_11.7 P100 BX100LA4**	135
128	156	1.5	11.2	3800	**C322_11.2 S3 ME3LA4**	**C322_11.2 S3 MX3LA4**	130	**C322_11.2 P100 BE100LA4**	**C322_11.2 P100 BX100LA4**	131
128	156	2.7	11.2	5220	**C412_11.2 S3 ME3LA4**	**C412_11.2 S3 MX3LA4**	138	**C412_11.2 P100 BE100LA4**	**C412_11.2 P100 BX100LA4**	139
129	155	1.0	11.1	2250	**C222_11.1 S3 ME3LA4**	**C222_11.1 S3 MX3LA4**	126	**C222_11.1 P100 BE100LA4**	**C222_11.1 P100 BX100LA4**	127
133	150	1.3	7.2	3810	**C322_7.2 S4 ME4SA6**		130	**C322_7.2 P112 BE112M6**		131
135	148	2.6	10.6	4320	**C362_10.6 S3 ME3LA4**	**C362_10.6 S3 MX3LA4**	134	**C362_10.6 P100 BE100LA4**	**C362_10.6 P100 BX100LA4**	135
148	135	1.1	9.6	2250	**C222_9.6 S3 ME3LA4**	**C222_9.6 S3 MX3LA4**	126	**C222_9.6 P100 BE100LA4**	**C222_9.6 P100 BX100LA4**	127
149	134	2.9	9.6	5050	**C412_9.6 S3 ME3LA4**	**C412_9.6 S3 MX3LA4**	138	**C412_9.6 P100 BE100LA4**	**C412_9.6 P100 BX100LA4**	139
152	131	1.2	6.3	3510	**C322_6.3 S4 ME4SA6**		130	**C322_6.3 P112 BE112M6**		131
154	130	1.7	9.3	3690	**C322_9.3 S3 ME3LA4**	**C322_9.3 S3 MX3LA4**	130	**C322_9.3 P100 BE100LA4**	**C322_9.3 P100 BX100LA4**	131
163	123	3.1	8.8	4210	**C362_8.8 S3 ME3LA4**	**C362_8.8 S3 MX3LA4**	134	**C362_8.8 P100 BE100LA4**	**C362_8.8 P100 BX100LA4**	135
165	121	1.1	8.7	2220	**C222_8.7 S3 ME3LA4**	**C222_8.7 S3 MX3LA4**	126	**C222_8.7 P100 BE100LA4**	**C222_8.7 P100 BX100LA4**	127
165	121	3.2	8.6	4850	**C412_8.6 S3 ME3LA4**	**C412_8.6 S3 MX3LA4**	138	**C412_8.6 P100 BE100LA4**	**C412_8.6 P100 BX100LA4**	139
169	118	1.8	8.5	3600	**C322_8.5 S3 ME3LA4**	**C322_8.5 S3 MX3LA4**	130	**C322_8.5 P100 BE100LA4**	**C322_8.5 P100 BX100LA4**	131
169	118	1.3	5.7	3450	**C322_5.7 S4 ME4SA6**		130	**C322_5.7 P112 BE112M6**		131
193	103	1.5	5.0	3410	**C322_5.0 S4 ME4SA6**		130	**C322_5.0 P112 BE112M6**		131
200	100	2.0	7.2	3480	**C322_7.2 S3 ME3LA4**	**C322_7.2 S3 MX3LA4**	130	**C322_7.2 P100 BE100LA4**	**C322_7.2 P100 BX100LA4**	131
202	99	1.3	7.1	2180	**C222_7.1 S3 ME3LA4**	**C222_7.1 S3 MX3LA4**	126	**C222_7.1 P100 BE100LA4**	**C222_7.1 P100 BX100LA4**	127
228	87	1.8	6.3	3250	**C322_6.3 S3 ME3LA4**	**C322_6.3 S3 MX3LA4**	130	**C322_6.3 P100 BE100LA4**	**C322_6.3 P100 BX100LA4**	131
235	85	1.2	6.1	2040	**C222_6.1 S3 ME3LA4**	**C222_6.1 S3 MX3LA4**	126	**C222_6.1 P100 BE100LA4**	**C222_6.1 P100 BX100LA4**	127
245	82	2.4	5.8	3710	**C362_5.8 S3 ME3LA4**	**C362_5.8 S3 MX3LA4**	134	**C362_5.8 P100 BE100LA4**	**C362_5.8 P100 BX100LA4**	135
253	79	2.0	5.7	3180	**C322_5.7 S3 ME3LA4**	**C322_5.7 S3 MX3LA4**	130	**C322_5.7 P100 BE100LA4**	**C322_5.7 P100 BX100LA4**	131
256	78	1.3	5.6	2050	**C222_5.6 S3 ME3LA4**	**C222_5.6 S3 MX3LA4**	126	**C222_5.6 P100 BE100LA4**	**C222_5.6 P100 BX100LA4**	127
271	74	2.7	5.3	3550	**C362_5.3 S3 ME3LA4**	**C362_5.3 S3 MX3LA4**	134	**C362_5.3 P100 BE100LA4**	**C362_5.3 P100 BX100LA4**	135
289	69	2.2	5.0	3100	**C322_5.0 S3 ME3LA4**	**C322_5.0 S3 MX3LA4**	130	**C322_5.0 P100 BE100LA4**	**C322_5.0 P100 BX100LA4**	131
300	67	1.5	4.8	1970	**C222_4.8 S3 ME3LA4**	**C222_4.8 S3 MX3LA4**	126	**C222_4.8 P100 BE100LA4**	**C222_4.8 P100 BX100LA4**	127
309	65	3.4	9.3	3130	**C322_9.3 S3 ME3LA2**		130	**C322_9.3 P90 BE90L2**		131
309	65	3.1	4.6	3490	**C362_4.6 S3 ME3LA4**	**C362_4.6 S3 MX3LA4**	134	**C362_4.6 P100 BE100LA4**	**C362_4.6 P100 BX100LA4**	135
318	63	2.4	4.5	3000	**C322_4.5 S3 ME3LA4**	**C322_4.5 S3 MX3LA4**	130	**C322_4.5 P100 BE100LA4**	**C322_4.5 P100 BX100LA4**	131
332	60	2.3	8.7	2000	**C222_8.7 S3 ME3LA2**		126	**C222_8.7 P90 BE90L2**		127
336	59	1.6	4.3	1970	**C222_4.3 S3 ME3LA4**	**C222_4.3 S3 MX3LA4**	126	**C222_4.3 P100 BE100LA4**	**C222_4.3 P100 BX100LA4**	127
355	56	3.6	2.7	3380	**C362_2.7 S4 ME4SA6**		134	**C362_2.7 P112 BE112M6**		135
377	53	1.1	7.6	930	**C122_7.6 S3 ME3LA2**		122	**C122_7.6 P90 BE90L2**		123
383	52	2.9	3.7	2890	**C322_3.7 S3 ME3LA4**	**C322_3.7 S3 MX3LA4**	130	**C322_3.7 P100 BE100LA4**	**C322_3.7 P100 BX100LA4**	131
386	52	1.7	3.7	1890	**C222_3.7 S3 ME3LA4**	**C222_3.7 S3 MX3LA4**	126	**C222_3.7 P100 BE100LA4**	**C222_3.7 P100 BX100LA4**	127

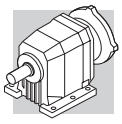

2.2 kW

n_2 min^{-1}	M_2 Nm	S	i	R_{n2} N	IE2	IE3		IE2	IEC IE3	
401	50	4.0	7.2	2920	**C322_7.2 S3 ME3LA2**		130	**C322_7.2 P90 BE90L2**		131
405	49	2.6	7.1	1920	**C222_7.1 S3 ME3LA2**		126	**C222_7.1 P90 BE90L2**		127
419	48	2.9	3.4	2800	**C322_3.4 S3 ME3LA4**	**C322_3.4 S3 MX3LA4**	130	**C322_3.4 P100 BE100LA4**	**C322_3.4 P100 BX100LA4**	131
430	46	1.8	3.3	1890	**C222_3.3 S3 ME3LA4**	**C222_3.3 S3 MX3LA4**	126	**C222_3.3 P100 BE100LA4**	**C222_3.3 P100 BX100LA4**	127
446	45	0.9	3.2	580	**C122_3.2 S3 ME3LA4**	**C122_3.2 S3 MX3LA4**	122	**C122_3.2 P100 BE100LA4**	**C122_3.2 P100 BX100LA4**	123
458	44	3.6	6.3	2760	**C322_6.3 S3 ME3LA2**		130	**C322_6.3 P90 BE90L2**		131
472	42	2.5	6.1	1820	**C222_6.1 S3 ME3LA2**		126	**C222_6.1 P90 BE90L2**		127
497	40	3.2	2.9	2700	**C322_2.9 S3 ME3LA4**	**C322_2.9 S3 MX3LA4**	130	**C322_2.9 P100 BE100LA4**	**C322_2.9 P100 BX100LA4**	131
513	39	2.6	5.6	1770	**C222_5.6 S3 ME3LA2**		126	**C222_5.6 P90 BE90L2**		127
517	39	1.0	2.8	690	**C122_2.8 S3 ME3LA4**	**C122_2.8 S3 MX3LA4**	122	**C122_2.8 P100 BE100LA4**	**C122_2.8 P100 BX100LA4**	123
525	38	2.1	2.7	1770	**C222_2.7 S3 ME3LA4**	**C222_2.7 S3 MX3LA4**	126	**C222_2.7 P100 BE100LA4**	**C222_2.7 P100 BX100LA4**	127
602	33	3.0	4.8	1720	**C222_4.8 S3 ME3LA2**		126	**C222_4.8 P90 BE90L2**		127
674	30	3.2	4.3	1670	**C222_4.3 S3 ME3LA2**		126	**C222_4.3 P90 BE90L2**		127
774	26	3.5	3.7	1620	**C222_3.7 S3 ME3LA2**		126	**C222_3.7 P90 BE90L2**		127
786	25	1.7	3.7	970	**C122_3.7 S3 ME3LA2**		122	**C122_3.7 P90 BE90L2**		123
863	23	3.7	3.3	1550	**C222_3.3 S3 ME3LA2**		126	**C222_3.3 P90 BE90L2**		127
895	22	1.8	3.2	940	**C122_3.2 S3 ME3LA2**		122	**C122_3.2 P90 BE90L2**		123
1037	19	1.9	2.8	920	**C122_2.8 S3 ME3LA2**		122	**C122_2.8 P90 BE90L2**		123
1054	19	4.2	2.7	1490	**C222_2.7 S3 ME3LA2**		126	**C222_2.7 P90 BE90L2**		127

3 kW

n_2 min^{-1}	M_2 Nm	S	i	R_{n2} N	IE2	IE3		IE2	IEC IE3	
2.0	12965	0.9	720.3	85000	**C1004_720.3 S3 ME3LB4**	**C1004_720.3 S3 MX3LB4**	159	**C1004_720.3 P100 BE100LB4**	**C1004_720.3 P100 BX100LB4**	160
2.3	11293	1.1	627.4	85000	**C1004_627.4 S3 ME3LB4**	**C1004_627.4 S3 MX3LB4**	159	**C1004_627.4 P100 BE100LB4**	**C1004_627.4 P100 BX100LB4**	160
2.5	10487	1.1	582.6	85000	**C1004_582.6 S3 ME3LB4**	**C1004_582.6 S3 MX3LB4**	159	**C1004_582.6 P100 BE100LB4**	**C1004_582.6 P100 BX100LB4**	160
2.9	9047	1.3	502.6	85000	**C1004_502.6 S3 ME3LB4**	**C1004_502.6 S3 MX3LB4**	159	**C1004_502.6 P100 BE100LB4**	**C1004_502.6 P100 BX100LB4**	160
3.1	8401	1.4	466.7	85000	**C1004_466.7 S3 ME3LB4**	**C1004_466.7 S3 MX3LB4**	159	**C1004_466.7 P100 BE100LB4**	**C1004_466.7 P100 BX100LB4**	160
3.4	7543	1.0	419.0	60000	**C904_419.0 S3 ME3LB4**	**C904_419.0 S3 MX3LB4**	156	**C904_419.0 P100 BE100LB4**	**C904_419.0 P100 BX100LB4**	157
3.5	7376	1.6	409.8	85000	**C1004_409.8 S3 ME3LB4**	**C1004_409.8 S3 MX3LB4**	159	**C1004_409.8 P100 BE100LB4**	**C1004_409.8 P100 BX100LB4**	160
3.8	6849	1.8	380.5	85000	**C1004_380.5 S3 ME3LB4**	**C1004_380.5 S3 MX3LB4**	159	**C1004_380.5 P100 BE100LB4**	**C1004_380.5 P100 BX100LB4**	160
3.9	6656	1.1	369.8	60000	**C904_369.8 S3 ME3LB4**	**C904_369.8 S3 MX3LB4**	156	**C904_369.8 P100 BE100LB4**	**C904_369.8 P100 BX100LB4**	157
4.2	6101	1.2	339.0	60000	**C904_339.0 S3 ME3LB4**	**C904_339.0 S3 MX3LB4**	156	**C904_339.0 P100 BE100LB4**	**C904_339.0 P100 BX100LB4**	157
4.4	5825	2.1	323.6	85000	**C1004_323.6 S3 ME3LB4**	**C1004_323.6 S3 MX3LB4**	159	**C1004_323.6 P100 BE100LB4**	**C1004_323.6 P100 BX100LB4**	160
4.8	5409	2.2	300.5	85000	**C1004_300.5 S3 ME3LB4**	**C1004_300.5 S3 MX3LB4**	159	**C1004_300.5 P100 BE100LB4**	**C1004_300.5 P100 BX100LB4**	160
4.9	5272	1.4	292.9	60000	**C904_292.9 S3 ME3LB4**	**C904_292.9 S3 MX3LB4**	156	**C904_292.9 P100 BE100LB4**	**C904_292.9 P100 BX100LB4**	157
5.4	4833	1.5	268.5	60000	**C904_268.5 S3 ME3LB4**	**C904_268.5 S3 MX3LB4**	156	**C904_268.5 P100 BE100LB4**	**C904_268.5 P100 BX100LB4**	157
5.5	4734	2.5	263.0	85000	**C1004_263.0 S3 ME3LB4**	**C1004_263.0 S3 MX3LB4**	159	**C1004_263.0 P100 BE100LB4**	**C1004_263.0 P100 BX100LB4**	160
5.9	4396	2.7	244.2	85000	**C1004_244.2 S3 ME3LB4**	**C1004_244.2 S3 MX3LB4**	159	**C1004_244.2 P100 BE100LB4**	**C1004_244.2 P100 BX100LB4**	160
6.2	4170	1.7	231.7	60000	**C904_231.7 S3 ME3LB4**	**C904_231.7 S3 MX3LB4**	156	**C904_231.7 P100 BE100LB4**	**C904_231.7 P100 BX100LB4**	157
6.7	4015	1.0	215.8	35000	**C803_215.8 S3 ME3LB4**	**C803_215.8 S3 MX3LB4**	153	**C803_215.8 P100 BE100LB4**	**C803_215.8 P100 BX100LB4**	154
6.8	3823	1.9	212.4	60000	**C904_212.4 S3 ME3LB4**	**C904_212.4 S3 MX3LB4**	156	**C904_212.4 P100 BE100LB4**	**C904_212.4 P100 BX100LB4**	157
7.3	3680	1.0	197.9	35000	**C803_197.9 S3 ME3LB4**	**C803_197.9 S3 MX3LB4**	153	**C803_197.9 P100 BE100LB4**	**C803_197.9 P100 BX100LB4**	154
7.8	3429	1.2	184.4	35000	**C803_184.4 S3 ME3LB4**	**C803_184.4 S3 MX3LB4**	153	**C803_184.4 P100 BE100LB4**	**C803_184.4 P100 BX100LB4**	154
8.4	3201	2.2	172.1	60000	**C903_172.1 S3 ME3LB4**	**C903_172.1 S3 MX3LB4**	156	**C903_172.1 P100 BE100LB4**	**C903_172.1 P100 BX100LB4**	157
8.5	3143	1.3	169.0	35000	**C803_169.0 S3 ME3LB4**	**C803_169.0 S3 MX3LB4**	153	**C803_169.0 P100 BE100LB4**	**C803_169.0 P100 BX100LB4**	154
9.1	2934	2.4	157.8	60000	**C903_157.8 S3 ME3LB4**	**C903_157.8 S3 MX3LB4**	156	**C903_157.8 P100 BE100LB4**	**C903_157.8 P100 BX100LB4**	157
9.7	2773	1.4	149.1	35000	**C803_149.1 S3 ME3LB4**	**C803_149.1 S3 MX3LB4**	153	**C803_149.1 P100 BE100LB4**	**C803_149.1 P100 BX100LB4**	154
9.8	2722	2.6	146.3	60000	**C903_146.3 S3 ME3LB4**	**C903_146.3 S3 MX3LB4**	156	**C903_146.3 P100 BE100LB4**	**C903_146.3 P100 BX100LB4**	157
10.5	2542	1.6	136.7	35000	**C803_136.7 S3 ME3LB4**	**C803_136.7 S3 MX3LB4**	153	**C803_136.7 P100 BE100LB4**	**C803_136.7 P100 BX100LB4**	154
10.7	2495	2.8	134.1	60000	**C903_134.1 S3 ME3LB4**	**C903_134.1 S3 MX3LB4**	156	**C903_134.1 P100 BE100LB4**	**C903_134.1 P100 BX100LB4**	157
11.4	2359	1.0	126.8	25000	**C703_126.8 S3 ME3LB4**	**C703_126.8 S3 MX3LB4**	150	**C703_126.8 P100 BE100LB4**	**C703_126.8 P100 BX100LB4**	151
12.1	2222	1.8	119.5	35000	**C803_119.5 S3 ME3LB4**	**C803_119.5 S3 MX3LB4**	153	**C803_119.5 P100 BE100LB4**	**C803_119.5 P100 BX100LB4**	154

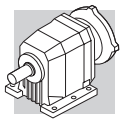

3 kW

n_2 min-1	M_2 Nm	S	i	R_{n2} N	IE2	IE3		IEC IE2	IEC IE3	
12.3	2171	3.3	116.7	60000	**C903_116.7 S3 ME3LB4**	**C903_116.7 S3 MX3LB4**	156	**C903_116.7 P100 BE100LB4**	**C903_116.7 P100 BX100LB4**	157
12.8	2091	1.1	112.4	25000	**C703_112.4 S3 ME3LB4**	**C703_112.4 S3 MX3LB4**	150	**C703_112.4 P100 BE100LB4**	**C703_112.4 P100 BX100LB4**	151
13.2	2037	2.0	109.5	35000	**C803_109.5 S3 ME3LB4**	**C803_109.5 S3 MX3LB4**	153	**C803_109.5 P100 BE100LB4**	**C803_109.5 P100 BX100LB4**	154
13.9	1931	1.2	103.8	25000	**C703_103.8 S3 ME3LB4**	**C703_103.8 S3 MX3LB4**	150	**C703_103.8 P100 BE100LB4**	**C703_103.8 P100 BX100LB4**	151
14.8	1811	2.2	97.4	35000	**C803_97.4 S3 ME3LB4**	**C803_97.4 S3 MX3LB4**	153	**C803_97.4 P100 BE100LB4**	**C803_97.4 P100 BX100LB4**	154
15.8	1638	1.0	91.0	16000	**C613_91.0 S3 ME3LB4**	**C613_91.0 S3 MX3LB4**	146	**C613_91.0 P100 BE100LB4**	**C613_91.0 P100 BX100LB4**	147
16.1	1660	2.4	89.3	35000	**C803_89.3 S3 ME3LB4**	**C803_89.3 S3 MX3LB4**	153	**C803_89.3 P100 BE100LB4**	**C803_89.3 P100 BX100LB4**	154
16.3	1640	1.4	88.2	25000	**C703_88.2 S3 ME3LB4**	**C703_88.2 S3 MX3LB4**	150	**C703_88.2 P100 BE100LB4**	**C703_88.2 P100 BX100LB4**	151
17.3	1495	1.1	83.0	16000	**C613_83.0 S3 ME3LB4**	**C613_83.0 S3 MX3LB4**	146	**C613_83.0 P100 BE100LB4**	**C613_83.0 P100 BX100LB4**	147
17.7	1514	1.5	81.4	25000	**C703_81.4 S3 ME3LB4**	**C703_81.4 S3 MX3LB4**	150	**C703_81.4 P100 BE100LB4**	**C703_81.4 P100 BX100LB4**	151
18.7	1431	2.8	76.9	35000	**C803_76.9 S3 ME3LB4**	**C803_76.9 S3 MX3LB4**	153	**C803_76.9 P100 BE100LB4**	**C803_76.9 P100 BX100LB4**	154
19.4	1336	1.2	74.2	16000	**C613_74.2 S3 ME3LB4**	**C613_74.2 S3 MX3LB4**	146	**C613_74.2 P100 BE100LB4**	**C613_74.2 P100 BX100LB4**	147
20.2	1327	1.7	71.3	25000	**C703_71.3 S3 ME3LB4**	**C703_71.3 S3 MX3LB4**	150	**C703_71.3 P100 BE100LB4**	**C703_71.3 P100 BX100LB4**	151
20.4	1311	3.1	70.5	35000	**C803_70.5 S3 ME3LB4**	**C803_70.5 S3 MX3LB4**	153	**C803_70.5 P100 BE100LB4**	**C803_70.5 P100 BX100LB4**	154
21.3	1218	1.3	67.7	16000	**C613_67.7 S3 ME3LB4**	**C613_67.7 S3 MX3LB4**	146	**C613_67.7 P100 BE100LB4**	**C613_67.7 P100 BX100LB4**	147
21.9	1225	1.9	65.9	25000	**C703_65.9 S3 ME3LB4**	**C703_65.9 S3 MX3LB4**	150	**C703_65.9 P100 BE100LB4**	**C703_65.9 P100 BX100LB4**	151
24.4	1097	0.9	59.0	10000	**C513_59.0 S3 ME3LB4**	**C513_59.0 S3 MX3LB4**	142	**C513_59.0 P100 BE100LB4**	**C513_59.0 P100 BX100LB4**	143
24.6	1055	1.5	58.6	16000	**C613_58.6 S3 ME3LB4**	**C613_58.6 S3 MX3LB4**	146	**C613_58.6 P100 BE100LB4**	**C613_58.6 P100 BX100LB4**	147
25.5	1051	2.2	56.5	25000	**C703_56.5 S3 ME3LB4**	**C703_56.5 S3 MX3LB4**	150	**C703_56.5 P100 BE100LB4**	**C703_56.5 P100 BX100LB4**	151
26.9	962	1.7	53.5	16000	**C613_53.5 S3 ME3LB4**	**C613_53.5 S3 MX3LB4**	146	**C613_53.5 P100 BE100LB4**	**C613_53.5 P100 BX100LB4**	147
27.6	970	2.4	52.2	25000	**C703_52.2 S3 ME3LB4**	**C703_52.2 S3 MX3LB4**	150	**C703_52.2 P100 BE100LB4**	**C703_52.2 P100 BX100LB4**	151
28.1	952	1.1	51.2	10000	**C513_51.2 S3 ME3LB4**	**C513_51.2 S3 MX3LB4**	142	**C513_51.2 P100 BE100LB4**	**C513_51.2 P100 BX100LB4**	143
30	857	1.9	47.6	16000	**C613_47.6 S3 ME3LB4**	**C613_47.6 S3 MX3LB4**	146	**C613_47.6 P100 BE100LB4**	**C613_47.6 P100 BX100LB4**	147
31	869	1.2	46.7	10000	**C513_46.7 S3 ME3LB4**	**C513_46.7 S3 MX3LB4**	142	**C513_46.7 P100 BE100LB4**	**C513_46.7 P100 BX100LB4**	143
32	831	2.8	44.7	25000	**C703_44.7 S3 ME3LB4**	**C703_44.7 S3 MX3LB4**	150	**C703_44.7 P100 BE100LB4**	**C703_44.7 P100 BX100LB4**	151
33	782	2.0	43.4	16000	**C613_43.4 S3 ME3LB4**	**C613_43.4 S3 MX3LB4**	146	**C613_43.4 P100 BE100LB4**	**C613_43.4 P100 BX100LB4**	147
33	819	0.9	43.1	10000	**C512_43.1 S3 ME3LB4**	**C512_43.1 S3 MX3LB4**	142	**C512_43.1 P100 BE100LB4**	**C512_43.1 P100 BX100LB4**	143
35	767	3.0	41.3	25000	**C703_41.3 S3 ME3LB4**	**C703_41.3 S3 MX3LB4**	150	**C703_41.3 P100 BE100LB4**	**C703_41.3 P100 BX100LB4**	151
36	753	1.3	40.5	10000	**C513_40.5 S3 ME3LB4**	**C513_40.5 S3 MX3LB4**	142	**C513_40.5 P100 BE100LB4**	**C513_40.5 P100 BX100LB4**	143
36	767	1.0	40.4	10000	**C512_40.4 S3 ME3LB4**	**C512_40.4 S3 MX3LB4**	142	**C512_40.4 P100 BE100LB4**	**C512_40.4 P100 BX100LB4**	143
38	722	1.9	38.0	16000	**C612_38.0 S3 ME3LB4**	**C612_38.0 S3 MX3LB4**	146	**C612_38.0 P100 BE100LB4**	**C612_38.0 P100 BX100LB4**	147
39	687	1.5	37.0	10000	**C513_37.0 S3 ME3LB4**	**C513_37.0 S3 MX3LB4**	142	**C513_37.0 P100 BE100LB4**	**C513_37.0 P100 BX100LB4**	143
40	691	1.1	36.4	10000	**C512_36.4 S3 ME3LB4**	**C512_36.4 S3 MX3LB4**	142	**C512_36.4 P100 BE100LB4**	**C512_36.4 P100 BX100LB4**	143
40	651	2.4	36.1	16000	**C613_36.1 S3 ME3LB4**	**C613_36.1 S3 MX3LB4**	146	**C613_36.1 P100 BE100LB4**	**C613_36.1 P100 BX100LB4**	147
42	650	1.9	34.2	16000	**C612_34.2 S3 ME3LB4**	**C612_34.2 S3 MX3LB4**	146	**C612_34.2 P100 BE100LB4**	**C612_34.2 P100 BX100LB4**	147
44	628	1.3	33.0	10000	**C512_33.0 S3 ME3LB4**	**C512_33.0 S3 MX3LB4**	142	**C512_33.0 P100 BE100LB4**	**C512_33.0 P100 BX100LB4**	143
44	594	2.6	33.0	16000	**C613_33.0 S3 ME3LB4**	**C613_33.0 S3 MX3LB4**	146	**C613_33.0 P100 BE100LB4**	**C613_33.0 P100 BX100LB4**	147
46	581	1.0	31.2	5550	**C413_31.2 S3 ME3LB4**	**C413_31.2 S3 MX3LB4**	138	**C413_31.2 P100 BE100LB4**	**C413_31.2 P100 BX100LB4**	139
47	578	2.3	30.4	15900	**C612_30.4 S3 ME3LB4**	**C612_30.4 S3 MX3LB4**	146	**C612_30.4 P100 BE100LB4**	**C612_30.4 P100 BX100LB4**	147
48	559	1.8	30.1	10000	**C513_30.1 S3 ME3LB4**	**C513_30.1 S3 MX3LB4**	142	**C513_30.1 P100 BE100LB4**	**C513_30.1 P100 BX100LB4**	143
48	566	1.4	29.8	10000	**C512_29.8 S3 ME3LB4**	**C512_29.8 S3 MX3LB4**	142	**C512_29.8 P100 BE100LB4**	**C512_29.8 P100 BX100LB4**	143
51	538	0.9	28.3	5460	**C412_28.3 S3 ME3LB4**	**C412_28.3 S3 MX3LB4**	138	**C412_28.3 P100 BE100LB4**	**C412_28.3 P100 BX100LB4**	139
52	511	1.9	27.4	10000	**C513_27.4 S3 ME3LB4**	**C513_27.4 S3 MX3LB4**	142	**C513_27.4 P100 BE100LB4**	**C513_27.4 P100 BX100LB4**	143
53	521	2.6	27.4	15400	**C612_27.4 S3 ME3LB4**	**C612_27.4 S3 MX3LB4**	146	**C612_27.4 P100 BE100LB4**	**C612_27.4 P100 BX100LB4**	147
55	487	0.9	26.2	4500	**C363_26.2 S3 ME3LB4**	**C363_26.2 S3 MX3LB4**	134	**C363_26.2 P100 BE100LB4**	**C363_26.2 P100 BX100LB4**	135
56	492	1.6	25.9	10000	**C512_25.9 S3 ME3LB4**	**C512_25.9 S3 MX3LB4**	142	**C512_25.9 P100 BE100LB4**	**C512_25.9 P100 BX100LB4**	143
57	476	1.1	25.0	5480	**C412_25.0 S3 ME3LB4**	**C412_25.0 S3 MX3LB4**	138	**C412_25.0 P100 BE100LB4**	**C412_25.0 P100 BX100LB4**	139
58	472	2.9	24.8	15100	**C612_24.8 S3 ME3LB4**	**C612_24.8 S3 MX3LB4**	146	**C612_24.8 P100 BE100LB4**	**C612_24.8 P100 BX100LB4**	147
62	444	1.8	23.4	10000	**C512_23.4 S3 ME3LB4**	**C512_23.4 S3 MX3LB4**	142	**C512_23.4 P100 BE100LB4**	**C512_23.4 P100 BX100LB4**	143
64	429	1.2	22.6	5420	**C412_22.6 S3 ME3LB4**	**C412_22.6 S3 MX3LB4**	138	**C412_22.6 P100 BE100LB4**	**C412_22.6 P100 BX100LB4**	139
64	425	3.2	22.4	14600	**C612_22.4 S3 ME3LB4**	**C612_22.4 S3 MX3LB4**	146	**C612_22.4 P100 BE100LB4**	**C612_22.4 P100 BX100LB4**	147
65	412	1.0	22.1	4530	**C363_22.1 S3 ME3LB4**	**C363_22.1 S3 MX3LB4**	134	**C363_22.1 P100 BE100LB4**	**C363_22.1 P100 BX100LB4**	135
69	398	2.0	21.0	10000	**C512_21.0 S3 ME3LB4**	**C512_21.0 S3 MX3LB4**	142	**C512_21.0 P100 BE100LB4**	**C512_21.0 P100 BX100LB4**	143
73	375	1.3	19.8	5390	**C412_19.8 S3 ME3LB4**	**C412_19.8 S3 MX3LB4**	138	**C412_19.8 P100 BE100LB4**	**C412_19.8 P100 BX100LB4**	139
76	361	1.1	19.0	4450	**C362_19.0 S3 ME3LB4**	**C362_19.0 S3 MX3LB4**	134	**C362_19.0 P100 BE100LB4**	**C362_19.0 P100 BX100LB4**	135
76	359	2.2	18.9	10000	**C512_18.9 S3 ME3LB4**	**C512_18.9 S3 MX3LB4**	142	**C512_18.9 P100 BE100LB4**	**C512_18.9 P100 BX100LB4**	143
81	338	1.4	17.8	5300	**C412_17.8 S3 ME3LB4**	**C412_17.8 S3 MX3LB4**	138	**C412_17.8 P100 BE100LB4**	**C412_17.8 P100 BX100LB4**	139

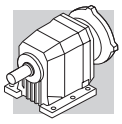

3 kW

n_2 min-1	M_2 Nm	S	i	R_{n2} N	IE2	IE3		IE2	IE3	
84	327	1.2	17.2	4400	**C362_17.2 S3 ME3LB4**	**C362_17.2 S3 MX3LB4**	134	**C362_17.2 P100 BE100LB4**	**C362_17.2 P100 BX100LB4**	135
87	315	2.5	16.6	9790	**C512_16.6 S3 ME3LB4**	**C512_16.6 S3 MX3LB4**	142	**C512_16.6 P100 BE100LB4**	**C512_16.6 P100 BX100LB4**	143
91	301	1.5	15.8	5240	**C412_15.8 S3 ME3LB4**	**C412_15.8 S3 MX3LB4**	138	**C412_15.8 P100 BE100LB4**	**C412_15.8 P100 BX100LB4**	139
92	296	0.9	15.6	3680	**C322_15.6 S3 ME3LB4**	**C322_15.6 S3 MX3LB4**	130	**C322_15.6 P100 BE100LB4**	**C322_15.6 P100 BX100LB4**	131
96	284	2.8	15.0	9540	**C512_15.0 S3 ME3LB4**	**C512_15.0 S3 MX3LB4**	142	**C512_15.0 P100 BE100LB4**	**C512_15.0 P100 BX100LB4**	143
98	280	1.4	14.8	4340	**C362_14.8 S3 ME3LB4**	**C362_14.8 S3 MX3LB4**	134	**C362_14.8 P100 BE100LB4**	**C362_14.8 P100 BX100LB4**	135
101	271	1.6	14.2	5140	**C412_14.2 S3 ME3LB4**	**C412_14.2 S3 MX3LB4**	138	**C412_14.2 P100 BE100LB4**	**C412_14.2 P100 BX100LB4**	139
102	267	0.9	14.1	3650	**C322_14.1 S3 ME3LB4**	**C322_14.1 S3 MX3LB4**	130	**C322_14.1 P100 BE100LB4**	**C322_14.1 P100 BX100LB4**	131
108	253	1.5	13.3	4260	**C362_13.3 S3 ME3LB4**	**C362_13.3 S3 MX3LB4**	134	**C362_13.3 P100 BE100LB4**	**C362_13.3 P100 BX100LB4**	135
110	249	3.0	13.1	9200	**C512_13.1 S3 ME3LB4**	**C512_13.1 S3 MX3LB4**	142	**C512_13.1 P100 BE100LB4**	**C512_13.1 P100 BX100LB4**	143
116	235	1.8	12.4	5040	**C412_12.4 S3 ME3LB4**	**C412_12.4 S3 MX3LB4**	138	**C412_12.4 P100 BE100LB4**	**C412_12.4 P100 BX100LB4**	139
117	234	1.0	12.3	3580	**C322_12.3 S3 ME3LB4**	**C322_12.3 S3 MX3LB4**	130	**C322_12.3 P100 BE100LB4**	**C322_12.3 P100 BX100LB4**	131
123	222	1.7	11.7	4200	**C362_11.7 S3 ME3LB4**	**C362_11.7 S3 MX3LB4**	134	**C362_11.7 P100 BE100LB4**	**C362_11.7 P100 BX100LB4**	135
129	213	1.1	11.2	3520	**C322_11.2 S3 ME3LB4**	**C322_11.2 S3 MX3LB4**	130	**C322_11.2 P100 BE100LB4**	**C322_11.2 P100 BX100LB4**	131
129	212	2.0	11.2	4930	**C412_11.2 S3 ME3LB4**	**C412_11.2 S3 MX3LB4**	138	**C412_11.2 P100 BE100LB4**	**C412_11.2 P100 BX100LB4**	139
136	201	1.9	10.6	4100	**C362_10.6 S3 ME3LB4**	**C362_10.6 S3 MX3LB4**	134	**C362_10.6 P100 BE100LB4**	**C362_10.6 P100 BX100LB4**	135
143	190	1.6	20.1	3480	**C322_20.1 S3 ME3LB2**		130	**C322_20.1 P100 BE100L2**		131
150	182	2.1	9.6	4800	**C412_9.6 S3 ME3LB4**	**C412_9.6 S3 MX3LB4**	138	**C412_9.6 P100 BE100LB4**	**C412_9.6 P100 BX100LB4**	139
155	177	1.2	9.3	3450	**C322_9.3 S3 ME3LB4**	**C322_9.3 S3 MX3LB4**	130	**C322_9.3 P100 BE100LB4**	**C322_9.3 P100 BX100LB4**	131
158	172	1.6	18.2	3410	**C322_18.2 S3 ME3LB2**		130	**C322_18.2 P100 BE100L2**		131
164	167	2.3	8.8	3990	**C362_8.8 S3 ME3LB4**	**C362_8.8 S3 MX3LB4**	134	**C362_8.8 P100 BE100LB4**	**C362_8.8 P100 BX100LB4**	135
167	164	2.3	8.6	4600	**C412_8.6 S3 ME3LB4**	**C412_8.6 S3 MX3LB4**	138	**C412_8.6 P100 BE100LB4**	**C412_8.6 P100 BX100LB4**	139
170	161	1.3	8.5	3400	**C322_8.5 S3 ME3LB4**	**C322_8.5 S3 MX3LB4**	130	**C322_8.5 P100 BE100LB4**	**C322_8.5 P100 BX100LB4**	131
179	153	2.4	8.0	3840	**C362_8.0 S3 ME3LB4**	**C362_8.0 S3 MX3LB4**	134	**C362_8.0 P100 BE100LB4**	**C362_8.0 P100 BX100LB4**	135
182	150	1.2	15.8	1940	**C222_15.8 S3 ME3LB2**		126	**C222_15.8 P100 BE100L2**		127
185	147	1.8	15.6	3340	**C322_15.6 S3 ME3LB2**		130	**C322_15.6 P100 BE100L2**		131
201	136	1.5	7.2	3300	**C322_7.2 S3 ME3LB4**	**C322_7.2 S3 MX3LB4**	130	**C322_7.2 P100 BE100LB4**	**C322_7.2 P100 BX100LB4**	131
203	135	1.0	7.1	1940	**C222_7.1 S3 ME3LB4**	**C222_7.1 S3 MX3LB4**	126	**C222_7.1 P100 BE100LB4**	**C222_7.1 P100 BX100LB4**	127
204	134	2.6	7.1	4490	**C412_7.1 S3 ME3LB4**	**C412_7.1 S3 MX3LB4**	138	**C412_7.1 P100 BE100LB4**	**C412_7.1 P100 BX100LB4**	139
205	133	1.9	14.1	3250	**C322_14.1 S3 ME3LB2**		130	**C322_14.1 P100 BE100L2**		131
212	129	2.8	6.8	3780	**C362_6.8 S3 ME3LB4**	**C362_6.8 S3 MX3LB4**	134	**C362_6.8 P100 BE100LB4**	**C362_6.8 P100 BX100LB4**	135
226	121	2.9	6.4	4370	**C412_6.4 S3 ME3LB4**	**C412_6.4 S3 MX3LB4**	138	**C412_6.4 P100 BE100LB4**	**C412_6.4 P100 BX100LB4**	139
230	119	1.3	6.3	3100	**C322_6.3 S3 ME3LB4**	**C322_6.3 S3 MX3LB4**	130	**C322_6.3 P100 BE100LB4**	**C322_6.3 P100 BX100LB4**	131
234	116	2.1	12.3	3190	**C322_12.3 S3 ME3LB2**		130	**C322_12.3 P100 BE100L2**		131
237	116	0.9	6.1	1600	**C222_6.1 S3 ME3LB4**	**C222_6.1 S3 MX3LB4**	126	**C222_6.1 P100 BE100LB4**	**C222_6.1 P100 BX100LB4**	127
242	113	2.3	6.0	4090	**C412_6.0 S3 ME3LB4**	**C412_6.0 S3 MX3LB4**	138	**C412_6.0 P100 BE100LB4**	**C412_6.0 P100 BX100LB4**	139
246	111	1.8	5.8	3530	**C362_5.8 S3 ME3LB4**	**C362_5.8 S3 MX3LB4**	134	**C362_5.8 P100 BE100LB4**	**C362_5.8 P100 BX100LB4**	135
255	107	1.4	5.7	3040	**C322_5.7 S3 ME3LB4**	**C322_5.7 S3 MX3LB4**	130	**C322_5.7 P100 BE100LB4**	**C322_5.7 P100 BX100LB4**	131
257	106	2.2	11.2	3090	**C322_11.2 S3 ME3LB2**		130	**C322_11.2 P100 BE100L2**		131
258	106	1.0	5.6	1750	**C222_5.6 S3 ME3LB4**	**C222_5.6 S3 MX3LB4**	126	**C222_5.6 P100 BE100LB4**	**C222_5.6 P100 BX100LB4**	127
260	105	1.5	11.1	1850	**C222_11.1 S3 ME3LB2**		126	**C222_11.1 P100 BE100L2**		127
273	100	2.0	5.3	3380	**C362_5.3 S3 ME3LB4**	**C362_5.3 S3 MX3LB4**	134	**C362_5.3 P100 BE100LB4**	**C362_5.3 P100 BX100LB4**	135
291	94	1.6	5.0	2950	**C322_5.0 S3 ME3LB4**	**C322_5.0 S3 MX3LB4**	130	**C322_5.0 P100 BE100LB4**	**C322_5.0 P100 BX100LB4**	131
299	91	1.6	9.6	1880	**C222_9.6 S3 ME3LB2**		126	**C222_9.6 P100 BE100L2**		127
302	91	1.1	4.8	1780	**C222_4.8 S3 ME3LB4**	**C222_4.8 S3 MX3LB4**	126	**C222_4.8 P100 BE100LB4**	**C222_4.8 P100 BX100LB4**	127
309	89	2.9	4.7	3880	**C412_4.7 S3 ME3LB4**	**C412_4.7 S3 MX3LB4**	138	**C412_4.7 P100 BE100LB4**	**C412_4.7 P100 BX100LB4**	139
310	88	2.5	9.3	2990	**C322_9.3 S3 ME3LB2**		130	**C322_9.3 P100 BE100L2**		131
312	88	2.3	4.6	3270	**C362_4.6 S3 ME3LB4**	**C362_4.6 S3 MX3LB4**	134	**C362_4.6 P100 BE100LB4**	**C362_4.6 P100 BX100LB4**	135
320	85	1.8	4.5	2880	**C322_4.5 S3 ME3LB4**	**C322_4.5 S3 MX3LB4**	130	**C322_4.5 P100 BE100LB4**	**C322_4.5 P100 BX100LB4**	131
333	82	1.7	8.7	1840	**C222_8.7 S3 ME3LB2**		126	**C222_8.7 P100 BE100L2**		127
338	81	1.2	4.3	1800	**C222_4.3 S3 ME3LB4**	**C222_4.3 S3 MX3LB4**	126	**C222_4.3 P100 BE100LB4**	**C222_4.3 P100 BX100LB4**	127
339	80	2.6	8.5	2900	**C322_8.5 S3 ME3LB2**		130	**C322_8.5 P100 BE100L2**		131
343	80	2.5	4.2	3190	**C362_4.2 S3 ME3LB4**	**C362_4.2 S3 MX3LB4**	134	**C362_4.2 P100 BE100LB4**	**C362_4.2 P100 BX100LB4**	135
386	71	2.1	3.7	2780	**C322_3.7 S3 ME3LB4**	**C322_3.7 S3 MX3LB4**	130	**C322_3.7 P100 BE100LB4**	**C322_3.7 P100 BX100LB4**	131
388	70	1.3	3.7	1740	**C222_3.7 S3 ME3LB4**	**C222_3.7 S3 MX3LB4**	126	**C222_3.7 P100 BE100LB4**	**C222_3.7 P100 BX100LB4**	127
402	68	3.0	7.2	2810	**C322_7.2 S3 ME3LB2**		130	**C322_7.2 P100 BE100L2**		131
407	67	1.9	7.1	1800	**C222_7.1 S3 ME3LB2**		126	**C222_7.1 P100 BE100L2**		127

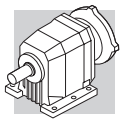

3 kW

n_2 min^{-1}	M_2 Nm	S	i	R_{n2} N	IE2	IE3		IEC IE2	IEC IE3	
413	66	3.0	3.5	3130	**C362_3.5 S3 ME3LB4**	**C362_3.5 S3 MX3LB4**	134	**C362_3.5 P100 BE100LB4**	**C362_3.5 P100 BX100LB4**	135
422	65	2.1	3.4	2690	**C322_3.4 S3 ME3LB4**	**C322_3.4 S3 MX3LB4**	130	**C322_3.4 P100 BE100LB4**	**C322_3.4 P100 BX100LB4**	131
433	63	1.3	3.3	1740	**C222_3.3 S3 ME3LB4**	**C222_3.3 S3 MX3LB4**	126	**C222_3.3 P100 BE100LB4**	**C222_3.3 P100 BX100LB4**	127
460	59	2.6	6.3	2650	**C322_6.3 S3 ME3LB2**		130	**C322_6.3 P100 BE100L2**		131
473	58	1.8	6.1	1690	**C222_6.1 S3 ME3LB2**		126	**C222_6.1 P100 BE100L2**		127
500	55	2.4	2.9	2610	**C322_2.9 S3 ME3LB4**	**C322_2.9 S3 MX3LB4**	130	**C322_2.9 P100 BE100LB4**	**C322_2.9 P100 BX100LB4**	131
509	53	2.9	5.7	2570	**C322_5.7 S3 ME3LB2**		130	**C322_5.7 P100 BE100L2**		131
515	53	1.9	5.6	1650	**C222_5.6 S3 ME3LB2**		126	**C222_5.6 P100 BE100L2**		127
529	52	1.5	2.7	1660	**C222_2.7 S3 ME3LB4**	**C222_2.7 S3 MX3LB4**	126	**C222_2.7 P100 BE100LB4**	**C222_2.7 P100 BX100LB4**	127
582	47	3.3	5.0	2500	**C322_5.0 S3 ME3LB2**		130	**C322_5.0 P100 BE100L2**		131
604	45	2.2	4.8	1620	**C222_4.8 S3 ME3LB2**		126	**C222_4.8 P100 BE100L2**		127
640	43	3.6	4.5	2400	**C322_4.5 S3 ME3LB2**		130	**C322_4.5 P100 BE100L2**		131
676	40	2.3	4.3	1580	**C222_4.3 S3 ME3LB2**		126	**C222_4.3 P100 BE100L2**		127
771	35	4.2	3.7	2320	**C322_3.7 S3 ME3LB2**		130	**C322_3.7 P100 BE100L2**		131
777	35	2.6	3.7	1540	**C222_3.7 S3 ME3LB2**		126	**C222_3.7 P100 BE100L2**		127
789	35	1.2	3.7	560	**C122_3.7 S3 ME3LB2**		122	**C122_3.7 P100 BE100L2**		123
866	31	2.7	3.3	1480	**C222_3.3 S3 ME3LB2**		126	**C222_3.3 P100 BE100L2**		127
898	30	1.3	3.2	630	**C122_3.2 S3 ME3LB2**		122	**C122_3.2 P100 BE100L2**		123
1041	26	1.4	2.8	750	**C122_2.8 S3 ME3LB2**		122	**C122_2.8 P100 BE100L2**		123
1058	26	3.1	2.7	1430	**C222_2.7 S3 ME3LB2**		126	**C222_2.7 P100 BE100L2**		127

4 kW

n_2 min^{-1}	M_2 Nm	S	i	R_{n2} N	IE2	IE3		IEC IE2	IEC IE3	
2.9	12214	1.0	502.6	85000	**C1004_502.6 S4 ME4SA4**	**C1004_502.6 S4 MX4SA4**	159	**C1004_502.6 P112 BE112M4**	**C1004_502.6 P112 BX112M4**	160
3.1	11342	1.1	466.7	85000	**C1004_466.7 S4 ME4SA4**	**C1004_466.7 S4 MX4SA4**	159	**C1004_466.7 P112 BE112M4**	**C1004_466.7 P112 BX112M4**	160
3.5	9957	1.2	409.8	85000	**C1004_409.8 S4 ME4SA4**	**C1004_409.8 S4 MX4SA4**	159	**C1004_409.8 P112 BE112M4**	**C1004_409.8 P112 BX112M4**	160
3.8	9246	1.3	380.5	85000	**C1004_380.5 S4 ME4SA4**	**C1004_380.5 S4 MX4SA4**	159	**C1004_380.5 P112 BE112M4**	**C1004_380.5 P112 BX112M4**	160
4.4	7864	1.5	323.6	85000	**C1004_323.6 S4 ME4SA4**	**C1004_323.6 S4 MX4SA4**	159	**C1004_323.6 P112 BE112M4**	**C1004_323.6 P112 BX112M4**	160
4.8	7302	1.6	300.5	85000	**C1004_300.5 S4 ME4SA4**	**C1004_300.5 S4 MX4SA4**	159	**C1004_300.5 P112 BE112M4**	**C1004_300.5 P112 BX112M4**	160
4.9	7118	1.0	292.9	60000	**C904_292.9 S4 ME4SA4**	**C904_292.9 S4 MX4SA4**	156	**C904_292.9 P112 BE112M4**	**C904_292.9 P112 BX112M4**	157
5.4	6524	1.1	268.5	60000	**C904_268.5 S4 ME4SA4**	**C904_268.5 S4 MX4SA4**	156	**C904_268.5 P112 BE112M4**	**C904_268.5 P112 BX112M4**	157
5.5	6391	1.9	263.0	85000	**C1004_263.0 S4 ME4SA4**	**C1004_263.0 S4 MX4SA4**	159	**C1004_263.0 P112 BE112M4**	**C1004_263.0 P112 BX112M4**	160
5.9	5934	2.0	244.2	85000	**C1004_244.2 S4 ME4SA4**	**C1004_244.2 S4 MX4SA4**	159	**C1004_244.2 P112 BE112M4**	**C1004_244.2 P112 BX112M4**	160
6.2	5630	1.3	231.7	60000	**C904_231.7 S4 ME4SA4**	**C904_231.7 S4 MX4SA4**	156	**C904_231.7 P112 BE112M4**	**C904_231.7 P112 BX112M4**	157
6.8	5161	1.4	212.4	60000	**C904_212.4 S4 ME4SA4**	**C904_212.4 S4 MX4SA4**	156	**C904_212.4 P112 BE112M4**	**C904_212.4 P112 BX112M4**	157
7.2	4851	2.5	199.6	85000	**C1004_199.6 S4 ME4SA4**	**C1004_199.6 S4 MX4SA4**	159	**C1004_199.6 P112 BE112M4**	**C1004_199.6 P112 BX112M4**	160
7.8	4504	2.7	185.4	85000	**C1004_185.4 S4 ME4SA4**	**C1004_185.4 S4 MX4SA4**	159	**C1004_185.4 P112 BE112M4**	**C1004_185.4 P112 BX112M4**	160
8.4	4322	1.7	172.1	60000	**C903_172.1 S4 ME4SA4**	**C903_172.1 S4 MX4SA4**	156	**C903_172.1 P112 BE112M4**	**C903_172.1 P112 BX112M4**	157
8.5	4243	0.9	169.0	35000	**C803_169.0 S4 ME4SA4**	**C803_169.0 S4 MX4SA4**	153	**C803_169.0 P112 BE112M4**	**C803_169.0 P112 BX112M4**	154
9.1	3961	1.8	157.8	60000	**C903_157.8 S4 ME4SA4**	**C903_157.8 S4 MX4SA4**	156	**C903_157.8 P112 BE112M4**	**C903_157.8 P112 BX112M4**	157
9.7	3744	1.1	149.1	35000	**C803_149.1 S4 ME4SA4**	**C803_149.1 S4 MX4SA4**	153	**C803_149.1 P112 BE112M4**	**C803_149.1 P112 BX112M4**	154
9.8	3674	2.0	146.3	60000	**C903_146.3 S4 ME4SA4**	**C903_146.3 S4 MX4SA4**	156	**C903_146.3 P112 BE112M4**	**C903_146.3 P112 BX112M4**	157
10.5	3432	1.2	136.7	35000	**C803_136.7 S4 ME4SA4**	**C803_136.7 S4 MX4SA4**	153	**C803_136.7 P112 BE112M4**	**C803_136.7 P112 BX112M4**	154
10.7	3368	2.1	134.1	60000	**C903_134.1 S4 ME4SA4**	**C903_134.1 S4 MX4SA4**	156	**C903_134.1 P112 BE112M4**	**C903_134.1 P112 BX112M4**	157
12.1	3000	1.3	119.5	35000	**C803_119.5 S4 ME4SA4**	**C803_119.5 S4 MX4SA4**	153	**C803_119.5 P112 BE112M4**	**C803_119.5 P112 BX112M4**	154
12.3	2931	2.5	116.7	60000	**C903_116.7 S4 ME4SA4**	**C903_116.7 S4 MX4SA4**	156	**C903_116.7 P112 BE112M4**	**C903_116.7 P112 BX112M4**	157
13.2	2750	1.5	109.5	35000	**C803_109.5 S4 ME4SA4**	**C803_109.5 S4 MX4SA4**	153	**C803_109.5 P112 BE112M4**	**C803_109.5 P112 BX112M4**	154
13.5	2687	2.6	107.0	60000	**C903_107.0 S4 ME4SA4**	**C903_107.0 S4 MX4SA4**	156	**C903_107.0 P112 BE112M4**	**C903_107.0 P112 BX112M4**	157
14.8	2445	1.6	97.4	35000	**C803_97.4 S4 ME4SA4**	**C803_97.4 S4 MX4SA4**	153	**C803_97.4 P112 BE112M4**	**C803_97.4 P112 BX112M4**	154
15.0	2417	3.0	96.2	60000	**C903_96.2 S4 ME4SA4**	**C903_96.2 S4 MX4SA4**	156	**C903_96.2 P112 BE112M4**	**C903_96.2 P112 BX112M4**	157
16.1	2242	1.8	89.3	35000	**C803_89.3 S4 ME4SA4**	**C803_89.3 S4 MX4SA4**	153	**C803_89.3 P112 BE112M4**	**C803_89.3 P112 BX112M4**	154
16.3	2215	1.0	88.2	25000	**C703_88.2 S4 ME4SA4**	**C703_88.2 S4 MX4SA4**	150	**C703_88.2 P112 BE112M4**	**C703_88.2 P112 BX112M4**	151

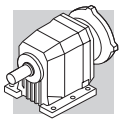

4 kW

n_2 min^{-1}	M_2 Nm	S	i	R_{n2} N	IE2	IE3		IEC IE2	IEC IE3	
17.7	2044	1.1	81.4	25000	**C703_81.4 S4 ME4SA4**	**C703_81.4 S4 MX4SA4**	150	**C703_81.4 P112 BE112M4**	**C703_81.4 P112 BX112M4**	151
18.7	1931	2.1	76.9	35000	**C803_76.9 S4 ME4SA4**	**C803_76.9 S4 MX4SA4**	153	**C803_76.9 P112 BE112M4**	**C803_76.9 P112 BX112M4**	154
20.2	1791	1.3	71.3	25000	**C703_71.3 S4 ME4SA4**	**C703_71.3 S4 MX4SA4**	150	**C703_71.3 P112 BE112M4**	**C703_71.3 P112 BX112M4**	151
20.4	1770	2.3	70.5	35000	**C803_70.5 S4 ME4SA4**	**C803_70.5 S4 MX4SA4**	153	**C803_70.5 P112 BE112M4**	**C803_70.5 P112 BX112M4**	154
21.3	1645	1.0	67.7	16000	**C613_67.7 S4 ME4SA4**	**C613_67.7 S4 MX4SA4**	146	**C613_67.7 P112 BE112M4**	**C613_67.7 P112 BX112M4**	147
21.9	1654	1.4	65.9	25000	**C703_65.9 S4 ME4SA4**	**C703_65.9 S4 MX4SA4**	150	**C703_65.9 P112 BE112M4**	**C703_65.9 P112 BX112M4**	151
23.0	1570	2.5	62.5	35000	**C803_62.5 S4 ME4SA4**	**C803_62.5 S4 MX4SA4**	153	**C803_62.5 P112 BE112M4**	**C803_62.5 P112 BX112M4**	154
24.6	1424	1.1	58.6	16000	**C613_58.6 S4 ME4SA4**	**C613_58.6 S4 MX4SA4**	146	**C613_58.6 P112 BE112M4**	**C613_58.6 P112 BX112M4**	147
25.1	1439	2.8	57.3	35000	**C803_57.3 S4 ME4SA4**	**C803_57.3 S4 MX4SA4**	153	**C803_57.3 P112 BE112M4**	**C803_57.3 P112 BX112M4**	154
25.5	1419	1.6	56.5	25000	**C703_56.5 S4 ME4SA4**	**C703_56.5 S4 MX4SA4**	150	**C703_56.5 P112 BE112M4**	**C703_56.5 P112 BX112M4**	151
26.9	1299	1.2	53.5	16000	**C613_53.5 S4 ME4SA4**	**C613_53.5 S4 MX4SA4**	146	**C613_53.5 P112 BE112M4**	**C613_53.5 P112 BX112M4**	147
27.6	1310	1.8	52.2	25000	**C703_52.2 S4 ME4SA4**	**C703_52.2 S4 MX4SA4**	150	**C703_52.2 P112 BE112M4**	**C703_52.2 P112 BX112M4**	151
30	1157	1.4	47.6	16000	**C613_47.6 S4 ME4SA4**	**C613_47.6 S4 MX4SA4**	146	**C613_47.6 P112 BE112M4**	**C613_47.6 P112 BX112M4**	147
30	1191	3.2	47.4	35000	**C803_47.4 S4 ME4SA4**	**C803_47.4 S4 MX4SA4**	153	**C803_47.4 P112 BE112M4**	**C803_47.4 P112 BX112M4**	154
32	1122	2.0	44.7	25000	**C703_44.7 S4 ME4SA4**	**C703_44.7 S4 MX4SA4**	150	**C703_44.7 P112 BE112M4**	**C703_44.7 P112 BX112M4**	151
33	1092	3.5	43.5	35000	**C803_43.5 S4 ME4SA4**	**C803_43.5 S4 MX4SA4**	153	**C803_43.5 P112 BE112M4**	**C803_43.5 P112 BX112M4**	154
33	1056	1.5	43.4	16000	**C613_43.4 S4 ME4SA4**	**C613_43.4 S4 MX4SA4**	146	**C613_43.4 P112 BE112M4**	**C613_43.4 P112 BX112M4**	147
35	1036	2.2	41.3	25000	**C703_41.3 S4 ME4SA4**	**C703_41.3 S4 MX4SA4**	150	**C703_41.3 P112 BE112M4**	**C703_41.3 P112 BX112M4**	151
36	1016	1.0	40.5	10000	**C513_40.5 S4 ME4SA4**	**C513_40.5 S4 MX4SA4**	142	**C513_40.5 P112 BE112M4**	**C513_40.5 P112 BX112M4**	143
38	975	1.4	38.0	16000	**C612_38.0 S4 ME4SA4**	**C612_38.0 S4 MX4SA4**	146	**C612_38.0 P112 BE112M4**	**C612_38.0 P112 BX112M4**	147
39	928	1.1	37.0	10000	**C513_37.0 S4 ME4SA4**	**C513_37.0 S4 MX4SA4**	142	**C513_37.0 P112 BE112M4**	**C513_37.0 P112 BX112M4**	143
40	878	1.8	36.1	15700	**C613_36.1 S4 ME4SA4**	**C613_36.1 S4 MX4SA4**	146	**C613_36.1 P112 BE112M4**	**C613_36.1 P112 BX112M4**	147
41	891	2.4	34.7	23400	**C702_34.7 S4 ME4SA4**	**C702_34.7 S4 MX4SA4**	150	**C702_34.7 P112 BE112M4**	**C702_34.7 P112 BX112M4**	151
42	878	1.4	34.2	15700	**C612_34.2 S4 ME4SA4**	**C612_34.2 S4 MX4SA4**	146	**C612_34.2 P112 BE112M4**	**C612_34.2 P112 BX112M4**	147
44	847	0.9	33.0	10000	**C512_33.0 S4 ME4SA4**	**C512_33.0 S4 MX4SA4**	142	**C512_33.0 P112 BE112M4**	**C512_33.0 P112 BX112M4**	143
44	801	1.9	33.0	15500	**C613_33.0 S4 ME4SA4**	**C613_33.0 S4 MX4SA4**	146	**C613_33.0 P112 BE112M4**	**C613_33.0 P112 BX112M4**	147
47	781	1.7	30.4	15300	**C612_30.4 S4 ME4SA4**	**C612_30.4 S4 MX4SA4**	146	**C612_30.4 P112 BE112M4**	**C612_30.4 P112 BX112M4**	147
48	755	1.3	30.1	9880	**C513_30.1 S4 ME4SA4**	**C513_30.1 S4 MX4SA4**	142	**C513_30.1 P112 BE112M4**	**C513_30.1 P112 BX112M4**	143
48	764	1.0	29.8	10000	**C512_29.8 S4 ME4SA4**	**C512_29.8 S4 MX4SA4**	142	**C512_29.8 P112 BE112M4**	**C512_29.8 P112 BX112M4**	143
52	711	3.0	27.7	22300	**C702_27.7 S4 ME4SA4**	**C702_27.7 S4 MX4SA4**	150	**C702_27.7 P112 BE112M4**	**C702_27.7 P112 BX112M4**	151
52	689	1.4	27.4	9550	**C513_27.4 S4 ME4SA4**	**C513_27.4 S4 MX4SA4**	142	**C513_27.4 P112 BE112M4**	**C513_27.4 P112 BX112M4**	143
53	703	1.9	27.4	14900	**C612_27.4 S4 ME4SA4**	**C612_27.4 S4 MX4SA4**	146	**C612_27.4 P112 BE112M4**	**C612_27.4 P112 BX112M4**	147
54	651	2.2	26.8	14700	**C613_26.8 S4 ME4SA4**	**C613_26.8 S4 MX4SA4**	146	**C613_26.8 P112 BE112M4**	**C613_26.8 P112 BX112M4**	147
56	665	1.2	25.9	10000	**C512_25.9 S4 ME4SA4**	**C512_25.9 S4 MX4SA4**	142	**C512_25.9 P112 BE112M4**	**C512_25.9 P112 BX112M4**	143
58	637	2.1	24.8	14600	**C612_24.8 S4 ME4SA4**	**C612_24.8 S4 MX4SA4**	146	**C612_24.8 P112 BE112M4**	**C612_24.8 P112 BX112M4**	147
60	600	1.5	23.9	9250	**C513_23.9 S4 ME4SA4**	**C513_23.9 S4 MX4SA4**	142	**C513_23.9 P112 BE112M4**	**C513_23.9 P112 BX112M4**	143
62	599	1.3	23.4	10000	**C512_23.4 S4 ME4SA4**	**C512_23.4 S4 MX4SA4**	142	**C512_23.4 P112 BE112M4**	**C512_23.4 P112 BX112M4**	143
64	573	2.4	22.4	14200	**C612_22.4 S4 ME4SA4**	**C612_22.4 S4 MX4SA4**	146	**C612_22.4 P112 BE112M4**	**C612_22.4 P112 BX112M4**	147
69	538	1.5	21.0	9920	**C512_21.0 S4 ME4SA4**	**C512_21.0 S4 MX4SA4**	142	**C512_21.0 P112 BE112M4**	**C512_21.0 P112 BX112M4**	143
73	507	1.0	19.8	4760	**C412_19.8 S4 ME4SA4**	**C412_19.8 S4 MX4SA4**	138	**C412_19.8 P112 BE112M4**	**C412_19.8 P112 BX112M4**	139
73	503	2.7	19.6	13800	**C612_19.6 S4 ME4SA4**	**C612_19.6 S4 MX4SA4**	146	**C612_19.6 P112 BE112M4**	**C612_19.6 P112 BX112M4**	147
76	485	1.7	18.9	9730	**C512_18.9 S4 ME4SA4**	**C512_18.9 S4 MX4SA4**	142	**C512_18.9 P112 BE112M4**	**C512_18.9 P112 BX112M4**	143
81	456	1.1	17.8	4720	**C412_17.8 S4 ME4SA4**	**C412_17.8 S4 MX4SA4**	138	**C412_17.8 P112 BE112M4**	**C412_17.8 P112 BX112M4**	139
82	453	3.0	17.7	13400	**C612_17.7 S4 ME4SA4**	**C612_17.7 S4 MX4SA4**	146	**C612_17.7 P112 BE112M4**	**C612_17.7 P112 BX112M4**	147
87	426	1.9	16.6	9440	**C512_16.6 S4 ME4SA4**	**C512_16.6 S4 MX4SA4**	142	**C512_16.6 P112 BE112M4**	**C512_16.6 P112 BX112M4**	143
90	409	3.3	15.9	13100	**C612_15.9 S4 ME4SA4**	**C612_15.9 S4 MX4SA4**	146	**C612_15.9 P112 BE112M4**	**C612_15.9 P112 BX112M4**	147
91	406	1.1	15.8	4740	**C412_15.8 S4 ME4SA4**	**C412_15.8 S4 MX4SA4**	138	**C412_15.8 P112 BE112M4**	**C412_15.8 P112 BX112M4**	139
96	384	2.1	15.0	9230	**C512_15.0 S4 ME4SA4**	**C512_15.0 S4 MX4SA4**	142	**C512_15.0 P112 BE112M4**	**C512_15.0 P112 BX112M4**	143
98	378	1.0	14.8	3880	**C362_14.8 S4 ME4SA4**	**C362_14.8 S4 MX4SA4**	134	**C362_14.8 P112 BE112M4**	**C362_14.8 P112 BX112M4**	135
101	365	1.2	14.2	4690	**C412_14.2 S4 ME4SA4**	**C412_14.2 S4 MX4SA4**	138	**C412_14.2 P112 BE112M4**	**C412_14.2 P112 BX112M4**	139
108	342	1.1	13.3	3840	**C362_13.3 S4 ME4SA4**	**C362_13.3 S4 MX4SA4**	134	**C362_13.3 P112 BE112M4**	**C362_13.3 P112 BX112M4**	135
110	337	2.2	13.1	8930	**C512_13.1 S4 ME4SA4**	**C512_13.1 S4 MX4SA4**	142	**C512_13.1 P112 BE112M4**	**C512_13.1 P112 BX112M4**	143
116	318	1.3	12.4	4660	**C412_12.4 S4 ME4SA4**	**C412_12.4 S4 MX4SA4**	138	**C412_12.4 P112 BE112M4**	**C412_12.4 P112 BX112M4**	139
122	304	2.5	11.8	8720	**C512_11.8 S4 ME4SA4**	**C512_11.8 S4 MX4SA4**	142	**C512_11.8 P112 BE112M4**	**C512_11.8 P112 BX112M4**	143
123	299	1.3	11.7	3840	**C362_11.7 S4 ME4SA4**	**C362_11.7 S4 MX4SA4**	134	**C362_11.7 P112 BE112M4**	**C362_11.7 P112 BX112M4**	135
129	286	1.5	11.2	4580	**C412_11.2 S4 ME4SA4**	**C412_11.2 S4 MX4SA4**	138	**C412_11.2 P112 BE112M4**	**C412_11.2 P112 BX112M4**	139
136	272	1.4	10.6	3780	**C362_10.6 S4 ME4SA4**	**C362_10.6 S4 MX4SA4**	134	**C362_10.6 P112 BE112M4**	**C362_10.6 P112 BX112M4**	135

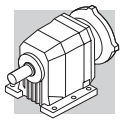

4 kW

n_2 min-1	M_2 Nm	S	i	R_{n2} N	IE2	IE3		IE2	IEC IE3	
148	250	2.7	9.8	8290	**C512_9.8 S4 ME4SA4**	**C512_9.8 S4 MX4SA4**	142	**C512_9.8 P112 BE112M4**	**C512_9.8 P112 BX112M4**	143
150	246	1.6	9.6	4510	**C412_9.6 S4 ME4SA4**	**C412_9.6 S4 MX4SA4**	138	**C412_9.6 P112 BE112M4**	**C412_9.6 P112 BX112M4**	139
155	238	0.9	9.3	3150	**C322_9.3 S4 ME4SA4**	**C322_9.3 S4 MX4SA4**	130	**C322_9.3 P112 BE112M4**	**C322_9.3 P112 BX112M4**	131
164	226	1.7	8.8	3720	**C362_8.8 S4 ME4SA4**	**C362_8.8 S4 MX4SA4**	134	**C362_8.8 P112 BE112M4**	**C362_8.8 P112 BX112M4**	135
164	225	3.0	8.8	8070	**C512_8.8 S4 ME4SA4**	**C512_8.8 S4 MX4SA4**	142	**C512_8.8 P112 BE112M4**	**C512_8.8 P112 BX112M4**	143
167	222	1.7	8.6	4420	**C412_8.6 S4 ME4SA4**	**C412_8.6 S4 MX4SA4**	138	**C412_8.6 P112 BE112M4**	**C412_8.6 P112 BX112M4**	139
170	218	1.0	8.5	3110	**C322_8.5 S4 ME4SA4**	**C322_8.5 S4 MX4SA4**	130	**C322_8.5 P112 BE112M4**	**C322_8.5 P112 BX112M4**	131
179	206	1.8	8.0	3650	**C362_8.0 S4 ME4SA4**	**C362_8.0 S4 MX4SA4**	134	**C362_8.0 P112 BE112M4**	**C362_8.0 P112 BX112M4**	135
186	199	3.2	7.8	7800	**C512_7.8 S4 ME4SA4**	**C512_7.8 S4 MX4SA4**	142	**C512_7.8 P112 BE112M4**	**C512_7.8 P112 BX112M4**	143
186	195	1.4	15.6	3090	**C322_15.6 S4 ME4SA2**		130	**C322_15.6 P112 BE112M2**		131
201	184	1.1	7.2	3070	**C322_7.2 S4 ME4SA4**	**C322_7.2 S4 MX4SA4**	130	**C322_7.2 P112 BE112M4**	**C322_7.2 P112 BX112M4**	131
204	181	2.0	7.1	4280	**C412_7.1 S4 ME4SA4**	**C412_7.1 S4 MX4SA4**	138	**C412_7.1 P112 BE112M4**	**C412_7.1 P112 BX112M4**	139
206	176	1.4	14.1	3040	**C322_14.1 S4 ME4SA2**		130	**C322_14.1 P112 BE112M2**		131
206	179	3.5	7.0	7580	**C512_7.0 S4 ME4SA4**	**C512_7.0 S4 MX4SA4**	142	**C512_7.0 P112 BE112M4**	**C512_7.0 P112 BX112M4**	143
212	174	2.0	6.8	3580	**C362_6.8 S4 ME4SA4**	**C362_6.8 S4 MX4SA4**	134	**C362_6.8 P112 BE112M4**	**C362_6.8 P112 BX112M4**	135
226	163	2.1	6.4	4180	**C412_6.4 S4 ME4SA4**	**C412_6.4 S4 MX4SA4**	138	**C412_6.4 P112 BE112M4**	**C412_6.4 P112 BX112M4**	139
230	161	1.0	6.3	2840	**C322_6.3 S4 ME4SA4**	**C322_6.3 S4 MX4SA4**	130	**C322_6.3 P112 BE112M4**	**C322_6.3 P112 BX112M4**	131
235	154	1.6	12.3	2990	**C322_12.3 S4 ME4SA2**		130	**C322_12.3 P112 BE112M2**		131
242	153	1.7	6.0	3840	**C412_6.0 S4 ME4SA4**	**C412_6.0 S4 MX4SA4**	138	**C412_6.0 P112 BE112M4**	**C412_6.0 P112 BX112M4**	139
246	150	1.3	5.8	3310	**C362_5.8 S4 ME4SA4**	**C362_5.8 S4 MX4SA4**	134	**C362_5.8 P112 BE112M4**	**C362_5.8 P112 BX112M4**	135
255	145	1.1	5.7	2780	**C322_5.7 S4 ME4SA4**	**C322_5.7 S4 MX4SA4**	130	**C322_5.7 P112 BE112M4**	**C322_5.7 P112 BX112M4**	131
259	140	1.6	11.2	2900	**C322_11.2 S4 ME4SA2**		130	**C322_11.2 P112 BE112M2**		131
273	135	1.5	5.3	3200	**C362_5.3 S4 ME4SA4**	**C362_5.3 S4 MX4SA4**	134	**C362_5.3 P112 BE112M4**	**C362_5.3 P112 BX112M4**	135
291	127	1.2	5.0	2760	**C322_5.0 S4 ME4SA4**	**C322_5.0 S4 MX4SA4**	130	**C322_5.0 P112 BE112M4**	**C322_5.0 P112 BX112M4**	131
301	121	1.2	9.6	1680				**C222_9.6 P112 BE112M2**		127
309	120	2.2	4.7	3500	**C412_4.7 S4 ME4SA4**	**C412_4.7 S4 MX4SA4**	138	**C412_4.7 P112 BE112M4**	**C412_4.7 P112 BX112M4**	139
312	119	1.7	4.6	3180	**C362_4.6 S4 ME4SA4**	**C362_4.6 S4 MX4SA4**	134	**C362_4.6 P112 BE112M4**	**C362_4.6 P112 BX112M4**	135
312	116	1.9	9.3	2840	**C322_9.3 S4 ME4SA2**		130	**C322_9.3 P112 BE112M2**		131
320	115	1.3	4.5	2690	**C322_4.5 S4 ME4SA4**	**C322_4.5 S4 MX4SA4**	130	**C322_4.5 P112 BE112M4**	**C322_4.5 P112 BX112M4**	131
335	108	1.3	8.7	1660				**C222_8.7 P112 BE112M2**		127
338	109	0.9	4.3	1300				**C222_4.3 P112 BE112M4**	**C222_4.3 P112 BX112M4**	127
342	106	2.0	8.5	2750	**C322_8.5 S4 ME4SA2**		130	**C322_8.5 P112 BE112M2**		131
343	108	1.9	4.2	3060	**C362_4.2 S4 ME4SA4**	**C362_4.2 S4 MX4SA4**	134	**C362_4.2 P112 BE112M4**	**C362_4.2 P112 BX112M4**	135
386	96	1.6	3.7	2640	**C322_3.7 S4 ME4SA4**	**C322_3.7 S4 MX4SA4**	130	**C322_3.7 P112 BE112M4**	**C322_3.7 P112 BX112M4**	131
388	95	0.9	3.7	1560				**C222_3.7 P112 BE112M4**	**C222_3.7 P112 BX112M4**	127
399	93	2.8	3.6	3180	**C412_3.6 S4 ME4SA4**	**C412_3.6 S4 MX4SA4**	138	**C412_3.6 P112 BE112M4**	**C412_3.6 P112 BX112M4**	139
405	90	2.2	7.2	2690	**C322_7.2 S4 ME4SA2**		130	**C322_7.2 P112 BE112M2**		131
409	89	1.5	7.1	1650				**C222_7.1 P112 BE112M2**		127
413	89	2.2	3.5	3010	**C362_3.5 S4 ME4SA4**	**C362_3.5 S4 MX4SA4**	134	**C362_3.5 P112 BE112M4**	**C362_3.5 P112 BX112M4**	135
422	87	1.6	3.4	2580	**C322_3.4 S4 ME4SA4**	**C322_3.4 S4 MX4SA4**	130	**C322_3.4 P112 BE112M4**	**C322_3.4 P112 BX112M4**	131
433	85	1.0	3.3	1540				**C222_3.3 P112 BE112M4**	**C222_3.3 P112 BX112M4**	127
453	82	2.5	3.2	2890	**C362_3.2 S4 ME4SA4**	**C362_3.2 S4 MX4SA4**	134	**C362_3.2 P112 BE112M4**	**C362_3.2 P112 BX112M4**	135
463	78	2.0	6.3	2530	**C322_6.3 S4 ME4SA2**		130	**C322_6.3 P112 BE112M2**		131
476	76	1.4	6.1	1540				**C222_6.1 P112 BE112M2**		127
500	74	1.8	2.9	2500	**C322_2.9 S4 ME4SA4**	**C322_2.9 S4 MX4SA4**	130	**C322_2.9 P112 BE112M4**	**C322_2.9 P112 BX112M4**	131
519	70	1.5	5.6	1520				**C222_5.6 P112 BE112M2**		127
529	70	1.1	2.7	1530				**C222_2.7 P112 BE112M4**	**C222_2.7 P112 BX112M4**	127
536	69	2.9	2.7	2840	**C362_2.7 S4 ME4SA4**	**C362_2.7 S4 MX4SA4**	134	**C362_2.7 P112 BE112M4**	**C362_2.7 P112 BX112M4**	135
586	62	2.4	5.0	2410	**C322_5.0 S4 ME4SA2**		130	**C322_5.0 P112 BE112M2**		131
608	60	1.7	4.8	1500				**C222_4.8 P112 BE112M2**		127
644	56	2.7	4.5	2330	**C322_4.5 S4 ME4SA2**		130	**C322_4.5 P112 BE112M2**		131
681	53	1.8	4.3	1470				**C222_4.3 P112 BE112M2**		127
776	47	3.2	3.7	2250	**C322_3.7 S4 ME4SA2**		130	**C322_3.7 P112 BE112M2**		131
782	46	1.9	3.7	1450				**C222_3.7 P112 BE112M2**		127
851	43	3.2	3.4	2170	**C322_3.4 S4 ME4SA2**		130	**C322_3.4 P112 BE112M2**		131
872	42	2.0	3.3	1410				**C222_3.3 P112 BE112M2**		127
1007	36	3.6	2.9	2100	**C322_2.9 S4 ME4SA2**		130	**C322_2.9 P112 BE112M2**		131
1065	34	2.3	2.7	1370				**C222_2.7 P112 BE112M2**		127

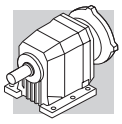

5.5 kW

n_2 min-1	M_2 Nm	S	i	R_{n2} N	IE2	IE3		IEC IE2	IEC IE3	
3.6	13276	0.9	409.8	85000	**C1004_409.8 S4 ME4SB4**	**C1004_409.8 S4 MX4SB4**	159	**C1004_409.8 P132 BE132S4**	**C1004_409.8 P132 BX132SB4**	160
3.8	12328	1.0	380.5	85000	**C1004_380.5 S4 ME4SB4**	**C1004_380.5 S4 MX4SB4**	159	**C1004_380.5 P132 BE132S4**	**C1004_380.5 P132 BX132SB4**	160
4.5	10485	1.1	323.6	85000	**C1004_323.6 S4 ME4SB4**	**C1004_323.6 S4 MX4SB4**	159	**C1004_323.6 P132 BE132S4**	**C1004_323.6 P132 BX132SB4**	160
4.9	9736	1.2	300.5	85000	**C1004_300.5 S4 ME4SB4**	**C1004_300.5 S4 MX4SB4**	159	**C1004_300.5 P132 BE132S4**	**C1004_300.5 P132 BX132SB4**	160
5.6	8521	1.4	263.0	85000	**C1004_263.0 S4 ME4SB4**	**C1004_263.0 S4 MX4SB4**	159	**C1004_263.0 P132 BE132S4**	**C1004_263.0 P132 BX132SB4**	160
6.0	7913	1.5	244.2	85000	**C1004_244.2 S4 ME4SB4**	**C1004_244.2 S4 MX4SB4**	159	**C1004_244.2 P132 BE132S4**	**C1004_244.2 P132 BX132SB4**	160
6.3	7507	1.0	231.7	60000	**C904_231.7 S4 ME4SB4**	**C904_231.7 S4 MX4SB4**	156	**C904_231.7 P132 BE132S4**	**C904_231.7 P132 BX132SB4**	157
6.9	6881	1.0	212.4	60000	**C904_212.4 S4 ME4SB4**	**C904_212.4 S4 MX4SB4**	156	**C904_212.4 P132 BE132S4**	**C904_212.4 P132 BX132SB4**	157
7.3	6468	1.9	199.6	85000	**C1004_199.6 S4 ME4SB4**	**C1004_199.6 S4 MX4SB4**	159	**C1004_199.6 P132 BE132S4**	**C1004_199.6 P132 BX132SB4**	160
7.9	6006	2.0	185.4	85000	**C1004_185.4 S4 ME4SB4**	**C1004_185.4 S4 MX4SB4**	159	**C1004_185.4 P132 BE132S4**	**C1004_185.4 P132 BX132SB4**	160
8.5	5762	1.2	172.1	60000	**C903_172.1 S4 ME4SB4**	**C903_172.1 S4 MX4SB4**	156	**C903_172.1 P132 BE132S4**	**C903_172.1 P132 BX132SB4**	157
9.0	5252	2.3	162.1	85000	**C1004_162.1 S4 ME4SB4**	**C1004_162.1 S4 MX4SB4**	159	**C1004_162.1 P132 BE132S4**	**C1004_162.1 P132 BX132SB4**	160
9.3	5282	1.3	157.8	60000	**C903_157.8 S4 ME4SB4**	**C903_157.8 S4 MX4SB4**	156	**C903_157.8 P132 BE132S4**	**C903_157.8 P132 BX132SB4**	157
9.7	5036	2.4	150.4	85000	**C1003_150.4 S4 ME4SB4**	**C1003_150.4 S4 MX4SB4**	159	**C1003_150.4 P132 BE132S4**	**C1003_150.4 P132 BX132SB4**	160
10.0	4899	1.5	146.3	60000	**C903_146.3 S4 ME4SB4**	**C903_146.3 S4 MX4SB4**	156	**C903_146.3 P132 BE132S4**	**C903_146.3 P132 BX132SB4**	157
10.5	4677	2.4	139.7	85000	**C1003_139.7 S4 ME4SB4**	**C1003_139.7 S4 MX4SB4**	159	**C1003_139.7 P132 BE132S4**	**C1003_139.7 P132 BX132SB4**	160
10.9	4491	1.6	134.1	60000	**C903_134.1 S4 ME4SB4**	**C903_134.1 S4 MX4SB4**	156	**C903_134.1 P132 BE132S4**	**C903_134.1 P132 BX132SB4**	157
12.1	4035	3.0	120.5	85000	**C1003_120.5 S4 ME4SB4**	**C1003_120.5 S4 MX4SB4**	159	**C1003_120.5 P132 BE132S4**	**C1003_120.5 P132 BX132SB4**	160
12.2	3999	1.0	119.5	35000	**C803_119.5 S4 ME4SB4**	**C803_119.5 S4 MX4SB4**	153	**C803_119.5 P132 BE132S4**	**C803_119.5 P132 BX132SB4**	154
12.5	3908	1.8	116.7	60000	**C903_116.7 S4 ME4SB4**	**C903_116.7 S4 MX4SB4**	156	**C903_116.7 P132 BE132S4**	**C903_116.7 P132 BX132SB4**	157
13.3	3666	1.1	109.5	35000	**C803_109.5 S4 ME4SB4**	**C803_109.5 S4 MX4SB4**	153	**C803_109.5 P132 BE132S4**	**C803_109.5 P132 BX132SB4**	154
13.6	3582	2.0	107.0	60000	**C903_107.0 S4 ME4SB4**	**C903_107.0 S4 MX4SB4**	156	**C903_107.0 P132 BE132S4**	**C903_107.0 P132 BX132SB4**	157
15.0	3260	1.2	97.4	35000	**C803_97.4 S4 ME4SB4**	**C803_97.4 S4 MX4SB4**	153	**C803_97.4 P132 BE132S4**	**C803_97.4 P132 BX132SB4**	154
15.2	3222	2.2	96.2	60000	**C903_96.2 S4 ME4SB4**	**C903_96.2 S4 MX4SB4**	156	**C903_96.2 P132 BE132S4**	**C903_96.2 P132 BX132SB4**	157
16.4	2989	1.3	89.3	35000	**C803_89.3 S4 ME4SB4**	**C803_89.3 S4 MX4SB4**	153	**C803_89.3 P132 BE132S4**	**C803_89.3 P132 BX132SB4**	154
16.5	2954	2.4	88.2	60000	**C903_88.2 S4 ME4SB4**	**C903_88.2 S4 MX4SB4**	156	**C903_88.2 P132 BE132S4**	**C903_88.2 P132 BX132SB4**	157
18.0	2719	2.6	81.2	59100	**C903_81.2 S4 ME4SB4**	**C903_81.2 S4 MX4SB4**	156	**C903_81.2 P132 BE132S4**	**C903_81.2 P132 BX132SB4**	157
19.0	2575	1.6	76.9	35000	**C803_76.9 S4 ME4SB4**	**C803_76.9 S4 MX4SB4**	153	**C803_76.9 P132 BE132S4**	**C803_76.9 P132 BX132SB4**	154
19.6	2492	2.8	74.4	58200	**C903_74.4 S4 ME4SB4**	**C903_74.4 S4 MX4SB4**	156	**C903_74.4 P132 BE132S4**	**C903_74.4 P132 BX132SB4**	157
20.5	2388	1.0	71.3	25000	**C703_71.3 S4 ME4SB4**	**C703_71.3 S4 MX4SB4**	150	**C703_71.3 P132 BE132S4**	**C703_71.3 P132 BX132SB4**	151
20.7	2360	1.7	70.5	35000	**C803_70.5 S4 ME4SB4**	**C803_70.5 S4 MX4SB4**	153	**C803_70.5 P132 BE132S4**	**C803_70.5 P132 BX132SB4**	154
22.2	2205	1.0	65.9	25000	**C703_65.9 S4 ME4SB4**	**C703_65.9 S4 MX4SB4**	150	**C703_65.9 P132 BE132S4**	**C703_65.9 P132 BX132SB4**	151
23.4	2093	1.9	62.5	35000	**C803_62.5 S4 ME4SB4**	**C803_62.5 S4 MX4SB4**	153	**C803_62.5 P132 BE132S4**	**C803_62.5 P132 BX132SB4**	154
25.5	1918	2.1	57.3	35000	**C803_57.3 S4 ME4SB4**	**C803_57.3 S4 MX4SB4**	153	**C803_57.3 P132 BE132S4**	**C803_57.3 P132 BX132SB4**	154
25.8	1892	1.2	56.5	25000	**C703_56.5 S4 ME4SB4**	**C703_56.5 S4 MX4SB4**	150	**C703_56.5 P132 BE132S4**	**C703_56.5 P132 BX132SB4**	151
27.3	1732	0.9	53.5	15000	**C613_53.5 S4 ME4SB4**	**C613_53.5 S4 MX4SB4**	146	**C613_53.5 P132 BE132S4**	**C613_53.5 P132 BX132SB4**	147
28.0	1746	1.3	52.2	24700	**C703_52.2 S4 ME4SB4**	**C703_52.2 S4 MX4SB4**	150	**C703_52.2 P132 BE132S4**	**C703_52.2 P132 BX132SB4**	151
31	1543	1.0	47.6	15300	**C613_47.6 S4 ME4SB4**	**C613_47.6 S4 MX4SB4**	146	**C613_47.6 P132 BE132S4**	**C613_47.6 P132 BX132SB4**	147
31	1588	2.4	47.4	35000	**C803_47.4 S4 ME4SB4**	**C803_47.4 S4 MX4SB4**	153	**C803_47.4 P132 BE132S4**	**C803_47.4 P132 BX132SB4**	154
33	1497	1.5	44.7	24100	**C703_44.7 S4 ME4SB4**	**C703_44.7 S4 MX4SB4**	150	**C703_44.7 P132 BE132S4**	**C703_44.7 P132 BX132SB4**	151
34	1456	2.6	43.5	35000	**C803_43.5 S4 ME4SB4**	**C803_43.5 S4 MX4SB4**	153	**C803_43.5 P132 BE132S4**	**C803_43.5 P132 BX132SB4**	154
34	1408	1.1	43.4	15000	**C613_43.4 S4 ME4SB4**	**C613_43.4 S4 MX4SB4**	146	**C613_43.4 P132 BE132S4**	**C613_43.4 P132 BX132SB4**	147
35	1381	1.7	41.3	23800	**C703_41.3 S4 ME4SB4**	**C703_41.3 S4 MX4SB4**	150	**C703_41.3 P132 BE132S4**	**C703_41.3 P132 BX132SB4**	151
37	1338	2.4	39.1	35000	**C802_39.1 S4 ME4SB4**	**C802_39.1 S4 MX4SB4**	153	**C802_39.1 P132 BE132S4**	**C802_39.1 P132 BX132SB4**	154
38	1300	1.0	38.0	14800	**C612_38.0 S4 ME4SB4**	**C612_38.0 S4 MX4SB4**	146	**C612_38.0 P132 BE132S4**	**C612_38.0 P132 BX132SB4**	147
40	1171	1.3	36.1	14800	**C613_36.1 S4 ME4SB4**	**C613_36.1 S4 MX4SB4**	146	**C613_36.1 P132 BE132S4**	**C613_36.1 P132 BX132SB4**	147
42	1188	1.8	34.7	22100	**C702_34.7 S4 ME4SB4**	**C702_34.7 S4 MX4SB4**	150	**C702_34.7 P132 BE132S4**	**C702_34.7 P132 BX132SB4**	151
43	1170	1.0	34.2	14500	**C612_34.2 S4 ME4SB4**	**C612_34.2 S4 MX4SB4**	146	**C612_34.2 P132 BE132S4**	**C612_34.2 P132 BX132SB4**	147
44	1068	1.4	33.0	14500	**C613_33.0 S4 ME4SB4**	**C613_33.0 S4 MX4SB4**	146	**C613_33.0 P132 BE132S4**	**C613_33.0 P132 BX132SB4**	147
47	1072	3.5	31.3	33400	**C802_31.3 S4 ME4SB4**	**C802_31.3 S4 MX4SB4**	153	**C802_31.3 P132 BE132S4**	**C802_31.3 P132 BX132SB4**	154
48	1041	1.3	30.4	14300	**C612_30.4 S4 ME4SB4**	**C612_30.4 S4 MX4SB4**	146	**C612_30.4 P132 BE132S4**	**C612_30.4 P132 BX132SB4**	147
49	1006	1.0	30.1	9610	**C513_30.1 S4 ME4SB4**	**C513_30.1 S4 MX4SB4**	142	**C513_30.1 P132 BE132S4**	**C513_30.1 P132 BX132SB4**	143
53	948	2.2	27.7	21200	**C702_27.7 S4 ME4SB4**	**C702_27.7 S4 MX4SB4**	150	**C702_27.7 P132 BE132S4**	**C702_27.7 P132 BX132SB4**	151
53	919	1.1	27.4	9490	**C513_27.4 S4 ME4SB4**	**C513_27.4 S4 MX4SB4**	142	**C513_27.4 P132 BE132S4**	**C513_27.4 P132 BX132SB4**	143
53	938	1.4	27.4	13900	**C612_27.4 S4 ME4SB4**	**C612_27.4 S4 MX4SB4**	146	**C612_27.4 P132 BE132S4**	**C612_27.4 P132 BX132SB4**	147
56	886	0.9	25.9	9350	**C512_25.9 S4 ME4SB4**	**C512_25.9 S4 MX4SB4**	142	**C512_25.9 P132 BE132S4**	**C512_25.9 P132 BX132SB4**	143
59	849	1.6	24.8	13700	**C612_24.8 S4 ME4SB4**	**C612_24.8 S4 MX4SB4**	146	**C612_24.8 P132 BE132S4**	**C612_24.8 P132 BX132SB4**	147

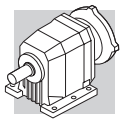

5.5 kW

n_2	M_2	S	i	R_{n2}	IE2	IE3		IEC IE2	IEC IE3	
min-1	Nm			N						
61	800	1.2	23.9	9540	**C513_23.9 S4 ME4SB4**	**C513_23.9 S4 MX4SB4**	142	**C513_23.9 P132 BE132S4**	**C513_23.9 P132 BX132SB4**	143
63	799	1.0	23.4	9310	**C512_23.4 S4 ME4SB4**	**C512_23.4 S4 MX4SB4**	142	**C512_23.4 P132 BE132S4**	**C512_23.4 P132 BX132SB4**	143
64	782	2.7	22.9	20400	**C702_22.9 S4 ME4SB4**	**C702_22.9 S4 MX4SB4**	150	**C702_22.9 P132 BE132S4**	**C702_22.9 P132 BX132SB4**	151
65	764	1.8	22.4	13400	**C612_22.4 S4 ME4SB4**	**C612_22.4 S4 MX4SB4**	146	**C612_22.4 P132 BE132S4**	**C612_22.4 P132 BX132SB4**	147
70	717	1.1	21.0	9150	**C512_21.0 S4 ME4SB4**	**C512_21.0 S4 MX4SB4**	142	**C512_21.0 P132 BE132S4**	**C512_21.0 P132 BX132SB4**	143
74	670	2.0	19.6	13100	**C612_19.6 S4 ME4SB4**	**C612_19.6 S4 MX4SB4**	146	**C612_19.6 P132 BE132S4**	**C612_19.6 P132 BX132SB4**	147
76	660	3.2	19.3	19700	**C702_19.3 S4 ME4SB4**	**C702_19.3 S4 MX4SB4**	150	**C702_19.3 P132 BE132S4**	**C702_19.3 P132 BX132SB4**	151
77	646	1.2	18.9	9030	**C512_18.9 S4 ME4SB4**	**C512_18.9 S4 MX4SB4**	142	**C512_18.9 P132 BE132S4**	**C512_18.9 P132 BX132SB4**	143
83	604	2.2	17.7	12700	**C612_17.7 S4 ME4SB4**	**C612_17.7 S4 MX4SB4**	146	**C612_17.7 P132 BE132S4**	**C612_17.7 P132 BX132SB4**	147
88	568	1.4	16.6	8810	**C512_16.6 S4 ME4SB4**	**C512_16.6 S4 MX4SB4**	142	**C512_16.6 P132 BE132S4**	**C512_16.6 P132 BX132SB4**	143
92	545	2.5	15.9	12500	**C612_15.9 S4 ME4SB4**	**C612_15.9 S4 MX4SB4**	146	**C612_15.9 P132 BE132S4**	**C612_15.9 P132 BX132SB4**	147
98	512	1.6	15.0	8660	**C512_15.0 S4 ME4SB4**	**C512_15.0 S4 MX4SB4**	142	**C512_15.0 P132 BE132S4**	**C512_15.0 P132 BX132SB4**	143
102	491	2.8	14.3	12100	**C612_14.3 S4 ME4SB4**	**C612_14.3 S4 MX4SB4**	146	**C612_14.3 P132 BE132S4**	**C612_14.3 P132 BX132SB4**	147
102	487	0.9	14.2	4000	**C412_14.2 S4 ME4SB4**	**C412_14.2 S4 MX4SB4**	138	**C412_14.2 P132 BE132S4**	**C412_14.2 P132 BX132SB4**	139
111	449	1.7	13.1	8420	**C512_13.1 S4 ME4SB4**	**C512_13.1 S4 MX4SB4**	142	**C512_13.1 P132 BE132S4**	**C512_13.1 P132 BX132SB4**	143
118	424	1.0	12.4	4060	**C412_12.4 S4 ME4SB4**	**C412_12.4 S4 MX4SB4**	138	**C412_12.4 P132 BE132S4**	**C412_12.4 P132 BX132SB4**	139
121	414	3.3	12.1	11600	**C612_12.1 S4 ME4SB4**	**C612_12.1 S4 MX4SB4**	146	**C612_12.1 P132 BE132S4**	**C612_12.1 P132 BX132SB4**	147
123	405	1.9	11.8	8250	**C512_11.8 S4 ME4SB4**	**C512_11.8 S4 MX4SB4**	142	**C512_11.8 P132 BE132S4**	**C512_11.8 P132 BX132SB4**	143
125	399	1.0	11.7	3380	**C362_11.7 S4 ME4SB4**	**C362_11.7 S4 MX4SB4**	134	**C362_11.7 P132 BE132S4**	**C362_11.7 P132 BX132SB4**	135
131	382	1.1	11.2	4030	**C412_11.2 S4 ME4SB4**	**C412_11.2 S4 MX4SB4**	138	**C412_11.2 P132 BE132S4**	**C412_11.2 P132 BX132SB4**	139
138	363	1.0	10.6	3350	**C362_10.6 S4 ME4SB4**	**C362_10.6 S4 MX4SB4**	134	**C362_10.6 P132 BE132S4**	**C362_10.6 P132 BX132SB4**	135
150	334	2.1	9.8	7890	**C512_9.8 S4 ME4SB4**	**C512_9.8 S4 MX4SB4**	142	**C512_9.8 P132 BE132S4**	**C512_9.8 P132 BX132SB4**	143
152	328	1.2	9.6	4030	**C412_9.6 S4 ME4SB4**	**C412_9.6 S4 MX4SB4**	138	**C412_9.6 P132 BE132S4**	**C412_9.6 P132 BX132SB4**	139
166	301	1.3	8.8	3350	**C362_8.8 S4 ME4SB4**	**C362_8.8 S4 MX4SB4**	134	**C362_8.8 P132 BE132S4**	**C362_8.8 P132 BX132SB4**	135
166	301	2.3	8.8	7700	**C512_8.8 S4 ME4SB4**	**C512_8.8 S4 MX4SB4**	142	**C512_8.8 P132 BE132S4**	**C512_8.8 P132 BX132SB4**	143
182	275	1.3	8.0	3330	**C362_8.0 S4 ME4SB4**	**C362_8.0 S4 MX4SB4**	134	**C362_8.0 P132 BE132S4**	**C362_8.0 P132 BX132SB4**	135
188	265	2.4	7.8	7460	**C512_7.8 S4 ME4SB4**	**C512_7.8 S4 MX4SB4**	142	**C512_7.8 P132 BE132S4**	**C512_7.8 P132 BX132SB4**	143
207	242	1.5	7.1	3920	**C412_7.1 S4 ME4SB4**	**C412_7.1 S4 MX4SB4**	138	**C412_7.1 P132 BE132S4**	**C412_7.1 P132 BX132SB4**	139
209	239	2.6	7.0	7280	**C512_7.0 S4 ME4SB4**	**C512_7.0 S4 MX4SB4**	142	**C512_7.0 P132 BE132S4**	**C512_7.0 P132 BX132SB4**	143
215	232	1.5	6.8	3280	**C362_6.8 S4 ME4SB4**	**C362_6.8 S4 MX4SB4**	134	**C362_6.8 P132 BE132S4**	**C362_6.8 P132 BX132SB4**	135
229	218	1.6	6.4	3840	**C412_6.4 S4 ME4SB4**	**C412_6.4 S4 MX4SB4**	138	**C412_6.4 P132 BE132S4**	**C412_6.4 P132 BX132SB4**	139
243	205	3.2	6.0	9480	**C612_6.0 S4 ME4SB4**	**C612_6.0 S4 MX4SB4**	146	**C612_6.0 P132 BE132S4**	**C612_6.0 P132 BX132SB4**	147
245	204	1.3	6.0	3430	**C412_6.0 S4 ME4SB4**	**C412_6.0 S4 MX4SB4**	138	**C412_6.0 P132 BE132S4**	**C412_6.0 P132 BX132SB4**	139
250	200	1.0	5.8	3020	**C362_5.8 S4 ME4SB4**	**C362_5.8 S4 MX4SB4**	134	**C362_5.8 P132 BE132S4**	**C362_5.8 P132 BX132SB4**	135
259	193	2.3	5.6	6720	**C512_5.6 S4 ME4SB4**	**C512_5.6 S4 MX4SB4**	142	**C512_5.6 P132 BE132S4**	**C512_5.6 P132 BX132SB4**	143
262	190	2.2	11.2	3770	**C412_11.2 S4 ME4SB2**		138	**C412_11.2 P132 BE132SA2**		139
277	181	1.1	5.3	2930	**C362_5.3 S4 ME4SB4**	**C362_5.3 S4 MX4SB4**	134	**C362_5.3 P132 BE132S4**	**C362_5.3 P132 BX132SB4**	135
292	171	2.5	3.3	6530	**C512_3.3 S5 ME5SA6**		142	**C512_3.3 P160 BE160MA6**		143
295	169	0.9	5.0	2480	**C322_5.0 S4 ME4SB4**	**C322_5.0 S4 MX4SB4**	130	**C322_5.0 P132 BE132S4**	**C322_5.0 P132 BX132SB4**	131
305	164	2.4	9.6	3680	**C412_9.6 S4 ME4SB2**		138	**C412_9.6 P132 BE132SA2**		139
313	159	1.6	4.7	3360	**C412_4.7 S4 ME4SB4**	**C412_4.7 S4 MX4SB4**	138	**C412_4.7 P132 BE132S4**	**C412_4.7 P132 BX132SB4**	139
316	158	1.3	4.6	2860	**C362_4.6 S4 ME4SB4**	**C362_4.6 S4 MX4SB4**	134	**C362_4.6 P132 BE132S4**	**C362_4.6 P132 BX132SB4**	135
324	154	1.0	4.5	2500	**C322_4.5 S4 ME4SB4**	**C322_4.5 S4 MX4SB4**	130	**C322_4.5 P132 BE132S4**	**C322_4.5 P132 BX132SB4**	131
328	152	2.9	4.5	6330	**C512_4.5 S4 ME4SB4**	**C512_4.5 S4 MX4SB4**	142	**C512_4.5 P132 BE132S4**	**C512_4.5 P132 BX132SB4**	143
338	147	2.6	8.6	3600	**C412_8.6 S4 ME4SB2**		138	**C412_8.6 P132 BE132SA2**		139
348	144	1.4	4.2	2830	**C362_4.2 S4 ME4SB4**	**C362_4.2 S4 MX4SB4**	134	**C362_4.2 P132 BE132S4**	**C362_4.2 P132 BX132SB4**	135
364	137	2.7	8.0	2850	**C362_8.0 S4 ME4SB2**		134	**C362_8.0 P132 BE132SA2**		135
367	136	2.9	2.6	6150	**C512_2.6 S5 ME5SA6**		142	**C512_2.6 P160 BE160MA6**		143
391	128	1.2	3.7	2410	**C322_3.7 S4 ME4SB4**	**C322_3.7 S4 MX4SB4**	130	**C322_3.7 P132 BE132S4**	**C322_3.7 P132 BX132SB4**	131
404	123	2.1	3.6	3240	**C412_3.6 S4 ME4SB4**	**C412_3.6 S4 MX4SB4**	138	**C412_3.6 P132 BE132S4**	**C412_3.6 P132 BX132SB4**	139
414	121	2.9	7.1	3460	**C412_7.1 S4 ME4SB2**		138	**C412_7.1 P132 BE132SA2**		139
419	119	1.7	3.5	2750	**C362_3.5 S4 ME4SB4**	**C362_3.5 S4 MX4SB4**	134	**C362_3.5 P132 BE132S4**	**C362_3.5 P132 BX132SB4**	135
428	117	1.2	3.4	2370	**C322_3.4 S4 ME4SB4**	**C322_3.4 S4 MX4SB4**	130	**C322_3.4 P132 BE132S4**	**C322_3.4 P132 BX132SB4**	131
431	116	3.1	6.8	2750	**C362_6.8 S4 ME4SB2**		134	**C362_6.8 P132 BE132SA2**		135
459	109	1.8	3.2	2700	**C362_3.2 S4 ME4SB4**	**C362_3.2 S4 MX4SB4**	134	**C362_3.2 P132 BE132S4**	**C362_3.2 P132 BX132SB4**	135
460	109	3.2	6.4	3370	**C412_6.4 S4 ME4SB2**		138	**C412_6.4 P132 BE132SA2**		139
491	102	2.6	6.0	3140	**C412_6.0 S4 ME4SB2**		138	**C412_6.0 P132 BE132SA2**		139

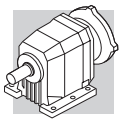

5.5 kW

n_2 min-1	M_2 Nm	S	i	R_{n2} N	IE2	IE3		IEC IE2	IEC IE3	
500	100	2.0	5.8	2620	**C362_5.8 S4 ME4SB2**		134	**C362_5.8 P132 BE132SA2**		135
507	98	1.3	2.9	2310	**C322_2.9 S4 ME4SB4**	**C322_2.9 S4 MX4SB4**	130	**C322_2.9 P132 BE132S4**	**C322_2.9 P132 BX132SB4**	131
543	92	2.2	2.7	2620	**C362_2.7 S4 ME4SB4**	**C362_2.7 S4 MX4SB4**	134	**C362_2.7 P132 BE132S4**	**C362_2.7 P132 BX132SB4**	135
549	91	2.7	2.7	3070	**C412_2.7 S4 ME4SB4**	**C412_2.7 S4 MX4SB4**	138	**C412_2.7 P132 BE132S4**	**C412_2.7 P132 BX132SB4**	139
554	90	2.2	5.3	2550	**C362_5.3 S4 ME4SB2**		134	**C362_5.3 P132 BE132SA2**		135
591	84	1.8	5.0	2230	**C322_5.0 S4 ME4SB2**		130	**C322_5.0 P132 BE132SA2**		131
627	80	3.3	4.7	2990	**C412_4.7 S4 ME4SB2**		138	**C412_4.7 P132 BE132SA2**		139
650	77	2.0	4.5	2190	**C322_4.5 S4 ME4SB2**		130	**C322_4.5 P132 BE132SA2**		131
783	64	2.4	3.7	2120	**C322_3.7 S4 ME4SB2**		130	**C322_3.7 P132 BE132SA2**		131
858	58	2.4	3.4	2080	**C322_3.4 S4 ME4SB2**		130	**C322_3.4 P132 BE132SA2**		131
1016	49	2.6	2.9	2000	**C322_2.9 S4 ME4SB2**		130	**C322_2.9 P132 BE132SA2**		131

7.5 kW

n_2 min-1	M_2 Nm	S	i	R_{n2} N	IE2	IE3		IEC IE2	IEC IE3	
4.8	13252	0.9	300.5	85000	**C1004_300.5 S4 ME4LA4**	**C1004_300.5 S4 MX4LA4**	159	**C1004_300.5 P132 BE132MA4**	**C1004_300.5 P132 BX132MA4**	160
5.5	11598	1.0	263.0	85000	**C1004_263.0 S4 ME4LA4**	**C1004_263.0 S4 MX4LA4**	159	**C1004_263.0 P132 BE132MA4**	**C1004_263.0 P132 BX132MA4**	160
6.0	10770	1.1	244.2	85000	**C1004_244.2 S4 ME4LA4**	**C1004_244.2 S4 MX4LA4**	159	**C1004_244.2 P132 BE132MA4**	**C1004_244.2 P132 BX132MA4**	160
7.3	8804	1.4	199.6	85000	**C1004_199.6 S4 ME4LA4**	**C1004_199.6 S4 MX4LA4**	159	**C1004_199.6 P132 BE132MA4**	**C1004_199.6 P132 BX132MA4**	160
7.8	8175	1.5	185.4	85000	**C1004_185.4 S4 ME4LA4**	**C1004_185.4 S4 MX4LA4**	159	**C1004_185.4 P132 BE132MA4**	**C1004_185.4 P132 BX132MA4**	160
8.5	7843	0.9	172.1	60000	**C903_172.1 S4 ME4LA4**	**C903_172.1 S4 MX4LA4**	156	**C903_172.1 P132 BE132MA4**	**C903_172.1 P132 BX132MA4**	157
9.0	7149	1.7	162.1	85000	**C1004_162.1 S4 ME4LA4**	**C1004_162.1 S4 MX4LA4**	159	**C1004_162.1 P132 BE132MA4**	**C1004_162.1 P132 BX132MA4**	160
9.2	7189	1.0	157.8	60000	**C903_157.8 S4 ME4LA4**	**C903_157.8 S4 MX4LA4**	156	**C903_157.8 P132 BE132MA4**	**C903_157.8 P132 BX132MA4**	157
9.7	6855	1.8	150.4	85000	**C1003_150.4 S4 ME4LA4**	**C1003_150.4 S4 MX4LA4**	159	**C1003_150.4 P132 BE132MA4**	**C1003_150.4 P132 BX132MA4**	160
9.9	6668	1.1	146.3	59600	**C903_146.3 S4 ME4LA4**	**C903_146.3 S4 MX4LA4**	156	**C903_146.3 P132 BE132MA4**	**C903_146.3 P132 BX132MA4**	157
10.4	6365	1.7	139.7	85000	**C1003_139.7 S4 ME4LA4**	**C1003_139.7 S4 MX4LA4**	159	**C1003_139.7 P132 BE132MA4**	**C1003_139.7 P132 BX132MA4**	160
10.8	6113	1.2	134.1	59400	**C903_134.1 S4 ME4LA4**	**C903_134.1 S4 MX4LA4**	156	**C903_134.1 P132 BE132MA4**	**C903_134.1 P132 BX132MA4**	157
12.1	5492	2.2	120.5	85000	**C1003_120.5 S4 ME4LA4**	**C1003_120.5 S4 MX4LA4**	159	**C1003_120.5 P132 BE132MA4**	**C1003_120.5 P132 BX132MA4**	160
12.5	5319	1.4	116.7	58600	**C903_116.7 S4 ME4LA4**	**C903_116.7 S4 MX4LA4**	156	**C903_116.7 P132 BE132MA4**	**C903_116.7 P132 BX132MA4**	157
13.0	5100	2.4	111.9	85000	**C1003_111.9 S4 ME4LA4**	**C1003_111.9 S4 MX4LA4**	159	**C1003_111.9 P132 BE132MA4**	**C1003_111.9 P132 BX132MA4**	160
13.6	4876	1.5	107.0	58200	**C903_107.0 S4 ME4LA4**	**C903_107.0 S4 MX4LA4**	156	**C903_107.0 P132 BE132MA4**	**C903_107.0 P132 BX132MA4**	157
14.6	4548	2.6	99.8	85000	**C1003_99.8 S4 ME4LA4**	**C1003_99.8 S4 MX4LA4**	159	**C1003_99.8 P132 BE132MA4**	**C1003_99.8 P132 BX132MA4**	160
14.9	4438	0.9	97.4	34500	**C803_97.4 S4 ME4LA4**	**C803_97.4 S4 MX4LA4**	153	**C803_97.4 P132 BE132MA4**	**C803_97.4 P132 BX132MA4**	154
15.1	4386	1.6	96.2	57500	**C903_96.2 S4 ME4LA4**	**C903_96.2 S4 MX4LA4**	156	**C903_96.2 P132 BE132MA4**	**C903_96.2 P132 BX132MA4**	157
15.7	4223	2.8	92.7	85000	**C1003_92.7 S4 ME4LA4**	**C1003_92.7 S4 MX4LA4**	159	**C1003_92.7 P132 BE132MA4**	**C1003_92.7 P132 BX132MA4**	160
16.3	4068	1.0	89.3	35000	**C803_89.3 S4 ME4LA4**	**C803_89.3 S4 MX4LA4**	153	**C803_89.3 P132 BE132MA4**	**C803_89.3 P132 BX132MA4**	154
16.5	4020	1.8	88.2	56600	**C903_88.2 S4 ME4LA4**	**C903_88.2 S4 MX4LA4**	156	**C903_88.2 P132 BE132MA4**	**C903_88.2 P132 BX132MA4**	157
17.0	3899	3.1	85.6	85000	**C1003_85.6 S4 ME4LA4**	**C1003_85.6 S4 MX4LA4**	159	**C1003_85.6 P132 BE132MA4**	**C1003_85.6 P132 BX132MA4**	160
17.9	3701	1.9	81.2	56100	**C903_81.2 S4 ME4LA4**	**C903_81.2 S4 MX4LA4**	156	**C903_81.2 P132 BE132MA4**	**C903_81.2 P132 BX132MA4**	157
18.9	3505	1.1	76.9	35000	**C803_76.9 S4 ME4LA4**	**C803_76.9 S4 MX4LA4**	153	**C803_76.9 P132 BE132MA4**	**C803_76.9 P132 BX132MA4**	154
19.5	3392	2.1	74.4	55200	**C903_74.4 S4 ME4LA4**	**C903_74.4 S4 MX4LA4**	156	**C903_74.4 P132 BE132MA4**	**C903_74.4 P132 BX132MA4**	157
20.6	3213	1.2	70.5	35000	**C803_70.5 S4 ME4LA4**	**C803_70.5 S4 MX4LA4**	153	**C803_70.5 P132 BE132MA4**	**C803_70.5 P132 BX132MA4**	154
22.5	2943	2.4	64.6	54000	**C903_64.6 S4 ME4LA4**	**C903_64.6 S4 MX4LA4**	156	**C903_64.6 P132 BE132MA4**	**C903_64.6 P132 BX132MA4**	157
23.3	2848	1.4	62.5	35000	**C803_62.5 S4 ME4LA4**	**C803_62.5 S4 MX4LA4**	153	**C803_62.5 P132 BE132MA4**	**C803_62.5 P132 BX132MA4**	154
24.6	2698	2.6	59.2	53000	**C903_59.2 S4 ME4LA4**	**C903_59.2 S4 MX4LA4**	156	**C903_59.2 P132 BE132MA4**	**C903_59.2 P132 BX132MA4**	157
25.4	2611	1.5	57.3	35000	**C803_57.3 S4 ME4LA4**	**C803_57.3 S4 MX4LA4**	153	**C803_57.3 P132 BE132MA4**	**C803_57.3 P132 BX132MA4**	154
26.5	2501	2.9	54.9	52400	**C903_54.9 S4 ME4LA4**	**C903_54.9 S4 MX4LA4**	156	**C903_54.9 P132 BE132MA4**	**C903_54.9 P132 BX132MA4**	157
27.9	2377	1.0	52.2	22900	**C703_52.2 S4 ME4LA4**	**C703_52.2 S4 MX4LA4**	150	**C703_52.2 P132 BE132MA4**	**C703_52.2 P132 BX132MA4**	151
31	2162	1.8	47.4	35000	**C803_47.4 S4 ME4LA4**	**C803_47.4 S4 MX4LA4**	153	**C803_47.4 P132 BE132MA4**	**C803_47.4 P132 BX132MA4**	154
33	2037	1.1	44.7	22500	**C703_44.7 S4 ME4LA4**	**C703_44.7 S4 MX4LA4**	150	**C703_44.7 P132 BE132MA4**	**C703_44.7 P132 BX132MA4**	151
33	1982	1.9	43.5	35000	**C803_43.5 S4 ME4LA4**	**C803_43.5 S4 MX4LA4**	153	**C803_43.5 P132 BE132MA4**	**C803_43.5 P132 BX132MA4**	154
35	1880	1.2	41.3	22300	**C703_41.3 S4 ME4LA4**	**C703_41.3 S4 MX4LA4**	150	**C703_41.3 P132 BE132MA4**	**C703_41.3 P132 BX132MA4**	151
37	1821	1.8	39.1	33600	**C802_39.1 S4 ME4LA4**	**C802_39.1 S4 MX4LA4**	153	**C802_39.1 P132 BE132MA4**	**C802_39.1 P132 BX132MA4**	154

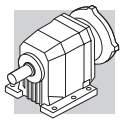

7.5 kW

n_2 min-1	M_2 Nm	S	i	R_{n2} N	IE2	IE3		IEC IE2	IEC IE3	
40	1594	1.0	36.1	13300	**C613_36.1 S4 ME4LA4**	**C613_36.1 S4 MX4LA4**	146	**C613_36.1 P132 BE132MA4**	**C613_36.1 P132 BX132MA4**	147
41	1634	3.3	35.1	47300	**C902_35.1 S4 ME4LA4**	**C902_35.1 S4 MX4LA4**	156	**C902_35.1 P132 BE132MA4**	**C902_35.1 P132 BX132MA4**	157
42	1617	1.3	34.7	20500	**C702_34.7 S4 ME4LA4**	**C702_34.7 S4 MX4LA4**	150	**C702_34.7 P132 BE132MA4**	**C702_34.7 P132 BX132MA4**	151
44	1454	1.0	33.0	13100	**C613_33.0 S4 ME4LA4**	**C613_33.0 S4 MX4LA4**	146	**C613_33.0 P132 BE132MA4**	**C613_33.0 P132 BX132MA4**	147
46	1459	2.5	31.3	32200	**C802_31.3 S4 ME4LA4**	**C802_31.3 S4 MX4LA4**	153	**C802_31.3 P132 BE132MA4**	**C802_31.3 P132 BX132MA4**	154
48	1417	1.0	30.4	13000	**C612_30.4 S4 ME4LA4**	**C612_30.4 S4 MX4LA4**	146	**C612_30.4 P132 BE132MA4**	**C612_30.4 P132 BX132MA4**	147
50	1295	1.1	29.4	13100	**C613_29.4 S4 ME4LA4**	**C613_29.4 S4 MX4LA4**	146	**C613_29.4 P132 BE132MA4**	**C613_29.4 P132 BX132MA4**	147
52	1290	1.6	27.7	20000	**C702_27.7 S4 ME4LA4**	**C702_27.7 S4 MX4LA4**	150	**C702_27.7 P132 BE132MA4**	**C702_27.7 P132 BX132MA4**	151
53	1276	1.1	27.4	12800	**C612_27.4 S4 ME4LA4**	**C612_27.4 S4 MX4LA4**	146	**C612_27.4 P132 BE132MA4**	**C612_27.4 P132 BX132MA4**	147
56	1208	3.1	25.9	31000	**C802_25.9 S4 ME4LA4**	**C802_25.9 S4 MX4LA4**	153	**C802_25.9 P132 BE132MA4**	**C802_25.9 P132 BX132MA4**	154
59	1155	1.2	24.8	12700	**C612_24.8 S4 ME4LA4**	**C612_24.8 S4 MX4LA4**	146	**C612_24.8 P132 BE132MA4**	**C612_24.8 P132 BX132MA4**	147
61	1115	3.2	24.0	30500	**C802_24.0 S4 ME4LA4**	**C802_24.0 S4 MX4LA4**	153	**C802_24.0 P132 BE132MA4**	**C802_24.0 P132 BX132MA4**	154
64	1064	2.0	22.9	19400	**C702_22.9 S4 ME4LA4**	**C702_22.9 S4 MX4LA4**	150	**C702_22.9 P132 BE132MA4**	**C702_22.9 P132 BX132MA4**	151
65	1040	1.3	22.4	12500	**C612_22.4 S4 ME4LA4**	**C612_22.4 S4 MX4LA4**	146	**C612_22.4 P132 BE132MA4**	**C612_22.4 P132 BX132MA4**	147
65	1035	3.6	22.2	30000	**C802_22.2 S4 ME4LA4**	**C802_22.2 S4 MX4LA4**	153	**C802_22.2 P132 BE132MA4**	**C802_22.2 P132 BX132MA4**	154
67	994	0.9	21.8	7200	**C513_21.8 S4 ME4LA4**	**C513_21.8 S4 MX4LA4**	142	**C513_21.8 P132 BE132MA4**	**C513_21.8 P132 BX132MA4**	143
74	912	1.5	19.6	12300	**C612_19.6 S4 ME4LA4**	**C612_19.6 S4 MX4LA4**	146	**C612_19.6 P132 BE132MA4**	**C612_19.6 P132 BX132MA4**	147
75	898	2.3	19.3	18900	**C702_19.3 S4 ME4LA4**	**C702_19.3 S4 MX4LA4**	150	**C702_19.3 P132 BE132MA4**	**C702_19.3 P132 BX132MA4**	151
77	879	0.9	18.9	7100	**C512_18.9 S4 ME4LA4**	**C512_18.9 S4 MX4LA4**	142	**C512_18.9 P132 BE132MA4**	**C512_18.9 P132 BX132MA4**	143
82	822	1.6	17.7	12000	**C612_17.7 S4 ME4LA4**	**C612_17.7 S4 MX4LA4**	146	**C612_17.7 P132 BE132MA4**	**C612_17.7 P132 BX132MA4**	147
87	778	2.6	16.7	18200	**C702_16.7 S4 ME4LA4**	**C702_16.7 S4 MX4LA4**	150	**C702_16.7 P132 BE132MA4**	**C702_16.7 P132 BX132MA4**	151
88	773	1.0	16.6	8070	**C512_16.6 S4 ME4LA4**	**C512_16.6 S4 MX4LA4**	142	**C512_16.6 P132 BE132MA4**	**C512_16.6 P132 BX132MA4**	143
91	742	1.8	15.9	11800	**C612_15.9 S4 ME4LA4**	**C612_15.9 S4 MX4LA4**	146	**C612_15.9 P132 BE132MA4**	**C612_15.9 P132 BX132MA4**	147
95	714	2.9	15.3	18000	**C702_15.3 S4 ME4LA4**	**C702_15.3 S4 MX4LA4**	150	**C702_15.3 P132 BE132MA4**	**C702_15.3 P132 BX132MA4**	151
97	697	1.1	15.0	8000	**C512_15.0 S4 ME4LA4**	**C512_15.0 S4 MX4LA4**	142	**C512_15.0 P132 BE132MA4**	**C512_15.0 P132 BX132MA4**	143
101	668	2.0	14.3	11500	**C612_14.3 S4 ME4LA4**	**C612_14.3 S4 MX4LA4**	146	**C612_14.3 P132 BE132MA4**	**C612_14.3 P132 BX132MA4**	147
111	611	1.2	13.1	7840	**C512_13.1 S4 ME4LA4**	**C512_13.1 S4 MX4LA4**	142	**C512_13.1 P132 BE132MA4**	**C512_13.1 P132 BX132MA4**	143
120	563	2.4	12.1	11100	**C612_12.1 S4 ME4LA4**	**C612_12.1 S4 MX4LA4**	146	**C612_12.1 P132 BE132MA4**	**C612_12.1 P132 BX132MA4**	147
123	551	1.4	11.8	7730	**C512_11.8 S4 ME4LA4**	**C512_11.8 S4 MX4LA4**	142	**C512_11.8 P132 BE132MA4**	**C512_11.8 P132 BX132MA4**	143
134	507	2.7	10.9	10900	**C612_10.9 S4 ME4LA4**	**C612_10.9 S4 MX4LA4**	146	**C612_10.9 P132 BE132MA4**	**C612_10.9 P132 BX132MA4**	147
148	457	3.0	9.8	10600	**C612_9.8 S4 ME4LA4**	**C612_9.8 S4 MX4LA4**	146	**C612_9.8 P132 BE132MA4**	**C612_9.8 P132 BX132MA4**	147
149	454	1.5	9.8	7450	**C512_9.8 S4 ME4LA4**	**C512_9.8 S4 MX4LA4**	142	**C512_9.8 P132 BE132MA4**	**C512_9.8 P132 BX132MA4**	143
152	447	0.9	9.6	3300	**C412_9.6 S4 ME4LA4**	**C412_9.6 S4 MX4LA4**	138	**C412_9.6 P132 BE132MA4**	**C412_9.6 P132 BX132MA4**	139
165	412	3.3	8.8	10300	**C612_8.8 S4 ME4LA4**	**C612_8.8 S4 MX4LA4**	146	**C612_8.8 P132 BE132MA4**	**C612_8.8 P132 BX132MA4**	147
165	410	0.9	8.8	2880	**C362_8.8 S4 ME4LA4**	**C362_8.8 S4 MX4LA4**	134	**C362_8.8 P132 BE132MA4**	**C362_8.8 P132 BX132MA4**	135
166	409	1.7	8.8	7320	**C512_8.8 S4 ME4LA4**	**C512_8.8 S4 MX4LA4**	142	**C512_8.8 P132 BE132MA4**	**C512_8.8 P132 BX132MA4**	143
168	402	1.0	8.6	3430	**C412_8.6 S4 ME4LA4**	**C412_8.6 S4 MX4LA4**	138	**C412_8.6 P132 BE132MA4**	**C412_8.6 P132 BX132MA4**	139
181	374	1.0	8.0	2900	**C362_8.0 S4 ME4LA4**	**C362_8.0 S4 MX4LA4**	134	**C362_8.0 P132 BE132MA4**	**C362_8.0 P132 BX132MA4**	135
188	361	1.8	7.8	7120	**C512_7.8 S4 ME4LA4**	**C512_7.8 S4 MX4LA4**	142	**C512_7.8 P132 BE132MA4**	**C512_7.8 P132 BX132MA4**	143
206	329	1.1	7.1	3470	**C412_7.1 S4 ME4LA4**	**C412_7.1 S4 MX4LA4**	138	**C412_7.1 P132 BE132MA4**	**C412_7.1 P132 BX132MA4**	139
208	325	1.9	7.0	6970	**C512_7.0 S4 ME4LA4**	**C512_7.0 S4 MX4LA4**	142	**C512_7.0 P132 BE132MA4**	**C512_7.0 P132 BX132MA4**	143
215	316	1.1	6.8	2900	**C362_6.8 S4 ME4LA4**	**C362_6.8 S4 MX4LA4**	134	**C362_6.8 P132 BE132MA4**	**C362_6.8 P132 BX132MA4**	135
229	296	1.2	6.4	3440	**C412_6.4 S4 ME4LA4**	**C412_6.4 S4 MX4LA4**	138	**C412_6.4 P132 BE132MA4**	**C412_6.4 P132 BX132MA4**	139
242	279	2.4	6.0	9180	**C612_6.0 S4 ME4LA4**	**C612_6.0 S4 MX4LA4**	146	**C612_6.0 P132 BE132MA4**	**C612_6.0 P132 BX132MA4**	147
244	277	0.9	6.0	2920	**C412_6.0 S4 ME4LA4**	**C412_6.0 S4 MX4LA4**	138	**C412_6.0 P132 BE132MA4**	**C412_6.0 P132 BX132MA4**	139
258	262	1.7	5.6	6410	**C512_5.6 S4 ME4LA4**	**C512_5.6 S4 MX4LA4**	142	**C512_5.6 P132 BE132MA4**	**C512_5.6 P132 BX132MA4**	143
312	217	1.2	4.7	2960	**C412_4.7 S4 ME4LA4**	**C412_4.7 S4 MX4LA4**	138	**C412_4.7 P132 BE132MA4**	**C412_4.7 P132 BX132MA4**	139
315	215	0.9	4.6	2600	**C362_4.6 S4 ME4LA4**	**C362_4.6 S4 MX4LA4**	134	**C362_4.6 P132 BE132MA4**	**C362_4.6 P132 BX132MA4**	135
319	212	3.1	4.6	8550	**C612_4.6 S4 ME4LA4**	**C612_4.6 S4 MX4LA4**	146	**C612_4.6 P132 BE132MA4**	**C612_4.6 P132 BX132MA4**	147
327	207	2.1	4.5	6090	**C512_4.5 S4 ME4LA4**	**C512_4.5 S4 MX4LA4**	142	**C512_4.5 P132 BE132MA4**	**C512_4.5 P132 BX132MA4**	143
342	199	3.3	2.8	8390	**C612_2.8 S5 ME5SB6**		146	**C612_2.8 P160 BE160MB6**		147
346	196	1.0	4.2	2550	**C362_4.2 S4 ME4LA4**	**C362_4.2 S4 MX4LA4**	134	**C362_4.2 P132 BE132MA4**	**C362_4.2 P132 BX132MA4**	135
367	185	2.2	2.6	5920	**C512_2.6 S5 ME5SB6**		142	**C512_2.6 P160 BE160MB6**		143
403	168	1.5	3.6	2930	**C412_3.6 S4 ME4LA4**	**C412_3.6 S4 MX4LA4**	138	**C412_3.6 P132 BE132MA4**	**C412_3.6 P132 BX132MA4**	139
414	164	2.2	7.1	3240	**C412_7.1 S4 ME4LA2**		138	**C412_7.1 P132 BE132SB2**		139
417	162	1.2	3.5	2500	**C362_3.5 S4 ME4LA4**	**C362_3.5 S4 MX4LA4**	134	**C362_3.5 P132 BE132MA4**	**C362_3.5 P132 BX132MA4**	135
440	154	2.7	3.3	5660	**C512_3.3 S4 ME4LA4**	**C512_3.3 S4 MX4LA4**	142	**C512_3.3 P132 BE132MA4**	**C512_3.3 P132 BX132MA4**	143

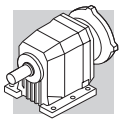

7.5 kW

n_2 min-1	M_2 Nm	S	i	R_{n2} N	IE2	IE3		IEC IE2	IEC IE3	
457	148	1.4	3.2	2500	**C362_3.2 S4 ME4LA4**	**C362_3.2 S4 MX4LA4**	134	**C362_3.2 P132 BE132MA4**	**C362_3.2 P132 BX132MA4**	135
460	148	2.3	6.4	3170	**C412_6.4 S4 ME4LA2**		138	**C412_6.4 P132 BE132SB2**		139
491	138	1.9	6.0	2880	**C412_6.0 S4 ME4LA2**		138	**C412_6.0 P132 BE132SB2**		139
505	134	1.0	2.9	2100	**C322_2.9 S4 ME4LA4**	**C322_2.9 S4 MX4LA4**	130	**C322_2.9 P132 BN132MA4**	**C322_2.9 P132 BX132MA4**	131
519	131	3.3	5.6	5420	**C512_5.6 S4 ME4LA2**		142	**C512_5.6 P132 BE132SB2**		143
542	125	1.6	2.7	2440	**C362_2.7 S4 ME4LA4**	**C362_2.7 S4 MX4LA4**	134	**C362_2.7 P132 BE132MA4**	**C362_2.7 P132 BX132MA4**	135
547	124	2.0	2.7	2840	**C412_2.7 S4 ME4LA4**	**C412_2.7 S4 MX4LA4**	138	**C412_2.7 P132 BE132MA4**	**C412_2.7 P132 BX132MA4**	139
553	122	3.3	2.6	5330	**C512_2.6 S4 ME4LA4**	**C512_2.6 S4 MX4LA4**	142	**C512_2.6 P132 BE132MA4**	**C512_2.6 P132 BX132MA4**	143
554	123	1.6	5.3	2370	**C362_5.3 S4 ME4LA2**		134	**C362_5.3 P132 BE132SB2**		135
627	108	2.4	4.7	2790	**C412_4.7 S4 ME4LA2**		138	**C412_4.7 P132 BE132SB2**		139
633	108	1.9	4.6	2330	**C362_4.6 S4 ME4LA2**		134	**C362_4.6 P132 BE132SB2**		135
696	98	2.0	4.2	2290	**C362_4.2 S4 ME4LA2**		134	**C362_4.2 P132 BE132SB2**		135
810	84	3.0	3.6	2670	**C412_3.6 S4 ME4LA2**		138	**C412_3.6 P132 BE132SB2**		139
839	81	2.5	3.5	2210	**C362_3.5 S4 ME4LA2**		134	**C362_3.5 P132 BE132SB2**		135
919	74	2.7	3.2	2170	**C362_3.2 S4 ME4LA2**		134	**C362_3.2 P132 BE132SB2**		135
1089	62	3.2	2.7	2100	**C362_2.7 S4 ME4LA2**		134	**C362_2.7 P132 BE132SB2**		135

9.2 kW

n_2 min-1	M_2 Nm	S	i	R_{n2} N	IE2	IE3		IEC IE2	IEC IE3	
5.9	13408	0.9	244.2	85000	**C1004_244.2 S4 ME4LB4**		159	**C1004_244.2 P132 BE132MB4**	**C1004_244.2 P160 BX160MA4**	160
7.3	10960	1.1	199.6	85000	**C1004_199.6 S4 ME4LB4**		159	**C1004_199.6 P132 BE132MB4**	**C1004_199.6 P160 BX160MA4**	160
7.8	10177	1.2	185.4	85000	**C1004_185.4 S4 ME4LB4**		159	**C1004_185.4 P132 BE132MB4**	**C1004_185.4 P160 BX160MA4**	160
8.9	8900	1.3	162.1	85000	**C1004_162.1 S4 ME4LB4**		159	**C1004_162.1 P132 BE132MB4**	**C1004_162.1 P160 BX160MA4**	160
9.6	8534	1.4	150.4	85000	**C1003_150.4 S4 ME4LB4**	**C1003_150.4 S5 MX5SA4**	159	**C1003_150.4 P132 BE132MB4**	**C1003_150.4 P160 BX160MA4**	160
10.4	7924	1.4	139.7	85000	**C1003_139.7 S4 ME4LB4**	**C1003_139.7 S5 MX5SA4**	159	**C1003_139.7 P132 BE132MB4**	**C1003_139.7 P160 BX160MA4**	160
10.8	7610	0.9	134.1	54900	**C903_134.1 S4 ME4LB4**	**C903_134.1 S5 MX5SA4**	156	**C903_134.1 P132 BE132MB4**	**C903_134.1 P160 BX160MA4**	157
12.0	6837	1.8	120.5	85000	**C1003_120.5 S4 ME4LB4**	**C1003_120.5 S5 MX5SA4**	159	**C1003_120.5 P132 BE132MB4**	**C1003_120.5 P160 BX160MA4**	160
12.4	6622	1.1	116.7	54800	**C903_116.7 S4 ME4LB4**	**C903_116.7 S5 MX5SA4**	156	**C903_116.7 P132 BE132MB4**	**C903_116.7 P160 BX160MA4**	157
13.0	6348	1.9	111.9	85000	**C1003_111.9 S4 ME4LB4**	**C1003_111.9 S5 MX5SA4**	159	**C1003_111.9 P132 BE132MB4**	**C1003_111.9 P160 BX160MA4**	160
13.6	6070	1.2	107.0	54600	**C903_107.0 S4 ME4LB4**	**C903_107.0 S5 MX5SA4**	156	**C903_107.0 P132 BE132MB4**	**C903_107.0 P160 BX160MA4**	157
14.5	5662	2.1	99.8	85000	**C1003_99.8 S4 ME4LB4**	**C1003_99.8 S5 MX5SA4**	159	**C1003_99.8 P132 BE132MB4**	**C1003_99.8 P160 BX160MA4**	160
15.1	5460	1.3	96.2	54200	**C903_96.2 S4 ME4LB4**	**C903_96.2 S5 MX5SA4**	156	**C903_96.2 P132 BE132MB4**	**C903_96.2 P160 BX160MA4**	157
15.6	5257	2.3	92.7	85000	**C1003_92.7 S4 ME4LB4**	**C1003_92.7 S5 MX5SA4**	159	**C1003_92.7 P132 BE132MB4**	**C1003_92.7 P160 BX160MA4**	160
16.4	5005	1.4	88.2	53700	**C903_88.2 S4 ME4LB4**	**C903_88.2 S5 MX5SA4**	156	**C903_88.2 P132 BE132MB4**	**C903_88.2 P160 BX160MA4**	157
16.9	4854	2.5	85.6	85000	**C1003_85.6 S4 ME4LB4**	**C1003_85.6 S5 MX5SA4**	159	**C1003_85.6 P132 BE132MB4**	**C1003_85.6 P160 BX160MA4**	160
17.9	4607	1.6	81.2	53300	**C903_81.2 S4 ME4LB4**	**C903_81.2 S5 MX5SA4**	156	**C903_81.2 P132 BE132MB4**	**C903_81.2 P160 BX160MA4**	157
18.3	4507	2.7	79.4	85000	**C1003_79.4 S4 ME4LB4**	**C1003_79.4 S5 MX5SA4**	159	**C1003_79.4 P132 BE132MB4**	**C1003_79.4 P160 BX160MA4**	160
18.9	4363	0.9	76.9	33700	**C803_76.9 S4 ME4LB4**	**C803_76.9 S5 MX5SA4**	153	**C803_76.9 P132 BE132MB4**	**C803_76.9 P160 BX160MA4**	154
19.5	4223	1.7	74.4	52700	**C903_74.4 S4 ME4LB4**	**C903_74.4 S5 MX5SA4**	156	**C903_74.4 P132 BE132MB4**	**C903_74.4 P160 BX160MA4**	157
20.6	4000	1.0	70.5	35000	**C803_70.5 S4 ME4LB4**	**C803_70.5 S5 MX5SA4**	153	**C803_70.5 P132 BE132MB4**	**C803_70.5 P160 BX160MA4**	154
22.5	3664	2.0	64.6	51800	**C903_64.6 S4 ME4LB4**	**C903_64.6 S5 MX5SA4**	156	**C903_64.6 P132 BE132MB4**	**C903_64.6 P160 BX160MA4**	157
23.2	3546	1.1	62.5	35000	**C803_62.5 S4 ME4LB4**	**C803_62.5 S5 MX5SA4**	153	**C803_62.5 P132 BE132MB4**	**C803_62.5 P160 BX160MA4**	154
24.5	3358	2.1	59.2	51100	**C903_59.2 S4 ME4LB4**	**C903_59.2 S5 MX5SA4**	156	**C903_59.2 P132 BE132MB4**	**C903_59.2 P160 BX160MA4**	157
25.3	3250	1.2	57.3	35000	**C803_57.3 S4 ME4LB4**	**C803_57.3 S5 MX5SA4**	153	**C803_57.3 P132 BE132MB4**	**C803_57.3 P160 BX160MA4**	154
26.4	3113	2.3	54.9	50500	**C903_54.9 S4 ME4LB4**	**C903_54.9 S5 MX5SA4**	156	**C903_54.9 P132 BE132MB4**	**C903_54.9 P160 BX160MA4**	157
28.8	2854	2.5	50.3	49700	**C903_50.3 S4 ME4LB4**	**C903_50.3 S5 MX5SA4**	156	**C903_50.3 P132 BE132MB4**	**C903_50.3 P160 BX160MA4**	157
31	2692	1.4	47.4	34900	**C803_47.4 S4 ME4LB4**	**C803_47.4 S5 MX5SA4**	153	**C803_47.4 P132 BE132MB4**	**C803_47.4 P160 BX160MA4**	154
32	2536	0.9	44.7	21100	**C703_44.7 S4 ME4LB4**	**C703_44.7 S5 MX5SA4**	150	**C703_44.7 P132 BE132MB4**	**C703_44.7 P160 BX160MA4**	151
33	2467	1.5	43.5	34400	**C803_43.5 S4 ME4LB4**	**C803_43.5 S5 MX5SA4**	153	**C803_43.5 P132 BE132MB4**	**C803_43.5 P160 BX160MA4**	154
34	2439	3.0	43.0	48300	**C903_43.0 S4 ME4LB4**	**C903_43.0 S5 MX5SA4**	156	**C903_43.0 P132 BE132MB4**	**C903_43.0 P160 BX160MA4**	157
35	2341	1.0	41.3	21000	**C703_41.3 S4 ME4LB4**	**C703_41.3 S5 MX5SA4**	150	**C703_41.3 P132 BE132MB4**	**C703_41.3 P160 BX160MA4**	151
37	2266	1.4	39.1	32300	**C802_39.1 S4 ME4LB4**	**C802_39.1 S5 MX5SA4**	153	**C802_39.1 P132 BE132MB4**	**C802_39.1 P160 BX160MA4**	154

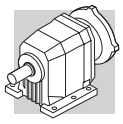

9.2 kW

n_2 min-1	M_2 Nm	S	i	R_{n2} N	IE2	IE3		IEC IE2	IEC IE3	
41	2034	2.7	35.1	46200	**C902_35.1 S4 ME4LB4**	**C902_35.1 S5 MX5SA4**	156	**C902_35.1 P132 BE132MB4**	**C902_35.1 P160 BX160MA4**	157
42	2014	1.0	34.7	19200	**C702_34.7 S4 ME4LB4**	**C702_34.7 S5 MX5SA4**	150	**C702_34.7 P132 BE132MB4**	**C702_34.7 P160 BX160MA4**	151
46	1816	2.0	31.3	31100	**C802_31.3 S4 ME4LB4**	**C802_31.3 S5 MX5SA4**	153	**C802_31.3 P132 BE132MB4**	**C802_31.3 P160 BX160MA4**	154
49	1706	3.5	29.4	44600	**C902_29.4 S4 ME4LB4**	**C902_29.4 S5 MX5SA4**	156	**C902_29.4 P132 BE132MB4**	**C902_29.4 P160 BX160MA4**	157
49	1612	0.9	29.4	10500	**C613_29.4 S4 ME4LB4**	**C613_29.4 S5 MX5SA4**	146	**C613_29.4 P132 BE132MB4**	**C613_29.4 P160 BX160MA4**	147
52	1606	1.3	27.7	18900	**C702_27.7 S4 ME4LB4**	**C702_27.7 S5 MX5SA4**	150	**C702_27.7 P132 BE132MB4**	**C702_27.7 P160 BX160MA4**	151
54	1470	1.0	26.8	11400	**C613_26.8 S4 ME4LB4**	**C613_26.8 S5 MX5SA4**	146	**C613_26.8 P132 BE132MB4**	**C613_26.8 P160 BX160MA4**	147
56	1504	2.5	25.9	30300	**C802_25.9 S4 ME4LB4**	**C802_25.9 S5 MX5SA4**	153	**C802_25.9 P132 BE132MB4**	**C802_25.9 P160 BX160MA4**	154
58	1438	0.9	24.8	11800	**C612_24.8 S4 ME4LB4**	**C612_24.8 S5 MX5SA4**	146	**C612_24.8 P132 BE132MB4**	**C612_24.8 P160 BX160MA4**	147
61	1388	2.6	24.0	30000	**C802_24.0 S4 ME4LB4**	**C802_24.0 S5 MX5SA4**	153	**C802_24.0 P132 BE132MB4**	**C802_24.0 P160 BX160MA4**	154
63	1324	1.6	22.9	18500	**C702_22.9 S4 ME4LB4**	**C702_22.9 S5 MX5SA4**	150	**C702_22.9 P132 BE132MB4**	**C702_22.9 P160 BX160MA4**	151
65	1295	1.0	22.4	11700	**C612_22.4 S4 ME4LB4**	**C612_22.4 S5 MX5SA4**	146	**C612_22.4 P132 BE132MB4**	**C612_22.4 P160 BX160MA4**	147
65	1289	2.9	22.2	29200	**C802_22.2 S4 ME4LB4**	**C802_22.2 S5 MX5SA4**	153	**C802_22.2 P132 BE132MB4**	**C802_22.2 P160 BX160MA4**	154
71	1190	3.0	20.5	28900	**C802_20.5 S4 ME4LB4**	**C802_20.5 S5 MX5SA4**	153	**C802_20.5 P132 BE132MB4**	**C802_20.5 P160 BX160MA4**	154
74	1136	1.2	19.6	11600	**C612_19.6 S4 ME4LB4**	**C612_19.6 S5 MX5SA4**	146	**C612_19.6 P132 BE132MB4**	**C612_19.6 P160 BX160MA4**	147
75	1118	1.9	19.3	18100	**C702_19.3 S4 ME4LB4**	**C702_19.3 S5 MX5SA4**	150	**C702_19.3 P132 BE132MB4**	**C702_19.3 P160 BX160MA4**	151
82	1023	1.3	17.7	11400	**C612_17.7 S4 ME4LB4**	**C612_17.7 S5 MX5SA4**	146	**C612_17.7 P132 BE132MB4**	**C612_17.7 P160 BX160MA4**	147
87	968	2.1	16.7	17500	**C702_16.7 S4 ME4LB4**	**C702_16.7 S5 MX5SA4**	150	**C702_16.7 P132 BE132MB4**	**C702_16.7 P160 BX160MA4**	151
91	923	1.5	15.9	11200	**C612_15.9 S4 ME4LB4**	**C612_15.9 S5 MX5SA4**	146	**C612_15.9 P132 BE132MB4**	**C612_15.9 P160 BX160MA4**	147
95	889	2.4	15.3	17500	**C702_15.3 S4 ME4LB4**	**C702_15.3 S5 MX5SA4**	150	**C702_15.3 P132 BE132MB4**	**C702_15.3 P160 BX160MA4**	151
97	867	0.9	15.0	7430	**C512_15.0 S4 ME4LB4**	**C512_15.0 S5 MX5SA4**	142	**C512_15.0 P132 BE132MB4**	**C512_15.0 P160 BX160MA4**	143
101	831	1.6	14.3	11000	**C612_14.3 S4 ME4LB4**	**C612_14.3 S5 MX5SA4**	146	**C612_14.3 P132 BE132MB4**	**C612_14.3 P160 BX160MA4**	147
103	817	2.6	14.1	17000	**C702_14.1 S4 ME4LB4**	**C702_14.1 S5 MX5SA4**	150	**C702_14.1 P132 BE132MB4**	**C702_14.1 P160 BX160MA4**	151
110	761	1.0	13.1	7340	**C512_13.1 S4 ME4LB4**	**C512_13.1 S5 MX5SA4**	142	**C512_13.1 P132 BE132MB4**	**C512_13.1 P160 BX160MA4**	143
111	755	2.8	13.0	17000	**C702_13.0 S4 ME4LB4**	**C702_13.0 S5 MX5SA4**	150	**C702_13.0 P132 BE132MB4**	**C702_13.0 P160 BX160MA4**	151
120	701	1.9	12.1	10700	**C612_12.1 S4 ME4LB4**	**C612_12.1 S5 MX5SA4**	146	**C612_12.1 P132 BE132MB4**	**C612_12.1 P160 BX160MA4**	147
123	686	1.1	11.8	7280	**C512_11.8 S4 ME4LB4**	**C512_11.8 S5 MX5SA4**	142	**C512_11.8 P132 BE132MB4**	**C512_11.8 P160 BX160MA4**	143
128	653	3.2	22.9	16500	**C702_22.9 S4 ME4LB2**	**C702_22.9 S5 ME4LB2**	150	**C702_22.9 P132 BE132MB2**	**C702_22.9 P160 BE132MB2**	151
133	631	2.1	10.9	10500	**C612_10.9 S4 ME4LB4**	**C612_10.9 S5 MX5SA4**	146	**C612_10.9 P132 BE132MB4**	**C612_10.9 P160 BX160MA4**	147
148	569	2.4	9.8	10300	**C612_9.8 S4 ME4LB4**	**C612_9.8 S5 MX5SA4**	146	**C612_9.8 P132 BE132MB4**	**C612_9.8 P160 BX160MA4**	147
149	565	1.2	9.8	7080	**C512_9.8 S4 ME4LB4**	**C512_9.8 S5 MX5SA4**	142	**C512_9.8 P132 BE132MB4**	**C512_9.8 P160 BX160MA4**	143
164	512	2.6	8.8	10000	**C612_8.8 S4 ME4LB4**	**C612_8.8 S5 MX5SA4**	146	**C612_8.8 P132 BE132MB4**	**C612_8.8 P160 BX160MA4**	147
165	509	1.3	8.8	6990	**C512_8.8 S4 ME4LB4**	**C512_8.8 S5 MX5SA4**	142	**C512_8.8 P132 BE132MB4**	**C512_8.8 P160 BX160MA4**	143
187	449	1.4	7.8	6820	**C512_7.8 S4 ME4LB4**	**C512_7.8 S5 MX5SA4**	142	**C512_7.8 P132 BE132MB4**	**C512_7.8 P160 BX160MA4**	143
194	434	3.1	7.5	9670	**C612_7.5 S4 ME4LB4**	**C612_7.5 S5 MX5SA4**	146	**C612_7.5 P132 BE132MB4**	**C612_7.5 P160 BX160MA4**	147
208	405	1.6	7.0	6710	**C512_7.0 S4 ME4LB4**	**C512_7.0 S5 MX5SA4**	142	**C512_7.0 P132 BE132MB4**	**C512_7.0 P160 BX160MA4**	143
215	391	3.5	6.7	9410	**C612_6.7 S4 ME4LB4**	**C612_6.7 S5 MX5SA4**	146	**C612_6.7 P132 BE132MB4**	**C612_6.7 P160 BX160MA4**	147
228	369	0.9	6.4	3100	**C412_6.4 S4 ME4LB4**		138	**C412_6.4 P132 BE132MB4**		139
242	348	1.9	6.0	8930	**C612_6.0 S4 ME4LB4**	**C612_6.0 S5 MX5SA4**	146	**C612_6.0 P132 BE132MB4**	**C612_6.0 P160 BX160MA4**	147
258	326	1.3	5.6	6150	**C512_5.6 S4 ME4LB4**	**C512_5.6 S5 MX5SA4**	142	**C512_5.6 P132 BE132MB4**	**C512_5.6 P160 BX160MA4**	143
262	319	1.3	11.2	3110	**C412_11.2 S4 ME4LB2**		138	**C412_11.2 P132 BE132MB2**		139
311	270	1.0	4.7	2620	**C412_4.7 S4 ME4LB4**		138	**C412_4.7 P132 BE132MB4**		139
318	264	2.5	4.6	8360	**C612_4.6 S4 ME4LB4**	**C612_4.6 S5 MX5SA4**	146	**C612_4.6 P132 BE132MB4**	**C612_4.6 P160 BX160MA4**	147
326	258	1.7	4.5	5880	**C512_4.5 S4 ME4LB4**	**C512_4.5 S5 MX5SA4**	142	**C512_4.5 P132 BE132MB4**	**C512_5.6 P160 BX160MA4**	143
338	247	1.6	8.6	3090	**C412_8.6 S4 ME4LB2**		138	**C412_8.6 P132 BE132MB2**		139
377	222	2.9	7.8	5870	**C512_7.8 S4 ME4LB2**		142	**C512_7.8 P132 BE132MB2**		143
402	209	1.2	3.6	2670	**C412_3.6 S4 ME4LB4**		138	**C412_3.6 P132 BE132MB4**		139
413	202	1.8	7.1	3050	**C412_7.1 S4 ME4LB2**		138	**C412_7.1 P132 BE132MB2**		139
416	202	1.0	3.5	2300	**C362_3.5 S4 ME4LB4**		134	**C362_3.5 P132 BE132MB4**		135
418	200	3.2	7.0	5730	**C512_7.0 S4 ME4LB2**		142	**C512_7.0 P132 BE132MB2**		143
438	192	2.2	3.3	5510	**C512_3.3 S4 ME4LB4**	**C512_3.3 S5 MX5SA4**	142	**C512_3.3 P132 BE132MB4**	**C512_3.3 P160 BX160MA4**	143
456	184	1.1	3.2	2300	**C362_3.2 S4 ME4LB4**		134	**C362_3.2 P132 BE132MB4**		135
459	182	1.9	6.4	3000	**C412_6.4 S4 ME4LB2**		138	**C412_6.4 P132 BE132MB2**		139
491	170	1.5	6.0	2660	**C412_6.0 S4 ME4LB2**		138	**C412_6.0 P132 BE132MB2**		139
519	161	2.7	5.6	5290	**C512_5.6 S4 ME4LB2**		142	**C512_5.6 P132 BE132MB2**		143
540	156	1.3	2.7	2280	**C362_2.7 S4 ME4LB4**		134	**C362_2.7 P132 BE132MB4**		135
545	154	1.6	2.7	2650	**C412_2.7 S4 ME4LB4**		138	**C412_2.7 P132 BE132MB4**		139

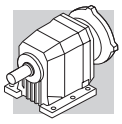

9.2 kW

n_2 min-1	M_2 Nm	S	i	R_{n2} N	IE2	IE3		IE2	IEC IE3	
552	152	2.6	2.6	5210	**C512_2.6 S4 ME4LB4**	**C512_2.6 S5 MX5SA4**	142	**C512_2.6 P132 BE132MB4**	**C512_2.6 P160 BX160MA4**	143
626	133	2.0	4.7	2620	**C412_4.7 S4 ME4LB2**		138	**C412_4.7 P132 BE132MB2**		139
656	127	3.4	4.5	4980	**C512_4.5 S4 ME4LB2**		142	**C512_4.5 P132 BE132MB2**		143
695	120	1.7	4.2	2180	**C362_4.2 S4 ME4LB2**		134	**C362_4.2 P132 BE132MB2**		135
809	103	2.5	3.6	2540	**C412_3.6 S4 ME4LB2**		138	**C412_3.6 P132 BE132MB2**		139
838	100	2.0	3.5	2120	**C362_3.5 S4 ME4LB2**		134	**C362_3.5 P132 BE132MB2**		135
918	91	2.2	3.2	2090	**C362_3.2 S4 ME4LB2**		134	**C362_3.2 P132 BE132MB2**		135
1087	77	2.6	2.7	2020	**C362_2.7 S4 ME4LB2**		134	**C362_2.7 P132 BE132MB2**		135
1098	76	3.2	2.7	2410	**C412_2.7 S4 ME4LB2**		138	**C412_2.7 P132 BE132MB2**		139

11 kW

n_2 min-1	M_2 Nm	S	i	R_{n2} N	IE2	IE3		IE2	IEC IE3	
7.4	12936	0.9	199.6	85000	**C1004_199.6 S5 ME5SA4**	**C1004_199.6 S5 MX5SB4**	159	**C1004_199.6 P160 BE160M4**	**C1004_199.6 P160 BX160MB4**	160
7.9	12012	1.0	185.4	85000	**C1004_185.4 S5 ME5SA4**	**C1004_185.4 S5 MX5SB4**	159	**C1004_185.4 P160 BE160M4**	**C1004_185.4 P160 BX160MB4**	160
9.1	10504	1.1	162.1	85000	**C1004_162.1 S5 ME5SA4**	**C1004_162.1 S5 MX5SB4**	159	**C1004_162.1 P160 BE160M4**	**C1004_162.1 P160 BX160MB4**	160
9.8	10073	1.2	150.4	85000	**C1003_150.4 S5 ME5SA4**	**C1003_150.4 S5 MX5SB4**	159	**C1003_150.4 P160 BE160M4**	**C1003_150.4 P160 BX160MB4**	160
10.5	9353	1.2	139.7	85000	**C1003_139.7 S5 ME5SA4**	**C1003_139.7 S5 MX5SB4**	159	**C1003_139.7 P160 BE160M4**	**C1003_139.7 P160 BX160MB4**	160
12.2	8070	1.5	120.5	85000	**C1003_120.5 S5 ME5SA4**	**C1003_120.5 S5 MX5SB4**	159	**C1003_120.5 P160 BE160M4**	**C1003_120.5 P160 BX160MB4**	160
12.6	7816	0.9	116.7	50800	**C903_116.7 S5 ME5SA4**	**C903_116.7 S5 MX5SB4**	156	**C903_116.7 P160 BE160M4**	**C903_116.7 P160 BX160MB4**	157
13.1	7493	1.6	111.9	85000	**C1003_111.9 S5 ME5SA4**	**C1003_111.9 S5 MX5SB4**	159	**C1003_111.9 P160 BE160M4**	**C1003_111.9 P160 BX160MB4**	160
13.7	7165	1.0	107.0	51000	**C903_107.0 S5 ME5SA4**	**C903_107.0 S5 MX5SB4**	156	**C903_107.0 P160 BE160M4**	**C903_107.0 P160 BX160MB4**	157
14.7	6683	1.8	99.8	85000	**C1003_99.8 S5 ME5SA4**	**C1003_99.8 S5 MX5SB4**	159	**C1003_99.8 P160 BE160M4**	**C1003_99.8 P160 BX160MB4**	160
15.3	6444	1.1	96.2	50800	**C903_96.2 S5 ME5SA4**	**C903_96.2 S5 MX5SB4**	156	**C903_96.2 P160 BE160M4**	**C903_96.2 P160 BX160MB4**	157
15.9	6205	1.9	92.7	85000	**C1003_92.7 S5 ME5SA4**	**C1003_92.7 S5 MX5SB4**	159	**C1003_92.7 P160 BE160M4**	**C1003_92.7 P160 BX160MB4**	160
16.7	5907	1.2	88.2	50700	**C903_88.2 S5 ME5SA4**	**C903_88.2 S5 MX5SB4**	156	**C903_88.2 P160 BE160M4**	**C903_88.2 P160 BX160MB4**	157
17.2	5729	2.1	85.6	85000	**C1003_85.6 S5 ME5SA4**	**C1003_85.6 S5 MX5SB4**	159	**C1003_85.6 P160 BE160M4**	**C1003_85.6 P160 BX160MB4**	160
18.1	5438	1.3	81.2	50700	**C903_81.2 S5 ME5SA4**	**C903_81.2 S5 MX5SB4**	156	**C903_81.2 P160 BE160M4**	**C903_81.2 P160 BX160MB4**	157
18.5	5320	2.3	79.4	85000	**C1003_79.4 S5 ME5SA4**	**C1003_79.4 S5 MX5SB4**	159	**C1003_79.4 P160 BE160M4**	**C1003_79.4 P160 BX160MB4**	160
19.7	4985	1.4	74.4	50200	**C903_74.4 S5 ME5SA4**	**C903_74.4 S5 MX5SB4**	156	**C903_74.4 P160 BE160M4**	**C903_74.4 P160 BX160MB4**	157
21.2	4649	2.6	69.4	84800	**C1003_69.4 S5 ME5SA4**	**C1003_69.4 S5 MX5SB4**	159	**C1003_69.4 P160 BE160M4**	**C1003_69.4 P160 BX160MB4**	160
22.8	4324	1.7	64.6	50000	**C903_64.6 S5 ME5SA4**	**C903_64.6 S5 MX5SB4**	156	**C903_64.6 P160 BE160M4**	**C903_64.6 P160 BX160MB4**	157
22.8	4317	2.8	64.5	83100	**C1003_64.5 S5 ME5SA4**	**C1003_64.5 S5 MX5SB4**	159	**C1003_64.5 P160 BE160M4**	**C1003_64.5 P160 BX160MB4**	160
23.5	4185	1.0	62.5	33000	**C803_62.5 S5 ME5SA4**	**C803_62.5 S5 MX5SB4**	153	**C803_62.5 P160 BE160M4**	**C803_62.5 P160 BX160MB4**	154
24.8	3964	1.8	59.2	49000	**C903_59.2 S5 ME5SA4**	**C903_59.2 S5 MX5SB4**	156	**C903_59.2 P160 BE160M4**	**C903_59.2 P160 BX160MB4**	157
25.7	3837	1.0	57.3	34200	**C803_57.3 S5 ME5SA4**	**C803_57.3 S5 MX5SB4**	153	**C803_57.3 P160 BE160M4**	**C803_57.3 P160 BX160MB4**	154
26.8	3674	2.0	54.9	48800	**C903_54.9 S5 ME5SA4**	**C903_54.9 S5 MX5SB4**	156	**C903_54.9 P160 BE160M4**	**C903_54.9 P160 BX160MB4**	157
29.2	3368	2.1	50.3	48000	**C903_50.3 S5 ME5SA4**	**C903_50.3 S5 MX5SB4**	156	**C903_50.3 P160 BE160M4**	**C903_50.3 P160 BX160MB4**	157
31	3177	1.2	47.4	33500	**C803_47.4 S5 ME5SA4**	**C803_47.4 S5 MX5SB4**	153	**C803_47.4 P160 BE160M4**	**C803_47.4 P160 BX160MB4**	154
34	2912	1.3	43.5	33100	**C803_43.5 S5 ME5SA4**	**C803_43.5 S5 MX5SB4**	153	**C803_43.5 P160 BE160M4**	**C803_43.5 P160 BX160MB4**	154
34	2878	2.5	43.0	47000	**C903_43.0 S5 ME5SA4**	**C903_43.0 S5 MX5SB4**	156	**C903_43.0 P160 BE160M4**	**C903_43.0 P160 BX160MB4**	157
37	2638	2.7	39.4	46100	**C903_39.4 S5 ME5SA4**	**C903_39.4 S5 MX5SB4**	156	**C903_39.4 P160 BE160M4**	**C903_39.4 P160 BX160MB4**	157
38	2675	1.2	39.1	30900	**C802_39.1 S5 ME5SA4**	**C802_39.1 S5 MX5SB4**	153	**C802_39.1 P160 BE160M4**	**C802_39.1 P160 BX160MB4**	154
42	2401	2.2	35.1	45000	**C902_35.1 S5 ME5SA4**	**C902_35.1 S5 MX5SB4**	156	**C902_35.1 P160 BE160M4**	**C902_35.1 P160 BX160MB4**	157
47	2143	1.7	31.3	30000	**C802_31.3 S5 ME5SA4**	**C802_31.3 S5 MX5SB4**	153	**C802_31.3 P160 BE160M4**	**C802_31.3 P160 BX160MB4**	154
50	2013	2.9	29.4	43400	**C902_29.4 S5 ME5SA4**	**C902_29.4 S5 MX5SB4**	156	**C902_29.4 P160 BE160M4**	**C902_29.4 P160 BX160MB4**	157
53	1896	1.1	27.7	17800	**C702_27.7 S5 ME5SA4**	**C702_27.7 S5 MX5SB4**	150	**C702_27.7 P160 BE160M4**	**C702_27.7 P160 BX160MB4**	151
54	1859	3.0	27.2	42700	**C902_27.2 S5 ME5SA4**	**C902_27.2 S5 MX5SB4**	156	**C902_27.2 P160 BE160M4**	**C902_27.2 P160 BX160MB4**	157
57	1775	2.1	25.9	29200	**C802_25.9 S5 ME5SA4**	**C802_25.9 S5 MX5SB4**	153	**C802_25.9 P160 BE160M4**	**C802_25.9 P160 BX160MB4**	154
61	1638	2.2	24.0	28700	**C802_24.0 S5 ME5SA4**	**C802_24.0 S5 MX5SB4**	153	**C802_24.0 P160 BE160M4**	**C802_24.0 P160 BX160MB4**	154
64	1563	1.3	22.9	17600	**C702_22.9 S5 ME5SA4**	**C702_22.9 S5 MX5SB4**	150	**C702_22.9 P160 BE160M4**	**C702_22.9 P160 BX160MB4**	151
66	1522	2.4	22.2	28400	**C802_22.2 S5 ME5SA4**	**C802_22.2 S5 MX5SB4**	153	**C802_22.2 P160 BE160M4**	**C802_22.2 P160 BX160MB4**	154
72	1404	2.5	20.5	28000	**C802_20.5 S5 ME5SA4**	**C802_20.5 S5 MX5SB4**	153	**C802_20.5 P160 BE160M4**	**C802_20.5 P160 BX160MB4**	154

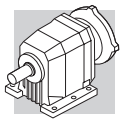

11 kW

n_2	M_2	S	i	R_{n2}	IE2	IE3		IE2	IEC IE3	
min-1	Nm			N						
75	1341	1.0	19.6	10800	**C612_19.6 S5 ME5SA4**	**C612_19.6 S5 MX5SB4**	146	**C612_19.6 P160 BE160M4**	**C612_19.6 P160 BX160MB4**	147
76	1319	1.6	19.3	17300	**C702_19.3 S5 ME5SA4**	**C702_19.3 S5 MX5SB4**	150	**C702_19.3 P160 BE160M4**	**C702_19.3 P160 BX160MB4**	151
81	1235	3.0	18.1	27300	**C802_18.1 S5 ME5SA4**	**C802_18.1 S5 MX5SB4**	153	**C802_18.1 P160 BE160M4**	**C802_18.1 P160 BX160MB4**	154
83	1207	1.1	17.7	10700	**C612_17.7 S5 ME5SA4**	**C612_17.7 S5 MX5SB4**	146	**C612_17.7 P160 BE160M4**	**C612_17.7 P160 BX160MB4**	147
88	1143	1.8	16.7	16800	**C702_16.7 S5 ME5SA4**	**C702_16.7 S5 MX5SB4**	150	**C702_16.7 P160 BE160M4**	**C702_16.7 P160 BX160MB4**	151
88	1140	3.1	16.7	26900	**C802_16.7 S5 ME5SA4**	**C802_16.7 S5 MX5SB4**	153	**C802_16.7 P160 BE160M4**	**C802_16.7 P160 BX160MB4**	154
92	1090	1.2	15.9	10700	**C612_15.9 S5 ME5SA4**	**C612_15.9 S5 MX5SB4**	146	**C612_15.9 P160 BE160M4**	**C612_15.9 P160 BX160MB4**	147
96	1049	2.0	15.3	16800	**C702_15.3 S5 ME5SA4**	**C702_15.3 S5 MX5SB4**	150	**C702_15.3 P160 BE160M4**	**C702_15.3 P160 BX160MB4**	151
102	981	1.4	14.3	10500	**C612_14.3 S5 ME5SA4**	**C612_14.3 S5 MX5SB4**	146	**C612_14.3 P160 BE160M4**	**C612_14.3 P160 BX160MB4**	147
104	964	2.2	14.1	16400	**C702_14.1 S5 ME5SA4**	**C702_14.1 S5 MX5SB4**	150	**C702_14.1 P160 BE160M4**	**C702_14.1 P160 BX160MB4**	151
113	891	2.4	13.0	16400	**C702_13.0 S5 ME5SA4**	**C702_13.0 S5 MX5SB4**	150	**C702_13.0 P160 BE160M4**	**C702_13.0 P160 BX160MB4**	151
122	827	1.6	12.1	10300	**C612_12.1 S5 ME5SA4**	**C612_12.1 S5 MX5SB4**	146	**C612_12.1 P160 BE160M4**	**C612_12.1 P160 BX160MB4**	147
124	810	1.0	11.8	6810	**C512_11.8 S5 ME5SA4**	**C512_11.8 S5 MX5SB4**	142	**C512_11.8 P160 BE160M4**	**C512_11.8 P160 BX160MB4**	143
131	767	2.8	11.2	15800	**C702_11.2 S5 ME5SA4**	**C702_11.2 S5 MX5SB4**	150	**C702_11.2 P160 BE160M4**	**C702_11.2 P160 BX160MB4**	151
135	745	1.8	10.9	10100	**C612_10.9 S5 ME5SA4**	**C612_10.9 S5 MX5SB4**	146	**C612_10.9 P160 BE160M4**	**C612_10.9 P160 BX160MB4**	147
144	698	3.0	10.2	15700	**C702_10.2 S5 ME5SA4**	**C702_10.2 S5 MX5SB4**	150	**C702_10.2 P160 BE160M4**	**C702_10.2 P160 BX160MB4**	151
150	672	2.0	9.8	9910	**C612_9.8 S5 ME5SA4**	**C612_9.8 S5 MX5SB4**	146	**C612_9.8 P160 BE160M4**	**C612_9.8 P160 BX160MB4**	147
151	667	1.0	9.8	6690	**C512_9.8 S5 ME5SA4**	**C512_9.8 S5 MX5SB4**	142	**C512_9.8 P160 BE160M4**	**C512_9.8 P160 BX160MB4**	143
154	651	3.3	9.5	15400	**C702_9.5 S5 ME5SA4**	**C702_9.5 S5 MX5SB4**	150	**C702_9.5 P160 BE160M4**	**C702_9.5 P160 BX160MB4**	151
166	605	2.2	8.8	9690	**C612_8.8 S5 ME5SA4**	**C612_8.8 S5 MX5SB4**	146	**C612_8.8 P160 BE160M4**	**C612_8.8 P160 BX160MB4**	147
167	601	1.1	8.8	6640	**C512_8.8 S5 ME5SA4**	**C512_8.8 S5 MX5SB4**	142	**C512_8.8 P160 BE160M4**	**C512_8.8 P160 BX160MB4**	143
190	530	1.2	7.8	6510	**C512_7.8 S5 ME5SA4**	**C512_7.8 S5 MX5SB4**	142	**C512_7.8 P160 BE160M4**	**C512_7.8 P160 BX160MB4**	143
196	512	2.6	7.5	9390	**C612_7.5 S5 ME5SA4**	**C612_7.5 S5 MX5SB4**	146	**C612_7.5 P160 BE160M4**	**C612_7.5 P160 BX160MB4**	147
210	478	1.3	7.0	6430	**C512_7.0 S5 ME5SA4**	**C512_7.0 S5 MX5SB4**	142	**C512_7.0 P160 BE160M4**	**C512_7.0 P160 BX160MB4**	143
218	461	2.9	6.7	9150	**C612_6.7 S5 ME5SA4**	**C612_6.7 S5 MX5SB4**	146	**C612_6.7 P160 BE160M4**	**C612_6.7 P160 BX160MB4**	147
245	411	1.6	6.0	8670	**C612_6.0 S5 ME5SA4**	**C612_6.0 S5 MX5SB4**	146	**C612_6.0 P160 BE160M4**	**C612_6.0 P160 BX160MB4**	147
261	385	1.1	5.6	5880	**C512_5.6 S5 ME5SA4**	**C512_5.6 S5 MX5SB4**	142	**C512_5.6 P160 BE160M4**	**C512_5.6 P160 BX160MB4**	143
323	312	2.1	4.6	8160	**C612_4.6 S5 ME5SA4**	**C612_4.6 S5 MX5SB4**	146	**C612_4.6 P160 BE160M4**	**C612_4.6 P160 BX160MB4**	147
330	305	1.4	4.5	5660	**C512_4.5 S5 ME5SA4**	**C512_4.5 S5 MX5SB4**	142	**C512_4.5 P160 BE160M4**	**C512_4.5 P160 BX160MB4**	143
397	253	2.6	3.7	7760	**C612_3.7 S5 ME5SA4**	**C612_3.7 S5 MX5SB4**	146	**C612_3.7 P160 BE160M4**	**C612_3.7 P160 BX160MB4**	147
444	226	1.9	3.3	5340	**C512_3.3 S5 ME5SA4**	**C512_3.3 S5 MX5SB4**	142	**C512_3.3 P160 BE160M4**	**C512_3.3 P160 BX160MB4**	143
521	193	3.4	2.8	7240	**C612_2.8 S5 ME5SA4**	**C612_2.8 S5 MX5SB4**	146	**C612_2.8 P160 BE160M4**	**C612_2.8 P160 BX160MB4**	147
522	191	2.3	5.6	5140	**C512_5.6 S5 ME5SA2**		142	**C512_5.6 P160 BE160MA2**		143
559	180	2.2	2.6	5080	**C512_2.6 S5 ME5SA4**	**C512_2.6 S5 MX5SB4**	142	**C512_2.6 P160 BE160M4**	**C512_2.6 P160 BX160MB4**	143
660	151	2.9	4.5	4870	**C512_4.5 S5 ME5SA2**		142	**C512_4.5 P160 BE160MA2**		143

15 kW

n_2	M_2	S	i	R_{n2}	IE2	IE3		IE2	IEC IE3	
min-1	Nm			N						
12.2	10984	1.1	120.5	83800	**C1003_120.5 S5 ME5LA4**	**C1003_120.5 S5 MX5LA4**	159	**C1003_120.5 P160 BE160L4**	**C1003_120.5 P160 BX160L4**	160
13.1	10199	1.2	111.9	83300	**C1003_111.9 S5 ME5LA4**	**C1003_111.9 S5 MX5LA4**	159	**C1003_111.9 P160 BE160L4**	**C1003_111.9 P160 BX160L4**	160
14.7	9096	1.3	99.8	82700	**C1003_99.8 S5 ME5LA4**	**C1003_99.8 S5 MX5LA4**	159	**C1003_99.8 P160 BE160L4**	**C1003_99.8 P160 BX160L4**	160
15.9	8446	1.4	92.7	82400	**C1003_92.7 S5 ME5LA4**	**C1003_92.7 S5 MX5LA4**	159	**C1003_92.7 P160 BE160L4**	**C1003_92.7 P160 BX160L4**	160
17.2	7798	1.5	85.6	81500	**C1003_85.6 S5 ME5LA4**	**C1003_85.6 S5 MX5LA4**	159	**C1003_85.6 P160 BE160L4**	**C1003_85.6 P160 BX160L4**	160
18.1	7402	1.0	81.2	44300	**C903_81.2 S5 ME5LA4**	**C903_81.2 S5 MX5LA4**	156	**C903_81.2 P160 BE160L4**	**C903_81.2 P160 BX160L4**	157
18.5	7241	1.7	79.4	81000	**C1003_79.4 S5 ME5LA4**	**C1003_79.4 S5 MX5LA4**	159	**C1003_79.4 P160 BE160L4**	**C1003_79.4 P160 BX160L4**	160
19.7	6785	1.0	74.4	44800	**C903_74.4 S5 ME5LA4**	**C903_74.4 S5 MX5LA4**	156	**C903_74.4 P160 BE160L4**	**C903_74.4 P160 BX160L4**	157
21.2	6328	1.9	69.4	79500	**C1003_69.4 S5 ME5LA4**	**C1003_69.4 S5 MX5LA4**	159	**C1003_69.4 P160 BE160L4**	**C1003_69.4 P160 BX160L4**	160
22.8	5886	1.2	64.6	44500	**C903_64.6 S5 ME5LA4**	**C903_64.6 S5 MX5LA4**	156	**C903_64.6 P160 BE160L4**	**C903_64.6 P160 BX160L4**	157
22.8	5876	2.0	64.5	78600	**C1003_64.5 S5 ME5LA4**	**C1003_64.5 S5 MX5LA4**	159	**C1003_64.5 P160 BE160L4**	**C1003_64.5 P160 BX160L4**	160
24.8	5396	1.3	59.2	44400	**C903_59.2 S5 ME5LA4**	**C903_59.2 S5 MX5LA4**	156	**C903_59.2 P160 BE160L4**	**C903_59.2 P160 BX160L4**	157
25.6	5227	2.3	57.4	77400	**C1003_57.4 S5 ME5LA4**	**C1003_57.4 S5 MX5LA4**	159	**C1003_57.4 P160 BE160L4**	**C1003_57.4 P160 BX160L4**	160
26.8	5001	1.4	54.9	44300	**C903_54.9 S5 ME5LA4**	**C903_54.9 S5 MX5LA4**	156	**C903_54.9 P160 BE160L4**	**C903_54.9 P160 BX160L4**	157
27.6	4854	2.5	53.3	76200	**C1003_53.3 S5 ME5LA4**	**C1003_53.3 S5 MX5LA4**	159	**C1003_53.3 P160 BE160L4**	**C1003_53.3 P160 BX160L4**	160
29.2	4584	1.5	50.3	44100	**C903_50.3 S5 ME5LA4**	**C903_50.3 S5 MX5LA4**	156	**C903_50.3 P160 BE160L4**	**C903_50.3 P160 BX160L4**	157

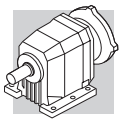

15 kW

n_2	M_2	S	i	R_{n2}	IE2	IE3		IE2	IEC IE3	
min-1	Nm			N						
32	4213	2.8	46.2	74500	**C1003_46.2 S5 ME5LA4**	**C1003_46.2 S5 MX5LA4**	159	**C1003_46.2 P160 BE160L4**	**C1003_46.2 P160 BX160L4**	160
34	3964	1.0	43.5	30300	**C803_43.5 S5 ME5LA4**	**C803_43.5 S5 MX5LA4**	153	**C803_43.5 P160 BE160L4**	**C803_43.5 P160 BX160L4**	154
34	3918	1.8	43.0	44100	**C903_43.0 S5 ME5LA4**	**C903_43.0 S5 MX5LA4**	156	**C903_43.0 P160 BE160L4**	**C903_43.0 P160 BX160L4**	157
37	3591	2.0	39.4	43000	**C903_39.4 S5 ME5LA4**	**C903_39.4 S5 MX5LA4**	156	**C903_39.4 P160 BE160L4**	**C903_39.4 P160 BX160L4**	157
38	3641	0.9	39.1	27300	**C802_39.1 S5 ME5LA4**	**C802_39.1 S5 MX5LA4**	153	**C802_39.1 P160 BE160L4**	**C802_39.1 P160 BX160L4**	154
42	3268	1.7	35.1	42200	**C902_35.1 S5 ME5LA4**	**C902_35.1 S5 MX5LA4**	156	**C902_35.1 P160 BE160L4**	**C902_35.1 P160 BX160L4**	157
47	2917	1.3	31.3	27500	**C802_31.3 S5 ME5LA4**	**C802_31.3 S5 MX5LA4**	153	**C802_31.3 P160 BE160L4**	**C802_31.3 P160 BX160L4**	154
50	2740	2.2	29.4	41100	**C902_29.4 S5 ME5LA4**	**C902_29.4 S5 MX5LA4**	156	**C902_29.4 P160 BE160L4**	**C902_29.4 P160 BX160L4**	157
54	2530	2.2	27.2	40700	**C902_27.2 S5 ME5LA4**	**C902_27.2 S5 MX5LA4**	156	**C902_27.2 P160 BE160L4**	**C902_27.2 P160 BX160L4**	157
57	2416	1.5	25.9	27100	**C802_25.9 S5 ME5LA4**	**C802_25.9 S5 MX5LA4**	153	**C802_25.9 P160 BE160L4**	**C802_25.9 P160 BX160L4**	154
59	2311	2.9	24.8	40000	**C902_24.8 S5 ME5LA4**	**C902_24.8 S5 MX5LA4**	156	**C902_24.8 P160 BE160L4**	**C902_24.8 P160 BX160L4**	157
61	2230	1.6	24.0	26900	**C802_24.0 S5 ME5LA4**	**C802_24.0 S5 MX5LA4**	153	**C802_24.0 P160 BE160L4**	**C802_24.0 P160 BX160L4**	154
64	2134	2.9	22.9	39500	**C902_22.9 S5 ME5LA4**	**C902_22.9 S5 MX5LA4**	156	**C902_22.9 P160 BE160L4**	**C902_22.9 P160 BX160L4**	157
64	2128	1.0	22.9	15400	**C702_22.9 S5 ME5LA4**	**C702_22.9 S5 MX5LA4**	150	**C702_22.9 P160 BE160L4**	**C702_22.9 P160 BX160L4**	151
66	2071	1.8	22.2	26600	**C802_22.2 S5 ME5LA4**	**C802_22.2 S5 MX5LA4**	153	**C802_22.2 P160 BE160L4**	**C802_22.2 P160 BX160L4**	154
72	1912	1.9	20.5	26200	**C802_20.5 S5 ME5LA4**	**C802_20.5 S5 MX5LA4**	153	**C802_20.5 P160 BE160L4**	**C802_20.5 P160 BX160L4**	154
73	1884	3.5	20.2	38500	**C902_20.2 S5 ME5LA4**	**C902_20.2 S5 MX5LA4**	156	**C902_20.2 P160 BE160L4**	**C902_20.2 P160 BX160L4**	157
76	1795	1.2	19.3	15600	**C702_19.3 S5 ME5LA4**	**C702_19.3 S5 MX5LA4**	150	**C702_19.3 P160 BE160L4**	**C702_19.3 P160 BX160L4**	151
81	1681	2.2	18.1	25800	**C802_18.1 S5 ME5LA4**	**C802_18.1 S5 MX5LA4**	153	**C802_18.1 P160 BE160L4**	**C802_18.1 P160 BX160L4**	154
88	1555	1.3	16.7	15400	**C702_16.7 S5 ME5LA4**	**C702_16.7 S5 MX5LA4**	150	**C702_16.7 P160 BE160L4**	**C702_16.7 P160 BX160L4**	151
88	1551	2.3	16.7	25500	**C802_16.7 S5 ME5LA4**	**C802_16.7 S5 MX5LA4**	153	**C802_16.7 P160 BE160L4**	**C802_16.7 P160 BX160L4**	154
92	1483	0.9	15.9	9350	**C612_15.9 S5 ME5LA4**	**C612_15.9 S5 MX5LA4**	146	**C612_15.9 P160 BE160L4**	**C612_15.9 P160 BX160L4**	147
96	1428	1.5	15.3	15400	**C702_15.3 S5 ME5LA4**	**C702_15.3 S5 MX5LA4**	150	**C702_15.3 P160 BE160L4**	**C702_15.3 P160 BX160L4**	151
99	1388	2.7	14.9	25000	**C802_14.9 S5 ME5LA4**	**C802_14.9 S5 MX5LA4**	153	**C802_14.9 P160 BE160L4**	**C802_14.9 P160 BX160L4**	154
102	1336	1.0	14.3	9280	**C612_14.3 S5 ME5LA4**	**C612_14.3 S5 MX5LA4**	146	**C612_14.3 P160 BE160L4**	**C612_14.3 P160 BX160L4**	147
104	1312	1.6	14.1	15300	**C702_14.1 S5 ME5LA4**	**C702_14.1 S5 MX5LA4**	150	**C702_14.1 P160 BE160L4**	**C702_14.1 P160 BX160L4**	151
107	1281	2.7	13.8	25000	**C802_13.8 S5 ME5LA4**	**C802_13.8 S5 MX5LA4**	153	**C802_13.8 P160 BE160L4**	**C802_13.8 P160 BX160L4**	154
113	1213	1.7	13.0	15200	**C702_13.0 S5 ME5LA4**	**C702_13.0 S5 MX5LA4**	150	**C702_13.0 P160 BE160L4**	**C702_13.0 P160 BX160L4**	151
122	1126	1.2	12.1	9270	**C612_12.1 S5 ME5LA4**	**C612_12.1 S5 MX5LA4**	146	**C612_12.1 P160 BE160L4**	**C612_12.1 P160 BX160L4**	147
131	1044	2.1	11.2	14700	**C702_11.2 S5 ME5LA4**	**C702_11.2 S5 MX5LA4**	150	**C702_11.2 P160 BE160L4**	**C702_11.2 P160 BX160L4**	151
135	1014	1.3	10.9	9140	**C612_10.9 S5 ME5LA4**	**C612_10.9 S5 MX5LA4**	146	**C612_10.9 P160 BE160L4**	**C612_10.9 P160 BX160L4**	147
144	950	2.2	10.2	14600	**C702_10.2 S5 ME5LA4**	**C702_10.2 S5 MX5LA4**	150	**C702_10.2 P160 BE160L4**	**C702_10.2 P160 BX160L4**	151
150	914	1.5	9.8	9090	**C612_9.8 S5 ME5LA4**	**C612_9.8 S5 MX5LA4**	146	**C612_9.8 P160 BE160L4**	**C612_9.8 P160 BX160L4**	147
154	887	2.4	9.5	14400	**C702_9.5 S5 ME5LA4**	**C702_9.5 S5 MX5LA4**	150	**C702_9.5 P160 BE160L4**	**C702_9.5 P160 BX160L4**	151
166	823	1.6	8.8	8930	**C612_8.8 S5 ME5LA4**	**C612_8.8 S5 MX5LA4**	146	**C612_8.8 P160 BE160L4**	**C612_8.8 P160 BX160L4**	147
184	745	2.8	8.0	14200				**C702_8.0 P160 BE160L4**	**C702_8.0 P160 BX160L4**	151
196	697	1.9	7.5	8760	**C612_7.5 S5 ME5LA4**	**C612_7.5 S5 MX5LA4**	146	**C612_7.5 P160 BE160L4**	**C612_7.5 P160 BX160L4**	147
197	695	3.0	7.5	14000	**C702_7.5 S5 ME5LA4**	**C702_7.5 S5 MX5LA4**	150	**C702_7.5 P160 BE160L4**	**C702_7.5 P160 BX160L4**	151
210	650	1.0	7.0	5800	**C512_7.0 S5 ME5LA4**	**C512_7.0 S5 MX5LA4**	142	**C512_7.0 P160 BE160L4**	**C512_7.0 P160 BX160L4**	143
218	628	2.2	6.7	8570	**C612_6.7 S5 ME5LA4**	**C612_6.7 S5 MX5LA4**	146	**C612_6.7 P160 BE160L4**	**C612_6.7 P160 BX160L4**	147
224	608	1.2	13.1	5760	**C512_13.1 S5 ME5SB2**		142	**C512_13.1 P160 BE160MB2**		143
243	560	2.4	12.1	8430	**C612_12.1 S5 ME5SB2**		146	**C612_12.1 P160 BE160MB2**		147
245	559	1.2	6.0	8130	**C612_6.0 S5 ME5LA4**	**C612_6.0 S5 MX5LA4**	146	**C612_6.0 P160 BE160L4**	**C612_6.0 P160 BX160L4**	147
248	548	1.4	11.8	5720	**C512_11.8 S5 ME5SB2**		142	**C512_11.8 P160 BE160MB2**		143
270	504	2.7	10.9	8230	**C612_10.9 S5 ME5SB2**		146	**C612_10.9 P160 BE160MB2**		147
299	454	3.0	9.8	8090	**C612_9.8 S5 ME5SB2**		146	**C612_9.8 P160 BE160MB2**		147
301	451	1.5	9.8	5570	**C512_9.8 S5 ME5SB2**		142	**C512_9.8 P160 BE160MB2**		143
323	424	1.6	4.6	7690	**C612_4.6 S5 ME5LA4**	**C612_4.6 S5 MX5LA4**	146	**C612_4.6 P160 BE160L4**	**C612_4.6 P160 BX160L4**	147
330	415	1.0	4.5	5250	**C512_4.5 S5 ME5LA4**	**C512_4.5 S5 MX5LA4**	142	**C512_4.5 P160 BE160L4**	**C512_4.5 P160 BX160L4**	143
333	409	3.3	8.8	7880	**C612_8.8 S5 ME5SB2**		146	**C612_8.8 P160 BE160MB2**		147
334	407	1.7	8.8	5490	**C512_8.8 S5 ME5SB2**		142	**C512_8.8 P160 BE160MB2**		143
379	359	1.8	7.8	5370	**C512_7.8 S5 ME5SB2**		142	**C512_7.8 P160 BE160MB2**		143
397	344	1.9	3.7	7370	**C612_3.7 S5 ME5LA4**	**C612_3.7 S5 MX5LA4**	146	**C612_3.7 P160 BE160L4**	**C612_3.7 P160 BX160L4**	147
421	323	1.9	7.0	5280	**C512_7.0 S5 ME5SB2**		142	**C512_7.0 P160 BE160MB2**		143
444	308	1.4	3.3	5080	**C512_3.3 S5 ME5LA4**	**C512_3.3 S5 MX5LA4**	142	**C512_3.3 P160 BE160L4**	**C512_3.3 P160 BX160L4**	143
490	278	2.4	6.0	7030	**C612_6.0 S5 ME5SB2**		146	**C612_6.0 P160 BE160MB2**		147
521	263	2.5	2.8	6940	**C612_2.8 S5 ME5LA4**	**C612_2.8 S5 MX5LA4**	146	**C612_2.8 P160 BE160L4**	**C612_2.8 P160 BX160L4**	147
522	261	1.7	5.6	4840	**C512_5.6 S5 ME5SB2**		142	**C512_5.6 P160 BE160MB2**		143
559	245	1.6	2.6	4940	**C512_2.6 S5 ME5LA4**	**C512_2.6 S5 MX5LA4**	142	**C512_2.6 P160 BE160L4**	**C512_2.6 P160 BX160L4**	143
645	211	3.2	4.6	6580	**C612_4.6 S5 ME5SB2**		146	**C612_4.6 P160 BE160MB2**		147
660	206	2.1	4.5	4630	**C512_4.5 S5 ME5SB2**		142	**C512_4.5 P160 BE160MB2**		143
889	153	2.7	3.3	4330	**C512_3.3 S5 ME5SB2**		142	**C512_3.3 P160 BE160MB2**		143
1118	122	3.3	2.6	4100	**C512_2.6 S5 ME5SB2**		142	**C512_2.6 P160 BE160MB2**		143

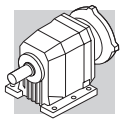

18.5 kW

n_2 min-1	M_2 Nm	S	i	R_{n2} N	IE2	IE3		IEC IE2	IEC IE3	
13.1	12489	1.0	111.9	76600				C1003_111.9 P180 BE180M4	C1003_111.9 P180 BX180M4	160
14.7	11138	1.1	99.8	76700				C1003_99.8 P180 BE180M4	C1003_99.8 P180 BX180M4	160
15.9	10342	1.2	92.7	76700				C1003_92.7 P180 BE180M4	C1003_92.7 P180 BX180M4	160
17.2	9548	1.3	85.6	76400				C1003_85.6 P180 BE180M4	C1003_85.6 P180 BX180M4	160
18.5	8866	1.4	79.4	76100				C1003_79.4 P180 BE180M4	C1003_79.4 P180 BX180M4	160
21.2	7748	1.5	69.4	75400				C1003_69.4 P180 BE180M4	C1003_69.4 P180 BX180M4	160
22.8	7207	1.0	64.6	40300				C903_64.6 P180 BE180M4	C903_64.6 P180 BX180M4	157
22.8	7195	1.7	64.5	74800				C1003_64.5 P180 BE180M4	C1003_64.5 P180 BX180M4	160
24.8	6607	1.1	59.2	40500				C903_59.2 P180 BE180M4	C903_59.2 P180 BX180M4	157
25.6	6400	1.9	57.4	73700				C1003_57.4 P180 BE180M4	C1003_57.4 P180 BX180M4	160
26.8	6124	1.2	54.9	40700				C903_54.9 P180 BE180M4	C903_54.9 P180 BX180M4	157
27.6	5943	2.0	53.3	73100				C1003_53.3 P180 BE180M4	C1003_53.3 P180 BX180M4	160
29.2	5614	1.3	50.3	40700				C903_50.3 P180 BE180M4	C903_50.3 P180 BX180M4	157
32	5159	2.3	46.2	71600				C1003_46.2 P180 BE180M4	C1003_46.2 P180 BX180M4	160
34	4797	1.5	43.0	40600				C903_43.0 P180 BE180M4	C903_43.0 P180 BX180M4	157
34	4790	2.5	42.9	70800				C1003_42.9 P180 BE180M4	C1003_42.9 P180 BX180M4	160
37	4397	1.6	39.4	40500				C903_39.4 P180 BE180M4	C903_39.4 P180 BX180M4	157
40	4122	2.9	36.9	69000				C1003_36.9 P180 BE180M4	C1003_36.9 P180 BX180M4	160
42	4001	1.3	35.1	39800				C902_35.1 P180 BE180M4	C902_35.1 P180 BX180M4	157
43	3828	3.1	34.3	68100				C1003_34.3 P180 BE180M4	C1003_34.3 P180 BX180M4	160
47	3572	1.0	31.3	25000				C802_31.3 P180 BE180M4	C802_31.3 P180 BX180M4	154
50	3298	2.8	29.6	65800				C1002_29.6 P180 BE180M4	C1002_29.6 P180 BX180M4	160
50	3356	1.8	29.4	39100				C902_29.4 P180 BE180M4	C902_29.4 P180 BX180M4	157
54	3098	1.8	27.2	38800				C902_27.2 P180 BE180M4	C902_27.2 P180 BX180M4	157
57	2958	1.3	25.9	25300				C802_25.9 P180 BE180M4	C802_25.9 P180 BX180M4	154
59	2830	2.3	24.8	38400				C902_24.8 P180 BE180M4	C902_24.8 P180 BX180M4	157
61	2731	1.3	24.0	25000				C802_24.0 P180 BE180M4	C802_24.0 P180 BX180M4	154
64	2613	2.4	22.9	37900				C902_22.9 P180 BE180M4	C902_22.9 P180 BX180M4	157
66	2536	1.5	22.2	25100				C802_22.2 P180 BE180M4	C802_22.2 P180 BX180M4	154
72	2341	1.5	20.5	24900				C802_20.5 P180 BE180M4	C802_20.5 P180 BX180M4	154
73	2307	2.9	20.2	37200				C902_20.2 P180 BE180M4	C902_20.2 P180 BX180M4	157
76	2198	1.0	19.3	14100				C702_19.3 P180 BE180M4	C702_19.3 P180 BX180M4	151
79	2130	2.9	18.7	36700				C902_18.7 P180 BE180M4	C902_18.7 P180 BX180M4	157
81	2058	1.8	18.1	24700				C802_18.1 P180 BE180M4	C802_18.1 P180 BX180M4	154
85	1973	3.3	17.3	36200				C902_17.3 P180 BE180M4	C902_17.3 P180 BX180M4	157
88	1904	1.1	16.7	13800				C702_16.7 P180 BE180M4	C702_16.7 P180 BX180M4	151
88	1900	1.8	16.7	24400				C802_16.7 P180 BE180M4	C802_16.7 P180 BX180M4	154
96	1748	1.2	15.3	13800				C702_15.3 P180 BE180M4	C702_15.3 P180 BX180M4	151
99	1700	2.2	14.9	24000				C802_14.9 P180 BE180M4	C802_14.9 P180 BX180M4	154
104	1607	1.3	14.1	13900				C702_14.1 P180 BE180M4	C702_14.1 P180 BX180M4	151
107	1569	2.2	13.8	23700				C802_13.8 P180 BE180M4	C802_13.8 P180 BX180M4	154
113	1485	1.4	13.0	13800				C702_13.0 P180 BE180M4	C702_13.0 P180 BX180M4	151
122	1378	1.0	12.1	8420				C612_12.1 P180 BE180M4	C612_12.1 P180 BX180M4	147
122	1370	2.7	12.0	23500				C802_12.0 P180 BE180M4	C802_12.0 P180 BX180M4	154
131	1278	1.7	11.2	13800				C702_11.2 P180 BE180M4	C702_11.2 P180 BX180M4	151
133	1265	2.8	11.1	22900				C802_11.1 P180 BE180M4	C802_11.1 P180 BX180M4	154
135	1241	1.1	10.9	8360				C612_10.9 P180 BE180M4	C612_10.9 P180 BX180M4	147
144	1164	1.8	10.2	13700				C702_10.2 P180 BE180M4	C702_10.2 P180 BX180M4	151
150	1119	1.2	9.8	8400				C612_9.8 P180 BE180M4	C612_9.8 P180 BX180M4	147
154	1086	2.0	9.5	13600				C702_9.5 P180 BE180M4	C702_9.5 P180 BX180M4	151
166	1008	1.3	8.8	8300				C612_8.8 P180 BE180M4	C612_8.8 P180 BX180M4	147
184	912	2.3	8.0	13500				C702_8.0 P180 BE180M4	C702_8.0 P180 BX180M4	151
196	853	1.6	7.5	8230				C612_7.5 P180 BE180M4	C612_7.5 P180 BX180M4	147
197	850	2.4	7.5	13400				C702_7.5 P180 BE180M4	C702_7.5 P180 BX180M4	151
218	768	1.8	6.7	8090				C612_6.7 P180 BE180M4	C612_6.7 P180 BX180M4	147
235	713	2.7	6.3	13300				C702_6.3 P180 BE180M4	C702_6.3 P180 BX180M4	151
245	684	1.0	6.0	7550				C612_6.0 P180 BE180M4	C612_6.0 P180 BX180M4	147

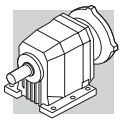

18.5 kW

n_2 min-1	M_2 Nm	S	i	R_{n2} N	IE2	IE3		IEC IE2	IEC IE3	
251	667	2.8	5.9	13200				**C702_5.9 P180 BE180M4**	**C702_5.9 P180 BX180M4**	151
270	621	2.2	10.9	7840	**C612_10.9 S5 ME5LA2**		146	**C612_10.9 P160 BE160L2**		147
300	560	2.4	9.8	7740	**C612_9.8 S5 ME5LA2**		146	**C612_9.8 P160 BE160L2**		147
302	556	1.2	9.8	5190	**C512_9.8 S5 ME5LA2**		142	**C512_9.8 P160 BE160L2**		143
322	521	3.3	4.6	13000				**C702_4.6 P180 BE180M4**	**C702_4.6 P180 BX180M4**	151
323	519	1.3	4.6	7300				**C612_4.6 P180 BE180M4**	**C612_4.6 P180 BX180M4**	147
333	504	2.7	8.8	7570	**C612_8.8 S5 ME5LA2**		146	**C612_8.8 P160 BE160L2**		147
335	501	1.4	8.8	5160	**C512_8.8 S5 ME5LA2**		142	**C512_8.8 P160 BE160L2**		143
380	442	1.4	7.8	5070	**C512_7.8 S5 ME5LA2**		142	**C512_7.8 P160 BE160L2**		143
393	427	3.2	7.5	7350	**C612_7.5 S5 ME5LA2**		146	**C612_7.5 P160 BE160L2**		147
397	422	1.6	3.7	7060				**C612_3.7 P180 BE180M4**	**C612_3.7 P180 BX180M4**	147
422	398	1.6	7.0	5010	**C512_7.0 S5 ME5LA2**		142	**C512_7.0 P160 BE160L2**		143
437	384	3.5	6.7	7170	**C612_6.7 S5 ME5LA2**		146	**C612_6.7 P160 BE160L2**		147
444	377	1.1	3.3	4750				**C512_3.3 P180 BE180M4**	**C512_3.3 P180 BX180M4**	143
491	342	1.9	6.0	6780	**C612_6 S5 ME5LA2**		146	**C612_6.0 P160 BE160L2**		147
521	321	2.1	2.8	6700				**C612_2.8 P180 BE180M4**		147
523	321	1.4	5.6	4580	**C512_5.6 S5 ME5LA2**		142	**C512_5.6 P160 BE160L2**		143
559	300	1.3	2.6	4600				**C512_2.6 P180 BE180M4**	**C512_2.6 P180 BX180M4**	143
646	260	2.6	4.6	6390	**C612_4.6 S5 ME5LA2**		146	**C612_4.6 P160 BE160L2**		147
661	254	1.7	4.5	4420	**C512_4.5 S5 ME5LA2**		142	**C512_4.5 P160 BE160L2**		143
796	211	3.2	3.7	6080	**C612_3.7 S5 ME5LA2**		146	**C612_3.7 P160 BE160L2**		147
890	188	2.2	3.3	4180	**C512_3.3 S5 ME5LA2**		142	**C512_3.3 P160 BE160L2**		143
1120	150	2.7	2.6	3980	**C512_2.6 S5 ME5LA2**		142	**C512_2.6 P160 BE160L2**		143

22 kW

n_2 min-1	M_2 Nm	S	i	R_{n2} N	IE2	IE3		IEC IE2	IEC IE3	
14.7	13273	0.9	99.8	70600				**C1003_99.8 P180 BE180L4**	**C1003_99.8 P180 BX180L4**	160
15.9	12325	1.0	92.7	70900				**C1003_92.7 P180 BE180L4**	**C1003_92.7 P180 BX180L4**	160
17.2	11378	1.1	85.6	71100				**C1003_85.6 P180 BE180L4**	**C1003_85.6 P180 BX180L4**	160
18.5	10565	1.1	79.4	71200				**C1003_79.4 P180 BE180L4**	**C1003_79.4 P180 BX180L4**	160
21.2	9233	1.3	69.4	71000				**C1003_69.4 P180 BE180L4**	**C1003_69.4 P180 BX180L4**	160
22.8	8574	1.4	64.5	70800				**C1003_64.5 P180 BE180L4**	**C1003_64.5 P180 BX180L4**	160
24.8	7873	0.9	59.2	36700				**C903_59.2 P180 BE180L4**	**C903_59.2 P180 BX180L4**	157
25.6	7627	1.6	57.4	70300				**C1003_57.4 P180 BE180L4**	**C1003_57.4 P180 BX180L4**	160
26.8	7298	1.0	54.9	36000				**C903_54.9 P180 BE180L4**	**C903_54.9 P180 BX180L4**	157
27.6	7082	1.7	53.3	69800				**C1003_53.3 P180 BE180L4**	**C1003_53.3 P18 0BX180L4**	160
29.2	6690	1.1	50.3	37400				**C903_50.3 P180 BE180L4**	**C903_50.3 P180 BX180L4**	157
32	6147	2.0	46.2	68800				**C1003_46.2 P180 BE180L4**	**C1003_46.2 P180 BX180L4**	160
34	5716	1.3	43.0	37500				**C903_43.0 P180 BE180L4**	**C903_43.0 P180 BX180L4**	157
34	5708	2.1	42.9	68100				**C1003_42.9 P180 BE180L4**	**C1003_42.9 P180 BX180L4**	160
37	5240	1.4	39.4	37500				**C903_39.4 P180 BE180L4**	**C903_39.4 P180 BX180L4**	157
40	4912	2.4	36.9	66700				**C1003_36.9 P180 BE180L4**	**C1003_36.9 P180 BX180L4**	160
42	4768	1.1	35.1	37400				**C902_35.1 P180 BE180L4**	**C902_35.1 P180 BX180L4**	157
43	4561	2.6	34.3	65900				**C1003_34.3 P180 BE180L4**	**C1003_34.3 P180 BX180L4**	160
50	3931	2.3	29.6	64100				**C1002_29.6 P180 BE180L4**	**C1002_29.6 P180 BX180L4**	160
50	3999	1.5	29.4	37100				**C902_29.4 P180 BE180L4**	**C902_29.4 P180 BX180L4**	157
54	3691	1.5	27.2	36900				**C902_27.2 P180 BE180L4**	**C902_27.2 P180 BX180L4**	157
57	3525	1.0	25.9	23000				**C802_25.9 P180 BE180L4**	**C802_25.9 P180 BX180L4**	154
59	3373	2.0	24.8	36600				**C902_24.8 P180 BE180L4**	**C902_24.8 P180 BX180L4**	157
61	3254	1.1	24.0	23700				**C802_24.0 P180 BE180L4**	**C802_24.0 P180 BX180L4**	154
64	3113	2.0	22.9	36400				**C902_22.9 P180 BE180L4**	**C902_22.9 P180 BX180L4**	157
66	3022	1.2	22.2	23500				**C802_22.2 P180 BE180L4**	**C802_22.2 P180 BX180L4**	154
72	2789	1.3	20.5	23400				**C802_20.5 P180 BE180L4**	**C802_20.5 P180 BX180L4**	154
73	2749	2.4	20.2	35800				**C902_20.2 P180 BE180L4**	**C902_20.2 P180 BX180L4**	157
79	2538	2.4	18.7	35400				**C902_18.7 P180 BE180L4**	**C902_18.7 P180 BX180L4**	157
81	2452	1.5	18.1	23300				**C802_18.1 P180 BE180L4**	**C802_18.1 P180 BX180L4**	154

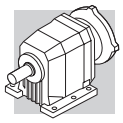

22 kW

n_2 min-1	M_2 Nm	S	i	R_{n2} N	IE2	IE3		IE2	IEC IE3	
85	2352	2.8	17.3	34900				**C902_17.3 P180 BE180L4**	**C902_17.3 P180 BX180L4**	157
88	2269	0.9	16.7	12400				**C702_16.7 P180 BE180L4**	**C702_16.7 P180 BX180L4**	151
88	2264	1.5	16.7	23100				**C802_16.7 P180 BE180L4**	**C802_16.7 P180 BX180L4**	154
92	2171	2.9	16.0	34600				**C902_16.0 P180 BE180L4**	**C902_16.0 P180 BX180L4**	157
96	2083	1.0	15.3	12400				**C702_15.3 P180 BE180L4**	**C702_15.3 P180 BX180L4**	151
99	2026	1.8	14.9	22900				**C802_14.9 P180 BE180L4**	**C802_14.9 P180 BX180L4**	154
104	1915	1.1	14.1	12700				**C702_14.1 P180 BE180L4**	**C702_14.1 P180 BX180L4**	151
106	1882	3.2	13.9	33700				**C902_13.9 P180 BE180L4**	**C902_13.9 P180 BX180L4**	157
107	1870	1.9	13.8	22700				**C802_13.8 P180 BE180L4**	**C802_13.8 P180 BX180L4**	154
113	1770	1.2	13.0	12700				**C702_13.0 P180 BE180L4**	**C702_13.0 P180 BX180L4**	151
122	1633	2.3	12.0	22500				**C802_12.0 P180 BE180L4**	**C802_12.0 P180 BX180L4**	154
131	1523	1.4	11.2	12900				**C702_11.2 P180 BE180L4**	**C702_11.2 P180 BX180L4**	151
133	1507	2.3	11.1	22100				**C802_11.1 P180 BE180L4**	**C802_11.1 P180 BX180L4**	154
135	1479	0.9	10.9	7580				**C612_10.9 P180 BE180L4**	**C612_10.9 P180 BX180L4**	147
144	1387	1.5	10.2	12800				**C702_10.2 P180 BE180L4**	**C702_10.2 P180 BX180L4**	151
150	1334	1.0	9.8	7710				**C612_9.8 P180 BE180L4**	**C612_9.8 P180 BX180L4**	147
153	1305	2.8	9.6	21900				**C802_9.6 P180 BE180L4**	**C802_9.6 P180 BX180L4**	154
154	1294	1.7	9.5	12800				**C702_9.5 P180 BE180L4**	**C702_9.5 P180 BX180L4**	151
166	1204	2.9	8.9	21300				**C802_8.9 P180 BE180L4**	**C802_8.9 P180 BX180L4**	154
166	1201	1.1	8.8	7660				**C612_8.8 P180 BE180L4**	**C612_8.8 P180 BX180L4**	147
184	1087	1.9	8.0	12700				**C702_8.0 P180 BE180L4**	**C702_8.0 P180 BX180L4**	151
196	1017	1.3	7.5	7690				**C612_7.5 P180 BE180L4**	**C612_7.5 P180 BX180L4**	147
197	1013	2.0	7.5	12700				**C702_7.5 P180 BE180L4**	**C702_7.5 P180 BX180L4**	151
218	916	1.5	6.7	7600				**C612_6.7 P180 BE180L4**	**C612_6.7 P180 BX180L4**	147
235	850	2.3	6.3	12500				**C702_6.3 P180 BE180L4**	**C702_6.3 P180 BX180L4**	151
251	795	2.4	5.9	12300				**C702_5.9 P180 BE180L4**	**C702_5.9 P180 BX180L4**	151
322	621	2.7	4.6	11900				**C702_4.6 P180 BE180L4**	**C702_4.6 P180 BX180L4**	151
323	619	1.1	4.6	6910				**C612_4.6 P180 BE180L4**	**C612_4.6 P180 BX180L4**	147
397	503	1.3	3.7	6740				**C612_3.7 P180 BE180L4**	**C612_3.7 P180 BX180L4**	147
444	449	0.9	3.3	4350				**C512_3.3 P180 BE180L4**	**C512_3.3 P180 BX180L4**	143
521	383	1.7	2.8	6450				**C612_2.8 P180 BE180L4**	**C612_2.8 P180 BX180L4**	147
559	357	1.1	2.6	4290				**C512_2.6 P180 BE180L4**	**C512_2.6 P180 BX180L4**	143

30 kW

n_2 min-1	M_2 Nm	S	i	R_{n2} N	IE...		IE2*	IEC IE3	
21.2	12584	1.0	69.4	61300			**C1003_69.4 P200 IEC200L4**	**C1003_69.4 P200 BX200LA4**	160
25.6	10395	1.2	57.4	62200			**C1003_57.4 P200 IEC200L4**	**C1003_57.4 P200 BX200LA4**	160
32	8379	1.4	46.2	62300			**C1003_46.2 P200 IEC200L4**	**C1003_46.2 P200 BX200LA4**	160
37	7142	1.0	39.4	31900			**C903_39.4 P200 IEC200L4**	**C903_39.4 P200 BX200LA4**	157
50	5472	1.7	29.6	59800			**C1002_29.6 P200 IEC200L4**	**C1002_29.6 P200 BX200LA4**	160
50	5450	1.1	29.4	32600			**C902_29.4 P200 IEC200L4**	**C902_29.4 P200 BX200LA4**	157
64	4243	1.5	22.9	32900			**C902_22.9 P200 IEC200L4**	**C902_22.9 P200 BX200LA4**	157
66	4119	2.4	22.2	57700			**C1002_22.2 P200 IEC200L4**	**C1002_22.2 P200 BX200LA4**	160
79	3459	1.8	18.7	32600			**C902_18.7 P200 IEC200L4**	**C902_18.7 P200 BX200LA4**	157
79	3456	3.1	18.7	56000			**C1002_18.7 P200 IEC200L4**	**C1002_18.7 P200 BX200LA4**	160
99	2761	1.3	14.9	20600			**C802_14.9 P200 IEC200L4**	**C802_14.9 P200 BX200LA4**	154
106	2566	2.4	13.9	31500			**C902_13.9 P200 IEC200L4**	**C902_13.9 P200 BX200LA4**	157
122	2225	1.7	12.0	20500			**C802_12.0 P200 IEC200L4**	**C802_12.0 P200 BX200LA4**	154
131	2079	2.7	11.2	30600			**C902_11.2 P200 IEC200L4**	**C902_11.2 P200 BX200LA4**	157
153	1778	2.1	9.6	20100			**C802_9.6 P200 IEC200L4**	**C802_9.6 P200 BX200LA4**	154
154	1763	1.2	9.5	11000			**C702_9.5 P200 IEC200L4**	**C702_9.5 P200 BX200LA4**	151
184	1482	1.4	8.0	11600			**C702_8.0 P200 IEC200L4**	**C702_8.0 P200 BX200LA4**	151
193	1412	2.4	7.6	19500			**C802_7.6 P200 IEC200L4**	**C802_7.6 P200 BX200LA4**	154
209	1303	2.6	7.0	19300			**C802_7.0 P200 IEC200L4**	**C802_7.0 P200 BX200LA4**	154
235	1158	1.7	6.3	11500			**C702_6.3 P200 IEC200L4**	**C702_6.3 P200 BX200LA4**	151
241	1131	2.8	6.1	18900			**C802_6.1 P200 IEC200L4**	**C802_6.1 P200 BX200LA4**	154
261	1044	3.0	5.6	18600			**C802_5.6 P200 IEC200L4**	**C802_5.6 P200 BX200LA4**	154
322	846	2.0	4.6	11000			**C702_4.6 P200 IEC200L4**	**C702_4.6 P200 BX200LA4**	151

***电机额定功率大于22KW时，技术资料仅供参考，选型时必参考电机制造商提供的信息。**

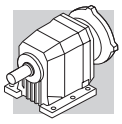

37 kW

n_2 min-1	M_2 Nm	S	i	R_{n2} N	IE...		IEC IE2*	IEC IE3	
25.8	12734	0.9	57.4	55300			C1003_57.4 P225 IEC225S4	C1003_57.4 P225 BX225SA4	160
32	10264	1.2	46.2	56600			C1003_46.2 P225 IEC225S4	C1003_46.2 P225 BX225SA4	160
40	8201	1.4	36.9	57000			C1003_36.9 P225 IEC225S4	C1003_36.9 P225 BX225SA4	160
60	5631	1.2	24.8	29500			C902_24.8 P225 IEC225S4	C902_24.8 P225 BX225SA4	157
61	5467	2.0	24.1	55200			C1002_24.1 P225 IEC225S4	C1002_24.1 P225 BX225SA4	160
79	4237	1.5	18.7	30100			C902_18.7 P225 IEC225S4	C902_18.7 P225 BX225SA4	157
79	4234	2.5	18.7	53600			C1002_18.7 P225 IEC225S4	C1002_18.7 P225 BX225SA4	160
89	3779	0.9	16.7	18500			C802_16.7 P225 IEC225S4	C802_16.7 P225 BX225SA4	154
107	3143	1.9	13.9	29700			C902_13.9 P225 IEC225S4	C902_13.9 P225 BX225SA4	157
108	3122	1.1	13.8	18800			C802_13.8 P225 IEC225S4	C802_13.8 P225 BX225SA4	154
123	2726	1.4	12.0	18800			C802_12.0 P225 IEC225S4	C802_12.0 P225 BX225SA4	154
132	2546	2.2	11.2	29100			C902_11.2 P225 IEC225S4	C902_11.2 P225 BX225SA4	157
154	2178	1.7	9.6	18800			C802_9.6 P225 IEC225S4	C802_9.6 P225 BX225SA4	154
164	2046	2.5	9.0	28300			C902_9.0 P225 IEC225S4	C902_9.0 P225 BX225SA4	157
194	1730	2.0	7.6	18500			C802_7.6 P225 IEC225S4	C802_7.6 P225 BX225SA4	154
202	1661	2.9	7.3	27400			C902_7.3 P225 IEC225S4	C902_7.3 P225 BX225SA4	157
242	1386	2.3	6.1	18000			C802_6.1 P225 IEC225S4	C802_6.1 P225 BX225SA4	154
264	1271	3.5	5.6	26100			C902_5.6 P225 IEC225S4	C902_5.6 P225 BX225SA4	157
286	1173	3.7	5.2	25700			C902_5.2 P225 IEC225S4	C902_5.2 P225 BX225SA4	157

45 kW

n_2 min-1	M_2 Nm	S	i	R_{n2} N	IE...		IEC IE2*	IEC IE3	
32	12483	1.0	46.2	50200			C1003_46.2 P225 IEC225M4	C1003_46.2 P225 BX225SB4	160
40	9974	1.2	36.9	51900			C1003_36.9 P225 IEC225M4	C1003_36.9 P225 BX225SB4	160
50	8153	1.1	29.6	51900			C1002_29.6 P225 IEC225M4	C1002_29.6 P225 BX225SB4	160
65	6322	1.0	22.9	26400			C902_22.9 P225 IEC225M4	C902_22.9 P225 BX225SB4	157
67	6137	1.6	22.2	51700			C1002_22.2 P225 IEC225M4	C1002_22.2 P225 BX225SB4	160
79	5153	1.2	18.7	27200			C902_18.7 P225 IEC225M4	C902_18.7 P225 BX225SB4	157
79	5149	2.1	18.7	51000			C1002_18.7 P225 IEC225M4	C1002_18.7 P225 BX225SB4	160
107	3822	1.6	13.9	27600			C902_13.9 P225 IEC225M4	C902_13.9 P225 BX225SB4	157
108	3797	0.9	13.8	16700			C802_13.8 P225 IEC225M4	C802_13.8 P225 BX225SB4	154
123	3315	1.1	12.0	17000			C802_12.0 P225 IEC225M4	C802_12.0 P225 BX225SB4	154
132	3097	1.8	11.2	27400			C902_11.2 P225 IEC225M4	C902_11.2 P225 BX225SB4	157
154	2649	1.4	9.6	17300			C802_9.6 P225 IEC225M4	C802_9.6 P225 BX225SB4	154
164	2488	2.1	9.0	26900			C902_9.0 P225 IEC225M4	C902_9.0 P225 BX225SB4	157
194	2104	1.6	7.6	17300			C802_7.6 P225 IEC225M4	C802_7.6 P225 BX225SB4	154
202	2020	2.4	7.3	26300			C902_7.3 P225 IEC225M4	C902_7.3 P225 BX225SB4	157
262	1556	2.0	5.6	17000			C802_5.6 P225 IEC225M4	C802_5.6 P225 BX225SB4	154
264	1546	2.8	5.6	25200			C902_5.6 P225 IEC225M4	C902_5.6 P225 BX225SB4	157
279	1464	2.9	5.2	25200			C902_5.2 P225 IEC225M4	C902_5.2 P225 BX225SB4	157

55 kW

n_2 min-1	M_2 Nm	S	i	R_{n2} N	IE...		IEC IE2*	IEC IE3	
40	12191	1.0	36.9	45400			C1003_36.9 P250 IEC250M4	C1003_36.9 P250 BX250MA4	160
50	9965	0.9	29.6	46700			C1002_29.6 P250 IEC250M4	C1002_29.6 P250 BX250MA4	160
61	8126	1.3	24.1	47500			C1002_24.1 P250 IEC250M4	C1002_24.1 P250 BX250MA4	160
79	6298	1.0	18.7	22200			C902_18.7 P250 IEC250M4	C902_18.7 P250 BX250MA4	157
79	6294	1.7	18.7	47700			C1002_18.7 P250 IEC250M4	C1002_18.7 P250 BX250MA4	160
107	4672	1.3	13.9	24900			C902_13.9 P250 IEC250M4	C902_13.9 P250 BX250MA4	157
110	4549	2.1	13.5	46500			C1002_13.5 P250 IEC250M4	C1002_13.5 P250 BX250MA4	160
135	3686	2.4	10.9	45400			C1002_10.9 P250 IEC250M4	C1002_10.9 P250 BX250MA4	160
164	3050	2.7	9.0	44100			C1002_9.0 P250 IEC250M4	C1002_9.0 P250 BX250MA4	160
164	3041	1.7	9.0	25200			C902_9.0 P250 IEC250M4	C902_9.0 P250 BX250MA4	157
202	2468	2.0	7.3	24900			C902_7.3 P250 IEC250M4	C902_7.3 P250 BX250MA4	157
209	2383	3.2	7.1	42300			C1002_7.1 P250 IEC250M4	C1002_7.1 P250 BX250MA4	160
264	1889	2.3	5.6	24200			C902_5.6 P250 IEC250M4	C902_5.6 P250 BX250MA4	157
286	1744	2.5	5.2	24000			C902_5.2 P250 IEC250M4	C902_5.2 P250 BX250MA4	157

***电机额定功率大于22KW时，技术资料仅供参考，选型时必参考电机制造商提供的信息。**

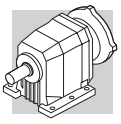

75 kW

n_2 min-1	M_2 Nm	S	i	R_{n2} N	IE...		IEC IE2*	IEC IE3	
62	11044	1.0	24.1	38100			**C1002_24.1 P280 IEC280S4**	**C1002_24.1 P280 BX280SA4**	163
67	10194	1.0	22.2	40000			**C1002_22.2 P280 IEC280S4**	**C1002_22.2 P280 BX280SA4**	163
73	9266	1.2	20.2	40500			**C1002_20.2 P280 IEC280S4**	**C1002_20.2 P280 BX280SA4**	163
80	8553	1.3	18.7	41100			**C1002_18.7 P280 IEC280S4**	**C1002_18.7 P280 BX280SA4**	163
90	7552	1.3	16.5	41400			**C1002_16.5 P280 IEC280S4**	**C1002_16.5 P280 BX280SA4**	163
98	6971	1.4	15.2	41800			**C1002_15.2 P280 IEC280S4**	**C1002_15.2 P280 BX280SA4**	163
110	6182	1.5	13.5	41700			**C1002_13.5 P280 IEC280S4**	**C1002_13.5 P280 BX280SA4**	163
119	5707	1.6	12.5	41800			**C1002_12.5 P280 IEC280S4**	**C1002_12.5 P280 BX280SA4**	163
136	5010	1.8	10.9	41500			**C1002_10.9 P280 IEC280S4**	**C1002_10.9 P280 BX280SA4**	163
147	4624	1.9	10.1	41400			**C1002_10.1 P280 IEC280S4**	**C1002_10.1 P280 BX280SA4**	163
164	4146	2.0	9.0	40900			**C1002_9.0 P280 IEC280S4**	**C1002_9.0 P280 BX280SA4**	163
178	3827	2.1	8.4	40600			**C1002_8.4 P280 IEC280S4**	**C1002_8.4 P280 BX280SA4**	163
210	3238	2.4	7.1	39700			**C1002_7.1 P280 IEC280S4**	**C1002_7.1 P280 BX280SA4**	163
228	2989	2.5	6.5	39300			**C1002_6.5 P280 IEC280S4**	**C1002_6.5 P280 BX280SA4**	163
278	2444	2.8	5.3	38100			**C1002_5.3 P280 IEC280S4**	**C1002_5.3 P280 BX280SA4**	163
302	2256	3.0	4.9	37600			**C1002_4.9 P280 IEC280S4**	**C1002_4.9 P280 BX280SA4**	163

90 kW

n_2 min-1	M_2 Nm	S	i	R_{n2} N	IE...		IEC IE2*	IEC IE3	
73	11119	1.0	20.2	30600			**C1002_20.2 P280 IEC280M4**	**C1002_20.2 P280 BX280SB4**	163
80	10264	1.0	18.7	35500			**C1002_18.7 P280 IEC280M4**	**C1002_18.7 P280 BX280SB4**	163
90	9062	1.1	16.5	37100			**C1002_16.5 P280 IEC280M4**	**C1002_16.5 P280 BX280SB4**	163
98	8365	1.2	15.2	37800			**C1002_15.2 P280 IEC280M4**	**C1002_15.2 P280 BX280SB4**	160
110	7419	1.3	13.5	38100			**C1002_13.5 P280 IEC280M4**	**C1002_13.5 P280 BX280SB4**	160
119	6848	1.4	12.5	38500			**C1002_12.5 P280 IEC280M4**	**C1002_12.5 P280 BX280SB4**	163
136	6012	1.5	10.9	38600			**C1002_10.9 P280 IEC280M4**	**C1002_10.9 P280 BX280SB4**	160
147	5549	1.6	10.1	38700			**C1002_10.1 P280 IEC280M4**	**C1002_10.1 P280 BX280SB4**	163
164	4975	1.7	9.0	38500			**C1002_9.0 P280 IEC280M4**	**C1002_9.0 P280 BX280SB4**	160
178	4592	1.8	8.4	38400			**C1002_8.4 P280 IEC280M4**	**C1002_8.4 P280 BX280SB4**	163
210	3886	2.0	7.1	37800			**C1002_7.1 P280 IEC280M4**	**C1002_7.1 P280 BX280SB4**	160
228	3587	2.1	6.5	37600			**C1002_6.5 P280 IEC280M4**	**C1002_6.5 P280 BX280SB4**	157
278	2933	2.4	5.3	36600			**C1002_5.3 P280 IEC280M4**	**C1002_5.3 P280 BX280SB4**	157
302	2707	2.5	4.9	36300			**C1002_4.9 P280 IEC280M4**	**C1002_4.9 P280 BX280SB4**	154

***电机额定功率大于22KW时，技术资料仅供参考，选型时必参考电机制造商提供的信息。**

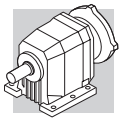

26 减速电机选型表

C 12 — 100 Nm

	i	n_1 = 2800 min^{-1}					n_1 = 1400 min^{-1}					
		n_2 min^{-1}	M_{n2} Nm	P_{n1} kW	R_{n1} N	R_{n2} N	n_2 min^{-1}	M_{n2} Nm	P_{n1} kW	R_{n1} N	R_{n2} N	
C 12 2_2.8	2.8	1012	30	3.3	750	600	506	37	2.1	990	790	
C 12 2_3.2	3.2	873	32	3.1	730	600	436	40	1.9	960	790	
C 12 2_3.7	3.7	767	34	2.9	720	610	383	42	1.8	960	800	
C 12 2_4.3	4.3	649	36	2.6	710	630	325	45	1.6	890	800	
C 12 2_4.9	4.9	575	38	2.4	710	640	288	48	1.5	880	800	
C 12 2_5.6	5.6	500	40	2.2	680	650	250	51	1.4	840	810	
C 12 2_6.2	6.2	449	42	2.1	650	660	225	53	1.3	810	830	
C 12 2_7.6	7.6	367	45	1.8	1140	1220	184	56	1.1	1300	1540	
C 12 2_8.8	8.8	317	47	1.6	1140	1280	158	59	1.0	1300	1620	
C 12 2_10.1	10.1	278	49	1.5	1150	1340	139	63	0.97	1300	1680	
C 12 2_11.9	11.9	236	53	1.4	1140	1390	118	67	0.87	1300	1760	
C 12 2_13.4	13.4	209	55	1.3	1140	1460	104	70	0.81	1300	1840	
C 12 2_15.4	15.4	182	58	1.2	1130	1500	91	73	0.73	1300	1930	125
C 12 2_17.2	17.2	163	60	1.1	1130	1590	82	76	0.68	1300	2000	
C 12 2_18.4	18.4	152	62	1.0	1120	1620	76	78	0.65	1300	2000	
C 12 2_20.6	20.6	136	65	1.0	1110	1670	68	82	0.61	1300	2000	
C 12 2_23.2	23.2	120	67	0.89	1110	1720	60	85	0.56	1300	2000	
C 12 2_25.4	25.4	110	69	0.84	1110	1800	55	88	0.54	1300	2000	
C 12 2_29.5	29.5	95	74	0.77	1100	1880	47	93	0.49	1300	2000	
C 12 2_32.8	32.8	85	75	0.71	1090	1970	43	90	0.42	1300	2000	
C 12 2_37.0	37.0	76	79	0.66	1070	2000	38	90	0.38	1300	2000	
C 12 2_42.3	42.3	66	84	0.61	1060	2000	33	100	0.36	1300	2000	
C 12 2_47.6	47.6	59	85	0.55	1050	2000	29.4	90	0.29	1300	2000	
C 12 2_55.2	55.2	51	89	0.50	1030	2000	25.4	90	0.25	1300	2000	
C 12 2_66.2	66.2	42	86	0.40	1060	2000	21.2	90	0.21	1300	2000	

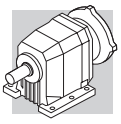

C 12 — 100 Nm

	i	n_1 = 900 min^{-1}					n_1 = 500 min^{-1}					
		n_2 min^{-1}	M_{n2} Nm	P_{n1} kW	R_{n1} N	R_{n2} N	n_2 min^{-1}	M_{n2} Nm	P_{n1} kW	R_{n1} N	R_{n2} N	
C 12 2_2.8	2.8	325	43	1.5	1140	910	181	53	1.1	1300	1080	
C 12 2_3.2	3.2	281	46	1.4	1100	910	156	57	1.0	1300	1080	
C 12 2_3.7	3.7	246	49	1.3	1090	920	137	60	0.91	1300	1100	
C 12 2_4.3	4.3	209	52	1.2	1050	920	116	64	0.82	1280	1100	
C 12 2_4.9	4.9	185	55	1.1	1050	960	103	67	0.76	1280	1160	
C 12 2_5.6	5.6	161	58	1.0	1000	980	89	69	0.68	1300	1280	
C 12 2_6.2	6.2	144	61	1.0	960	980	80	70	0.62	1300	1390	
C 12 2_7.6	7.6	118	65	0.85	1300	1780	66	79	0.57	1300	2000	
C 12 2_8.8	8.8	102	69	0.77	1300	1830	57	84	0.52	1300	2000	
C 12 2_10.1	10.1	89	72	0.71	1300	1950	50	88	0.48	1300	2000	
C 12 2_11.9	11.9	76	77	0.64	1300	2000	42	89	0.41	1300	2000	
C 12 2_13.4	13.4	67	81	0.60	1300	2000	37	90	0.37	1300	2000	
C 12 2_15.4	15.4	58	85	0.55	1300	2000	32	89	0.32	1300	2000	125
C 12 2_17.2	17.2	52	88	0.51	1300	2000	29.1	90	0.29	1300	2000	
C 12 2_18.4	18.4	49	88	0.47	1300	2000	27.2	89	0.27	1300	2000	
C 12 2_20.6	20.6	44	89	0.43	1300	2000	24.2	89	0.24	1300	2000	
C 12 2_23.2	23.2	39	89	0.38	1300	2000	21.5	89	0.21	1300	2000	
C 12 2_25.4	25.4	35	89	0.35	1300	2000	19.7	89	0.19	1300	2000	
C 12 2_29.5	29.5	31	100	0.34	1300	2000	16.9	100	0.19	1300	2000	
C 12 2_32.8	32.8	27.5	90	0.27	1300	2000	15.3	90	0.15	1300	2000	
C 12 2_37.0	37.0	24.3	90	0.24	1300	2000	13.5	90	0.13	1300	2000	
C 12 2_42.3	42.3	21.3	100	0.23	1300	2000	11.8	100	0.13	1300	2000	
C 12 2_47.6	47.6	18.9	90	0.19	1300	2000	10.5	90	0.10	1300	2000	
C 12 2_55.2	55.2	16.3	90	0.16	1300	2000	9.1	90	0.09	1300	2000	
C 12 2_66.2	66.2	13.6	90	0.13	1300	2000	7.6	90	0.07	1300	2000	

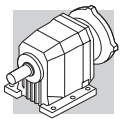

C 22 — 200 Nm

	i	n_1 = 2800 min^{-1}					n_1 = 1400 min^{-1}					
		n_2 min^{-1}	M_{n2} Nm	P_{n1} kW	R_{n1} N	R_{n2} N	n_2 min^{-1}	M_{n2} Nm	P_{n1} kW	R_{n1} N	R_{n2} N	
C 22 2_2.7	2.7	1029	65	7.4	—	1150	514	80	4.5	—	1460	
C 22 2_3.3	3.3	842	68	6.3	—	1230	421	85	3.9	—	1560	
C 22 2_3.7	3.7	755	70	5.8	—	1290	378	90	3.7	—	1610	
C 22 2_4.3	4.3	658	75	5.4	—	1320	329	94	3.4	—	1650	
C 22 2_4.8	4.8	587	80	5.2	—	1370	294	100	3.2	—	1730	
C 22 2_5.6	5.6	501	82	4.5	—	1410	250	102	2.8	—	1790	
C 22 2_6.1	6.1	460	85	4.3	—	1500	230	105	2.7	—	1900	
C 22 2_7.1	7.1	395	105	4.6	1090	1570	198	130	2.8	1420	1990	
C 22 2_8.7	8.7	324	110	3.9	1130	1680	162	138	2.5	1430	2090	
C 22 2_9.6	9.6	290	115	3.7	1160	1750	145	145	2.3	1460	2200	
C 22 2_11.1	11.1	253	120	3.3	1130	1820	126	153	2.1	1390	2270	
C 22 2_12.4	12.4	226	125	3.1	1160	1900	113	160	2.0	1420	2380	
C 22 2_14.5	14.5	193	133	2.8	1090	1980	96	168	1.8	1360	2450	
C 22 2_15.8	15.8	177	140	2.7	1030	2030	88	175	1.7	1320	2570	
C 22 2_18.1	18.1	154	145	2.5	1000	2140	77	183	1.6	1250	2650	
C 22 2_20.0	20.0	140	150	2.3	1000	2210	70	190	1.5	1250	2770	
C 22 2_21.5	21.5	131	153	2.2	970	2250	65	194	1.4	1190	2820	
C 22 2_24.3	24.3	115	160	2.0	980	2350	58	200	1.3	1250	2970	
C 22 2_27.2	27.2	103	166	1.9	960	2420	52	200	1.1	1340	3110	
C 22 2_29.6	29.6	95	175	1.8	850	2490	47	200	1.0	1350	3270	
C 22 2_33.1	33.1	85	178	1.7	840	2590	42	200	0.93	1390	3400	129
C 22 2_36.8	36.8	76	185	1.6	750	2690	38	200	0.84	1400	3610	
C 22 2_43.3	43.3	65	185	1.3	830	2910	32	190	0.68	1610	3950	
C 22 2_48.6	48.6	58	150	0.95	1300	3300	28.8	155	0.49	1740	4400	
C 22 2_54.7	54.7	51	150	0.85	1320	3470	25.6	155	0.44	1770	4600	
C 22 2_63.3	63.3	44	125	0.61	1400	3860	22.1	130	0.32	1820	5000	
C 22 3_60.0	60.0	47	180	0.93	840	3400	23.3	190	0.49	1230	4500	
C 22 3_65.3	65.3	43	200	0.94	880	3440	21.4	200	0.47	1270	4670	
C 22 3_74.8	74.8	37	200	0.83	940	3600	18.7	200	0.41	1270	4800	
C 22 3_82.6	82.6	34	200	0.75	1010	3820	16.9	200	0.37	1300	5000	
C 22 3_88.5	88.5	32	200	0.70	1040	3900	15.8	200	0.35	1300	5000	
C 22 3_100.2	100.2	28.0	200	0.62	1090	4160	14.0	200	0.31	1300	5000	
C 22 3_112.0	112.0	25.0	200	0.55	1130	4300	12.5	200	0.28	1300	5000	
C 22 3_122.2	122.2	22.9	200	0.51	1160	4540	11.5	200	0.25	1300	5000	
C 22 3_136.5	136.5	20.5	200	0.45	1180	4700	10.3	200	0.23	1300	5000	
C 22 3_151.7	151.7	18.5	200	0.41	1220	4980	9.2	200	0.20	1300	5000	
C 22 3_178.5	178.5	15.7	200	0.35	1260	5000	7.8	200	0.17	1300	5000	
C 22 3_200.7	200.7	14.0	190	0.29	1280	5000	7.0	190	0.15	1300	5000	
C 22 3_225.8	225.8	12.4	180	0.25	1300	5000	6.2	185	0.13	1300	5000	
C 22 3_261.0	261.0	10.7	145	0.17	1300	5000	5.4	155	0.09	1300	5000	

(—) 请联系我们的技术部门并告知径向负载信息 (转向, 力的方向, 位置)

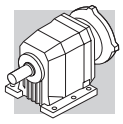

C 22 — 200 Nm

	i	n_1 = 900 min^{-1}					n_1 = 500 min^{-1}					
		n_2 min^{-1}	M_{n2} Nm	P_{n1} kW	R_{n1} N	R_{n2} N	n_2 min^{-1}	M_{n2} Nm	P_{n1} kW	R_{n1} N	R_{n2} N	
C 22 2_2.7	2.7	331	95	3.5	—	1670	184	100	2.0	400	2150	
C 22 2_3.3	3.3	271	100	3.0	—	1760	150	103	1.7	570	2300	
C 22 2_3.7	3.7	243	105	2.8	—	1850	135	105	1.6	800	2430	
C 22 2_4.3	4.3	211	105	2.4	—	1980	117	105	1.4	940	2550	
C 22 2_4.8	4.8	189	105	2.2	170	2090	105	105	1.2	1200	2710	
C 22 2_5.6	5.6	161	105	1.9	200	2250	89	112	1.1	1020	2850	
C 22 2_6.1	6.1	148	110	1.8	200	2290	82	116	1.1	980	2930	
C 22 2_7.1	7.1	127	150	2.1	1650	2310	71	180	1.4	2060	2820	
C 22 2_8.7	8.7	104	160	1.8	1650	2440	58	190	1.2	2100	3000	
C 22 2_9.6	9.6	93	170	1.7	1650	2530	52	200	1.1	2130	3130	
C 22 2_11.1	11.1	81	176	1.6	1640	2650	45	200	0.99	2170	3270	
C 22 2_12.4	12.4	73	185	1.5	1650	2760	40	200	0.89	2200	3520	
C 22 2_14.5	14.5	62	193	1.3	1610	2850	34	200	0.76	2200	3670	
C 22 2_15.8	15.8	57	200	1.3	1580	2990	32	200	0.70	2200	3920	
C 22 2_18.1	18.1	50	200	1.1	1650	3150	27.6	200	0.61	2200	4200	
C 22 2_20.0	20.0	45	200	0.99	1750	3340	25.0	200	0.55	2200	4350	
C 22 2_21.5	21.5	42	200	0.92	1760	3450	23.3	200	0.51	2200	4550	
C 22 2_24.3	24.3	37	200	0.82	1900	3650	20.6	200	0.45	2200	4720	
C 22 2_27.2	27.2	33	200	0.73	1950	3820	18.4	200	0.41	2200	5000	
C 22 2_29.6	29.6	30	200	0.67	1980	3990	16.9	200	0.37	2200	5000	
C 22 2_33.1	33.1	27.2	200	0.60	1970	4200	15.1	200	0.33	2200	5000	129
C 22 2_36.8	36.8	24.5	200	0.54	1990	4390	13.6	200	0.30	2200	5000	
C 22 2_43.3	43.3	20.8	190	0.44	2020	4770	11.6	190	0.24	2200	5000	
C 22 2_48.6	48.6	18.5	160	0.33	2050	5000	10.3	170	0.19	2200	5000	
C 22 2_54.7	54.7	16.4	160	0.29	2090	5000	9.1	170	0.17	2200	5000	
C 22 2_63.3	63.3	14.2	135	0.21	2140	5000	7.9	140	0.12	2200	5000	
C 22 3_60.0	60.0	15.0	190	0.31	1300	5000	8.3	200	0.18	1300	5000	
C 22 3_65.3	65.3	13.8	200	0.31	1300	5000	7.7	200	0.17	1300	5000	
C 22 3_74.8	74.8	12.0	200	0.27	1300	5000	6.7	200	0.15	1300	5000	
C 22 3_82.6	82.6	10.9	200	0.25	1300	5000	6.1	200	0.14	1300	5000	
C 22 3_88.5	88.5	10.2	200	0.22	1300	5000	5.6	200	0.12	1300	5000	
C 22 3_100.2	100.2	9.0	200	0.20	1300	5000	5.0	200	0.11	1300	5000	
C 22 3_112.0	112.0	8.0	200	0.18	1300	5000	4.5	200	0.10	1300	5000	
C 22 3_122.2	122.2	7.4	200	0.17	1300	5000	4.1	200	0.09	1300	5000	
C 22 3_136.5	136.5	6.6	200	0.15	1300	5000	3.7	200	0.08	1300	5000	
C 22 3_151.7	151.7	5.9	200	0.13	1300	5000	3.3	200	0.07	1300	5000	
C 22 3_178.5	178.5	5.0	200	0.11	1300	5000	2.8	200	0.06	1300	5000	
C 22 3_200.7	200.7	4.5	195	0.10	1300	5000	2.5	200	0.05	1300	5000	
C 22 3_225.8	225.8	4.0	195	0.09	1300	5000	2.2	200	0.05	1300	5000	
C 22 3_261.0	261.0	3.4	160	0.06	1300	5000	1.9	165	0.04	1300	5000	

(—) 请联系我们的技术部门并告知径向负载信息 (转向, 力的方向, 位置)

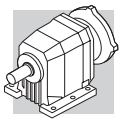

C 32 — 300 Nm

	i	n_1 = 2800 min^{-1}					n_1 = 1400 min^{-1}					
		n_2 min^{-1}	M_{n2} Nm	P_{n1} kW	R_{n1} N	R_{n2} N	n_2 min^{-1}	M_{n2} Nm	P_{n1} kW	R_{n1} N	R_{n2} N	
C 32 2_2.9	2.9	973	105	11.3	670	1710	486	130	7.0	940	2170	
C 32 2_3.4	3.4	821	116	10.5	480	1770	411	138	6.2	900	2280	
C 32 2_3.7	3.7	750	120	9.9	560	1830	375	150	6.2	750	2310	
C 32 2_4.5	4.5	622	129	8.8	450	1930	311	152	5.2	970	2500	
C 32 2_5.0	5.0	565	135	8.4	470	1990	283	155	4.8	1100	2600	
C 32 2_5.7	5.7	495	141	7.7	380	2080	248	155	4.2	1250	2760	
C 32 2_6.3	6.3	447	150	7.4	300	2130	223	155	3.8	1450	2890	
C 32 2_7.2	7.2	391	160	6.9	1890	2370	195	200	4.3	2200	2990	
C 32 2_8.5	8.5	330	168	6.1	1900	2510	165	209	3.8	2200	3180	
C 32 2_9.3	9.3	301	175	5.8	1910	2580	151	220	3.7	2200	3260	
C 32 2_11.2	11.2	250	187	5.2	1910	2740	125	231	3.2	2200	3480	
C 32 2_12.3	12.3	227	195	4.9	1910	2820	114	245	3.1	2200	3560	
C 32 2_14.1	14.1	199	205	4.5	1900	2940	99	251	2.8	2200	3750	
C 32 2_15.6	15.6	180	215	4.3	1900	3030	90	270	2.7	2200	3820	
C 32 2_18.2	18.2	154	223	3.8	1900	3210	77	275	2.3	2200	4070	
C 32 2_20.1	20.1	139	235	3.6	1900	3290	70	295	2.3	2200	4160	
C 32 2_22.9	22.9	122	240	3.2	1880	3470	61	295	2.0	2200	4400	
C 32 2_25.1	25.1	111	250	3.1	1890	3560	56	300	1.8	2200	4570	
C 32 2_26.9	26.9	104	255	2.9	1880	3650	52	300	1.7	2200	4700	
C 32 2_29.8	29.8	94	265	2.7	1880	3770	47	300	1.6	2200	4920	
C 32 2_33.1	33.1	85	270	2.5	1880	3920	42	300	1.4	2200	5150	133
C 32 2_36.1	36.1	78	280	2.4	1870	4030	39	300	1.3	2200	5350	
C 32 2_40.7	40.7	69	290	2.2	1860	4200	34	300	1.1	2200	5500	
C 32 2_45.3	45.3	62	300	2.0	1860	4360	31	300	1.0	2200	5500	
C 32 2_52.4	52.4	53	300	1.8	1860	4650	26.7	300	0.88	2200	5500	
C 32 2_59.4	59.4	47	205	1.1	2020	5000	23.6	215	0.56	2200	5500	
C 32 2_66.8	66.8	42	205	0.95	2020	5500	21.0	215	0.50	2200	5500	
C 32 3_74.7	74.7	37	280	1.2	750	5500	18.7	290	0.60	1170	5500	
C 32 3_82.6	82.6	34	300	1.1	820	5500	17.0	300	0.56	1240	5500	
C 32 3_94.2	94.2	29.7	300	0.98	900	5500	14.9	300	0.49	1270	5500	
C 32 3_103.3	103.3	27.1	300	0.90	980	5500	13.6	300	0.45	1300	5500	
C 32 3_110.6	110.6	25.3	300	0.84	1000	5500	12.7	300	0.42	1300	5500	
C 32 3_122.4	122.4	22.9	300	0.76	1060	5500	11.4	300	0.38	1300	5500	
C 32 3_136.0	136.0	20.6	300	0.68	1110	5500	10.3	300	0.34	1300	5500	
C 32 3_148.4	148.4	18.9	300	0.62	1130	5500	9.4	300	0.31	1300	5500	
C 32 3_167.4	167.4	16.7	300	0.55	1180	5500	8.4	300	0.28	1300	5500	
C 32 3_186.0	186.0	15.1	300	0.50	1200	5500	7.5	300	0.25	1300	5500	
C 32 3_215.6	215.6	13.0	300	0.43	1240	5500	6.5	300	0.21	1300	5500	
C 32 3_244.2	244.2	11.5	240	0.30	1280	5500	5.7	255	0.16	1300	5500	
C 32 3_274.7	274.7	10.2	240	0.27	1300	5500	5.1	255	0.14	1300	5500	

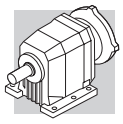

C 32 — 300 Nm

	i	n_1 = 900 min^{-1}					n_1 = 500 min^{-1}					
		n_2 min^{-1}	M_{n2} Nm	P_{n1} kW	R_{n1} N	R_{n2} N	n_2 min^{-1}	M_{n2} Nm	P_{n1} kW	R_{n1} N	R_{n2} N	
C 32 2_2.9	2.9	313	150	5.2	1120	2510	174	155	3.0	2200	3220	
C 32 2_3.4	3.4	264	152	4.4	1390	2690	147	167	2.7	2200	3390	
C 32 2_3.7	3.7	241	155	4.1	1570	2790	134	175	2.6	2200	3480	
C 32 2_4.5	4.5	200	158	3.5	1750	3010	111	188	2.3	2200	3690	
C 32 2_5.0	5.0	182	162	3.2	1870	3120	101	198	2.2	2200	3790	
C 32 2_5.7	5.7	159	171	3.0	1730	3250	88	198	1.9	2200	4010	
C 32 2_6.3	6.3	144	178	2.8	1730	3350	80	200	1.8	2200	4180	
C 32 2_7.2	7.2	126	235	3.3	2200	3450	70	285	2.2	2200	4200	
C 32 2_8.5	8.5	106	246	2.9	2200	3660	59	288	1.9	2200	4520	
C 32 2_9.3	9.3	97	260	2.8	2200	3750	54	300	1.8	2200	4640	
C 32 2_11.2	11.2	80	272	2.4	2200	4010	45	300	1.5	2200	5030	
C 32 2_12.3	12.3	73	285	2.3	2200	4120	41	300	1.3	2200	5250	
C 32 2_14.1	14.1	64	290	2.0	2200	4340	36	300	1.2	2200	5500	
C 32 2_15.6	15.6	58	300	1.9	2200	4500	32	300	1.1	2200	5500	
C 32 2_18.2	18.2	50	300	1.6	2200	4810	27.5	300	0.91	2200	5500	
C 32 2_20.1	20.1	45	300	1.5	2200	5030	24.9	300	0.82	2200	5500	
C 32 2_22.9	22.9	39	300	1.3	2200	5300	21.8	300	0.72	2200	5500	
C 32 2_25.1	25.1	36	300	1.2	2200	5500	19.9	300	0.66	2200	5500	
C 32 2_26.9	26.9	33	300	1.1	2200	5500	18.6	300	0.61	2200	5500	
C 32 2_29.8	29.8	30	300	1.0	2200	5500	16.8	300	0.56	2200	5500	
C 32 2_33.1	33.1	27.2	300	0.90	2200	5500	15.1	300	0.50	2200	5500	133
C 32 2_36.1	36.1	24.9	300	0.82	2200	5500	13.9	300	0.46	2200	5500	
C 32 2_40.7	40.7	22.1	300	0.73	2200	5500	12.3	300	0.41	2200	5500	
C 32 2_45.3	45.3	19.9	300	0.66	2200	5500	11.0	300	0.37	2200	5500	
C 32 2_52.4	52.4	17.2	300	0.57	2200	5500	9.5	300	0.32	2200	5500	
C 32 2_59.4	59.4	15.2	220	0.37	2200	5500	8.4	230	0.21	2200	5500	
C 32 2_66.8	66.8	13.5	220	0.33	2200	5500	7.5	230	0.19	2200	5500	
C 32 3_74.7	74.7	12.0	290	0.38	1300	5500	6.7	300	0.22	1300	5500	
C 32 3_82.6	82.6	10.9	300	0.36	1300	5500	6.1	300	0.20	1300	5500	
C 32 3_94.2	94.2	9.6	300	0.32	1300	5500	5.3	300	0.18	1300	5500	
C 32 3_103.3	103.3	8.7	300	0.29	1300	5500	4.8	300	0.16	1300	5500	
C 32 3_110.6	110.6	8.1	300	0.27	1300	5500	4.5	300	0.15	1300	5500	
C 32 3_122.4	122.4	7.4	300	0.24	1300	5500	4.1	300	0.14	1300	5500	
C 32 3_136.0	136.0	6.6	300	0.22	1300	5500	3.7	300	0.12	1300	5500	
C 32 3_148.4	148.4	6.1	300	0.20	1300	5500	3.4	300	0.11	1300	5500	
C 32 3_167.4	167.4	5.4	300	0.18	1300	5500	3.0	300	0.10	1300	5500	
C 32 3_186.0	186.0	4.8	300	0.16	1300	5500	2.7	300	0.09	1300	5500	
C 32 3_215.6	215.6	4.2	300	0.14	1300	5500	2.3	300	0.08	1300	5500	
C 32 3_244.2	244.2	3.7	260	0.11	1300	5500	2.0	275	0.06	1300	5500	
C 32 3_274.7	274.7	3.3	260	0.09	1300	5500	1.8	275	0.06	1300	5500	

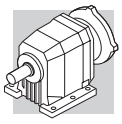

C 36 — 450 Nm

	i	n_1 = 2800 min^{-1}					n_1 = 1400 min^{-1}					
		n_2 min^{-1}	M_{n2} Nm	P_{n1} kW	R_{n1} N	R_{n2} N	n_2 min^{-1}	M_{n2} Nm	P_{n1} kW	R_{n1} N	R_{n2} N	
C 36 2_2.7	2.7	1042	140	16.1	670	1750	521	170	9.8	1150	2240	
C 36 2_3.2	3.2	880	145	14.1	790	1870	440	177	8.6	1240	2380	
C 36 2_3.5	3.5	803	150	13.3	910	1920	402	185	8.2	1320	2440	
C 36 2_4.2	4.2	667	157	11.5	920	2050	333	192	7.1	1410	2620	
C 36 2_4.6	4.6	606	165	11.0	920	2110	303	200	6.7	1470	2700	
C 36 2_5.3	5.3	530	167	9.8	990	2230	265	200	5.8	1650	2870	
C 36 2_5.8	5.8	479	170	9.0	1160	2330	239	200	5.3	1990	3020	
C 36 2_6.8	6.8	413	285	13.0	1750	2130	206	355	8.1	2220	2710	
C 36 2_8.0	8.0	349	297	11.4	1770	2270	174	365	7.0	2250	2910	
C 36 2_8.8	8.8	318	310	10.9	1780	2330	159	380	6.7	2270	3000	
C 36 2_10.6	10.6	264	325	9.5	1790	2500	132	380	5.5	2320	3290	
C 36 2_11.7	11.7	240	340	9.0	1790	2560	120	380	5.0	2370	3460	
C 36 2_13.3	13.3	210	350	8.1	1800	2700	105	380	4.4	2400	3670	
C 36 2_14.8	14.8	190	360	7.5	1800	2810	95	380	4.0	2440	3890	
C 36 2_17.2	17.2	163	370	6.6	1810	3000	81	380	3.4	2460	4200	
C 36 2_19.0	19.0	147	380	6.2	1820	3110	74	380	3.1	2500	4400	
C 36 3_22.1	22.1	127	340	4.7	2300	3570	63	430	3.0	2900	4490	
C 36 3_26.2	26.2	107	355	4.2	2300	3790	53	440	2.6	2910	4810	
C 36 3_28.7	28.7	98	385	4.1	2300	3820	49	450	2.4	2930	4980	
C 36 3_34.6	34.6	81	400	3.6	2300	4100	40	450	2.0	2950	5420	
C 36 3_38.1	38.1	74	435	3.5	2300	4140	37	450	1.8	2970	5690	
C 36 3_43.5	43.5	64	440	3.1	2300	4450	32	450	1.6	2980	6050	
C 36 3_48.2	48.2	58	450	2.9	2310	4580	29.1	450	1.4	2990	6330	
C 36 3_56.2	56.2	50	450	2.5	2320	4970	24.9	450	1.2	2990	6500	
C 36 3_62.0	62.0	45	450	2.2	2330	5170	22.6	450	1.1	3000	6500	137
C 36 3_70.8	70.8	40	450	2.0	2340	5520	19.8	450	0.98	3000	6500	
C 36 3_77.6	77.6	36	450	1.8	2350	5740	18.0	450	0.90	3000	6500	
C 36 3_83.1	83.1	34	450	1.7	2350	5930	16.8	450	0.84	3000	6500	
C 36 3_91.9	91.9	30	450	1.5	2360	6200	15.2	450	0.76	3000	6500	
C 36 3_102.2	102.2	27.4	450	1.4	2360	6400	13.7	450	0.68	3000	6500	
C 36 3_111.5	111.5	25.1	450	1.2	2360	6500	12.6	450	0.62	3000	6500	
C 36 3_125.8	125.8	22.3	450	1.1	2370	6500	11.1	450	0.55	3000	6500	
C 36 3_139.8	139.8	20.0	450	0.99	2370	6500	10.0	450	0.50	3000	6500	
C 36 3_162.0	162.0	17.3	450	0.86	2380	6500	8.6	450	0.43	3000	6500	
C 36 3_183.5	183.5	15.3	450	0.76	2380	6500	7.6	450	0.38	3000	6500	
C 36 3_206.4	206.4	13.6	450	0.67	2380	6500	6.8	450	0.34	3000	6500	
C 36 4_230.9	230.9	12.1	450	0.60	1150	6500	6.1	450	0.30	1300	6500	
C 36 4_255.0	255.0	11.0	450	0.54	1190	6500	5.5	450	0.27	1300	6500	
C 36 4_290.9	290.9	9.6	450	0.48	1210	6500	4.8	450	0.24	1300	6500	
C 36 4_318.9	318.9	8.8	450	0.44	1230	6500	4.4	450	0.22	1300	6500	
C 36 4_341.7	341.7	8.2	450	0.41	1240	6500	4.1	450	0.20	1300	6500	
C 36 4_377.9	377.9	7.4	450	0.37	1260	6500	3.7	450	0.18	1300	6500	
C 36 4_420.2	420.2	6.7	450	0.33	1270	6500	3.3	450	0.17	1300	6500	
C 36 4_458.4	458.4	6.1	450	0.30	1280	6500	3.1	450	0.15	1300	6500	
C 36 4_517.2	517.2	5.4	450	0.27	1300	6500	2.7	450	0.13	1300	6500	
C 36 4_574.7	574.7	4.9	450	0.24	1300	6500	2.4	450	0.12	1300	6500	
C 36 4_665.9	665.9	4.2	450	0.21	1300	6500	2.1	450	0.10	1300	6500	
C 36 4_754.2	754.2	3.7	450	0.18	1300	6500	1.9	450	0.09	1300	6500	
C 36 4_848.5	848.5	3.3	450	0.16	1300	6500	1.6	450	0.08	1300	6500	

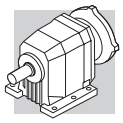

C 36 — 450 Nm

	i	n_1 = 900 min^{-1}					n_1 = 500 min^{-1}					
		n_2 min^{-1}	M_{n2} Nm	P_{n1} kW	R_{n1} N	R_{n2} N	n_2 min^{-1}	M_{n2} Nm	P_{n1} kW	R_{n1} N	R_{n2} N	
C 36 2_2.7	2.7	335	190	7.0	1670	2640	186	200	4.1	3000	3390	
C 36 2_3.2	3.2	283	190	5.9	2080	2790	157	200	3.5	3000	3650	
C 36 2_3.5	3.5	258	200	5.7	2160	2920	143	200	3.2	3000	3810	
C 36 2_4.2	4.2	214	200	4.7	2410	3170	119	200	2.6	3000	4100	
C 36 2_4.6	4.6	195	200	4.3	2590	3320	108	200	2.4	3000	4300	
C 36 2_5.3	5.3	171	200	3.8	2630	3500	95	200	2.1	3000	4520	
C 36 2_5.8	5.8	154	200	3.4	2680	3690	86	200	1.9	3000	4740	
C 36 2_6.8	6.8	133	380	5.6	2660	3290	74	380	3.1	3000	4400	
C 36 2_8.0	8.0	112	380	4.7	2720	3580	62	380	2.6	3000	4750	
C 36 2_8.8	8.8	102	380	4.3	2790	3750	57	380	2.4	3000	4960	
C 36 2_10.6	10.6	85	380	3.6	2850	4110	47	380	2.0	3000	5360	
C 36 2_11.7	11.7	77	380	3.2	2900	4300	43	380	1.8	3000	5630	
C 36 2_13.3	13.3	68	380	2.8	2930	4590	38	380	1.6	3000	5930	
C 36 2_14.8	14.8	61	380	2.6	2970	4800	34	380	1.4	3000	6240	
C 36 2_17.2	17.2	52	380	2.2	2980	5100	29.1	380	1.2	3000	6330	
C 36 2_19.0	19.0	47	380	2.0	3000	5390	26.3	380	1.1	3000	6500	
C 36 3_22.1	22.1	41	450	2.0	3000	5430	22.6	450	1.1	3000	6500	
C 36 3_26.2	26.2	34	450	1.7	3000	5850	19.1	450	0.95	3000	6500	
C 36 3_28.7	28.7	31	450	1.6	3000	6120	17.4	450	0.86	3000	6500	
C 36 3_34.6	34.6	26.0	450	1.3	3000	6500	14.5	450	0.72	3000	6500	
C 36 3_38.1	38.1	23.6	450	1.2	3000	6500	13.1	450	0.65	3000	6500	
C 36 3_43.5	43.5	20.7	450	1.0	3000	6500	11.5	450	0.57	3000	6500	
C 36 3_48.2	48.2	18.7	450	0.93	3000	6500	10.4	450	0.52	3000	6500	
C 36 3_56.2	56.2	16.0	450	0.79	3000	6500	8.9	450	0.44	3000	6500	
C 36 3_62.0	62.0	14.5	450	0.72	3000	6500	8.1	450	0.40	3000	6500	137
C 36 3_70.8	70.8	12.7	450	0.63	3000	6500	7.1	450	0.35	3000	6500	
C 36 3_77.6	77.6	11.6	450	0.58	3000	6500	6.4	450	0.32	3000	6500	
C 36 3_83.1	83.1	10.8	450	0.54	3000	6500	6.0	450	0.30	3000	6500	
C 36 3_91.9	91.9	9.8	450	0.49	3000	6500	5.4	450	0.27	3000	6500	
C 36 3_102.2	102.2	8.8	450	0.44	3000	6500	4.9	450	0.24	3000	6500	
C 36 3_111.5	111.5	8.1	450	0.40	3000	6500	4.5	450	0.22	3000	6500	
C 36 3_125.8	125.8	7.2	450	0.35	3000	6500	4.0	450	0.20	3000	6500	
C 36 3_139.8	139.8	6.4	450	0.32	3000	6500	3.6	450	0.18	3000	6500	
C 36 3_162.0	162.0	5.6	450	0.28	3000	6500	3.1	450	0.15	3000	6500	
C 36 3_183.5	183.5	4.9	450	0.24	3000	6500	2.7	450	0.14	3000	6500	
C 36 3_206.4	206.4	4.4	450	0.22	3000	6500	2.4	450	0.12	3000	6500	
C 36 4_230.9	230.9	3.9	450	0.19	1300	6500	2.2	450	0.11	1300	6500	
C 36 4_255.0	255.0	3.5	450	0.18	1300	6500	2.0	450	0.10	1300	6500	
C 36 4_290.9	290.9	3.1	450	0.15	1300	6500	1.7	450	0.09	1300	6500	
C 36 4_318.9	318.9	2.8	450	0.14	1300	6500	1.6	450	0.08	1300	6500	
C 36 4_341.7	341.7	2.6	450	0.13	1300	6500	1.5	450	0.07	1300	6500	
C 36 4_377.9	377.9	2.4	450	0.12	1300	6500	1.3	450	0.07	1300	6500	
C 36 4_420.2	420.2	2.1	450	0.11	1300	6500	1.2	450	0.06	1300	6500	
C 36 4_458.4	458.4	2.0	450	0.10	1300	6500	1.1	450	0.05	1300	6500	
C 36 4_517.2	517.2	1.7	450	0.09	1300	6500	1.0	450	0.05	1300	6500	
C 36 4_574.7	574.7	1.6	450	0.08	1300	6500	0.9	450	0.04	1300	6500	
C 36 4_665.9	665.9	1.4	450	0.07	1300	6500	0.8	450	0.04	1300	6500	
C 36 4_754.2	754.2	1.2	450	0.06	1300	6500	0.7	450	0.03	1300	6500	
C 36 4_848.5	848.5	1.1	450	0.05	1300	6500	0.6	450	0.03	1300	6500	

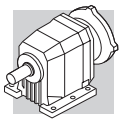

C 41 — 600 Nm

	i	n_1 = 2800 min^{-1}					n_1 = 1400 min^{-1}					
		n_2 min^{-1}	M_{n2} Nm	P_{n1} kW	R_{n1} N	R_{n2} N	n_2 min^{-1}	M_{n2} Nm	P_{n1} kW	R_{n1} N	R_{n2} N	
C 41 2_2.7	2.7	1037	245	28	980	1290	519	245	14.0	1390	2060	
C 41 2_3.6	3.6	778	255	22	1070	1540	389	255	10.9	1650	2390	
C 41 2_4.7	4.7	596	260	17.1	1170	1800	298	260	8.5	2010	2730	
C 41 2_6.0	6.0	467	260	13.4	1290	2100	233	260	6.7	2400	3110	
C 41 2_6.4	6.4	438	275	13.3	2270	2590	219	345	8.3	2860	3260	
C 41 2_7.1	7.1	394	285	12.4	2360	2700	197	355	7.7	2980	3420	
C 41 2_8.6	8.6	326	305	10.9	2300	2860	163	385	6.9	2900	3600	
C 41 2_9.6	9.6	292	310	10.0	2410	3010	146	390	6.3	3030	3800	
C 41 2_11.2	11.2	250	335	9.2	2310	3100	125	420	5.8	2910	3920	
C 41 2_12.4	12.4	226	340	8.5	2440	3270	113	425	5.3	3070	4140	
C 41 2_14.2	14.2	197	355	7.7	2330	3410	99	445	4.8	2980	4300	
C 41 2_15.8	15.8	177	360	7.0	2460	3590	89	450	4.4	3120	4540	
C 41 2_17.8	17.8	157	380	6.6	2330	3680	79	480	4.2	3050	4630	
C 41 2_19.8	19.8	141	385	6.0	2460	3880	71	485	3.8	3180	4890	
C 41 2_22.6	22.6	124	410	5.6	2320	3990	62	500	3.4	3110	5110	
C 41 2_25.0	25.0	112	415	5.1	2460	4210	56	500	3.1	3230	5420	
C 41 2_28.3	28.3	99	445	4.9	2310	4290	49	500	2.7	3180	5710	
C 41 2_31.4	31.4	89	445	4.4	2440	4550	45	500	2.5	3300	6040	
C 41 2_33.4	33.4	84	465	4.3	2390	4560	42	500	2.3	3220	6170	
C 41 2_37.1	37.1	75	470	3.9	2440	4810	38	500	2.1	3320	6520	
C 41 2_44.8	44.8	63	500	3.4	2660	5130	31	500	1.7	3500	7000	
C 41 3_28.5	28.5	98	445	4.9	3060	4300	49	560	3.1	3500	5420	
C 41 3_31.2	31.2	90	450	4.5	3090	4510	45	570	2.9	3500	5670	
C 41 3_36.8	36.8	76	480	4.1	3070	4710	38	600	2.6	3500	5960	
C 41 3_40.3	40.3	69	485	3.8	3100	4940	35	600	2.3	3500	6280	
C 41 3_47.0	47.0	60	515	3.5	3070	5140	29.8	600	2.0	3500	6720	
C 41 3_51.5	51.5	54	525	3.2	3090	5360	27.2	600	1.8	3500	7000	
C 41 3_58.7	58.7	48	550	3.0	3070	5550	23.9	600	1.6	3500	7000	141
C 41 3_64.3	64.3	44	560	2.7	3090	5800	21.8	600	1.5	3500	7000	
C 41 3_74.4	74.4	38	590	2.5	3060	6040	18.8	600	1.3	3500	7000	
C 41 3_81.5	81.5	34	600	2.3	3090	6310	17.2	600	1.2	3500	7000	
C 41 3_93.3	93.3	30	600	2.0	3080	6700	15.0	600	1.0	3500	7000	
C 41 3_102.3	102.3	27.4	600	1.8	3110	7000	13.7	600	0.92	3500	7000	
C 41 3_110.1	110.1	25.4	600	1.7	3090	7000	12.7	600	0.86	3500	7000	
C 41 3_120.6	120.6	23.2	600	1.6	3110	7000	11.6	600	0.78	3500	7000	
C 41 3_132.9	132.9	21.1	600	1.4	3090	7000	10.5	600	0.71	3500	7000	
C 41 3_145.6	145.6	19.2	600	1.3	3120	7000	9.6	600	0.65	3500	7000	
C 41 3_164.1	164.1	17.1	600	1.2	3100	7000	8.5	600	0.58	3500	7000	
C 41 3_179.9	179.9	15.6	600	1.1	3120	7000	7.8	600	0.53	3500	7000	
C 41 3_190.8	190.8	14.7	600	0.99	3110	7000	7.3	600	0.50	3500	7000	
C 41 3_209.1	209.1	13.4	600	0.90	3130	7000	6.7	600	0.45	3500	7000	
C 41 4_239.9	239.9	11.7	600	0.81	1480	7000	5.8	600	0.40	1910	7000	
C 41 4_263.0	263.0	10.6	600	0.74	1500	7000	5.3	600	0.37	1920	7000	
C 41 4_304.2	304.2	9.2	600	0.64	1520	7000	4.6	600	0.32	1950	7000	
C 41 4_333.4	333.4	8.4	600	0.58	1530	7000	4.2	600	0.29	1960	7000	
C 41 4_381.8	381.8	7.3	600	0.51	1540	7000	3.7	600	0.25	1970	7000	
C 41 4_418.5	418.5	6.7	600	0.46	1550	7000	3.3	600	0.23	1980	7000	
C 41 4_450.2	450.2	6.2	600	0.43	1560	7000	3.1	600	0.21	1990	7000	
C 41 4_493.5	493.5	5.7	600	0.39	1570	7000	2.8	600	0.20	2000	7000	
C 41 4_543.5	543.5	5.2	600	0.36	1570	7000	2.6	600	0.18	2000	7000	
C 41 4_595.8	595.8	4.7	600	0.32	1580	7000	2.3	600	0.16	2010	7000	
C 41 4_671.3	671.3	4.2	600	0.29	1590	7000	2.1	600	0.14	2020	7000	
C 41 4_735.9	735.9	3.8	600	0.26	1590	7000	1.9	600	0.13	2020	7000	
C 41 4_780.4	780.4	3.6	600	0.25	1600	7000	1.8	600	0.12	2030	7000	
C 41 4_855.5	855.5	3.3	600	0.23	1600	7000	1.6	600	0.11	2030	7000	

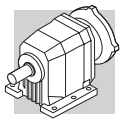

C 41 — 600 Nm

	i	n_1 = 900 min^{-1}					n_1 = 500 min^{-1}					
		n_2 min^{-1}	M_{n2} Nm	P_{n1} kW	R_{n1} N	R_{n2} N	n_2 min^{-1}	M_{n2} Nm	P_{n1} kW	R_{n1} N	R_{n2} N	
C 41 2_2.7	2.7	333	245	9.0	2560	2650	185	245	5.0	3500	3590	
C 41 2_3.6	3.6	250	255	7.0	2710	3050	139	255	3.9	3500	4090	
C 41 2_4.7	4.7	191	260	5.5	2900	3440	106	260	3.0	3500	4570	
C 41 2_6.0	6.0	150	260	4.3	3080	3890	83	260	2.4	3500	5110	
C 41 2_6.4	6.4	141	400	6.2	3310	3780	78	490	4.2	3500	4580	
C 41 2_7.1	7.1	127	415	5.8	3460	3940	70	500	3.9	3500	4820	
C 41 2_8.6	8.6	105	445	5.1	3360	4180	58	500	3.2	3500	5290	
C 41 2_9.6	9.6	94	450	4.7	3500	4410	52	500	2.9	3500	5600	
C 41 2_11.2	11.2	80	490	4.3	3500	4520	45	500	2.5	3500	5980	
C 41 2_12.4	12.4	73	495	4.0	3500	4780	40	500	2.2	3500	6320	
C 41 2_14.2	14.2	63	500	3.5	3500	5060	35	500	1.9	3500	6700	
C 41 2_15.8	15.8	57	500	3.1	3500	5370	32	500	1.7	3500	7000	
C 41 2_17.8	17.8	51	500	2.8	3500	5650	28.1	500	1.5	3500	7000	
C 41 2_19.8	19.8	45	500	2.5	3500	5970	25.3	500	1.4	3500	7000	
C 41 2_22.6	22.6	40	500	2.2	3500	6320	22.1	500	1.2	3500	7000	
C 41 2_25.0	25.0	36	500	2.0	3500	6670	20.0	500	1.1	3500	7000	
C 41 2_28.3	28.3	32	500	1.8	3500	7000	17.7	500	0.97	3500	7000	
C 41 2_31.4	31.4	28.7	500	1.6	3500	7000	15.9	500	0.88	3500	7000	
C 41 2_33.4	33.4	26.9	500	1.5	3500	7000	15.0	500	0.83	3500	7000	
C 41 2_37.1	37.1	24.3	500	1.3	3500	7000	13.5	500	0.74	3500	7000	
C 41 2_44.8	44.8	20.1	500	1.1	3500	7000	11.2	500	0.62	3500	7000	
C 41 3_28.5	28.5	32	600	2.1	3500	6530	17.5	600	1.2	3500	7000	
C 41 3_31.2	31.2	28.8	600	1.9	3500	6870	16.0	600	1.1	3500	7000	
C 41 3_36.8	36.8	24.5	600	1.7	3500	7000	13.6	600	0.92	3500	7000	
C 41 3_40.3	40.3	22.3	600	1.5	3500	7000	12.4	600	0.84	3500	7000	
C 41 3_47.0	47.0	19.1	600	1.3	3500	7000	10.6	600	0.72	3500	7000	
C 41 3_51.5	51.5	17.5	600	1.2	3500	7000	9.7	600	0.66	3500	7000	
C 41 3_58.7	58.7	15.3	600	1.0	3500	7000	8.5	600	0.58	3500	7000	141
C 41 3_64.3	64.3	14.0	600	0.95	3500	7000	7.8	600	0.53	3500	7000	
C 41 3_74.4	74.4	12.1	600	0.82	3500	7000	6.7	600	0.45	3500	7000	
C 41 3_81.5	81.5	11.0	600	0.75	3500	7000	6.1	600	0.41	3500	7000	
C 41 3_93.3	93.3	9.6	600	0.65	3500	7000	5.4	600	0.36	3500	7000	
C 41 3_102.3	102.3	8.8	600	0.59	3500	7000	4.9	600	0.33	3500	7000	
C 41 3_110.1	110.1	8.2	600	0.55	3500	7000	4.5	600	0.31	3500	7000	
C 41 3_120.6	120.6	7.5	600	0.50	3500	7000	4.1	600	0.28	3500	7000	
C 41 3_132.9	132.9	6.8	600	0.46	3500	7000	3.8	600	0.25	3500	7000	
C 41 3_145.6	145.6	6.2	600	0.42	3500	7000	3.4	600	0.23	3500	7000	
C 41 3_164.1	164.1	5.5	600	0.37	3500	7000	3.0	600	0.21	3500	7000	
C 41 3_179.9	179.9	5.0	600	0.34	3500	7000	2.8	600	0.19	3500	7000	
C 41 3_190.8	190.8	4.7	600	0.32	3500	7000	2.6	600	0.18	3500	7000	
C 41 3_209.1	209.1	4.3	600	0.29	3500	7000	2.4	600	0.16	3500	7000	
C 41 4_239.9	239.9	3.8	600	0.26	2200	7000	2.1	600	0.14	2200	7000	
C 41 4_263.0	263.0	3.4	600	0.24	2200	7000	1.9	600	0.13	2200	7000	
C 41 4_304.2	304.2	3.0	600	0.20	2200	7000	1.6	600	0.11	2200	7000	
C 41 4_333.4	333.4	2.7	600	0.19	2200	7000	1.5	600	0.10	2200	7000	
C 41 4_381.8	381.8	2.4	600	0.16	2200	7000	1.3	600	0.09	2200	7000	
C 41 4_418.5	418.5	2.2	600	0.15	2200	7000	1.2	600	0.08	2200	7000	
C 41 4_450.2	450.2	2.0	600	0.14	2200	7000	1.1	600	0.08	2200	7000	
C 41 4_493.5	493.5	1.8	600	0.13	2200	7000	1.0	600	0.07	2200	7000	
C 41 4_543.5	543.5	1.7	600	0.11	2200	7000	0.92	600	0.06	2200	7000	
C 41 4_595.8	595.8	1.5	600	0.10	2200	7000	0.84	600	0.06	2200	7000	
C 41 4_671.3	671.3	1.3	600	0.09	2200	7000	0.74	600	0.05	2200	7000	
C 41 4_735.9	735.9	1.2	600	0.08	2200	7000	0.68	600	0.05	2200	7000	
C 41 4_780.4	780.4	1.2	600	0.08	2200	7000	0.64	600	0.04	2200	7000	
C 41 4_855.5	855.5	1.1	600	0.07	2200	7000	0.58	600	0.04	2200	7000	

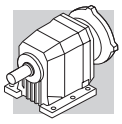

C 51 — 1000 Nm

	i	n_1 = 2800 min^{-1}					n_1 = 1400 min^{-1}					
		n_2 min^{-1}	M_{n2} Nm	P_{n1} kW	R_{n1} N	R_{n2} N	n_2 min^{-1}	M_{n2} Nm	P_{n1} kW	R_{n1} N	R_{n2} N	
C 51 2_2.6	2.6	1077	315	37	980	3340	538	400	24	1390	4200	
C 51 2_3.3	3.3	848	340	32	1070	3610	424	420	19.6	1650	4580	
C 51 2_4.5	4.5	622	370	25	1170	4010	311	435	14.9	2010	5180	
C 51 2_5.6	5.6	500	390	21	1290	4380	250	435	12.0	2400	5760	
C 51 2_7.0	7.0	400	500	22	2270	4760	200	630	13.9	2860	6000	
C 51 2_7.8	7.8	359	510	20	2360	4940	179	640	12.7	2980	6230	
C 51 2_8.8	8.8	318	545	19.1	2300	5120	159	685	12.0	2900	6450	
C 51 2_9.8	9.8	286	545	17.2	2410	5350	143	685	10.8	3030	6750	
C 51 2_11.8	11.8	237	610	16.0	2310	5620	119	770	10.1	2910	7080	
C 51 2_13.1	13.1	214	595	14.0	2440	5930	107	750	8.8	3070	7470	
C 51 2_15.0	15.0	187	660	13.6	2330	6080	93	800	8.2	2980	7770	
C 51 2_16.6	16.6	169	640	11.9	2460	6420	84	795	7.4	3120	8130	
C 51 2_18.9	18.9	148	695	11.3	2330	6630	74	800	6.5	3050	8620	
C 51 2_21.0	21.0	133	675	9.9	2460	7000	67	795	5.8	3180	9020	
C 51 2_23.4	23.4	120	735	9.7	2320	7160	60	800	5.3	3110	9460	
C 51 2_25.9	25.9	108	715	8.5	2460	7550	54	795	4.7	3230	9890	
C 51 2_29.8	29.8	94	795	8.2	2310	7770	47	800	4.1	3180	10000	
C 51 2_33.0	33.0	85	775	7.2	2440	8190	42	795	3.7	3300	10000	
C 51 2_36.4	36.4	77	750	6.4	2390	8660	38	790	3.3	3220	10000	
C 51 2_40.4	40.4	69	795	6.1	2440	8870	35	795	3.0	3320	10000	
C 51 2_43.1	43.1	65	730	5.2	2450	9380	32	770	2.8	3280	10000	
C 51 2_47.8	47.8	59	800	5.2	2460	9530	29.3	800	2.6	3350	10000	
C 51 2_51.4	51.4	54	665	4.0	2550	10000	27.2	700	2.1	3390	10000	
C 51 2_57.0	57.0	49	745	4.0	2540	10000	24.6	785	2.1	3380	10000	
C 51 3_21.8	21.8	128	720	10.4	2870	6940	64	905	6.5	3500	8750	
C 51 3_23.9	23.9	117	730	9.6	2910	7230	59	920	6.1	3500	9110	
C 51 3_27.4	27.4	102	770	8.9	2890	7510	51	970	5.6	3500	9470	
C 51 3_30.1	30.1	93	780	8.2	2930	7830	47	1000	5.2	3500	9810	
C 51 3_37.0	37.0	76	840	7.2	2910	8330	38	1000	4.3	3500	10000	
C 51 3_40.5	40.5	69	855	6.7	2940	8670	35	1000	3.9	3500	10000	145
C 51 3_46.7	46.7	60	905	6.1	2920	9020	30	1000	3.4	3500	10000	
C 51 3_51.2	51.2	55	920	5.7	2950	9390	27.3	1000	3.1	3500	10000	
C 51 3_59.0	59.0	47	970	5.2	2910	9780	23.7	1000	2.7	3500	10000	
C 51 3_64.6	64.6	43	1000	4.9	2940	10000	21.7	1000	2.4	3500	10000	
C 51 3_72.9	72.9	38	1000	4.3	2920	10000	19.2	1000	2.2	3500	10000	
C 51 3_79.9	79.9	35	1000	3.9	2960	10000	17.5	1000	2.0	3500	10000	
C 51 3_93.0	93.0	30	1000	3.4	2950	10000	15.1	1000	1.7	3500	10000	
C 51 3_101.8	101.8	27.5	1000	3.1	2990	10000	13.8	1000	1.5	3500	10000	
C 51 3_113.6	113.6	24.6	1000	2.8	2960	10000	12.3	1000	1.4	3500	10000	
C 51 3_124.4	124.4	22.5	1000	2.5	3000	10000	11.3	1000	1.3	3500	10000	
C 51 3_134.6	134.6	20.8	1000	2.3	2970	10000	10.4	1000	1.2	3500	10000	
C 51 3_147.4	147.4	19.0	1000	2.1	3010	10000	9.5	1000	1.1	3500	10000	
C 51 3_160.5	160.5	17.4	1000	2.0	2980	10000	8.7	1000	0.98	3500	10000	
C 51 3_175.8	175.8	15.9	1000	1.8	3020	10000	8.0	1000	0.90	3500	10000	
C 51 3_197.9	197.9	14.1	1000	1.6	2980	10000	7.1	1000	0.80	3500	10000	
C 51 3_216.7	216.7	12.9	1000	1.5	3020	10000	6.5	1000	0.73	3500	10000	
C 51 4_240.9	240.9	11.6	1000	1.3	2100	10000	5.8	1000	0.67	2200	10000	
C 51 4_263.8	263.8	10.6	1000	1.2	2120	10000	5.3	1000	0.61	2200	10000	
C 51 4_297.8	297.8	9.4	1000	1.1	2140	10000	4.7	1000	0.54	2200	10000	
C 51 4_326.1	326.1	8.6	1000	0.99	2160	10000	4.3	1000	0.49	2200	10000	
C 51 4_379.6	379.6	7.4	1000	0.85	2190	10000	3.7	1000	0.42	2200	10000	
C 51 4_415.7	415.7	6.7	1000	0.78	2200	10000	3.4	1000	0.39	2200	10000	
C 51 4_463.9	463.9	6.0	1000	0.69	2200	10000	3.0	1000	0.35	2200	10000	
C 51 4_508.0	508.0	5.5	1000	0.63	2200	10000	2.8	1000	0.32	2200	10000	
C 51 4_549.7	549.7	5.1	1000	0.59	2200	10000	2.5	1000	0.29	2200	10000	
C 51 4_602.0	602.0	4.7	1000	0.54	2200	10000	2.3	1000	0.27	2200	10000	
C 51 4_655.4	655.4	4.3	1000	0.49	2200	10000	2.1	1000	0.25	2200	10000	
C 51 4_717.7	717.7	3.9	1000	0.45	2200	10000	2.0	1000	0.22	2200	10000	
C 51 4_808.0	808.0	3.5	1000	0.40	2200	10000	1.7	1000	0.20	2200	10000	
C 51 4_884.9	884.9	3.2	1000	0.36	2200	10000	1.6	1000	0.18	2200	10000	

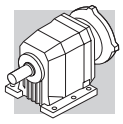

C 51 — 1000 Nm

	i	n_1 = 900 min^{-1}					n_1 = 500 min^{-1}					
		n_2	M_{n2}	P_{n1}	R_{n1}	R_{n2}	n_2	M_{n2}	P_{n1}	R_{n1}	R_{n2}	
		min^{-1}	Nm	kW	N	N	min^{-1}	Nm	kW	N	N	
C 51 2_2.6	2.6	346	400	15.3	2560	5130	192	400	8.5	3500	6620	
C 51 2_3.3	3.3	273	420	12.6	2710	5590	152	420	7.0	3500	7200	
C 51 2_4.5	4.5	200	435	9.6	2900	6300	111	435	5.3	3500	8070	
C 51 2_5.6	5.6	161	435	7.7	3080	6970	89	435	4.3	3500	8880	
C 51 2_7.0	7.0	129	730	10.3	3310	6950	71	800	6.3	3500	8760	
C 51 2_7.8	7.8	115	740	9.4	3460	7220	64	800	5.7	3500	9140	
C 51 2_8.8	8.8	102	795	9.0	3360	7470	57	800	5.0	3500	9680	
C 51 2_9.8	9.8	92	800	8.1	3500	7790	51	800	4.5	3500	10000	
C 51 2_11.8	11.8	76	800	6.7	3500	8530	42	800	3.7	3500	10000	
C 51 2_13.1	13.1	69	800	6.1	3500	8900	38	800	3.4	3500	10000	
C 51 2_15.0	15.0	60	800	5.3	3500	9450	33	800	2.9	3500	10000	
C 51 2_16.6	16.6	54	800	4.8	3500	9850	30	800	2.7	3500	10000	
C 51 2_18.9	18.9	48	800	4.2	3500	10000	26.5	800	2.3	3500	10000	
C 51 2_21.0	21.0	43	800	3.8	3500	10000	23.8	800	2.1	3500	10000	
C 51 2_23.4	23.4	38	800	3.4	3500	10000	21.4	800	1.9	3500	10000	
C 51 2_25.9	25.9	35	800	3.1	3500	10000	19.3	800	1.7	3500	10000	
C 51 2_29.8	29.8	30	800	2.7	3500	10000	16.8	800	1.5	3500	10000	
C 51 2_33.0	33.0	27.3	800	2.4	3500	10000	15.2	800	1.3	3500	10000	
C 51 2_36.4	36.4	24.7	800	2.2	3500	10000	13.7	800	1.2	3500	10000	
C 51 2_40.4	40.4	22.3	800	2.0	3500	10000	12.4	800	1.1	3500	10000	
C 51 2_43.1	43.1	20.9	800	1.8	3500	10000	11.6	800	1.0	3500	10000	
C 51 2_47.8	47.8	18.8	800	1.7	3500	10000	10.5	800	0.92	3500	10000	
C 51 2_51.4	51.4	17.5	725	1.4	3500	10000	9.7	755	0.81	3500	10000	
C 51 2_57.0	57.0	15.8	795	1.4	3500	10000	8.8	795	0.77	3500	10000	
C 51 3_21.8	21.8	41	1000	4.6	3500	10000	22.9	1000	2.6	3500	10000	
C 51 3_23.9	23.9	38	1000	4.2	3500	10000	20.9	1000	2.4	3500	10000	
C 51 3_27.4	27.4	33	1000	3.7	3500	10000	18.2	1000	2.1	3500	10000	
C 51 3_30.1	30.1	29.9	1000	3.4	3500	10000	16.6	1000	1.9	3500	10000	
C 51 3_37.0	37.0	24.3	1000	2.7	3500	10000	13.5	1000	1.5	3500	10000	
C 51 3_40.5	40.5	22.2	1000	2.5	3500	10000	12.3	1000	1.4	3500	10000	145
C 51 3_46.7	46.7	19.3	1000	2.2	3500	10000	10.7	1000	1.2	3500	10000	
C 51 3_51.2	51.2	17.6	1000	2.0	3500	10000	9.8	1000	1.1	3500	10000	
C 51 3_59.0	59.0	15.3	1000	1.7	3500	10000	8.5	1000	0.95	3500	10000	
C 51 3_64.6	64.6	13.9	1000	1.6	3500	10000	7.7	1000	0.87	3500	10000	
C 51 3_72.9	72.9	12.3	1000	1.4	3500	10000	6.9	1000	0.77	3500	10000	
C 51 3_79.9	79.9	11.3	1000	1.3	3500	10000	6.3	1000	0.70	3500	10000	
C 51 3_93.0	93.0	9.7	1000	1.1	3500	10000	5.4	1000	0.61	3500	10000	
C 51 3_101.8	101.8	8.8	1000	1.0	3500	10000	4.9	1000	0.55	3500	10000	
C 51 3_113.6	113.6	7.9	1000	0.89	3500	10000	4.4	1000	0.50	3500	10000	
C 51 3_124.4	124.4	7.2	1000	0.81	3500	10000	4.0	1000	0.45	3500	10000	
C 51 3_134.6	134.6	6.7	1000	0.75	3500	10000	3.7	1000	0.42	3500	10000	
C 51 3_147.4	147.4	6.1	1000	0.69	3500	10000	3.4	1000	0.38	3500	10000	
C 51 3_160.5	160.5	5.6	1000	0.63	3500	10000	3.1	1000	0.35	3500	10000	
C 51 3_175.8	175.8	5.1	1000	0.58	3500	10000	2.8	1000	0.32	3500	10000	
C 51 3_197.9	197.9	4.5	1000	0.51	3500	10000	2.5	1000	0.28	3500	10000	
C 51 3_216.7	216.7	4.2	1000	0.47	3500	10000	2.3	1000	0.26	3500	10000	
C 51 4_240.9	240.9	3.7	1000	0.43	2200	10000	2.1	1000	0.24	2200	10000	
C 51 4_263.8	263.8	3.4	1000	0.39	2200	10000	1.9	1000	0.22	2200	10000	
C 51 4_297.8	297.8	3.0	1000	0.35	2200	10000	1.7	1000	0.19	2200	10000	
C 51 4_326.1	326.1	2.8	1000	0.32	2200	10000	1.5	1000	0.18	2200	10000	
C 51 4_379.6	379.6	2.4	1000	0.27	2200	10000	1.3	1000	0.15	2200	10000	
C 51 4_415.7	415.7	2.2	1000	0.25	2200	10000	1.2	1000	0.14	2200	10000	
C 51 4_463.9	463.9	1.9	1000	0.22	2200	10000	1.1	1000	0.12	2200	10000	
C 51 4_508.0	508.0	1.8	1000	0.20	2200	10000	1.0	1000	0.11	2200	10000	
C 51 4_549.7	549.7	1.6	1000	0.19	2200	10000	0.91	1000	0.10	2200	10000	
C 51 4_602.0	602.0	1.5	1000	0.17	2200	10000	0.83	1000	0.10	2200	10000	
C 51 4_655.4	655.4	1.4	1000	0.16	2200	10000	0.76	1000	0.09	2200	10000	
C 51 4_717.7	717.7	1.3	1000	0.14	2200	10000	0.70	1000	0.08	2200	10000	
C 51 4_808.0	808.0	1.1	1000	0.13	2200	10000	0.62	1000	0.07	2200	10000	
C 51 4_884.9	884.9	1.0	1000	0.12	2200	10000	0.57	1000	0.07	2200	10000	

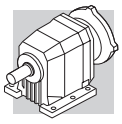

C 61 — 1600 Nm

	i	n_1 = 2800 min^{-1}					n_1 = 1400 min^{-1}					
		n_2 min^{-1}	M_{n2} Nm	P_{n1} kW	R_{n1} N	R_{n2} N	n_2 min^{-1}	M_{n2} Nm	P_{n1} kW	R_{n1} N	R_{n2} N	
C 61 2_2.8	2.8	1000	445	49	—	4670	500	550	30	770	5930	
C 61 2_3.7	3.7	757	530	44	—	4950	378	575	24	1730	6600	
C 61 2_4.6	4.6	609	575	39	—	5280	304	600	20	2150	7130	
C 61 2_6.0	6.0	467	575	30	—	6000	233	625	16.1	2700	7950	
C 61 2_6.7	6.7	418	900	41	2230	5600	209	1130	26	2850	7060	
C 61 2_7.5	7.5	373	1000	41	2220	5620	187	1250	26	2900	7110	
C 61 2_8.8	8.8	318	1000	35	2290	6080	159	1250	22	2980	7690	
C 61 2_9.8	9.8	286	1100	35	2380	6140	143	1350	21	3330	7850	
C 61 2_10.9	10.9	257	1050	30	2530	6590	128	1350	19.1	2940	8210	
C 61 2_12.1	12.1	231	1150	29	2670	6670	116	1350	17.2	3600	8730	
C 61 2_14.3	14.3	196	1150	25	2450	7220	98	1350	14.6	3590	9430	
C 61 2_15.9	15.9	176	1250	24	2660	7350	88	1350	13.1	3780	9990	
C 61 2_17.7	17.7	158	1200	21	2540	7850	79	1350	11.8	3700	10400	
C 61 2_19.6	19.6	143	1300	20	2780	8000	71	1350	10.6	3890	11000	
C 61 2_22.4	22.4	125	1250	17.2	2630	8650	63	1350	9.3	3810	11600	
C 61 2_24.8	24.8	113	1350	16.8	2840	8840	56	1350	8.4	3980	12300	
C 61 2_27.4	27.4	102	1300	14.6	2600	9390	51	1350	7.6	3880	12800	
C 61 2_30.4	30.4	92	1350	13.7	2900	9770	46	1350	6.9	4050	13500	
C 61 2_34.2	34.2	82	1165	10.5	3020	10900	41	1225	5.5	4090	14500	
C 61 2_38.0	38.0	74	1280	10.4	3030	11100	37	1350	5.5	4100	14800	
C 61 3_26.8	26.8	104	1140	13.4	3740	9810	52	1435	8.4	4700	12400	
C 61 3_29.4	29.4	95	1160	12.4	3780	10200	48	1465	7.9	4700	12900	
C 61 3_33.0	33.0	85	1210	11.6	3750	10600	42	1525	7.3	4700	13300	
C 61 3_36.1	36.1	78	1235	10.8	3800	11000	39	1555	6.8	4700	13800	
C 61 3_43.4	43.4	65	1315	9.6	3760	11600	32	1600	5.8	4700	14800	
C 61 3_47.6	47.6	59	1340	8.9	3810	12100	29.4	1600	5.3	4700	15500	
C 61 3_53.5	53.5	52	1400	8.2	3760	12500	26.2	1600	4.7	4700	16000	149
C 61 3_58.6	58.6	48	1430	7.7	3810	13000	23.9	1600	4.3	4700	16000	
C 61 3_67.7	67.7	41	1505	7.0	3750	13500	20.7	1600	3.7	4700	16000	
C 61 3_74.2	74.2	38	1535	6.5	3800	14100	18.9	1600	3.4	4700	16000	
C 61 3_83.0	83.0	34	1600	6.1	3740	14500	16.9	1600	3.0	4700	16000	
C 61 3_91.0	91.0	31	1600	5.5	3800	15200	15.4	1600	2.8	4700	16000	
C 61 3_103.6	103.6	27.0	1600	4.9	3760	16000	13.5	1600	2.4	4700	16000	
C 61 3_113.6	113.6	24.6	1600	4.4	3820	16000	12.3	1600	2.2	4700	16000	
C 61 3_128.1	128.1	21.9	1600	3.9	3790	16000	10.9	1600	2.0	4700	16000	
C 61 3_140.5	140.5	19.9	1600	3.6	3840	16000	10.0	1600	1.8	4700	16000	
C 61 3_150.0	150.0	18.7	1600	3.4	3800	16000	9.3	1600	1.7	4700	16000	
C 61 3_164.5	164.5	17.0	1600	3.1	3850	16000	8.5	1600	1.5	4700	16000	
C 61 3_178.6	178.6	15.7	1600	2.8	3800	16000	7.8	1600	1.4	4700	16000	
C 61 3_195.8	195.8	14.3	1600	2.6	3860	16000	7.2	1600	1.3	4700	16000	
C 61 4_217.4	217.4	12.9	1600	2.4	3020	16000	6.4	1600	1.2	3500	16000	
C 61 4_238.3	238.3	11.7	1600	2.2	3060	16000	5.9	1600	1.1	3500	16000	
C 61 4_275.3	275.3	10.2	1600	1.9	3100	16000	5.1	1600	0.94	3500	16000	
C 61 4_301.7	301.7	9.3	1600	1.7	3130	16000	4.6	1600	0.85	3500	16000	
C 61 4_337.7	337.7	8.3	1600	1.5	3160	16000	4.1	1600	0.76	3500	16000	
C 61 4_370.1	370.1	7.6	1600	1.4	3180	16000	3.8	1600	0.70	3500	16000	
C 61 4_421.5	421.5	6.6	1600	1.2	3200	16000	3.3	1600	0.61	3500	16000	
C 61 4_462.0	462.0	6.1	1600	1.1	3220	16000	3.0	1600	0.56	3500	16000	
C 61 4_521.1	521.1	5.4	1600	0.99	3240	16000	2.7	1600	0.49	3500	16000	
C 61 4_571.2	571.2	4.9	1600	0.90	3250	16000	2.5	1600	0.45	3500	16000	
C 61 4_610.1	610.1	4.6	1600	0.84	3260	16000	2.3	1600	0.42	3500	16000	
C 61 4_668.8	668.8	4.2	1600	0.77	3280	16000	2.1	1600	0.39	3500	16000	
C 61 4_726.3	726.3	3.9	1600	0.71	3290	16000	1.9	1600	0.35	3500	16000	
C 61 4_796.1	796.1	3.5	1600	0.65	3300	16000	1.8	1600	0.32	3500	16000	

(—) 请联系我们的技术部门并告知径向负载信息 (转向, 力的方向, 位置)

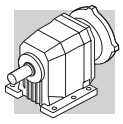

C 61 — 1600 Nm

	i	n_1 = 900 min^{-1}					n_1 = 500 min^{-1}					
		n_2 min^{-1}	M_{n2} Nm	P_{n1} kW	R_{n1} N	R_{n2} N	n_2 min^{-1}	M_{n2} Nm	P_{n1} kW	R_{n1} N	R_{n2} N	
C 61 2_2.8	2.8	321	565	20	2840	7150	179	665	13.1	4050	8790	
C 61 2_3.7	3.7	243	625	16.8	3000	7800	135	665	9.9	4700	9860	
C 61 2_4.6	4.6	196	665	14.3	3170	8380	109	665	8.0	4700	10760	
C 61 2_6.0	6.0	150	665	11.0	4120	9440	83	665	6.1	4700	12000	
C 61 2_6.7	6.7	134	1350	20	2850	8050	75	1350	11.1	4700	10800	
C 61 2_7.5	7.5	120	1350	17.9	4010	8560	67	1350	9.9	4700	11400	
C 61 2_8.8	8.8	102	1350	15.2	4070	9240	57	1350	8.5	4700	12200	
C 61 2_9.8	9.8	92	1350	13.7	4310	9790	51	1350	7.6	4700	12900	
C 61 2_10.9	10.9	83	1350	12.3	4270	10200	46	1350	6.8	4700	13400	
C 61 2_12.1	12.1	74	1350	11.1	4480	10800	41	1350	6.1	4700	14100	
C 61 2_14.3	14.3	63	1350	9.4	4470	11600	35	1350	5.2	4700	15100	
C 61 2_15.9	15.9	57	1350	8.4	4660	12300	31	1350	4.7	4700	15900	
C 61 2_17.7	17.7	51	1350	7.6	4580	12800	28.2	1350	4.2	4700	16000	
C 61 2_19.6	19.6	46	1350	6.8	4700	13500	25.5	1350	3.8	4700	16000	
C 61 2_22.4	22.4	40	1350	6.0	4690	14200	22.3	1350	3.3	4700	16000	
C 61 2_24.8	24.8	36	1350	5.4	4700	14900	20.2	1350	3.0	4700	16000	
C 61 2_27.4	27.4	33	1350	4.9	4700	15500	18.2	1350	2.7	4700	16000	
C 61 2_30.4	30.4	29.6	1350	4.4	4700	16000	16.4	1350	2.4	4700	16000	
C 61 2_34.2	34.2	26.3	1265	3.7	4700	16000	14.6	1325	2.1	4700	16000	
C 61 2_38.0	38.0	23.7	1350	3.5	4700	16000	13.2	1350	2.0	4700	16000	
C 61 3_26.8	26.8	34	1600	6.0	4700	14500	18.7	1600	3.4	4700	16000	
C 61 3_29.4	29.4	31	1600	5.5	4700	15200	17.0	1600	3.1	4700	16000	
C 61 3_33.0	33.0	27.3	1600	4.9	4700	15900	15.2	1600	2.7	4700	16000	
C 61 3_36.1	36.1	24.9	1600	4.5	4700	16000	13.9	1600	2.5	4700	16000	
C 61 3_43.4	43.4	20.7	1600	3.7	4700	16000	11.5	1600	2.1	4700	16000	
C 61 3_47.6	47.6	18.9	1600	3.4	4700	16000	10.5	1600	1.9	4700	16000	
C 61 3_53.5	53.5	16.8	1600	3.0	4700	16000	9.3	1600	1.7	4700	16000	
C 61 3_58.6	58.6	15.4	1600	2.8	4700	16000	8.5	1600	1.5	4700	16000	149
C 61 3_67.7	67.7	13.3	1600	2.4	4700	16000	7.4	1600	1.3	4700	16000	
C 61 3_74.2	74.2	12.1	1600	2.2	4700	16000	6.7	1600	1.2	4700	16000	
C 61 3_83.0	83.0	10.8	1600	2.0	4700	16000	6.0	1600	1.1	4700	16000	
C 61 3_91.0	91.0	9.9	1600	1.8	4700	16000	5.5	1600	0.99	4700	16000	
C 61 3_103.6	103.6	8.7	1600	1.6	4700	16000	4.8	1600	0.87	4700	16000	
C 61 3_113.6	113.6	7.9	1600	1.4	4700	16000	4.4	1600	0.79	4700	16000	
C 61 3_128.1	128.1	7.0	1600	1.3	4700	16000	3.9	1600	0.70	4700	16000	
C 61 3_140.5	140.5	6.4	1600	1.2	4700	16000	3.6	1600	0.64	4700	16000	
C 61 3_150.0	150.0	6.0	1600	1.1	4700	16000	3.3	1600	0.60	4700	16000	
C 61 3_164.5	164.5	5.5	1600	0.99	4700	16000	3.0	1600	0.55	4700	16000	
C 61 3_178.6	178.6	5.0	1600	0.91	4700	16000	2.8	1600	0.50	4700	16000	
C 61 3_195.8	195.8	4.6	1600	0.83	4700	16000	2.6	1600	0.46	4700	16000	
C 61 4_217.4	217.4	4.1	1600	0.76	3500	16000	2.3	1600	0.42	3500	16000	
C 61 4_238.3	238.3	3.8	1600	0.70	3500	16000	2.1	1600	0.39	3500	16000	
C 61 4_275.3	275.3	3.3	1600	0.60	3500	16000	1.8	1600	0.33	3500	16000	
C 61 4_301.7	301.7	3.0	1600	0.55	3500	16000	1.7	1600	0.31	3500	16000	
C 61 4_337.7	337.7	2.7	1600	0.49	3500	16000	1.5	1600	0.27	3500	16000	
C 61 4_370.1	370.1	2.4	1600	0.45	3500	16000	1.4	1600	0.25	3500	16000	
C 61 4_421.5	421.5	2.1	1600	0.39	3500	16000	1.2	1600	0.22	3500	16000	
C 61 4_462.0	462.0	1.9	1600	0.36	3500	16000	1.1	1600	0.20	3500	16000	
C 61 4_521.1	521.1	1.7	1600	0.32	3500	16000	1.0	1600	0.18	3500	16000	
C 61 4_571.2	571.2	1.6	1600	0.29	3500	16000	0.88	1600	0.16	3500	16000	
C 61 4_610.1	610.1	1.5	1600	0.27	3500	16000	0.82	1600	0.15	3500	16000	
C 61 4_668.8	668.8	1.3	1600	0.25	3500	16000	0.75	1600	0.14	3500	16000	
C 61 4_726.3	726.3	1.2	1600	0.23	3500	16000	0.69	1600	0.13	3500	16000	
C 61 4_796.1	796.1	1.1	1600	0.21	3500	16000	0.63	1600	0.12	3500	16000	

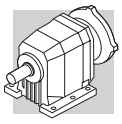

C 70 — 2300 Nm

	i	n_1 = 2800 min^{-1}					n_1 = 1400 min^{-1}					
		n_2 min^{-1}	M_{n2} Nm	P_{n1} kW	R_{n1} N	R_{n2} N	n_2 min^{-1}	M_{n2} Nm	P_{n1} kW	R_{n1} N	R_{n2} N	
C 70 2_4.6	4.6	613	1400	95	—	5590	306	1700	57	—	7100	
C 70 2_5.9	5.9	479	1550	82	—	5610	239	1900	50	—	6990	
C 70 2_6.3	6.3	448	1600	79	1980	6570	224	1950	48	2630	8250	
C 70 2_7.5	7.5	375	1550	64	—	7130	188	1950	40	—	8400	
C 70 2_8.0	8.0	350	1750	68	1760	6840	175	2100	41	2670	8880	
C 70 2_9.5	9.5	294	1600	52	770	8260	147	2000	32	620	9910	
C 70 2_10.2	10.2	274	1900	57	2000	7200	137	2100	32	4470	10800	
C 70 2_11.2	11.2	250	1600	44	1130	9350	125	2000	28	1070	11300	
C 70 2_13.0	13.0	215	2050	49	1860	7700	107	2100	25	5600	12900	
C 70 2_14.1	14.1	199	1700	37	1100	10100	99	2100	23	1280	12400	
C 70 2_15.3	15.3	183	2100	42	1810	8540	91	2100	21	5860	14300	
C 70 2_16.7	16.7	168	1700	31	1570	11400	84	2050	18.9	2350	14300	
C 70 2_19.3	19.3	145	2100	34	2730	10400	73	2100	16.8	6000	16300	
C 70 2_22.9	22.9	123	2100	28	3160	11800	61	2100	14.2	6060	18000	
C 70 2_27.7	27.7	101	2100	23	3570	13400	51	2100	11.7	6120	19900	
C 70 2_34.7	34.7	81	2100	18.7	3960	15400	40	2100	9.3	6180	22200	
C 70 3_41.3	41.3	68	1900	14.5	5670	18400	34	2300	8.8	7000	22800	
C 70 3_44.7	44.7	63	1900	13.4	5700	19100	31	2300	8.1	7000	23800	
C 70 3_52.2	52.2	54	2050	12.4	5680	19600	26.8	2300	7.0	7000	25000	
C 70 3_56.5	56.5	50	2050	11.4	5710	20400	24.8	2300	6.4	7000	25000	
C 70 3_65.9	65.9	43	2200	10.5	5670	21000	21.3	2300	5.5	7000	25000	
C 70 3_71.3	71.3	39	2200	9.7	5710	21900	19.6	2300	5.1	7000	25000	
C 70 3_81.4	81.4	34	2300	8.9	5680	22700	17.2	2300	4.5	7000	25000	
C 70 3_88.2	88.2	32	2300	8.2	5710	23600	15.9	2300	4.1	7000	25000	
C 70 3_103.8	103.8	27.0	2300	7.0	5700	25000	13.5	2300	3.5	7000	25000	
C 70 3_112.4	112.4	24.9	2300	6.4	5740	25000	12.5	2300	3.2	7000	25000	152
C 70 3_126.8	126.8	22.1	2300	5.7	5720	25000	11.0	2300	2.9	7000	25000	
C 70 3_137.4	137.4	20.4	2300	5.3	5750	25000	10.2	2300	2.6	7000	25000	
C 70 3_150.3	150.3	18.6	2300	4.8	5730	25000	9.3	2300	2.4	7000	25000	
C 70 3_162.8	162.8	17.2	2300	4.5	5760	25000	8.6	2300	2.2	7000	25000	
C 70 3_179.2	179.2	15.6	2300	4.0	5740	25000	7.8	2300	2.0	7000	25000	
C 70 3_194.1	194.1	14.4	2300	3.7	5770	25000	7.2	2300	1.9	7000	25000	
C 70 3_220.9	220.9	12.7	2250	3.2	5750	25000	6.3	2250	1.6	7000	25000	
C 70 3_239.3	239.3	11.7	2300	3.0	5770	25000	5.8	2300	1.5	7000	25000	
C 70 4_251.3	251.3	11.1	2300	2.9	2000	25000	5.6	2300	1.5	2620	25000	
C 70 4_272.2	272.2	10.3	2300	2.7	2030	25000	5.1	2300	1.4	2650	25000	
C 70 4_317.9	317.9	8.8	2300	2.3	2030	25000	4.4	2300	1.2	2650	25000	
C 70 4_344.3	344.3	8.1	2300	2.2	2050	25000	4.1	2300	1.1	2670	25000	
C 70 4_409.4	409.4	6.8	2300	1.8	2050	25000	3.4	2300	0.90	2670	25000	
C 70 4_443.5	443.5	6.3	2300	1.7	2070	25000	3.2	2300	0.80	2700	25000	
C 70 4_512.0	512.0	5.5	2300	1.4	2070	25000	2.7	2300	0.70	2680	25000	
C 70 4_554.7	554.7	5.0	2300	1.3	2090	25000	2.5	2300	0.70	2710	25000	
C 70 4_606.8	606.8	4.6	2300	1.2	2080	25000	2.3	2300	0.60	2700	25000	
C 70 4_657.3	657.3	4.3	2300	1.1	2100	25000	2.1	2300	0.60	2720	25000	
C 70 4_736.0	736.0	3.8	2300	1.0	2090	25000	1.9	2300	0.50	2700	25000	
C 70 4_797.3	797.3	3.5	2300	0.90	2110	25000	1.8	2300	0.50	2720	25000	
C 70 4_922.6	922.6	3.0	2300	0.80	2100	25000	1.5	2300	0.40	2710	25000	
C 70 4_999.5	999.5	2.8	2300	0.70	2110	25000	1.4	2300	0.40	2730	25000	
C 70 4_1069	1069	2.6	2300	0.70	2100	25000	1.3	2300	0.30	2720	25000	
C 70 4_1158	1158	2.4	2300	0.60	2100	25000	1.2	2300	0.30	2800	25000	
C 70 4_1362	1362	2.1	2300	0.50	2100	25000	1.0	2300	0.30	2800	25000	
C 70 4_1476	1476	1.9	2300	0.50	2100	25000	0.90	2300	0.30	2800	25000	

(—) 请联系我们的技术部门并告知径向负载信息 (转向, 力的方向, 位置)

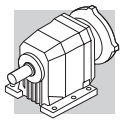

C 70 — 2300 Nm

	i	n_1 = 900 min^{-1}					n_1 = 500 min^{-1}					
		n_2 min^{-1}	M_{n2} Nm	P_{n1} kW	R_{n1} N	R_{n2} N	n_2 min^{-1}	M_{n2} Nm	P_{n1} kW	R_{n1} N	R_{n2} N	
C 70 2_4.6	4.6	197	1800	39	650	9360	109	1800	22	5500	13900	
C 70 2_5.9	5.9	154	1950	33	560	9980	85	2150	20	2890	13400	
C 70 2_6.3	6.3	144	2100	33	4260	10400	80	2100	18.5	7000	15500	
C 70 2_7.5	7.5	121	2100	28	1120	10800	67	2150	15.9	5400	15600	
C 70 2_8.0	8.0	113	2100	26	5800	12500	63	2100	14.5	7000	17800	
C 70 2_9.5	9.5	95	2150	22	2140	12400	53	2150	12.4	6990	18100	
C 70 2_10.2	10.2	88	2100	20	6870	14600	49	2100	11.3	7000	20200	
C 70 2_11.2	11.2	80	2150	19.0	2620	14000	45	2150	10.6	7000	19800	
C 70 2_13.0	13.0	69	2100	16.0	7000	16900	38	2100	8.9	7000	22800	
C 70 2_14.1	14.1	64	2150	15.1	3900	16000	35	2150	8.4	7000	22300	
C 70 2_15.3	15.3	59	2100	13.6	7000	18400	33	2100	7.5	7000	24600	
C 70 2_16.7	16.7	54	2050	12.2	5470	18500	29.9	2050	6.8	7000	25000	
C 70 2_19.3	19.3	47	2100	10.8	7000	20700	25.9	2100	6.0	7000	25000	
C 70 2_22.9	22.9	39	2100	9.1	7000	22500	21.9	2100	5.1	7000	25000	
C 70 2_27.7	27.7	32	2100	7.5	7000	24600	18.0	2100	4.2	7000	25000	
C 70 2_34.7	34.7	25.9	2100	6.0	7000	25000	14.4	2100	3.3	7000	25000	
C 70 3_41.3	41.3	21.8	2300	5.6	7000	25000	12.1	2300	3.1	7000	25000	
C 70 3_44.7	44.7	20.1	2300	5.2	7000	25000	11.2	2300	2.9	7000	25000	
C 70 3_52.2	52.2	17.3	2300	4.5	7000	25000	9.6	2300	2.5	7000	25000	
C 70 3_56.5	56.5	15.9	2300	4.1	7000	25000	8.8	2300	2.3	7000	25000	
C 70 3_65.9	65.9	13.7	2300	3.5	7000	25000	7.6	2300	2.0	7000	25000	
C 70 3_71.3	71.3	12.6	2300	3.3	7000	25000	7.0	2300	1.8	7000	25000	
C 70 3_81.4	81.4	11.1	2300	2.9	7000	25000	6.1	2300	1.6	7000	25000	
C 70 3_88.2	88.2	10.2	2300	2.6	7000	25000	5.7	2300	1.5	7000	25000	
C 70 3_103.8	103.8	8.7	2300	2.2	7000	25000	4.8	2300	1.2	7000	25000	
C 70 3_112.4	112.4	8.0	2300	2.1	7000	25000	4.4	2300	1.2	7000	25000	152
C 70 3_126.8	126.8	7.1	2300	1.8	7000	25000	3.9	2300	1.0	7000	25000	
C 70 3_137.4	137.4	6.6	2300	1.7	7000	25000	3.6	2300	0.90	7000	25000	
C 70 3_150.3	150.3	6.0	2300	1.6	7000	25000	3.3	2300	0.90	7000	25000	
C 70 3_162.8	162.8	5.5	2300	1.4	7000	25000	3.1	2300	0.80	7000	25000	
C 70 3_179.2	179.2	5.0	2300	1.3	7000	25000	2.8	2300	0.70	7000	25000	
C 70 3_194.1	194.1	4.6	2300	1.2	7000	25000	2.6	2300	0.70	7000	25000	
C 70 3_220.9	220.9	4.1	2250	1.0	7000	25000	2.3	2250	0.60	7000	25000	
C 70 3_239.3	239.3	3.8	2300	1.0	7000	25000	2.1	2300	0.50	7000	25000	
C 70 4_251.3	251.3	3.6	2300	0.90	2000	25000	2.0	2300	0.50	2620	25000	
C 70 4_272.2	272.2	3.3	2300	0.90	2030	25000	1.8	2300	0.50	2650	25000	
C 70 4_317.9	317.9	2.8	2300	0.70	2030	25000	1.6	2300	0.40	2650	25000	
C 70 4_344.3	344.3	2.6	2300	0.70	2050	25000	1.5	2300	0.40	2670	25000	
C 70 4_409.4	409.4	2.2	2300	0.60	2050	25000	1.2	2300	0.30	2670	25000	
C 70 4_443.5	443.5	2.0	2300	0.50	2070	25000	1.1	2300	0.30	2700	25000	
C 70 4_512.0	512.0	1.8	2300	0.50	2070	25000	1.0	2300	0.30	2680	25000	
C 70 4_554.7	554.7	1.6	2300	0.40	2090	25000	0.90	2300	0.20	2710	25000	
C 70 4_606.8	606.8	1.5	2300	0.40	2080	25000	0.80	2300	0.20	2700	25000	
C 70 4_657.3	657.3	1.4	2300	0.40	2100	25000	0.80	2300	0.20	2720	25000	
C 70 4_736.0	736.0	1.2	2300	0.30	2090	25000	0.70	2300	0.20	2700	25000	
C 70 4_797.3	797.3	1.1	2300	0.30	2110	25000	0.60	2300	0.20	2720	25000	
C 70 4_922.6	922.6	1.0	2300	0.30	2100	25000	0.50	2300	0.10	2710	25000	
C 70 4_999.5	999.5	0.90	2300	0.20	2110	25000	0.50	2300	0.10	2730	25000	
C 70 4_1069	1069	0.80	2300	0.20	2100	25000	0.50	2300	0.10	2720	25000	
C 70 4_1158	1158	0.80	2300	0.20	2100	25000	0.40	2300	0.10	2800	25000	
C 70 4_1362	1362	0.70	2300	0.20	2100	25000	0.40	2300	0.10	2800	25000	
C 70 4_1476	1476	0.60	2300	0.20	2100	25000	0.30	2300	0.10	2800	25000	

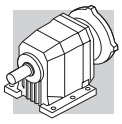

C 80 — 4000 Nm

	i	n_1 = 2800 min^{-1}					n_1 = 1400 min^{-1}					
		n_2 min^{-1}	M_{n2} Nm	P_{n1} kW	R_{n1} N	R_{n2} N	n_2 min^{-1}	M_{n2} Nm	P_{n1} kW	R_{n1} N	R_{n2} N	
C 80 2_5.6	5.6	496	2400	131	370	10900	248	3100	85	690	12300	
C 80 2_6.1	6.1	458	2450	124	890	11000	229	3150	80	1380	12700	
C 80 2_7.0	7.0	398	2650	116	350	11000	199	3350	73	910	12900	
C 80 2_7.6	7.6	367	2700	109	890	11300	183	3400	69	1600	13300	
C 80 2_8.9	8.9	316	2800	98	420	12100	158	3500	61	1120	14500	
C 80 2_9.6	9.6	292	3000	96	520	11300	146	3700	59	1380	13900	
C 80 2_11.1	11.1	252	2800	78	1110	14200	126	3500	49	1950	17100	
C 80 2_12.0	12.0	233	3000	77	1200	13500	116	3700	48	2190	16600	
C 80 2_13.8	13.8	203	2800	63	1420	16400	102	3500	39	2330	19800	
C 80 2_14.9	14.9	188	3000	62	1510	15800	94	3700	38	2560	19300	
C 80 2_16.7	16.7	168	2800	52	1840	18500	84	3500	32	2840	22300	
C 80 2_18.1	18.1	155	3000	50	1930	17900	78	3700	32	3060	22000	
C 80 2_20.5	20.5	136	2850	43	2000	20500	68	3550	27	3060	24800	
C 80 2_22.2	22.2	126	3000	42	2210	20300	63	3700	26	3400	24900	
C 80 2_24.0	24.0	117	2850	37	2090	22400	58	3550	23	3180	27000	
C 80 2_25.9	25.9	108	3000	36	2300	22300	54	3700	22	3510	27200	
C 80 2_31.3	31.3	89	3000	30	2480	24700	45	3700	18.2	3730	30000	
C 80 2_39.1	39.1	72	2500	19.7	3820	31000	36	3200	12.6	5060	35000	
C 80 3_43.5	43.5	64	3100	23	5610	28700	32	3800	13.8	7000	34800	
C 80 3_47.4	47.4	59	3100	21	5660	30000	29.5	3800	12.6	7000	35000	
C 80 3_57.3	57.3	49	3400	18.7	5620	30500	24.4	4000	11.0	7000	35000	
C 80 3_62.5	62.5	45	3400	17.1	5670	31800	22.4	4000	10.1	7000	35000	
C 80 3_70.5	70.5	40	3650	16.3	5620	32200	19.9	4000	8.9	7000	35000	
C 80 3_76.9	76.9	36	3600	14.8	5670	33900	18.2	4000	8.2	7000	35000	
C 80 3_89.3	89.3	31	3900	13.8	5620	34700	15.7	4000	7.1	7000	35000	
C 80 3_97.4	97.4	28.7	3900	12.6	5670	35000	14.4	4000	6.5	7000	35000	
C 80 3_109.5	109.5	25.5	4000	11.5	5630	35000	12.8	4000	5.8	7000	35000	155
C 80 3_119.5	119.5	23.4	4000	10.6	5680	35000	11.7	4000	5.3	7000	35000	
C 80 3_136.7	136.7	20.5	4000	9.2	5660	35000	10.2	4000	4.6	7000	35000	
C 80 3_149.1	149.1	18.8	4000	8.5	5700	35000	9.4	4000	4.2	7000	35000	
C 80 3_169.0	169.0	16.6	4000	7.5	5680	35000	8.3	4000	3.7	7000	35000	
C 80 3_184.4	184.4	15.2	4000	6.8	5720	35000	7.6	4000	3.4	7000	35000	
C 80 3_197.9	197.9	14.2	3800	6.1	5710	35000	7.1	3800	3.0	7000	35000	
C 80 3_215.8	215.8	13.0	4000	5.8	5730	35000	6.5	4000	2.9	7000	35000	
C 80 4_261.9	261.9	10.7	4000	4.9	1850	35000	5.3	4000	2.5	2470	35000	
C 80 4_285.7	285.7	9.8	4000	4.5	1890	35000	4.9	4000	2.3	2510	35000	
C 80 4_334.3	334.3	8.4	4000	3.9	1880	35000	4.2	4000	1.9	2500	35000	
C 80 4_364.7	364.7	7.7	4000	3.5	1920	35000	3.8	4000	1.8	2540	35000	
C 80 4_417.5	417.5	6.7	4000	3.1	1910	35000	3.4	4000	1.5	2530	35000	
C 80 4_455.4	455.4	6.1	4000	2.8	1950	35000	3.1	4000	1.4	2570	35000	
C 80 4_529.3	529.3	5.3	4000	2.4	1940	35000	2.6	4000	1.2	2550	35000	
C 80 4_577.4	577.4	4.8	4000	2.2	1970	35000	2.4	4000	1.1	2590	35000	
C 80 4_664.3	664.3	4.2	4000	1.9	1960	35000	2.1	4000	1.0	2570	35000	
C 80 4_724.7	724.7	3.9	4000	1.8	1990	35000	1.9	4000	0.90	2610	35000	
C 80 4_783.4	783.4	3.6	4000	1.6	1970	35000	1.8	4000	0.80	2590	35000	
C 80 4_854.6	854.6	3.3	4000	1.5	2000	35000	1.6	4000	0.80	2620	35000	
C 80 4_945.7	945.7	3.0	4000	1.4	1980	35000	1.5	4000	0.70	2600	35000	
C 80 4_1032	1032	2.7	4000	1.2	2010	35000	1.4	4000	0.60	2630	35000	
C 80 4_1168	1168	2.4	4000	1.1	1980	35000	1.2	4000	0.60	2600	35000	
C 80 4_1274	1274	2.2	4000	1.0	2020	35000	1.1	4000	0.50	2640	35000	
C 80 4_1358	1358	2.1	4000	0.90	1990	35000	1.0	4000	0.50	2610	35000	
C 80 4_1481	1481	1.9	4000	0.90	2030	35000	0.90	4000	0.40	2640	35000	

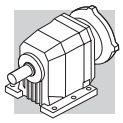

C 80 — 4000 Nm

	i	n_1 = 900 min^{-1}					n_1 = 500 min^{-1}					
		n_2 min^{-1}	M_{n2} Nm	P_{n1} kW	R_{n1} N	R_{n2} N	n_2 min^{-1}	M_{n2} Nm	P_{n1} kW	R_{n1} N	R_{n2} N	
C 80 2_5.6	5.6	160	3500	62	1480	14400	89	3500	34	4970	21600	155
C 80 2_6.1	6.1	147	3600	58	2100	14400	82	3700	33	5270	21200	
C 80 2_7.0	7.0	128	3500	49	2630	17000	71	3500	27	6130	24600	
C 80 2_7.6	7.6	118	3650	47	3060	16800	66	3650	26	6550	24600	
C 80 2_8.9	8.9	102	3500	39	3330	19900	56	3500	22	6800	27800	
C 80 2_9.6	9.6	94	3700	38	3590	19400	52	3700	21	7000	27700	
C 80 2_11.1	11.1	81	3500	31	4160	22800	45	3500	17.4	7000	31200	
C 80 2_12.0	12.0	75	3700	31	4400	22500	42	3700	17.0	7000	31200	
C 80 2_13.8	13.8	65	3500	25	4540	25700	36	3500	14.0	7000	34700	
C 80 2_14.9	14.9	60	3700	25	4770	25500	34	3700	13.7	7000	34700	
C 80 2_16.7	16.7	54	3500	21	5050	28500	30	3500	11.6	7000	35000	
C 80 2_18.1	18.1	50	3700	20	5280	28400	27.7	3700	11.3	7000	35000	
C 80 2_20.5	20.5	44	3550	17.2	5270	31400	24.4	3550	9.5	7000	35000	
C 80 2_22.2	22.2	40	3700	16.5	5610	31600	22.5	3700	9.2	7000	35000	
C 80 2_24.0	24.0	38	3550	14.7	5390	33800	20.9	3550	8.2	7000	35000	
C 80 2_25.9	25.9	35	3700	14.1	5730	34200	19.3	3700	7.9	7000	35000	
C 80 2_31.3	31.3	28.7	3700	11.7	5940	35000	16.0	3700	6.5	7000	35000	
C 80 2_39.1	39.1	23.0	3200	8.1	7000	35000	12.8	3200	4.5	7000	35000	
C 80 3_43.5	43.5	20.7	4000	9.3	7000	35000	11.5	4000	5.2	7000	35000	
C 80 3_47.4	47.4	19.0	4000	8.5	7000	35000	10.5	4000	4.7	7000	35000	
C 80 3_57.3	57.3	15.7	4000	7.1	7000	35000	8.7	4000	3.9	7000	35000	
C 80 3_62.5	62.5	14.4	4000	6.5	7000	35000	8.0	4000	3.6	7000	35000	
C 80 3_70.5	70.5	12.8	4000	5.7	7000	35000	7.1	4000	3.2	7000	35000	
C 80 3_76.9	76.9	11.7	4000	5.3	7000	35000	6.5	4000	2.9	7000	35000	
C 80 3_89.3	89.3	10.1	4000	4.5	7000	35000	5.6	4000	2.5	7000	35000	
C 80 3_97.4	97.4	9.2	4000	4.2	7000	35000	5.1	4000	2.3	7000	35000	
C 80 3_109.5	109.5	8.2	4000	3.7	7000	35000	4.6	4000	2.1	7000	35000	
C 80 3_119.5	119.5	7.5	4000	3.4	7000	35000	4.2	4000	1.9	7000	35000	
C 80 3_136.7	136.7	6.6	4000	3.0	7000	35000	3.7	4000	1.6	7000	35000	
C 80 3_149.1	149.1	6.0	4000	2.7	7000	35000	3.4	4000	1.5	7000	35000	
C 80 3_169.0	169.0	5.3	4000	2.4	7000	35000	3.0	4000	1.3	7000	35000	
C 80 3_184.4	184.4	4.9	4000	2.2	7000	35000	2.7	4000	1.2	7000	35000	
C 80 3_197.9	197.9	4.5	3800	1.9	7000	35000	2.5	3800	1.1	7000	35000	
C 80 3_215.8	215.8	4.2	4000	1.9	7000	35000	2.3	4000	1.0	7000	35000	
C 80 4_261.9	261.9	3.4	4000	1.6	2950	35000	1.9	4000	0.90	3500	35000	
C 80 4_285.7	285.7	3.2	4000	1.4	2990	35000	1.8	4000	0.80	3500	35000	
C 80 4_334.3	334.3	2.7	4000	1.2	2980	35000	1.5	4000	0.70	3500	35000	
C 80 4_364.7	364.7	2.5	4000	1.1	3020	35000	1.4	4000	0.60	3500	35000	
C 80 4_417.5	417.5	2.2	4000	1.0	3000	35000	1.2	4000	0.60	3500	35000	
C 80 4_455.4	455.4	2.0	4000	0.90	3050	35000	1.1	4000	0.50	3500	35000	
C 80 4_529.3	529.3	1.7	4000	0.80	3030	35000	0.90	4000	0.40	3500	35000	
C 80 4_577.4	577.4	1.6	4000	0.70	3070	35000	0.90	4000	0.40	3500	35000	
C 80 4_664.3	664.3	1.4	4000	0.60	3050	35000	0.80	4000	0.30	3500	35000	
C 80 4_724.7	724.7	1.2	4000	0.60	3090	35000	0.70	4000	0.30	3500	35000	
C 80 4_783.4	783.4	1.1	4000	0.50	3060	35000	0.60	4000	0.30	3500	35000	
C 80 4_854.6	854.6	1.1	4000	0.50	3100	35000	0.60	4000	0.30	3500	35000	
C 80 4_945.7	945.7	1.0	4000	0.40	3070	35000	0.50	4000	0.20	3500	35000	
C 80 4_1032	1032	0.90	4000	0.40	3110	35000	0.50	4000	0.20	3500	35000	
C 80 4_1168	1168	0.80	4000	0.40	3080	35000	0.40	4000	0.20	3500	35000	
C 80 4_1274	1274	0.70	4000	0.30	3110	35000	0.40	4000	0.20	3500	35000	
C 80 4_1358	1358	0.70	4000	0.30	3090	35000	0.40	4000	0.20	3500	35000	
C 80 4_1481	1481	0.60	4000	0.30	3120	35000	0.30	4000	0.20	3500	35000	

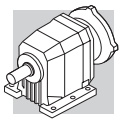

C 90 — 7200 Nm

	i	n_1 = 2800 min^{-1}					n_1 = 1400 min^{-1}					
		n_2 min^{-1}	M_{n2} Nm	P_{n1} kW	R_{n1} N	R_{n2} N	n_2 min^{-1}	M_{n2} Nm	P_{n1} kW	R_{n1} N	R_{n2} N	
C 90 2_5.2	5.2	542	3500	209	1700	12800	271	4300	128	2170	15800	
C 90 2_5.6	5.6	500	3600	198	3240	12800	250	4400	121	4250	16000	
C 90 2_6.8	6.8	414	3850	176	1860	13400	207	4750	108	2210	16400	
C 90 2_7.3	7.3	383	3950	167	3470	13500	191	4850	102	4360	16700	
C 90 2_8.3	8.3	336	4150	154	2010	13800	168	5100	94	2540	17100	
C 90 2_9.0	9.0	310	4250	145	3660	14000	155	5200	89	4720	17500	
C 90 2_10.4	10.4	270	4500	134	990	14200	135	5550	83	1150	17400	
C 90 2_11.2	11.2	249	4600	126	2750	14400	125	5650	78	3460	17800	
C 90 2_12.8	12.8	219	4850	117	580	14700	109	5950	72	840	18200	
C 90 2_13.9	13.9	202	4900	109	2700	15300	101	6050	67	3220	18700	
C 90 2_16.0	16.0	175	5050	98	690	16800	88	6200	60	950	20800	
C 90 2_17.3	17.3	162	5300	94	1670	15900	81	6500	58	2200	19800	
C 90 2_18.7	18.7	150	5050	83	1140	19600	75	6200	51	1500	24300	
C 90 2_20.2	20.2	138	5400	82	1540	17900	69	6600	50	2160	22500	
C 90 2_22.9	22.9	122	5050	68	2110	22400	61	6200	42	2700	27600	
C 90 2_24.8	24.8	113	5400	67	2500	21900	56	6600	41	3340	27300	
C 90 2_27.2	27.2	103	4500	51	6160	26000	52	5500	31	7820	32200	
C 90 2_29.4	29.4	95	4800	50	6560	26000	48	5900	31	8130	32000	
C 90 2_35.1	35.1	80	4400	39	8090	29400	40	5400	24	11100	36300	
C 90 3_39.4	39.4	71	6350	51	10800	23900	36	7100	28	13700	32900	
C 90 3_43.0	43.0	65	6500	48	10800	24700	33	7200	26	13800	34000	
C 90 3_50.3	50.3	56	6800	43	10800	26000	27.8	7100	22	13800	37000	
C 90 3_54.9	54.9	51	7000	40	10900	26500	25.5	7200	21	13900	38300	
C 90 3_59.2	59.2	47	7100	38	10800	27700	23.6	7100	18.9	13900	40000	
C 90 3_64.6	64.6	43	7200	35	10900	29100	21.7	7200	17.6	14000	41300	
C 90 3_74.4	74.4	38	7100	30	10900	31900	18.8	7100	15.0	14000	44400	
C 90 3_81.2	81.2	34	7200	28	10900	33000	17.2	7200	14.0	14100	45900	158
C 90 3_88.2	88.2	32	7100	25	11000	34800	15.9	7100	12.7	14000	47900	
C 90 3_96.2	96.2	29.1	7200	24	11000	35900	14.5	7200	11.8	14100	49400	
C 90 3_107.0	107.0	26.2	7100	21	11000	38100	13.1	7100	10.5	14100	52100	
C 90 3_116.7	116.7	24.0	7200	19.4	11000	39400	12.0	7200	9.7	14100	53700	
C 90 3_134.1	134.1	20.9	7100	16.7	11000	42400	10.4	7100	8.3	14100	57300	
C 90 3_146.3	146.3	19.1	7200	15.5	11000	43800	9.6	7200	7.8	14200	59000	
C 90 3_157.8	157.8	17.7	7100	14.2	11000	45600	8.9	7100	7.1	14100	60000	
C 90 3_172.1	172.1	16.3	7200	13.2	11000	47100	8.1	7200	6.6	14200	60000	
C 90 4_212.4	212.4	13.2	7200	10.9	—	60000	6.6	7200	5.5	1180	60000	
C 90 4_231.7	231.7	12.1	7200	10.0	—	60000	6.0	7200	5.0	1560	60000	
C 90 4_268.5	268.5	10.4	7200	8.6	—	60000	5.2	7200	4.3	1540	60000	
C 90 4_292.9	292.9	9.6	7200	7.9	—	60000	4.8	7200	4.0	1880	60000	
C 90 4_339.0	339.0	8.3	7200	6.8	—	60000	4.1	7200	3.4	1720	60000	
C 90 4_369.8	369.8	7.6	7200	6.3	—	60000	3.8	7200	3.1	2050	60000	
C 90 4_419.0	419.0	6.7	7200	5.5	—	60000	3.3	7200	2.8	1890	60000	
C 90 4_457.1	457.1	6.1	7200	5.1	—	60000	3.1	7200	2.5	2210	60000	
C 90 4_534.2	534.2	5.2	7200	4.3	—	60000	2.6	7200	2.2	2090	60000	
C 90 4_582.8	582.8	4.8	7200	4.0	—	60000	2.4	7200	2.0	2270	60000	
C 90 4_652.8	652.8	4.3	7200	3.6	—	60000	2.1	7200	1.8	2160	60000	
C 90 4_712.2	712.2	3.9	7200	3.3	—	60000	2.0	7200	1.6	2290	60000	
C 90 4_773.6	773.6	3.3	7200	3.0	—	60000	1.8	7200	1.5	2250	60000	
C 90 4_844.0	844.0	3.0	7200	2.7	—	60000	1.7	7200	1.4	2310	60000	
C 90 4_922.3	922.3	2.8	7200	2.5	—	60000	1.5	7200	1.3	2260	60000	
C 90 4_1006	1006	2.5	7200	2.3	—	60000	1.4	7200	1.2	2320	60000	
C 90 4_1137	1137	2.3	7200	2.0	—	60000	1.2	7200	1.0	2270	60000	
C 90 4_1240	1240	2.2	7200	1.9	—	60000	1.1	7200	0.90	2230	60000	

(—) 请联系我们的技术部门并告知径向负载信息 (转向, 力的方向, 位置)

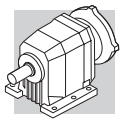

C 90 — 7200 Nm

	i	n_1 = 900 min^{-1}					n_1 = 500 min^{-1}					
		n_2 min^{-1}	M_{n2} Nm	P_{n1} kW	R_{n1} N	R_{n2} N	n_2 min^{-1}	M_{n2} Nm	P_{n1} kW	R_{n1} N	R_{n2} N	
C 90 2_5.2	5.2	174	4900	94	2560	18200	97	5850	62	3010	21600	
C 90 2_5.6	5.6	161	5050	89	4640	18100	89	6000	59	5720	21800	
C 90 2_6.8	6.8	133	5450	80	2310	18500	74	6200	51	5130	24600	
C 90 2_7.3	7.3	123	5550	75	4890	18900	68	6550	49	6340	23200	
C 90 2_8.3	8.3	108	5850	70	2700	19300	60	6200	41	8870	27800	
C 90 2_9.0	9.0	100	5950	65	5300	19800	55	6600	40	9660	27600	
C 90 2_10.4	10.4	87	6200	59	2250	21000	48	6200	33	11000	31000	
C 90 2_11.2	11.2	80	6450	57	3960	20400	45	6600	32	11700	30800	
C 90 2_12.8	12.8	70	6250	48	4500	25300	39	6250	27	13200	34100	
C 90 2_13.9	13.9	65	6550	47	5830	24400	36	6550	26	14600	34300	
C 90 2_16.0	16.0	56	6200	38	6570	28700	31	6200	21	15000	38000	
C 90 2_17.3	17.3	52	6550	38	7530	28600	28.9	6550	21	15000	38100	
C 90 2_18.7	18.7	48	6200	33	7120	31000	26.7	6200	18.3	15000	40700	
C 90 2_20.2	20.2	44	6600	32	7780	30800	24.8	6600	18.0	15000	40700	
C 90 2_22.9	22.9	39	6200	27	8310	34200	21.8	6200	14.9	15000	44500	
C 90 2_24.8	24.8	36	6600	26	8950	34100	20.2	6600	14.6	15000	44600	
C 90 2_27.2	27.2	33	5500	20	13400	39200	18.4	5500	11.2	15000	50000	
C 90 2_29.4	29.4	31	5900	19.9	13700	39100	17.0	5900	11.0	15000	50200	
C 90 2_35.1	35.1	25.6	5400	15.3	14100	43800	14.2	5400	8.5	15000	55500	
C 90 3_39.4	39.4	22.8	7100	18.3	15000	40600	12.7	7100	10.1	15000	40600	
C 90 3_43.0	43.0	20.9	7200	17.0	15000	42000	11.6	7200	9.4	15000	42000	
C 90 3_50.3	50.3	17.9	7100	14.3	15000	45400	9.9	7100	7.9	15000	45400	
C 90 3_54.9	54.9	16.4	7200	13.3	15000	46900	9.1	7200	7.4	15000	46900	
C 90 3_59.2	59.2	15.2	7100	12.2	15000	48800	8.4	7100	6.8	15000	48800	
C 90 3_64.6	64.6	13.9	7200	11.3	15000	50400	7.7	7200	6.3	15000	50400	
C 90 3_74.4	74.4	12.1	7100	9.7	15000	53800	6.7	7100	5.4	15000	53800	
C 90 3_81.2	81.2	11.1	7200	9.0	15000	55500	6.2	7200	5.0	15000	55500	158
C 90 3_88.2	88.2	10.2	7100	8.2	15000	57800	5.7	7100	4.5	15000	57800	
C 90 3_96.2	96.2	9.4	7200	7.6	15000	59600	5.2	7200	4.2	15000	59600	
C 90 3_107.0	107.0	8.4	7100	6.7	15000	60000	4.7	7100	3.7	15000	60000	
C 90 3_116.7	116.7	7.7	7200	6.3	15000	60000	4.3	7200	3.5	15000	60000	
C 90 3_134.1	134.1	6.7	7100	5.4	15000	60000	3.7	7100	3.0	15000	60000	
C 90 3_146.3	146.3	6.2	7200	5.0	15000	60000	3.4	7200	2.8	15000	60000	
C 90 3_157.8	157.8	5.7	7100	4.6	15000	60000	3.2	7100	2.5	15000	60000	
C 90 3_172.1	172.1	5.2	7200	4.2	15000	60000	2.9	7200	2.4	15000	60000	
C 90 4_212.4	212.4	4.2	7200	3.5	2090	60000	2.4	7200	2.0	3210	60000	
C 90 4_231.7	231.7	3.9	7200	3.2	2460	60000	2.2	7200	1.8	3290	60000	
C 90 4_268.5	268.5	3.4	7200	2.8	2440	60000	1.9	7200	1.5	3300	60000	
C 90 4_292.9	292.9	3.1	7200	2.5	2620	60000	1.7	7200	1.4	3370	60000	
C 90 4_339.0	339.0	2.7	7200	2.2	2590	60000	1.5	7200	1.2	3340	60000	
C 90 4_369.8	369.8	2.4	7200	2.0	2660	60000	1.4	7200	1.1	3420	60000	
C 90 4_419.0	419.0	2.1	7200	1.8	2630	60000	1.2	7200	1.0	3390	60000	
C 90 4_457.1	457.1	2.0	7200	1.6	2700	60000	1.1	7200	0.90	3460	60000	
C 90 4_534.2	534.2	1.7	7200	1.4	2680	60000	0.90	7200	0.80	3380	60000	
C 90 4_582.8	582.8	1.5	7200	1.3	2750	60000	0.90	7200	0.70	3500	60000	
C 90 4_652.8	652.8	1.4	7200	1.1	2700	60000	0.80	7200	0.60	3450	60000	
C 90 4_712.2	712.2	1.3	7200	1.0	2760	60000	0.70	7200	0.60	3500	60000	
C 90 4_773.6	773.6	1.2	7200	1.0	2720	60000	0.60	7200	0.50	3480	60000	
C 90 4_844.0	844.0	1.1	7200	0.90	2790	60000	0.60	7200	0.50	3500	60000	
C 90 4_922.3	922.3	1.0	7200	0.80	2730	60000	0.50	7200	0.40	3490	60000	
C 90 4_1006	1006	0.90	7200	0.70	2800	60000	0.50	7200	0.40	3500	60000	
C 90 4_1137	1137	0.80	7200	0.70	2740	60000	0.40	7200	0.40	3500	60000	
C 90 4_1240	1240	0.70	7200	0.60	2800	60000	0.40	7200	0.30	3500	60000	

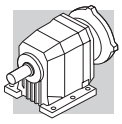

C 100 — 12000 Nm

	i	n_1 = 2800 min^{-1}					n_1 = 1400 min^{-1}					
		n_2 min^{-1}	M_{n2} Nm	P_{n1} kW	R_{n1} N	R_{n2} N	n_2 min^{-1}	M_{n2} Nm	P_{n1} kW	R_{n1} N	R_{n2} N	
C 100 2_4.9	4.9	569	5500	345	1900	20600	285	6800	213	3790	25300	
C 100 2_5.3	5.3	525	5650	327	2790	21000	263	6950	201	4940	25800	
C 100 2_6.5	6.5	429	6150	291	1920	21800	215	7550	179	3950	27000	
C 100 2_7.1	7.1	396	6200	271	3100	22700	198	7650	167	5270	27900	
C 100 2_8.4	8.4	335	6700	248	1870	22800	168	8200	152	3970	28500	
C 100 2_9.0	9.0	309	6800	232	2950	23500	155	8350	142	5190	29200	
C 100 2_10.1	10.1	278	7100	217	1930	24100	139	8750	134	3900	29500	
C 100 2_10.9	10.9	256	7100	200	3240	25700	128	8750	124	5460	31600	
C 100 2_12.5	12.5	225	7650	190	1360	24900	112	9400	117	3260	30800	
C 100 2_13.5	13.5	208	7700	176	2600	26300	104	9500	109	4680	32100	
C 100 2_15.2	15.2	184	8100	164	1270	26600	92	10000	101	2680	32500	
C 100 2_16.5	16.5	170	8250	154	2320	27200	85	10150	95	4420	33600	
C 100 2_18.7	18.7	150	8200	136	1500	30800	75	10000	83	3600	38000	
C 100 2_20.2	20.2	138	8100	124	3047	32200	69	10000	76	5210	39600	
C 100 2_22.2	22.2	126	7500	104	3570	35800	63	9200	64	5960	44100	
C 100 2_24.1	24.1	116	8100	104	3620	35200	58	10000	64	5900	43300	
C 100 2_29.6	29.6	95	6900	72	6380	42400	47	8500	44	9220	52200	
C 100 3_34.3	34.3	82	10350	95	9790	33300	41	11700	54	13000	46400	
C 100 3_36.9	36.9	76	10650	91	10200	34500	38	11800	50	13100	48000	
C 100 3_42.9	42.9	65	11350	83	9640	33200	33	12000	44	13100	51200	
C 100 3_46.2	46.2	61	11700	80	10100	33100	30	12000	41	13300	53100	
C 100 3_53.3	53.3	53	12000	71	9450	36400	26.3	12000	36	13200	56900	
C 100 3_57.4	57.4	49	12000	66	10200	39500	24.4	12000	33	13400	59000	
C 100 3_64.5	64.5	43	12000	59	9950	44100	21.7	12000	29	13400	62300	
C 100 3_69.4	69.4	40	12000	54	10400	45900	20.2	12000	27	13500	64500	
C 100 3_79.4	79.4	35	12000	48	10300	49200	17.6	12000	24	13500	68600	161
C 100 3_85.6	85.6	33	12000	44	10400	51100	16.4	12000	22	13600	70900	
C 100 3_92.7	92.7	30	12000	41	10400	53200	15.1	12000	20	13500	73500	
C 100 3_99.8	99.8	28.1	12000	38	10500	55200	14.0	12000	19.0	13600	75900	
C 100 3_111.9	111.9	25.0	12000	34	10400	58300	12.5	12000	16.9	13500	79800	
C 100 3_120.5	120.5	23.2	12000	31	10500	60400	11.6	12000	15.7	13700	82400	
C 100 3_139.7	139.7	20.0	11050	25	10600	67400	10.0	11050	12.5	13700	85000	
C 100 3_150.4	150.4	18.6	12000	25	10600	66900	9.3	12000	12.6	13700	85000	
C 100 4_162.1	162.1	17.3	12000	24	—	85000	8.6	12000	11.9	—	85000	
C 100 4_185.4	185.4	15.1	12000	21	—	85000	7.6	12000	10.4	—	85000	
C 100 4_199.6	199.6	14.0	12000	19.4	—	85000	7.0	12000	9.7	—	85000	
C 100 4_244.2	244.2	11.5	12000	15.8	—	85000	5.7	12000	7.9	—	85000	
C 100 4_263.0	263.0	10.6	12000	14.7	—	85000	5.3	12000	7.4	—	85000	
C 100 4_300.5	300.5	9.3	12000	12.9	—	85000	4.7	12000	6.4	—	85000	
C 100 4_323.6	323.6	8.7	12000	11.9	—	85000	4.3	12000	6.0	—	85000	
C 100 4_380.5	380.5	7.4	12000	10.2	—	85000	3.7	12000	5.1	—	85000	
C 100 4_409.8	409.8	6.8	12000	9.4	—	85000	3.4	12000	4.7	—	85000	
C 100 4_466.7	466.7	6.0	12000	8.3	—	85000	3.0	12000	4.1	—	85000	
C 100 4_502.6	502.6	5.6	12000	7.7	—	85000	2.8	12000	3.8	—	85000	
C 100 4_582.6	582.6	4.8	12000	6.6	—	85000	2.4	12000	3.3	—	85000	
C 100 4_627.4	627.4	4.5	12000	6.2	—	85000	2.2	12000	3.1	—	85000	
C 100 4_720.3	720.3	3.9	12000	5.4	—	85000	1.9	12000	2.7	—	85000	
C 100 4_775.7	775.7	3.6	12000	5.0	—	85000	1.8	12000	2.5	—	85000	
C 100 4_843.3	843.3	3.3	12000	4.6	—	85000	1.7	12000	2.3	—	85000	
C 100 4_908.2	908.2	3.1	12000	4.3	—	85000	1.5	12000	2.1	830	85000	
C 100 4_1004	1004	2.8	12000	3.9	—	85000	1.4	12000	1.9	—	85000	
C 100 4_1081	1081	2.6	12000	3.6	—	85000	1.3	12000	1.8	870	85000	

(—) 请联系我们的技术部门并告知径向负载信息 (转向, 力的方向, 位置)

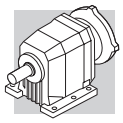

C 100 — 12000 Nm

	i	n_1 = 900 min^{-1}					n_1 = 500 min^{-1}					
		n_2 min^{-1}	M_{n2} Nm	P_{n1} kW	R_{n1} N	R_{n2} N	n_2 min^{-1}	M_{n2} Nm	P_{n1} kW	R_{n1} N	R_{n2} N	
C 100 2_4.9	4.9	183	7800	157	5310	28800	102	9300	104	6720	34400	
C 100 2_5.3	5.3	169	7950	148	6680	29500	94	9450	98	9740	35200	
C 100 2_6.5	6.5	138	8600	131	5670	31000	77	10250	87	7540	37000	
C 100 2_7.1	7.1	127	8750	123	7050	31800	71	10450	81	10100	37800	
C 100 2_8.4	8.4	108	9350	111	5670	32600	60	10950	72	8530	40100	
C 100 2_9.0	9.0	99	9500	104	7080	33600	55	11350	69	10100	39900	
C 100 2_10.1	10.1	89	10000	98	5540	33600	50	10900	60	10600	44500	
C 100 2_10.9	10.9	82	10150	92	6980	34700	46	11500	58	11300	44300	
C 100 2_12.5	12.5	72	10700	85	3910	35400	40	10850	48	11700	49600	
C 100 2_13.5	13.5	67	10850	80	6440	36700	37	11450	47	12300	49500	
C 100 2_15.2	15.2	59	10800	70	5940	40800	33	10800	39	13000	54700	
C 100 2_16.5	16.5	55	11500	69	6320	39100	30	11500	38	13400	54500	
C 100 2_18.7	18.7	48	10900	58	6310	45100	26.8	10900	32	13400	59800	
C 100 2_20.2	20.2	45	11500	56	6890	45000	24.7	11500	31	14000	60100	
C 100 2_22.2	22.2	40	9850	44	9170	52200	22.5	9850	24	15000	67800	
C 100 2_24.1	24.1	37	10800	44	8930	51200	20.7	10800	25	15000	67200	
C 100 2_29.6	29.6	30	9100	31	12600	61400	16.9	9100	17.0	15000	78300	
C 100 3_34.3	34.3	26.2	11700	35	15000	57800	14.6	11700	19.2	15000	75500	
C 100 3_36.9	36.9	24.4	11800	32	15000	59600	13.5	11800	18.0	15000	77700	
C 100 3_42.9	42.9	21.0	12000	28	15000	63400	11.6	12000	15.7	15000	82300	
C 100 3_46.2	46.2	19.5	12000	26	15000	65600	10.8	12000	14.6	15000	84900	
C 100 3_53.3	53.3	16.9	12000	23	15000	69900	9.4	12000	12.7	15000	85000	
C 100 3_57.4	57.4	15.7	12000	21	15000	72300	8.7	12000	11.8	15000	85000	
C 100 3_64.5	64.5	14.0	12000	18.6	15000	76100	7.8	12000	10.5	15000	85000	
C 100 3_69.4	69.4	13.0	12000	17.5	15000	78600	7.2	12000	9.7	15000	85000	
C 100 3_79.4	79.4	11.3	12000	15.3	15000	83300	6.3	12000	8.5	15000	85000	
C 100 3_85.6	85.6	10.5	12000	14.2	15000	85000	5.8	12000	7.9	15000	85000	161
C 100 3_92.7	92.7	9.7	12000	13.1	15000	85000	5.4	12000	7.3	15000	85000	
C 100 3_99.8	99.8	9.0	12000	12.2	15000	85000	5.0	12000	6.8	15000	85000	
C 100 3_111.9	111.9	8.0	12000	10.9	15000	85000	4.5	12000	6.0	15000	85000	
C 100 3_120.5	120.5	7.5	12000	10.1	15000	85000	4.1	12000	5.6	15000	85000	
C 100 3_139.7	139.7	6.4	11500	8.0	15000	85000	3.6	11050	4.5	15000	85000	
C 100 3_150.4	150.4	6.0	12000	8.1	15000	85000	3.3	12000	4.5	15000	85000	
C 100 4_162.1	162.1	5.6	12000	7.7	—	85000	3.1	12000	4.3	—	85000	
C 100 4_185.4	185.4	4.9	12000	6.7	—	85000	2.7	12000	3.7	920	85000	
C 100 4_199.6	199.6	4.5	12000	6.2	—	85000	2.5	12000	3.5	1430	85000	
C 100 4_244.2	244.2	3.7	12000	5.1	—	85000	2.0	12000	2.8	1490	85000	
C 100 4_263.0	263.0	3.4	12000	4.7	—	85000	1.9	12000	2.6	1950	85000	
C 100 4_300.5	300.5	3.0	12000	4.1	—	85000	1.7	12000	2.3	1840	85000	
C 100 4_323.6	323.6	2.8	12000	3.8	850	85000	1.5	12000	2.1	2280	85000	
C 100 4_380.5	380.5	2.4	12000	3.3	700	85000	1.3	12000	1.8	2130	85000	
C 100 4_409.8	409.8	2.2	12000	3.0	1120	85000	1.2	12000	1.7	2550	85000	
C 100 4_466.7	466.7	1.9	12000	2.7	910	85000	1.1	12000	1.5	2340	85000	
C 100 4_502.6	502.6	1.8	12000	2.5	1320	85000	1.0	12000	1.4	2740	85000	
C 100 4_582.6	582.6	1.5	12000	2.1	1100	85000	0.90	12000	1.2	2520	85000	
C 100 4_627.4	627.4	1.4	12000	2.0	1490	85000	0.80	12000	1.1	2910	85000	
C 100 4_720.3	720.3	1.2	12000	1.7	1270	85000	0.70	12000	1.0	2700	85000	
C 100 4_775.7	775.7	1.2	12000	1.6	1650	85000	0.60	12000	0.90	3070	85000	
C 100 4_843.3	843.3	1.1	12000	1.5	1360	85000	0.60	12000	0.80	2790	85000	
C 100 4_908.2	908.2	1.0	12000	1.4	1730	85000	0.60	12000	0.80	3160	85000	
C 100 4_1004	1004	0.90	12000	1.2	1400	85000	0.50	12000	0.70	2830	85000	
C 100 4_1081	1081	0.90	12000	1.1	1770	85000	0.50	12000	0.60	3170	85000	

(—) 请联系我们的技术部门并告知径向负载信息 (转向, 力的方向, 位置)

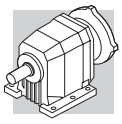

27 电机与减速机的组合范围

请注意下表中的中电机与减速机的组合，仅仅基于结构上的兼容性。

在选择减速电机时，参照第12章的步骤，并且满足条件S⩾ f_S。

(B 22)

		IEC_ 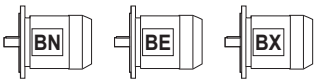 (IM B5)																								
		BN		BN	BE	BX	BN	BE	BX	BN	BE	BX	BN	BE	BX	BN	BE	BX	BN	BE	BX	BN	BE	BX	BN	IEC	IEC	IEC
P_{n1}(#) [kW]	2p	0.37	0.75	1.5	1.1	—	2.2	2.2	—	4	3	—	4	4	—	9.2	9.2	—	18.5	18.5	—	22	—	—	30	45	55	90
	4p	0.25	0.55	1.1	0.75	0.75	1.85	1.5	1.5	3	3	3	4	4	4	9.2	9.2	7.5	15	15	15	22	22	22	30	47	55	90
	6p	0.12	0.37	0.75	—	—	1.1	0.75	—	1.85	1.5	—	2.2	2.2	—	5.5	4	—	11	7.5	—	15	—	—	18.5	30	37	55
		P63	P71	P80			P90			P100			P112			P132			P160			P180			P200	P225	P250	P280
C 12 2		2.8_66.2		2.8_47.6						2.8_47.6																		
C 22 2		3.7_63.3 ⛀ (7.1_8.7)		2.7_54.7						2.7_54.7																		
C 22 3		60.0_261.0		60.0_261.0						60.0_261.0																		
C 32 2		5.0_66.8 ⛀ (7.2_11.2)		2.9_66.8						2.9_66.8						2.9_25.1												
C 32 3		74.7_274.7		74.7_274.7						74.7_274.7																		
C 36 2		4.6_19.0 ⛀ (6.8_10.6)		2.7_19.0						2.7_19.0						2.7_19.0												
C 36 3		38.1_206.4		22.1_206.4						22.1_206.4						22.1_77.6												
C 36 4		230.9_848.5		230.9_848.5						230.9_848.5																		
C 41 2		14.2_44.8		2.7_44.8						2.7_44.8						2.7_31.4												
C 41 3		47.0_209.1		28.5_209.1						28.5_209.1						28.5_102.3												
C 41 4		239.9_855.5		239.9_855.5						239.9_855.5																		
C 51 2		18.9_57.0		2.6_57.0						2.6_57.0						2.6_40.4			2.6_40.4			2.6_40.4						
C 51 3		59.0_216.7		21.8_216.7						21.8_216.7						21.8_124.4			21.8_124.4			21.8_124.4						
C 51 4		240.9_884.9		240.9_884.9						240.9_884.9																		
C 61 2	i =	22.4_38.0		3.7_38.0 ⛀ (6.7_7.5)						3.7_38.0 ⛀ (6.7_7.5)						2.8_38.0			2.8_38.0			2.8_38.0						
C 61 3		67.7_195.8		26.8_195.8						26.8_195.8						26.8_140.5			26.8_140.5			26.8_140.5						
C 61 4		217.4_796.1		217.4_796.1						217.4_796.1																		
C 70 2				14.1_34.7 ⛀ (15.3)						14.1_34.7 ⛀ (15.3)						7.5_34.7 ⛀ (8.0)			4.6_34.7			4.6_34.7			4.6_10.2 ⛀ (9.5)			
C 70 3				41.3_239.3						41.3_239.3						41.3_137.4			41.3_137.4			41.3_137.4						
C 70 4		251.3_1476		251.3_1476						251.3_1476						251.3_554.7												
C 80 2				20.5_39.1						20.5_39.1						11.1_39.1			7.0_39.1			5.6_39.1			5.6_25.9	5.6_25.9		
C 80 3				43.5_215.8						43.5_215.8						43.5_184.4			43.5_184.4			43.5_184.4						
C 80 4		334.3_1481		261.9_1481						261.9_1481						261.9_724.7												
C 90 2				22.9_35.1						22.9_35.1						12.8_35.1			10.4_35.1			10.4_35.1			5.2_29.4	5.2_29.4	5.2_29.4	
C 90 3				74.4_172.1						74.4_172.1						39.4_172.1			39.4_172.1			39.4_172.1			39.4_96.2	39.4_96.2	39.4_96.2	
C 90 4		339.0_1240		212.4_1240						212.4_1240						212.4_712.2			212.4_712.2			212.4_712.2						
C 100 2										29.6						15.2_29.6			12.5_29.6			12.5_29.6			4.9_29.6	4.9_29.6	4.9_29.6	4.9_29.6
C 100 3										79.4_150.4						42.9_150.4			34.3_150.4			34.3_150.4			34.3_99.8	34.3_99.8	34.3_99.8	34.3_99.8
C 100 4		380.5_1081		162.1_1081						162.1_1081						162.1_775.7			162.1_775.7			162.1_775.7						

（#）P_{n1} 最大输入功率

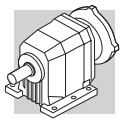

(B 23)

		M	ME	MX				
		M0	M05	M1	ME2 - MX2	ME3 - MX3	ME4 - MX4	ME5 - MX5
C 05 2	i =	27.1_44.7	5.5_44.7	5.5_44.7				
C 12 2			2.8_66.2	2.8_37.0	2.8_47.7	2.8_47.7		
C 22 2			3.7_63.3 ⛀ (7.1_8.7)	3.7_43.3 ⛀ (7.1_8.7)	2.7_54.7	2.7_54.7		
C 22 3			60.0_261.0	60.0_261.0	60.0_261.0	60.0_261.0		
C 32 2				5.0_52.4 ⛀ (7.2_11.2)	2.9_66.8	2.9_66.8	2.9_25.1	
C 32 3			74.7_274.7	74.7_274.7	74.7_274.7	74.7_274.7		
C 36 2				4.6_19.0 ⛀ (6.8_10.6)	2.7_19.0	2.7_19.0	2.7_19.0	
C 36 3				38.1_162.0	22.1_206.4	22.1_206.4	22.1_77.6	
C 36 4			230.9_848.5	230.9_848.5	230.9_848.5	230.9_848.5		
C 41 2				14.2_44.8	2.7_44.8	2.7_44.8	2.7_31.4	
C 41 3				47.0_209.1	28.5_209.1	28.5_209.1	28.5_102.3	
C 41 4			239.9_855.5	239.9_855.5	239.9_855.5	239.9_855.5		
C 51 2				18.9_57.0	2.6_57.0	2.6_57.0	2.6_40.4	2.6_40.4
C 51 3				59.0_216.7	21.8_216.7	21.8_216.7	21.8_124.4	21.8_124.4
C 51 4				240.9_884.9	240.9_884.9	240.9_884.9		
C 61 2					3.7_38.0 ⛀ (6.7_7.5)	3.7_38.0 ⛀ (6.7_7.5)	2.8_38.0	2.8_38.0
C 61 3					26.8_195.8	26.8_195.8	26.8_140.5	26.8_140.5
C 61 4				217.4_796.1	217.4_796.1	217.4_796.1		
C 70 2					14.1_34.7 ⛀ (15.3)	14.1_34.7 ⛀ (15.3)	7.5_34.7 ⛀ (8.0)	7.5_34.7 ⛀ (8.0)
C 70 3					41.3_239.3	41.3_239.3	41.3_137.4	41.3_137.4
C 70 4				251.3_1476	251.3_1476	251.3_1476	251.3_554.7	
C 80 2						20.5_39.1	11.1_39.1	11.1_39.1
C 80 3						43.5_215.8	43.5_184.4	43.5_184.4
C 80 4				334.3_1481	261.9_1481	261.9_1481	261.9_724.7	
C 90 2						22.9_35.1	12.8_35.1	12.8_35.1
C 90 3						74.4_172.1	39.4_172.1	39.4_172.1
C 90 4				339.0_1240	212.4_1240	212.4_1240	212.4_712.2	
C 100 2							15.2_29.6	15.2_29.6
C 100 3							42.9_150.4	42.9_150.4
C 100 4				380.5_1081	162.1_1081	162.1_1081	162.1_775.7	

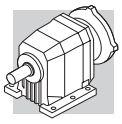

机座C12…C61提供与最常用伺服电机品牌匹配的电机接头。每个机座的图纸部分可查到伺服电机接头相关尺寸。
代码**SK**适用传统的平键输入，而**SC**则适用带有阻尼装置的输入端。

(B 24)

		SERVO INPUT							
		SK60A	SK60B	SK80A	SK80B	SK80C	SK95A	SK95B	SK95C
		SC60A	SC60B	SC80A	SC80B	SC80C	SC95A	SC95B	SC95C
C 12 2	i =	2.8_66.2	2.8_66.2	2.8_66.2		2.8_47.6	2.8_66.2	2.8_47.6	2.8_47.6
C 22 2		3.7_63.3 ⛀ (7.1_8.7)	3.7_63.3 ⛀ (7.1_8.7)	3.7_63.3 ⛀ (7.1_8.7)		2.7_54.7	3.7_63.3 ⛀ (7.1_8.7)	2.7_54.7	2.7_54.7
C 22 3		60.0_261.0	60.0_261.0	60.0_261.0		60.0_261.0	60.0_261.0	60.0_261.0	60.0_261.0
C 32 2		5.0_66.8 ⛀ (7.2_11.2)	5.0_66.8 ⛀ (7.2_11.2)	5.0_66.8 ⛀ (7.2_11.2)		2.9_66.8	5.0_66.8 ⛀ (7.2_11.2)	2.9_66.8	2.9_66.8
C 32 3		74.7_274.7	74.7_274.7	74.7_274.7		74.7_274.7	74.7_274.7	74.7_274.7	74.7_274.7
C 36 2		4.6_19.0 ⛀ (6.8_10.6)	4.6_19.0 ⛀ (6.8_10.6)	4.6_19.0 ⛀ (6.8_10.6)		2.7_19.0	4.6_19.0 ⛀ (6.8_10.6)	2.7_19.0	2.7_19.0
C 36 3		38.1_206.4	38.1_206.4	38.1_206.4		22.1_206.4	38.1_206.4	22.1_206.4	22.1_206.4
C 36 4		230.9_848.5	230.9_848.5	230.9_848.5		230.9_848.5	230.9_848.5	230.9_848.5	230.9_848.5
C 41 2					6.0_44.8 ⛀ (6.4_12.4)	2.7_44.8	6.0_44.8 ⛀ (6.4_12.4)	2.7_44.8	2.7_44.8
C 41 3					47.0_209.1	28.5_209.1	47.0_209.1	28.5_209.1	28.5_209.1
C 41 4		239.9_855.5	239.9_855.5	239.9_855.5		239.9_855.5	239.9_855.5	239.9_855.5	239.9_855.5
C 51 2					18.9_57.0	2.6_57.0	18.9_57.0	2.6_57.0	2.6_57.0
C 51 3					59.0_216.7	21.8_216.7	59.0_216.7	21.8_216.7	21.8_216.7
C 51 4						240.9_884.9	240.9_884.9	240.9_884.9	240.9_884.9
C 61 2						3.7_38.0 ⛀ (6.7_7.5)	22.4_38.0	3.7_38.0 ⛀ (6.7_7.5)	3.7_38.0 ⛀ (6.7_7.5)
C 61 3						26.8_195.8	67.7_195.8	26.8_195.8	26.8_195.8
C 61 4					217.4_796.1	217.4_796.1	217.4_796.1	217.4_796.1	217.4_796.1

(B 25)

		SK110A	SK110B	SK130A	SK130B	SK180A	SK180B
		SC110A	SC110B	SC130A	SC130B	SC180A	SC180B
C 12 2	i =	2.8_47.6	2.8_47.6				
C 22 2		2.7_54.7	2.7_54.7				
C 22 3		60.0_261.0	60.0_261.0				
C 32 2		2.9_66.8	2.9_66.8	2.9_66.8			
C 32 3		74.7_274.7	74.7_274.7				
C 36 2		2.7_19.0	2.7_19.0	2.7_19.0			
C 36 3		22.1_206.4	22.1_206.4	22.1_206.4			
C 36 4		230.9_848.5	230.9_848.5				
C 41 2		2.7_44.8	2.7_44.8	2.7_44.8	2.7_31.4	2.7_31.4	2.7_31.4
C 41 3		28.5_209.1	28.5_209.1	28.5_209.1	28.5_102.3	28.5_102.3	28.5_102.3
C 41 4		239.9_855.5	239.9_855.5				
C 51 2		2.6_57.0	2.6_57.0	2.6_57.0	2.6_40.4	2.6_40.4	2.6_40.4
C 51 3		21.8_216.7	21.8_216.7	21.8_216.7	21.8_124.4	21.8_124.4	21.8_124.4
C 51 4		240.9_884.9	240.9_884.9	240.9_884.9			
C 61 2		3.7_38.0 ⛀ (6.7_7.5)	3.7_38.0 ⛀ (6.7_7.5)	3.7_38.0 ⛀ (6.7_7.5)	2.8_38.0	2.8_38.0	2.8_38.0
C 61 3		26.8_195.8	26.8_195.8	26.8_195.8	26.8_140.5	26.8_140.5	26.8_140.5
C 61 4		217.4_796.1	217.4_796.1	217.4_796.1			

28 转动惯量

下表列出的转动惯量J_r [kgm2]是指减速机高速轴。图例使用的符号如下：



这种图标下的数值指不带电机的紧凑型输入接口的减速机。加上紧凑型电机的转动惯量（在相关的额定值表中给出），可以得到总的转动惯量。



这种图标下的数值指带IEC电机接口的减速机(IEC 标准尺寸...)。

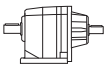

这种图标下的数值指带实心输入轴的减速机。



这种图标下的数值指带伺服电机接口的减速机。

C 05

	i	J (•10^{-4}) [kgm^2] 
C 05_5.5	5.5	0.29
C 05_6.7	6.7	0.29
C 05_7.4	7.4	0.28
C 05_9.3	9.3	0.17
C 05_11.2	11.2	0.16
C 05_12.5	12.5	0.16
C 05_15.6	15.6	0.09
C 05_18.9	18.9	0.09
C 05_21.0	21.0	0.08
C 05_27.1	27.1	0.04
C 05_32.8	32.8	0.04
C 05_36.4	36.4	0.04
C 05_40.3	40.3	0.03
C 05_44.7	44.7	0.03

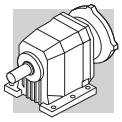

C 12

	i	J (•10-4) [kgm2]							
			IEC						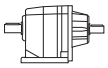
			63	71	80	90	100	112	
C 12 2_2.8	2.8	0.44	1.9	1.9	3.3	3.2	4.5	4.5	1.3
C 12 2_3.2	3.2	0.34	1.8	1.8	3.2	3.1	4.4	4.4	1.2
C 12 2_3.7	3.7	0.29	1.8	1.7	3.1	3.1	4.4	4.4	1.2
C 12 2_4.3	4.3	0.21	1.7	1.7	3.1	3.0	4.3	4.3	1.1
C 12 2_4.9	4.9	0.19	1.7	1.7	3.0	3.0	4.3	4.3	1.1
C 12 2_5.6	5.6	0.15	1.6	1.6	3.0	2.9	4.2	4.2	1.0
C 12 2_6.2	6.2	0.12	1.6	1.6	3.0	2.9	4.2	4.2	1.0
C 12 2_7.6	7.6	0.33	1.8	1.8	3.2	3.1	4.4	4.4	1.2
C 12 2_8.8	8.8	0.32	1.8	1.8	3.2	3.1	4.4	4.4	1.2
C 12 2_10.1	10.1	0.23	1.7	1.7	3.1	3.0	4.3	4.3	1.1
C 12 2_11.9	11.9	0.17	1.6	1.6	3.0	3.0	4.2	4.2	1.1
C 12 2_13.4	13.4	0.16	1.6	1.6	3.0	2.9	4.2	4.2	1.1
C 12 2_15.4	15.4	0.12	1.6	1.6	3.0	2.9	4.2	4.2	1.0
C 12 2_17.2	17.2	0.10	1.6	1.6	2.9	2.9	4.2	4.2	1.0
C 12 2_18.4	18.4	0.08	1.6	1.5	2.9	2.9	4.2	4.2	0.98
C 12 2_20.6	20.6	0.08	1.5	1.5	2.9	2.9	4.2	4.2	0.98
C 12 2_23.2	23.2	0.07	1.5	1.5	2.9	2.9	4.1	4.1	0.97
C 12 2_25.4	25.4	0.06	1.5	1.5	2.9	2.8	4.1	4.1	0.96
C 12 2_29.5	29.5	0.05	1.5	1.5	2.9	2.8	4.1	4.1	0.95
C 12 2_32.8	32.8	0.04	1.5	1.5	2.9	2.8	4.1	4.1	0.94
C 12 2_37.0	37.0	0.03	1.5	1.5	2.9	2.8	4.1	4.1	0.93
C 12 2_42.3	42.3	0.03	1.5	1.5	2.9	2.8	4.1	4.1	0.93
C 12 2_47.6	47.6	0.02	1.5	1.5	2.9	2.8	4.1	4.1	0.92
C 12 2_55.2	55.2	0.02	1.5	1.5	—	—	—	—	0.92
C 12 2_66.2	66.2	0.01	1.5	1.5	—	—	—	—	0.91

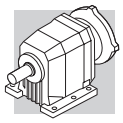

C 12

	i	J (•10-4) [kgm2]									
		SERVO									
		60A		60B 80A		95A		80C 95B 110A		95C 110B	
		SK	SC	SK	SC	SK	SC	SK	SC	SK	SC
C 12 2_2.8	2.8	0.71	0.97	0.73	1.2	3.3	3.7	3.3	3.8	3.2	4.2
C 12 2_3.2	3.2	0.61	0.87	0.63	1.1	3.2	3.6	3.2	3.7	3.1	4.1
C 12 2_3.7	3.7	0.56	0.82	0.58	1.0	3.1	3.5	3.1	3.6	3.1	4.1
C 12 2_4.3	4.3	0.48	0.74	0.50	0.94	3.0	3.5	3.1	3.6	3.0	4.0
C 12 2_4.9	4.9	0.46	0.72	0.48	0.92	3.0	3.4	3.0	3.5	3.0	4.0
C 12 2_5.6	5.6	0.42	0.68	0.44	0.88	3.0	3.4	3.0	3.5	2.9	3.9
C 12 2_6.2	6.2	0.39	0.65	0.41	0.85	2.9	3.4	3.0	3.5	2.9	3.9
C 12 2_7.6	7.6	0.60	0.86	0.62	1.1	3.2	3.6	3.2	3.7	3.1	4.1
C 12 2_8.8	8.8	0.59	0.85	0.61	1.0	3.1	3.6	3.2	3.7	3.1	4.1
C 12 2_10.1	10.1	0.50	0.76	0.52	0.96	3.1	3.5	3.1	3.6	3.0	4.0
C 12 2_11.9	11.9	0.44	0.70	0.46	0.90	3.0	3.4	3.0	3.5	3.0	4.0
C 12 2_13.4	13.4	0.43	0.69	0.45	0.83	3.0	3.4	3.0	3.5	2.9	3.9
C 12 2_15.4	15.4	0.39	0.65	0.41	0.85	2.9	3.4	3.0	3.5	2.9	3.9
C 12 2_17.2	17.2	0.37	0.63	0.39	0.83	2.9	3.4	2.9	3.4	2.9	3.9
C 12 2_18.4	18.4	0.35	0.61	0.37	0.81	2.9	3.3	2.9	3.4	2.9	3.9
C 12 2_20.6	20.6	0.35	0.61	0.37	0.81	2.9	3.3	2.9	3.4	2.9	3.9
C 12 2_23.2	23.2	0.34	0.60	0.36	0.80	2.9	3.3	2.9	3.4	2.9	3.9
C 12 2_25.4	25.4	0.33	0.59	0.35	0.79	2.9	3.3	2.9	3.4	2.8	3.8
C 12 2_29.5	29.5	0.32	0.58	0.34	0.78	2.9	3.3	2.9	3.4	2.8	3.8
C 12 2_32.8	32.8	0.34	0.60	0.33	0.77	2.9	3.3	2.9	3.4	2.8	3.8
C 12 2_37.0	37.0	0.30	0.56	0.32	0.76	2.9	3.3	2.9	3.4	2.8	3.8
C 12 2_42.3	42.3	0.30	0.56	0.32	0.76	2.9	3.3	2.9	3.4	2.8	3.8
C 12 2_47.6	47.6	0.29	0.55	0.31	0.75	2.8	3.3	2.9	3.4	2.8	3.8
C 12 2_55.2	55.2	0.29	0.55	0.31	0.75	2.8	3.3	—	—	—	—
C 12 2_66.2	66.2	0.28	0.54	0.30	0.74	2.8	3.3	—	—	—	—

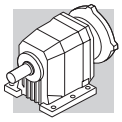

C 22

	i	J (•10-4) [kgm2]							
			IEC						
			63	71	80	90	100	112	
C 22 2_2.7	2.7	1.2	—	—	4.0	4.0	5.3	5.3	3.1
C 22 2_3.3	3.3	0.83	—	—	3.7	3.6	4.9	4.9	2.7
C 22 2_3.7	3.7	0.72	2.2	2.2	3.6	3.5	4.8	4.8	2.6
C 22 2_4.3	4.3	0.56	2.0	2.0	3.4	3.3	4.6	4.6	2.4
C 22 2_4.8	4.8	0.48	2.0	1.9	3.3	3.3	4.6	4.6	2.4
C 22 2_5.6	5.6	0.36	1.8	1.8	3.2	3.2	4.4	4.4	2.2
C 22 2_6.1	6.1	0.29	1.8	1.7	3.1	3.1	4.4	4.4	2.2
C 22 2_7.1	7.1	0.77	—	—	3.6	3.6	4.8	4.8	2.6
C 22 2_8.7	8.7	0.55	—	—	3.4	3.3	4.6	4.6	2.4
C 22 2_9.6	9.6	0.50	2.0	2.0	3.3	3.3	4.6	4.6	2.4
C 22 2_11.1	11.1	0.39	1.9	1.8	3.2	3.2	4.5	4.5	2.3
C 22 2_12.4	12.4	0.35	1.8	1.8	3.2	3.1	4.4	4.4	2.2
C 22 2_14.5	14.5	0.36	1.7	1.7	3.1	3.1	4.3	4.3	2.1
C 22 2_15.8	15.8	0.20	1.7	1.7	3.1	3.0	4.3	4.3	2.1
C 22 2_18.1	18.1	0.18	1.6	1.6	3.0	3.0	4.3	4.3	2.0
C 22 2_20.0	20.0	0.15	1.6	1.6	3.0	2.9	4.2	4.2	2.0
C 22 2_21.5	21.5	0.13	1.6	1.6	3.0	2.9	4.2	4.2	2.0
C 22 2_24.3	24.3	0.12	1.6	1.6	3.0	2.9	4.2	4.2	2.0
C 22 2_27.2	27.2	0.10	1.6	1.6	3.0	2.9	4.2	4.2	2.0
C 22 2_29.6	29.6	0.09	1.6	1.5	2.9	2.9	4.2	4.2	2.0
C 22 2_33.1	33.1	0.07	1.5	1.5	2.9	2.9	4.2	4.2	1.9
C 22 2_36.8	36.8	0.06	1.5	1.5	2.9	2.8	4.1	4.1	1.9
C 22 2_43.3	43.3	0.05	1.5	1.5	2.9	2.8	4.1	4.1	1.9
C 22 2_48.6	48.6	0.04	1.5	1.5	2.9	2.8	4.1	4.1	1.9
C 22 2_54.7	54.7	0.03	1.5	1.5	2.9	2.8	4.1	4.1	1.9
C 22 2_63.3	63.3	0.02	1.5	1.5	—	—	—	—	1.9
C 22 3_60.0	60.0	0.04	1.5	1.5	2.9	2.8	4.1	4.1	0.94
C 22 3_65.3	65.3	0.03	1.5	1.5	2.9	2.8	4.1	4.1	0.93
C 22 3_74.8	74.8	0.03	1.5	1.5	2.9	2.8	4.1	4.1	0.93
C 22 3_82.6	82.6	0.03	1.5	1.5	2.9	2.8	4.1	4.1	0.93
C 22 3_88.5	88.5	0.03	1.5	1.5	2.9	2.8	4.1	4.1	0.93
C 22 3_100.2	100.2	0.03	1.5	1.5	2.9	2.8	4.1	4.1	0.93
C 22 3_112.0	112.0	0.03	1.5	1.5	2.9	2.8	4.1	4.1	0.93
C 22 3_122.2	122.2	0.03	1.5	1.5	2.9	2.8	4.1	4.1	0.93
C 22 3_136.5	136.5	0.02	1.5	1.5	2.9	2.8	4.1	4.1	0.92
C 22 3_151.7	151.7	0.02	1.5	1.5	2.9	2.8	4.1	4.1	0.92
C 22 3_178.5	178.5	0.02	1.5	1.5	2.9	2.8	4.1	4.1	0.92
C 22 3_200.7	200.7	0.02	1.5	1.5	2.9	2.8	4.1	4.1	0.92
C 22 3_225.8	225.8	0.02	1.5	1.5	2.9	2.8	4.1	4.1	0.92
C 22 3_261.0	261.0	0.02	1.5	1.5	2.9	2.8	4.1	4.1	0.92

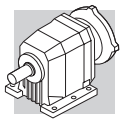

C 22

	i	J (•10-4) [kgm2]									
		SERVO									
		60A		60B 80A		95A		80C 95B 110A		95C 110B	
		SK	SC	SK	SC	SK	SC	SK	SC	SK	SC
C 22 2_2.7	2.7	—	—	—	—	—	—	4.0	4.5	4.0	5.0
C 22 2_3.3	3.3	—	—	—	—	—	—	3.7	4.2	3.6	4.6
C 22 2_3.7	3.7	0.99	1.3	1.0	1.4	3.5	4.0	3.6	4.1	3.5	4.5
C 22 2_4.3	4.3	0.83	1.1	0.85	1.3	3.4	3.8	3.4	3.9	3.3	4.3
C 22 2_4.8	4.8	0.75	1.0	0.77	1.2	3.3	3.7	3.3	3.8	3.3	4.3
C 22 2_5.6	5.6	0.63	0.89	0.65	1.1	3.2	3.6	3.2	3.7	3.2	4.2
C 22 2_6.1	6.1	0.56	0.82	0.58	1.0	3.1	3.5	3.1	3.6	3.1	4.1
C 22 2_7.1	7.1	—	—	—	—	—	—	3.6	4.1	3.6	4.6
C 22 2_8.7	8.7	—	—	—	—	—	—	3.4	3.9	3.3	4.3
C 22 2_9.6	9.6	0.77	1.0	0.79	1.2	3.3	3.8	3.3	3.8	3.3	4.3
C 22 2_11.1	11.1	0.66	0.92	0.68	1.1	3.2	3.6	3.2	3.7	3.2	4.2
C 22 2_12.4	12.4	0.62	0.88	0.64	1.1	3.2	3.6	3.2	3.7	3.1	4.1
C 22 2_14.5	14.5	0.63	0.89	0.65	1.1	3.2	3.6	3.1	3.6	3.1	4.1
C 22 2_15.8	15.8	0.47	0.73	0.49	0.93	3.0	3.5	3.1	3.6	3.0	4.0
C 22 2_18.1	18.1	0.45	0.71	0.47	0.91	3.0	3.4	3.0	3.5	3.0	4.0
C 22 2_20.0	20.0	0.42	0.68	0.44	0.88	3.0	3.4	3.0	3.5	2.9	3.9
C 22 2_21.5	21.5	0.40	0.66	0.42	0.86	3.0	3.4	3.0	3.5	2.9	3.9
C 22 2_24.3	24.3	0.39	0.65	0.41	0.85	2.9	3.4	3.0	3.5	2.9	3.9
C 22 2_27.2	27.2	0.37	0.63	0.39	0.83	2.9	3.4	3.0	3.5	2.9	3.9
C 22 2_29.6	29.6	0.36	0.62	0.38	0.82	2.9	3.3	2.9	3.4	2.9	3.9
C 22 2_33.1	33.1	0.34	0.60	0.36	0.80	2.9	3.3	2.9	3.4	2.9	3.9
C 22 2_36.8	36.8	0.33	0.59	0.35	0.79	2.9	3.3	2.9	3.4	2.8	3.8
C 22 2_43.3	43.3	0.32	0.58	0.34	0.78	2.9	3.3	2.9	3.4	2.8	3.8
C 22 2_48.6	48.6	0.31	0.57	0.33	0.77	2.9	3.3	2.9	3.4	2.8	3.8
C 22 2_54.7	54.7	0.30	0.56	0.32	0.76	2.9	3.3	2.9	3.4	2.8	3.8
C 22 2_63.3	63.3	0.29	0.55	0.31	0.75	2.8	3.3	—	—	—	—
C 22 3_60.0	60.0	0.31	0.57	0.33	0.77	2.9	3.3	2.9	3.4	2.8	3.8
C 22 3_65.3	65.3	0.30	0.56	0.32	0.76	2.9	3.3	2.9	3.4	2.8	3.8
C 22 3_74.8	74.8	0.30	0.56	0.32	0.76	2.9	3.3	2.9	3.4	2.8	3.8
C 22 3_82.6	82.6	0.30	0.56	0.32	0.76	2.9	3.3	2.9	3.4	2.8	3.8
C 22 3_88.5	88.5	0.30	0.56	0.32	0.76	2.9	3.3	2.9	3.4	2.8	3.8
C 22 3_100.2	100.2	0.30	0.56	0.32	0.76	2.9	3.3	2.9	3.4	2.8	3.8
C 22 3_112.0	112.0	0.30	0.56	0.32	0.76	2.9	3.3	2.9	3.4	2.8	3.8
C 22 3_122.2	122.2	0.30	0.56	0.32	0.76	2.9	3.3	2.9	3.4	2.8	3.8
C 22 3_136.5	136.5	0.29	0.55	0.31	0.75	2.8	3.3	2.9	3.4	2.8	3.8
C 22 3_151.7	151.7	0.29	0.55	0.31	0.75	2.8	3.3	2.9	3.4	2.8	3.8
C 22 3_178.5	178.5	0.29	0.55	0.31	0.75	2.8	3.3	2.9	3.4	2.8	3.8
C 22 3_200.7	200.7	0.29	0.55	0.31	0.75	2.8	3.3	2.9	3.4	2.8	3.8
C 22 3_225.8	225.8	0.29	0.55	0.31	0.75	2.8	3.3	2.9	3.4	2.8	3.8
C 22 3_261.0	261.0	0.29	0.55	0.31	0.75	2.8	3.3	2.9	3.4	2.8	3.8

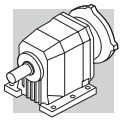

C 32

	i	J (•10-4) [kgm2]								
			IEC							
			63	71	80	90	100	112	132	
C 32 2_2.9	2.9	2.3	—	—	5.2	5.1	6.4	6.4	20	4.6
C 32 2_3.4	3.4	1.8	—	—	4.6	4.6	5.9	5.9	20	4.0
C 32 2_3.7	3.7	1.6	—	—	4.4	4.3	5.6	5.6	20	3.8
C 32 2_4.5	4.5	1.2	—	—	4.0	4.0	5.2	5.2	19	3.4
C 32 2_5.0	5.0	0.87	2.3	2.3	3.7	3.7	5.0	5.0	19	3.1
C 32 2_5.7	5.7	0.82	2.3	2.3	3.7	3.6	4.9	4.9	19	3.0
C 32 2_6.3	6.3	0.63	2.1	2.1	3.5	3.4	4.7	4.7	18	2.8
C 32 2_7.2	7.2	1.5	—	—	4.4	4.3	5.6	5.6	19	3.7
C 32 2_8.5	8.5	1.2	—	—	4.1	4.0	5.3	5.3	19	3.4
C 32 2_9.3	9.3	1.1	—	—	3.9	3.9	5.1	5.1	19	3.3
C 32 2_11.2	11.2	0.83	—	—	3.7	3.6	4.9	4.9	19	3.0
C 32 2_12.3	12.3	0.60	2.1	2.1	3.4	3.4	4.7	4.7	18	2.8
C 32 2_14.1	14.1	0.61	2.1	2.1	3.5	3.4	4.7	4.7	18	2.8
C 32 2_15.6	15.6	0.46	1.9	1.9	3.3	3.2	4.5	4.5	18	2.7
C 32 2_18.2	18.2	0.42	1.9	1.9	3.3	3.2	4.5	4.5	18	2.6
C 32 2_20.1	20.1	0.34	1.8	1.8	3.2	3.1	4.4	4.4	18	2.6
C 32 2_22.9	22.9	0.31	1.8	1.8	3.2	3.1	4.4	4.4	17	2.5
C 32 2_25.1	25.1	0.25	1.7	1.7	3.1	3.0	4.3	4.3	17	2.5
C 32 2_26.9	26.9	0.24	1.7	1.7	3.1	3.0	4.3	4.3	—	2.5
C 32 2_29.8	29.8	0.19	1.7	1.7	3.0	3.0	4.3	4.3	—	2.4
C 32 2_33.1	33.1	0.19	1.7	1.7	3.0	3.0	4.3	4.3	—	2.4
C 32 2_36.1	36.1	0.14	1.6	1.6	3.0	2.9	4.2	4.2	—	2.4
C 32 2_40.7	40.7	0.14	1.6	1.6	3.0	2.9	4.2	4.2	—	2.4
C 32 2_45.3	45.3	0.10	1.6	1.6	3.0	2.9	4.2	4.2	—	2.3
C 32 2_52.4	52.4	0.08	1.6	1.6	2.9	2.9	4.2	4.2	—	2.3
C 32 2_59.4	59.4	0.07	1.5	1.5	2.9	2.9	4.2	4.2	—	2.3
C 32 2_66.8	66.8	0.05	1.5	1.5	2.9	2.8	4.1	4.1	—	2.3
C 32 3_74.7	74.7	0.06	1.5	1.5	2.9	2.9	4.1	4.1	—	0.96
C 32 3_82.6	82.6	0.06	1.5	1.5	2.9	2.8	4.1	4.1	—	0.96
C 32 3_94.2	94.2	0.06	1.5	1.5	2.9	2.8	4.1	4.1	—	0.96
C 32 3_103.3	103.3	0.05	1.5	1.5	2.9	2.8	4.1	4.1	—	0.95
C 32 3_110.6	110.6	0.05	1.5	1.5	2.9	2.8	4.1	4.1	—	0.95
C 32 3_122.4	122.4	0.05	1.5	1.5	2.9	2.8	4.1	4.1	—	0.95
C 32 3_136.0	136.0	0.05	1.5	1.5	2.9	2.8	4.1	4.1	—	0.95
C 32 3_148.4	148.4	0.05	1.5	1.5	2.9	2.8	4.1	4.1	—	0.95
C 32 3_167.4	167.4	0.05	1.5	1.5	2.9	2.8	4.1	4.1	—	0.95
C 32 3_186.0	186.0	0.04	1.5	1.5	2.9	2.8	4.1	4.1	—	0.94
C 32 3_215.6	215.6	0.04	1.5	1.5	2.9	2.8	4.1	4.1	—	0.94
C 32 3_244.2	244.2	0.04	1.5	1.5	2.9	2.8	4.1	4.1	—	0.94
C 32 3_274.7	274.7	0.04	1.5	1.5	2.9	2.8	4.1	4.1	—	0.94

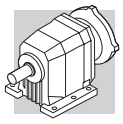

C 32

	i	J (•10-4) [kgm2]											
		SERVO											
		60A		60B 80A		95A		80C 95B 110A		95C 110B		130A	
		SK	SC	SK	SC	SK	SC	SK	SC	SK	SC	SK	SC
C 32 2_2.9	2.9	—	—	—	—	—	—	5.2	5.7	5.1	6.1	5.1	6.1
C 32 2_3.4	3.4	—	—	—	—	—	—	4.6	5.1	4.6	5.6	4.6	5.6
C 32 2_3.7	3.7	—	—	—	—	—	—	4.4	4.9	4.3	5.3	4.3	5.3
C 32 2_4.5	4.5	—	—	—	—	—	—	4.0	4.5	4.0	5.0	4.0	5.0
C 32 2_5.0	5.0	1.1	1.4	1.2	1.6	3.7	4.1	3.7	4.2	3.7	4.7	3.7	4.7
C 32 2_5.7	5.7	1.1	1.4	1.1	1.5	3.6	4.1	3.7	4.2	3.6	4.6	3.6	4.6
C 32 2_6.3	6.3	0.90	1.2	0.92	1.4	3.5	3.9	3.5	4.0	3.4	4.4	3.4	4.4
C 32 2_7.2	7.2	—	—	—	—	—	—	4.4	4.9	4.3	5.3	4.3	5.3
C 32 2_8.5	8.5	—	—	—	—	—	—	4.1	4.6	4.0	5.0	4.0	5.0
C 32 2_9.3	9.3	—	—	—	—	—	—	3.9	4.4	3.9	4.9	3.9	4.9
C 32 2_11.2	11.2	—	—	—	—	—	—	3.7	4.2	3.6	4.6	3.6	4.6
C 32 2_12.3	12.3	0.87	1.1	0.89	1.3	3.4	3.9	3.4	3.9	3.4	4.4	3.4	4.4
C 32 2_14.1	14.1	0.88	1.1	0.90	1.3	3.4	3.9	3.5	4.0	3.4	4.4	3.4	4.4
C 32 2_15.6	15.6	0.73	0.99	0.75	1.2	3.3	3.7	3.3	3.8	3.2	4.2	3.2	4.2
C 32 2_18.2	18.2	0.69	0.95	0.71	1.1	3.2	3.7	3.3	3.8	3.2	4.2	3.2	4.2
C 32 2_20.1	20.1	0.61	0.87	0.63	1.1	3.2	3.6	3.2	3.7	3.1	4.1	3.1	4.1
C 32 2_22.9	22.9	0.58	0.84	0.60	1.0	3.1	3.6	3.2	3.7	3.1	4.1	3.1	4.1
C 32 2_25.1	25.1	0.52	0.78	0.54	0.98	3.1	3.5	3.1	3.6	3.0	4.0	3.0	4.0
C 32 2_26.9	26.9	0.51	0.77	0.53	0.97	3.1	3.5	3.1	3.6	3.0	4.0	3.0	4.0
C 32 2_29.8	29.8	0.46	0.72	0.48	0.92	3.0	3.4	3.0	3.5	3.0	4.0	3.0	4.0
C 32 2_33.1	33.1	0.46	0.72	0.48	0.92	3.0	3.4	3.0	3.5	3.0	4.0	3.0	4.0
C 32 2_36.1	36.1	0.41	0.67	0.43	0.87	3.0	3.4	3.0	3.5	2.9	3.9	2.9	3.9
C 32 2_40.7	40.7	0.41	0.67	0.43	0.87	3.0	3.4	3.0	3.5	2.9	3.9	2.9	3.9
C 32 2_45.3	45.3	0.37	0.63	0.39	0.83	2.9	3.4	3.0	3.5	2.9	3.9	2.9	3.9
C 32 2_52.4	52.4	0.35	0.61	0.37	0.81	2.9	3.3	2.9	3.4	2.9	3.9	2.9	3.9
C 32 2_59.4	59.4	0.34	0.60	0.36	0.80	2.9	3.3	2.9	3.4	2.9	3.9	2.9	3.9
C 32 2_66.8	66.8	0.32	0.58	0.34	0.78	2.9	3.3	2.9	3.4	2.8	3.8	2.8	3.8
C 32 3_74.7	74.7	0.33	0.59	0.35	0.79	2.9	3.3	2.9	3.4	2.9	3.9	—	—
C 32 3_82.6	82.6	0.33	0.59	0.35	0.79	2.9	3.3	2.9	3.4	2.8	3.8	—	—
C 32 3_94.2	94.2	0.33	0.59	0.35	0.79	2.9	3.3	2.9	3.4	2.8	3.8	—	—
C 32 3_103.3	103.3	0.32	0.58	0.34	0.78	2.9	3.3	2.9	3.4	2.8	3.8	—	—
C 32 3_110.6	110.6	0.32	0.58	0.34	0.78	2.9	3.3	2.9	3.4	2.8	3.8	—	—
C 32 3_122.4	122.4	0.32	0.58	0.34	0.78	2.9	3.3	2.9	3.4	2.8	3.8	—	—
C 32 3_136.0	136.0	0.32	0.58	0.34	0.78	2.9	3.3	2.9	3.4	2.8	3.8	—	—
C 32 3_148.4	148.4	0.32	0.58	0.34	0.78	2.9	3.3	2.9	3.4	2.8	3.8	—	—
C 32 3_167.4	167.4	0.32	0.58	0.34	0.78	2.9	3.3	2.9	3.4	2.8	3.8	—	—
C 32 3_186.0	186.0	0.31	0.57	0.33	0.77	2.9	3.3	2.9	3.4	2.8	3.8	—	—
C 32 3_215.6	215.6	0.31	0.57	0.33	0.77	2.9	3.3	2.9	3.4	2.8	3.8	—	—
C 32 3_244.2	244.2	0.31	0.57	0.33	0.77	2.9	3.3	2.9	3.4	2.8	3.8	—	—
C 32 3_274.7	274.7	0.31	0.57	0.33	0.77	2.9	3.3	2.9	3.4	2.8	3.8	—	—

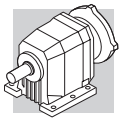

C 36

	i	J (•10-4) [kgm2]								
			IEC							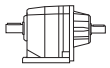
			63	71	80	90	100	112	132	
C 36 2_2.7	2.7	3.6	—	—	6.5	6.4	7.7	7.7	22	14
C 36 2_3.2	3.2	2.5	—	—	5.4	5.3	6.6	6.6	21	13
C 36 2_3.5	3.5	2.4	—	—	5.3	5.2	6.5	6.5	20	13
C 36 2_4.2	4.2	1.6	—	—	4.5	4.4	5.7	5.7	20	12
C 36 2_4.6	4.6	1.5	3.0	3.0	4.4	4.3	5.6	5.6	19	12
C 36 2_5.3	5.3	1.1	2.6	2.6	4.0	3.9	5.2	5.2	19	12
C 36 2_5.8	5.8	0.98	2.5	2.5	3.9	3.8	5.1	5.1	19	12
C 36 2_6.8	6.8	2.2	—	—	5.1	5.0	6.3	6.3	20	13
C 36 2_8.0	8.0	1.6	—	—	4.4	4.3	5.6	5.6	20	12
C 36 2_8.8	8.8	1.5	—	—	4.4	4.3	5.6	5.6	19	12
C 36 2_10.6	10.6	1.1	—	—	3.9	3.8	5.1	5.1	19	12
C 36 2_11.7	11.7	1.0	2.5	2.5	3.9	3.8	5.1	5.1	19	12
C 36 2_13.3	13.3	0.69	2.2	2.2	3.6	3.5	4.8	4.8	19	11
C 36 2_14.8	14.8	0.68	2.2	2.2	3.6	3.5	4.8	4.8	19	11
C 36 2_17.2	17.2	0.47	2.0	2.0	3.4	3.3	4.6	4.6	18	11
C 36 2_19.0	19.0	0.47	2.0	2.0	3.4	3.3	4.6	4.6	18	11
C 36 3_22.1	22.1	1.8	—	—	4.7	4.6	5.9	5.9	19	12
C 36 3_26.2	26.2	1.3	—	—	4.2	4.1	5.4	5.4	19	12
C 36 3_28.7	28.7	1.3	—	—	4.2	4.1	5.4	5.4	19	12
C 36 3_34.6	34.6	0.88	—	—	3.8	3.7	5.0	5.0	19	11
C 36 3_38.1	38.1	0.90	2.4	2.4	3.8	3.7	5.0	5.0	19	11
C 36 3_43.5	43.5	0.59	2.1	2.1	3.5	3.4	4.7	4.7	19	11
C 36 3_48.2	48.2	0.60	2.1	2.1	3.5	3.4	4.7	4.7	19	11
C 36 3_56.2	56.2	0.41	1.9	1.9	3.3	3.2	4.5	4.5	18	11
C 36 3_62.0	62.0	0.42	1.9	1.9	3.3	3.2	4.5	4.5	18	11
C 36 3_70.8	70.8	0.30	1.8	1.8	3.2	3.1	4.4	4.4	18	11
C 36 3_77.6	77.6	0.28	1.8	1.8	3.2	3.1	4.4	4.4	17	11
C 36 3_83.1	83.1	0.24	1.7	1.7	3.1	3.0	4.3	4.3	—	11
C 36 3_91.9	91.9	0.21	1.7	1.7	3.1	3.0	4.3	4.3	—	11
C 36 3_102.2	102.2	0.19	1.7	1.7	3.1	3.0	4.3	4.3	—	11
C 36 3_111.5	111.5	0.16	1.7	1.7	3.1	3.0	4.3	4.3	—	11
C 36 3_125.8	125.8	0.14	1.6	1.6	3.0	2.9	4.2	4.2	—	11
C 36 3_139.8	139.8	0.11	1.6	1.6	3.0	2.9	4.2	4.2	—	11
C 36 3_162.0	162.0	0.09	1.6	1.6	3.0	2.9	4.2	4.2	—	11
C 36 3_183.5	183.5	0.07	1.6	1.6	3.0	2.9	4.2	4.2	—	11
C 36 3_206.4	206.4	0.06	1.6	1.6	3.0	2.9	4.2	4.2	—	11
C 36 4_230.9	230.9	0.08	—	—	—	—	—	—	—	—
C 36 4_255.0	255.0	0.08	1.6	1.6	3.0	2.9	4.2	4.2	—	0.90
C 36 4_290.9	290.9	0.07	1.6	1.6	3.0	2.9	4.2	4.2	—	0.89
C 36 4_318.9	318.9	0.07	1.6	1.6	3.0	2.9	4.2	4.2	—	0.89
C 36 4_341.7	341.7	0.07	1.6	1.6	3.0	2.9	4.2	4.2	—	0.89
C 36 4_377.9	377.9	0.07	1.6	1.6	3.0	2.9	4.2	4.2	—	0.89
C 36 4_420.2	420.2	0.06	1.6	1.6	3.0	2.9	4.2	4.2	—	0.88
C 36 4_458.4	458.4	0.06	1.6	1.6	3.0	2.9	4.2	4.2	—	0.88
C 36 4_517.2	517.2	0.06	1.6	1.6	3.0	2.9	4.2	4.2	—	0.88
C 36 4_574.7	574.7	0.06	1.6	1.6	3.0	2.9	4.2	4.2	—	0.88
C 36 4_665.9	665.9	0.06	1.6	1.6	3.0	2.9	4.2	4.2	—	0.88
C 36 4_754.2	754.2	0.06	1.6	1.6	3.0	2.9	4.2	4.2	—	0.88
C 36 4_848.5	848.5	0.06	1.6	1.6	3.0	2.9	4.2	4.2	—	0.88

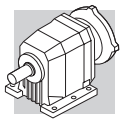

C 36

	i	J (•10-4) [kgm2]											
		SERVO											
		60A		60B 80A		95A		80C 95B 110A		95C 110B		130A	
		SK	SC	SK	SC	SK	SC	SK	SC	SK	SC	SK	SC
C 36 2_2.7	2.7	—	—	—	—	—	—	6.5	7.0	6.4	7.4	6.4	7.4
C 36 2_3.2	3.2	—	—	—	—	—	—	5.4	5.9	5.3	6.3	5.3	6.3
C 36 2_3.5	3.5	—	—	—	—	—	—	5.3	5.8	5.2	6.2	5.2	6.2
C 36 2_4.2	4.2	—	—	—	—	—	—	4.5	5.0	4.4	5.4	4.4	5.4
C 36 2_4.6	4.6	1.8	2.0	1.8	2.2	4.3	4.7	4.4	4.9	4.3	5.3	4.3	5.3
C 36 2_5.3	5.3	1.4	1.6	1.4	1.8	3.9	4.4	4.0	4.5	3.9	4.9	3.9	4.9
C 36 2_5.8	5.8	1.3	1.5	1.3	1.7	3.8	4.2	3.9	4.4	3.8	4.8	3.8	4.8
C 36 2_6.8	6.8	—	—	—	—	—	—	5.1	5.6	5.0	6.0	5.0	6.0
C 36 2_8.0	8.0	—	—	—	—	—	—	4.4	4.9	4.3	5.3	4.3	5.3
C 36 2_8.8	8.8	—	—	—	—	—	—	4.4	4.9	4.3	5.3	4.3	5.3
C 36 2_10.6	10.6	—	—	—	—	—	—	3.9	4.4	3.8	4.8	3.8	4.8
C 36 2_11.7	11.7	1.3	1.5	1.3	1.7	3.8	4.3	3.9	4.4	3.8	4.8	3.8	4.8
C 36 2_13.3	13.3	0.96	1.2	0.98	1.4	3.5	3.9	3.6	4.1	3.5	4.5	3.5	4.5
C 36 2_14.8	14.8	0.95	1.2	0.97	1.4	3.5	3.9	3.6	4.1	3.5	4.5	3.5	4.5
C 36 2_17.2	17.2	0.74	1.0	0.76	1.2	3.3	3.7	3.4	3.9	3.3	4.3	3.3	4.3
C 36 2_19.0	19.0	0.74	1.0	0.76	1.2	3.3	3.7	3.4	3.9	3.3	4.3	3.3	4.3
C 36 3_22.1	22.1	—	—	—	—	—	—	4.7	5.2	4.6	5.6	4.6	5.6
C 36 3_26.2	26.2	—	—	—	—	—	—	4.2	4.7	4.1	5.1	4.1	5.1
C 36 3_28.7	28.7	—	—	—	—	—	—	4.2	4.7	4.1	5.1	4.1	5.1
C 36 3_34.6	34.6	—	—	—	—	—	—	3.8	4.3	3.7	4.7	3.7	4.7
C 36 3_38.1	38.1	1.2	1.4	1.2	1.6	3.7	4.2	3.8	4.3	3.7	4.7	3.7	4.7
C 36 3_43.5	43.5	0.86	1.1	0.88	1.3	3.4	3.8	3.5	4.0	3.4	4.4	3.4	4.4
C 36 3_48.2	48.2	0.87	1.1	0.89	1.3	3.4	3.9	3.5	4.0	3.4	4.4	3.4	4.4
C 36 3_56.2	56.2	0.68	0.94	0.70	1.1	3.2	3.7	3.3	3.8	3.2	4.2	3.2	4.2
C 36 3_62.0	62.0	0.69	0.95	0.71	1.1	3.2	3.7	3.3	3.8	3.2	4.2	3.2	4.2
C 36 3_70.8	70.8	0.57	0.83	0.59	1.0	3.1	3.6	3.2	3.7	3.1	4.1	3.1	4.1
C 36 3_77.6	77.6	0.55	0.81	0.57	1.0	3.1	3.5	3.2	3.7	3.1	4.1	3.1	4.1
C 36 3_83.1	83.1	0.51	0.77	0.53	0.97	3.1	3.5	3.1	3.6	3.0	4.0	3.0	4.0
C 36 3_91.9	91.9	0.48	0.74	0.50	0.94	3.0	3.5	3.1	3.6	3.0	4.0	3.0	4.0
C 36 3_102.2	102.2	0.46	0.72	0.48	0.92	3.0	3.4	3.1	3.6	3.0	4.0	3.0	4.0
C 36 3_111.5	111.5	0.43	0.69	0.45	0.89	3.0	3.4	3.1	3.6	3.0	4.0	3.0	4.0
C 36 3_125.8	125.8	0.41	0.67	0.43	0.87	3.0	3.4	3.0	3.5	2.9	3.9	2.9	3.9
C 36 3_139.8	139.8	0.38	0.64	0.40	0.84	2.9	3.4	3.0	3.5	2.9	3.9	2.9	3.9
C 36 3_162.0	162.0	0.36	0.62	0.38	0.82	2.9	3.3	3.0	3.5	2.9	3.9	2.9	3.9
C 36 3_183.5	183.5	0.34	0.60	0.36	0.80	2.9	3.3	3.0	3.5	2.9	3.9	2.9	3.9
C 36 3_206.4	206.4	0.33	0.59	0.35	0.79	2.9	3.3	3.0	3.5	2.9	3.9	2.9	3.9
C 36 4_230.9	230.9	0.35	0.61	0.37	0.81	2.9	3.3	3.0	3.5	2.9	3.9	—	—
C 36 4_255.0	255.0	0.35	0.61	0.37	0.81	2.9	3.3	3.0	3.5	2.9	3.9	—	—
C 36 4_290.9	290.9	0.34	0.60	0.36	0.80	2.9	3.3	3.0	3.5	2.9	3.9	—	—
C 36 4_318.9	318.9	0.34	0.60	0.36	0.80	2.9	3.3	3.0	3.5	2.9	3.9	—	—
C 36 4_341.7	341.7	0.34	0.60	0.36	0.80	2.9	3.3	3.0	3.5	2.9	3.9	—	—
C 36 4_377.9	377.9	0.34	0.60	0.36	0.80	2.9	3.3	3.0	3.5	2.9	3.9	—	—
C 36 4_420.2	420.2	0.33	0.59	0.35	0.79	2.9	3.3	3.0	3.5	2.9	3.9	—	—
C 36 4_458.4	458.4	0.33	0.59	0.35	0.79	2.9	3.3	3.0	3.5	2.9	3.9	—	—
C 36 4_517.2	517.2	0.33	0.59	0.35	0.79	2.9	3.3	3.0	3.5	2.9	3.9	—	—
C 36 4_574.7	574.7	0.33	0.59	0.35	0.79	2.9	3.3	3.0	3.5	2.9	3.9	—	—
C 36 4_665.9	665.9	0.33	0.59	0.35	0.79	2.9	3.3	3.0	3.5	2.9	3.9	—	—
C 36 4_754.2	754.2	0.33	0.59	0.35	0.79	2.9	3.3	3.0	3.5	2.9	3.9	—	—
C 36 4_848.5	848.5	0.33	0.59	0.35	0.79	2.9	3.3	3.0	3.5	2.9	3.9	—	—

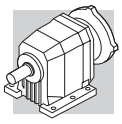

C 41

	i	J (•10-4) [kgm2]								
			IEC							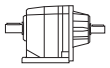
			63	71	80	90	100	112	132	
C 41 2_2.7	2.7	10	—	—	13	13	14	14	29	21
C 41 2_3.6	3.6	6.0	—	—	8.9	8.8	10	10	25	17
C 41 2_4.7	4.7	3.7	—	—	6.6	6.5	7.8	7.8	23	14
C 41 2_6.0	6.0	2.5	—	—	5.4	5.3	6.6	6.6	21	13
C 41 2_6.4	6.4	4.3	—	—	7.2	7.1	8.4	8.4	23	15
C 41 2_7.1	7.1	4.1	—	—	7.0	6.9	8.2	8.2	23	15
C 41 2_8.6	8.6	2.9	—	—	5.8	5.7	7.0	7.0	22	13
C 41 2_9.6	9.6	2.8	—	—	5.7	5.6	6.9	6.9	22	13
C 41 2_11.2	11.2	1.8	—	—	4.7	4.6	5.9	5.9	21	12
C 41 2_12.4	12.4	1.8	—	—	4.7	4.6	5.9	5.9	21	12
C 41 2_14.2	14.2	1.4	2.9	2.9	4.3	4.2	5.5	5.5	20	12
C 41 2_15.8	15.8	1.3	2.8	2.8	4.2	4.1	5.4	5.4	20	12
C 41 2_17.8	17.8	1.0	2.5	2.5	3.9	3.8	5.1	5.1	20	12
C 41 2_19.8	19.8	0.98	2.5	2.5	3.9	3.8	5.1	5.1	20	12
C 41 2_22.6	22.6	0.60	2.1	2.1	3.5	3.4	4.7	4.7	20	11
C 41 2_25.0	25.0	0.60	2.1	2.1	3.5	3.4	4.7	4.7	20	11
C 41 2_28.3	28.3	0.44	1.9	1.9	3.3	3.2	4.5	4.5	19	11
C 41 2_31.4	31.4	0.43	1.9	1.9	3.3	3.2	4.5	4.5	19	11
C 41 2_33.4	33.4	0.34	1.8	1.8	3.2	3.1	4.4	4.4	—	11
C 41 2_37.1	37.1	0.33	1.8	1.8	3.2	3.1	4.4	4.4	—	11
C 41 2_44.8	44.8	0.27	1.8	1.8	3.2	3.1	4.4	4.4	—	11
C 41 3_28.5	28.5	2.5	—	—	5.4	5.3	6.6	6.6	21	13
C 41 3_31.2	31.2	2.5	—	—	5.4	5.3	6.6	6.6	21	13
C 41 3_36.8	36.8	1.6	—	—	4.5	4.4	5.7	5.7	21	12
C 41 3_40.3	40.3	1.6	—	—	4.5	4.4	5.7	5.7	21	12
C 41 3_47.0	47.0	1.2	2.7	2.7	4.1	4.0	5.3	5.3	20	12
C 41 3_51.5	51.5	1.2	2.7	2.7	4.1	4.0	5.3	5.3	20	12
C 41 3_58.7	58.7	0.90	2.4	2.4	3.8	3.7	5.0	5.0	20	11
C 41 3_64.3	64.3	0.90	2.4	2.4	3.8	3.7	5.0	5.0	20	11
C 41 3_74.4	74.4	0.60	2.1	2.1	3.5	3.4	4.7	4.7	20	11
C 41 3_81.5	81.5	0.60	2.1	2.1	3.5	3.4	4.7	4.7	20	11
C 41 3_93.9	93.9	0.40	1.9	1.9	3.3	3.2	4.5	4.5	19	11
C 41 3_102.3	102.3	0.40	1.9	1.9	3.3	3.2	4.5	4.5	19	11
C 41 3_110.1	110.1	0.30	1.8	1.8	3.2	3.1	4.4	4.4	—	11
C 41 3_120.6	120.6	0.30	1.8	1.8	3.2	3.1	4.4	4.4	—	11
C 41 3_132.9	132.9	0.30	1.8	1.8	3.2	3.1	4.4	4.4	—	11
C 41 3_145.6	145.6	0.30	1.8	1.8	3.2	3.1	4.4	4.4	—	11
C 41 3_164.1	164.1	0.20	1.7	1.7	3.1	3.0	4.3	4.3	—	11
C 41 3_179.9	179.9	0.20	1.7	1.7	3.1	3.0	4.3	4.3	—	11
C 41 3_190.8	190.8	0.10	1.6	1.6	3.0	2.9	4.2	4.2	—	11
C 41 3_209.1	209.1	0.10	1.6	1.6	3.0	2.9	4.2	4.2	—	11
C 41 4_239.9	239.9	0.15	1.7	1.7	3.1	3.0	4.3	4.3	—	2.1
C 41 4_263.0	263.0	0.15	1.7	1.7	3.1	3.0	4.3	4.3	—	2.1
C 41 4_304.2	304.2	0.13	1.6	1.6	3.0	2.9	4.2	4.2	—	2.0
C 41 4_333.4	333.4	0.13	1.6	1.6	3.0	2.9	4.2	4.2	—	2.0
C 41 4_382.0	382.0	0.12	1.6	1.6	3.0	2.9	4.2	4.2	—	2.0
C 41 4_419.0	419.0	0.12	1.6	1.6	3.0	2.9	4.2	4.2	—	2.0
C 41 4_450.2	450.2	0.12	1.6	1.6	3.0	2.9	4.2	4.2	—	2.0
C 41 4_493.5	493.5	0.12	1.6	1.6	3.0	2.9	4.2	4.2	—	2.0
C 41 4_543.5	543.5	0.12	1.6	1.6	3.0	2.9	4.2	4.2	—	2.0
C 41 4_595.8	595.8	0.12	1.6	1.6	3.0	2.9	4.2	4.2	—	2.0
C 41 4_671.3	671.3	0.10	1.6	1.6	3.0	2.9	4.2	4.2	—	2.0
C 41 4_735.9	735.9	0.10	1.6	1.6	3.0	2.9	4.2	4.2	—	2.0
C 41 4_780.4	780.4	0.10	1.6	1.6	3.0	2.9	4.2	4.2	—	2.0
C 41 4_855.5	855.5	0.10	1.6	1.6	3.0	2.9	4.2	4.2	—	2.0

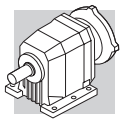

C 41

	i	J (•10-4) [kgm2]																	
		SERVO																	
		60A		60B 80A		80B		95A		80C 95B 110A		95C 110B		130A		130B 180A		180B	
		SK	SC	SK	SC	SK	SC	SK	SC	SK	SC	SK	SC	SK	SC	SK	SC	SK	SC
C 41 2_2.7	2.7	—	—	—	—	—	—	—	—	13	14	13	14	13	14	27	29	29	34
C 41 2_3.6	3.6	—	—	—	—	—	—	—	—	8.9	9.4	8.8	9.8	8.8	9.8	23	25	25	30
C 41 2_4.7	4.7	—	—	—	—	—	—	—	—	6.6	7.1	6.5	7.5	6.5	7.5	21	23	23	28
C 41 2_6.0	6.0	—	—	—	—	5.3	5.8	5.3	5.8	5.4	5.9	5.3	6.3	5.3	6.3	19	22	21	26
C 41 2_6.4	6.4	—	—	—	—	—	—	—	—	7.2	7.7	7.1	8.1	7.1	8.1	21	24	23	28
C 41 2_7.1	7.1	—	—	—	—	—	—	—	—	7.0	7.5	6.9	7.9	6.9	7.9	21	24	23	28
C 41 2_8.6	8.6	—	—	—	—	—	—	—	—	5.8	6.3	5.7	6.7	5.7	6.7	20	22	22	27
C 41 2_9.6	9.6	—	—	—	—	—	—	—	—	5.7	6.2	5.6	6.6	5.6	6.6	20	22	22	27
C 41 2_11.2	11.2	—	—	—	—	—	—	—	—	4.7	5.2	4.6	5.6	4.6	5.6	19	21	21	26
C 41 2_12.4	12.4	—	—	—	—	—	—	—	—	4.7	5.2	4.6	5.6	4.6	5.6	19	21	21	26
C 41 2_14.2	14.2	—	—	—	—	4.2	4.7	4.2	4.7	4.3	4.8	4.2	5.2	4.2	5.2	18	21	20	25
C 41 2_15.8	15.8	—	—	—	—	4.1	4.6	4.1	4.6	4.2	4.7	4.1	5.1	4.1	5.1	18	21	20	25
C 41 2_17.8	17.8	—	—	—	—	3.8	5.3	3.8	5.3	3.9	4.4	3.8	4.8	3.8	4.8	18	20	20	25
C 41 2_19.8	19.8	—	—	—	—	3.8	4.2	3.8	4.2	3.9	4.4	3.8	4.8	3.8	4.8	18	20	20	25
C 41 2_22.6	22.6	—	—	—	—	3.4	3.9	3.4	3.9	3.5	4.0	3.4	4.4	3.4	4.4	18	20	20	25
C 41 2_25.0	25.0	—	—	—	—	3.4	3.9	3.4	3.9	3.5	4.0	3.4	4.4	3.4	4.4	18	20	20	25
C 41 2_28.3	28.3	—	—	—	—	3.3	3.7	3.3	3.7	3.3	3.8	3.2	4.2	3.2	4.2	17	20	19	24
C 41 2_31.4	31.4	—	—	—	—	3.3	3.7	3.3	3.7	3.3	3.8	3.2	4.2	3.2	4.2	17	20	19	24
C 41 2_33.4	33.4	—	—	—	—	3.2	3.6	3.2	3.6	3.2	3.7	3.1	4.1	3.1	4.1	—	—	—	—
C 41 2_37.1	37.1	—	—	—	—	3.2	3.6	3.2	3.6	3.2	3.7	3.1	4.1	3.1	4.1	—	—	—	—
C 41 2_44.8	44.8	—	—	—	—	3.1	3.5	3.1	3.5	3.2	3.7	3.1	4.1	3.1	4.1	—	—	—	—
C 41 3_28.5	28.5	—	—	—	—	—	—	—	—	5.4	5.9	5.3	6.3	5.3	6.3	19	22	21	26
C 41 3_31.2	31.2	—	—	—	—	—	—	—	—	5.4	5.9	5.3	6.3	5.3	6.3	19	22	21	26
C 41 3_36.8	36.8	—	—	—	—	—	—	—	—	4.5	5.0	4.4	5.4	4.4	5.4	19	21	21	26
C 41 3_40.3	40.3	—	—	—	—	—	—	—	—	4.5	5.0	4.4	5.4	4.4	5.4	19	21	21	26
C 41 3_47.0	47.0	—	—	—	—	4.0	4.5	4.0	4.5	4.1	4.6	4.0	5.0	4.0	5.0	18	21	20	25
C 41 3_51.5	51.5	—	—	—	—	4.0	4.5	4.0	4.5	4.1	4.6	4.0	5.0	4.0	5.0	18	21	20	25
C 41 3_58.7	58.7	—	—	—	—	3.7	4.2	3.7	4.2	3.8	4.3	3.7	4.7	3.7	4.7	18	20	20	25
C 41 3_64.3	64.3	—	—	—	—	3.7	4.2	3.7	4.2	3.8	4.3	3.7	4.7	3.7	4.7	18	20	20	25
C 41 3_74.4	74.4	—	—	—	—	3.4	3.9	3.4	3.9	3.5	4.0	3.4	4.4	3.4	4.4	18	20	20	25
C 41 3_81.5	81.5	—	—	—	—	3.4	3.9	3.4	3.9	3.5	4.0	3.4	4.4	3.4	4.4	18	20	20	25
C 41 3_93.9	93.9	—	—	—	—	3.2	3.7	3.2	3.7	3.3	3.8	3.2	4.2	3.2	4.2	17	20	19	24
C 41 3_102.3	102.3	—	—	—	—	3.2	3.7	3.2	3.7	3.3	3.8	3.2	4.2	3.2	4.2	17	20	19	24
C 41 3_110.1	110.1	—	—	—	—	3.1	3.6	3.1	3.6	3.2	3.7	3.1	4.1	3.1	4.1	—	—	—	—
C 41 3_120.6	120.6	—	—	—	—	3.1	3.6	3.1	3.6	3.2	3.7	3.1	4.1	3.1	4.1	—	—	—	—
C 41 3_132.9	132.9	—	—	—	—	3.1	3.6	3.1	3.6	3.2	3.7	3.1	4.1	3.1	4.1	—	—	—	—
C 41 3_145.6	145.6	—	—	—	—	3.1	3.6	3.1	3.6	3.2	3.7	3.1	4.1	3.1	4.1	—	—	—	—
C 41 3_164.1	164.1	—	—	—	—	3.0	3.5	3.0	3.5	3.1	3.6	3.0	4.0	3.0	4.0	—	—	—	—
C 41 3_179.9	179.9	—	—	—	—	3.0	3.5	3.0	3.5	3.1	3.6	3.0	4.0	3.0	4.0	—	—	—	—
C 41 3_190.8	190.8	—	—	—	—	2.9	3.4	2.9	3.4	3.0	3.5	2.9	3.9	2.9	3.9	—	—	—	—
C 41 3_209.1	209.1	—	—	—	—	2.9	3.4	2.9	3.4	3.0	3.5	2.9	3.9	2.9	3.9	—	—	—	—
C 41 4_239.9	239.9	0.42	0.68	0.44	0.88	—	—	3.0	3.4	3.1	3.6	3.0	4.0	—	—	—	—	—	—
C 41 4_263.0	263.0	0.42	0.68	0.44	0.88	—	—	3.0	3.4	3.1	3.6	3.0	4.0	—	—	—	—	—	—
C 41 4_304.2	304.2	0.40	0.66	0.42	0.86	—	—	3.0	3.4	3.0	3.5	2.9	3.9	—	—	—	—	—	—
C 41 4_333.4	333.4	0.40	0.66	0.42	0.86	—	—	3.0	3.4	3.0	3.5	2.9	3.9	—	—	—	—	—	—
C 41 4_382.0	382.0	0.39	0.65	0.41	0.85	—	—	2.9	3.4	3.0	3.5	2.9	3.9	—	—	—	—	—	—
C 41 4_419.0	419.0	0.39	0.65	0.41	0.85	—	—	2.9	3.4	3.0	3.5	2.9	3.9	—	—	—	—	—	—
C 41 4_450.2	450.2	0.39	0.65	0.41	0.85	—	—	2.9	3.4	3.0	3.5	2.9	3.9	—	—	—	—	—	—
C 41 4_493.5	493.5	0.39	0.65	0.41	0.85	—	—	2.9	3.4	3.0	3.5	2.9	3.9	—	—	—	—	—	—
C 41 4_543.5	543.5	0.39	0.65	0.41	0.85	—	—	2.9	3.4	3.0	3.5	2.9	3.9	—	—	—	—	—	—
C 41 4_595.8	595.8	0.39	0.65	0.41	0.85	—	—	2.9	3.4	3.0	3.5	2.9	3.9	—	—	—	—	—	—
C 41 4_671.3	671.3	0.37	0.63	0.39	0.83	—	—	2.9	3.4	3.0	3.5	2.9	3.9	—	—	—	—	—	—
C 41 4_735.9	735.9	0.37	0.63	0.39	0.83	—	—	2.9	3.4	3.0	3.5	2.9	3.9	—	—	—	—	—	—
C 41 4_780.4	780.4	0.37	0.63	0.39	0.83	—	—	2.9	3.4	3.0	3.5	2.9	3.9	—	—	—	—	—	—
C 41 4_855.5	855.5	0.37	0.63	0.39	0.83	—	—	2.9	3.4	3.0	3.5	2.9	3.9	—	—	—	—	—	—

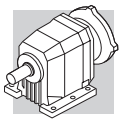

C 51

	i	J (•10-4) [kgm2]										
			IEC									
			63	71	80	90	100	112	132	160	180	
C 51 2_2.6	2.6	15	—	—	17	17	19	19	33	79	76	25
C 51 2_3.3	3.3	10	—	—	13	13	14	14	29	75	72	21
C 51 2_4.5	4.5	6.3	—	—	9.2	9.1	10	10	25	71	68	17
C 51 2_5.6	5.6	4.1	—	—	7.0	6.9	8.2	8.2	23	69	66	15
C 51 2_7.0	7.0	8.1	—	—	11	11	12	12	27	73	70	19
C 51 2_7.8	7.8	7.8	—	—	11	11	12	12	27	73	70	18
C 51 2_8.8	8.8	6.0	—	—	8.9	8.8	10	10	25	71	68	17
C 51 2_9.8	9.8	5.8	—	—	8.7	8.6	9.9	9.9	25	71	68	16
C 51 2_11.8	11.8	4.1	—	—	7.0	6.9	8.2	8.2	23	69	66	15
C 51 2_13.1	13.1	4.0	—	—	6.9	6.8	8.1	8.1	23	69	66	15
C 51 2_15.0	15.0	2.7	—	—	5.6	5.5	6.8	6.8	22	68	65	13
C 51 2_16.6	16.6	2.6	—	—	5.5	5.4	6.7	6.7	22	68	65	13
C 51 2_18.9	18.9	2.0	3.5	3.5	4.9	4.8	6.1	6.1	21	67	64	13
C 51 2_21.0	21.0	1.9	3.4	3.4	4.8	4.7	6.0	6.0	21	67	64	12
C 51 2_23.4	23.4	1.5	3.0	3.0	4.4	4.3	5.6	5.6	20	66	63	12
C 51 2_25.9	25.9	1.4	2.9	2.9	4.3	4.2	5.5	5.5	20	66	63	12
C 51 2_29.8	29.8	0.90	2.4	2.4	3.8	3.7	5.0	5.0	20	66	63	11
C 51 2_33.0	33.0	0.90	2.4	2.4	3.8	3.7	5.0	5.0	20	66	63	11
C 51 2_36.4	36.4	0.70	2.2	2.2	3.6	3.5	4.8	4.8	20	66	63	11
C 51 2_40.4	40.4	0.70	2.2	2.2	3.6	3.5	4.8	4.8	20	66	63	11
C 51 2_43.1	43.1	0.50	2.0	2.0	3.4	3.3	4.6	4.6	—	—	—	11
C 51 2_47.8	47.8	0.50	2.0	2.0	3.4	3.3	4.6	4.6	—	—	—	11
C 51 2_51.4	51.4	0.40	1.9	1.9	3.3	3.2	4.5	4.5	—	—	—	11
C 51 2_57.0	57.0	0.40	1.9	1.9	3.3	3.2	4.5	4.5	—	—	—	11
C 51 3_21.8	21.8	6.8	—	—	9.7	9.6	11	11	26	72	69	17
C 51 3_23.9	23.9	6.8	—	—	9.7	9.6	11	11	26	72	69	17
C 51 3_27.4	27.4	5.2	—	—	8.1	8.0	9.3	9.3	24	70	67	16
C 51 3_30.1	30.1	5.2	—	—	8.1	8.0	9.3	9.3	24	70	67	16
C 51 3_37.0	37.0	3.6	—	—	6.5	6.4	7.7	7.7	23	69	66	14
C 51 3_40.5	40.5	3.6	—	—	6.5	6.4	7.7	7.7	23	69	66	14
C 51 3_46.7	46.7	2.4	—	—	5.3	5.2	6.5	6.5	21	67	64	13
C 51 3_51.2	51.2	2.4	—	—	5.3	5.2	6.5	6.5	21	67	64	13
C 51 3_59.0	59.0	1.8	3.3	3.3	4.7	4.6	5.9	5.9	21	67	64	12
C 51 3_64.6	64.6	1.8	3.3	3.3	4.7	4.6	5.9	5.9	21	67	64	12
C 51 3_72.9	72.9	1.3	2.8	2.8	4.2	4.1	5.4	5.4	20	66	63	12
C 51 3_79.9	79.9	1.3	2.8	2.8	4.2	4.1	5.4	5.4	20	66	63	12
C 51 3_93.0	93.0	0.80	2.3	2.3	3.7	3.6	4.9	4.9	20	66	63	11
C 51 3_101.8	101.8	0.80	2.3	2.3	3.7	3.6	4.9	4.9	20	66	63	11
C 51 3_113.6	113.6	0.60	2.1	2.1	3.5	3.4	4.7	4.7	20	66	63	11
C 51 3_124.4	124.4	0.60	2.1	2.1	3.5	3.4	4.7	4.7	20	66	63	11
C 51 3_134.6	134.6	0.50	2.0	2.0	3.4	3.3	4.6	4.6	—	—	—	11
C 51 3_147.4	147.4	0.50	2.0	2.0	3.4	3.3	4.6	4.6	—	—	—	11
C 51 3_160.5	160.5	0.40	1.9	1.9	3.3	3.2	4.5	4.5	—	—	—	11
C 51 3_175.8	175.8	0.40	1.9	1.9	3.3	3.2	4.5	4.5	—	—	—	11
C 51 3_197.9	197.9	0.30	1.8	1.8	3.2	3.1	4.4	4.4	—	—	—	11
C 51 3_216.7	216.7	0.30	1.8	1.8	3.2	3.1	4.4	4.4	—	—	—	11
C 51 4_240.9	240.9	0.30	1.8	1.8	3.2	3.1	4.4	4.4	—	—	—	1.2
C 51 4_263.8	263.8	0.30	1.8	1.8	3.2	3.1	4.4	4.4	—	—	—	1.2
C 51 4_297.8	297.8	0.30	1.8	1.8	3.2	3.1	4.4	4.4	—	—	—	1.2
C 51 4_326.1	326.1	0.30	1.8	1.8	3.2	3.1	4.4	4.4	—	—	—	1.2
C 51 4_380.0	380.0	0.20	1.7	1.7	3.1	3.0	4.3	4.3	—	—	—	1.1
C 51 4_416.0	416.0	0.20	1.7	1.7	3.1	3.0	4.3	4.3	—	—	—	1.1
C 51 4_463.9	463.9	0.20	1.7	1.7	3.1	3.0	4.3	4.3	—	—	—	1.1
C 51 4_508.0	508.0	0.20	1.7	1.7	3.1	3.0	4.3	4.3	—	—	—	1.1
C 51 4_549.7	549.7	0.20	1.7	1.7	3.1	3.0	4.3	4.3	—	—	—	1.1
C 51 4_602.0	602.0	0.20	1.7	1.7	3.1	3.0	4.3	4.3	—	—	—	1.1
C 51 4_655.4	655.4	0.20	1.7	1.7	3.1	3.0	4.3	4.3	—	—	—	1.1
C 51 4_717.7	717.7	0.20	1.7	1.7	3.1	3.0	4.3	4.3	—	—	—	1.1
C 51 4_808.0	808.0	0.20	1.7	1.7	3.1	3.0	4.3	4.3	—	—	—	1.1
C 51 4_884.9	884.9	0.20	1.7	1.7	3.1	3.0	4.3	4.3	—	—	—	1.1

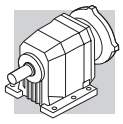

C 51

	i	J (•10-4) [kgm2]											
		SERVO											
		80B		95A		80C 95B 110A		95C 110B 130A		130B 180A		180B	
		SK	SC	SK	SC	SK	SC	SK	SC	SK	SC	SK	SC
C 51 2_2.6	2.6	—	—	—	—	17	18	17	18	32	34	33	38
C 51 2_3.3	3.3	—	—	—	—	13	14	13	14	27	29	29	34
C 51 2_4.5	4.5	—	—	—	—	9.2	9.7	9.1	10	23	26	25	30
C 51 2_5.6	5.6	—	—	—	—	7.0	7.5	6.9	7.9	21	24	23	28
C 51 2_7.0	7.0	—	—	—	—	11	12	11	12	25	28	27	32
C 51 2_7.8	7.8	—	—	—	—	11	12	11	12	25	27	27	32
C 51 2_8.8	8.8	—	—	—	—	8.9	9.4	8.8	9.8	23	25	25	30
C 51 2_9.8	9.8	—	—	—	—	8.7	9.2	8.6	9.6	23	25	25	30
C 51 2_11.8	11.8	—	—	—	—	7.0	7.5	6.9	7.9	21	24	23	28
C 51 2_13.1	13.1	—	—	—	—	6.9	7.4	6.8	7.8	21	23	23	28
C 51 2_15.0	15.0	—	—	—	—	5.6	6.1	5.5	6.5	20	22	22	27
C 51 2_16.6	16.6	—	—	—	—	5.5	6.0	5.4	6.4	20	22	22	27
C 51 2_18.9	18.9	4.8	5.3	4.8	5.3	4.9	5.4	4.8	5.8	19	21	21	26
C 51 2_21.0	21.0	4.7	5.2	4.7	5.2	4.8	5.3	4.7	5.7	19	21	21	26
C 51 2_23.4	23.4	4.3	4.8	4.3	4.8	4.4	4.3	4.3	5.3	18	21	20	25
C 51 2_25.9	25.9	4.2	4.7	4.2	4.7	4.3	4.8	4.2	5.2	18	21	20	25
C 51 2_29.8	29.8	3.7	4.2	3.7	4.2	3.8	4.3	3.7	4.7	18	20	20	25
C 51 2_33.0	33.0	3.7	4.2	3.7	4.2	3.8	4.3	3.7	4.7	18	20	20	25
C 51 2_36.4	36.4	3.5	4.0	3.5	4.0	3.6	4.1	3.5	4.5	18	20	20	25
C 51 2_40.4	40.4	3.5	4.0	3.5	4.0	3.6	4.1	3.5	4.5	18	20	20	25
C 51 2_43.1	43.1	3.3	3.8	3.3	3.8	3.4	3.9	3.3	4.3	—	—	—	—
C 51 2_47.8	47.8	3.3	3.8	3.3	3.8	3.4	3.9	3.3	4.3	—	—	—	—
C 51 2_51.4	51.4	3.2	3.7	3.2	3.7	3.3	3.8	3.2	4.2	—	—	—	—
C 51 2_57.0	57.0	3.2	3.7	3.2	3.7	3.3	3.8	3.2	4.2	—	—	—	—
C 51 3_21.8	21.8	—	—	—	—	9.7	10	9.6	11	24	26	26	31
C 51 3_23.9	23.9	—	—	—	—	9.7	10	9.6	11	24	26	26	31
C 51 3_27.4	27.4	—	—	—	—	8.1	8.6	8.0	9.0	22	25	24	29
C 51 3_30.1	30.1	—	—	—	—	8.1	8.6	8.0	9.0	22	25	24	29
C 51 3_37.0	37.0	—	—	—	—	6.5	7.0	6.4	7.4	21	23	23	28
C 51 3_40.5	40.5	—	—	—	—	6.5	7.0	6.4	7.4	21	23	23	28
C 51 3_46.7	46.7	—	—	—	—	5.3	5.8	5.2	6.2	19	22	21	26
C 51 3_51.2	51.2	—	—	—	—	5.3	5.8	5.2	6.2	19	22	21	26
C 51 3_59.0	59.0	4.6	5.1	4.6	5.1	4.7	5.2	4.6	5.6	19	21	21	26
C 51 3_64.6	64.6	4.6	5.1	4.6	5.1	4.7	5.2	4.6	5.6	19	21	21	26
C 51 3_72.9	72.9	4.1	4.6	4.1	4.6	4.2	5.2	4.1	5.1	18	21	20	25
C 51 3_79.9	79.9	4.1	4.6	4.1	4.6	4.2	5.2	4.1	5.1	18	21	20	25
C 51 3_93.0	93.0	3.6	4.1	3.6	4.1	3.7	4.2	3.6	4.6	18	20	20	25
C 51 3_101.8	101.8	3.6	4.1	3.6	4.1	3.7	4.2	3.6	4.6	18	20	20	25
C 51 3_113.6	113.6	3.4	3.9	3.4	3.9	3.5	4.0	3.4	4.4	18	20	20	25
C 51 3_124.4	124.4	3.4	3.9	3.4	3.9	3.5	4.0	3.4	4.4	18	20	20	25
C 51 3_134.6	134.6	3.3	3.8	3.3	3.8	3.4	3.9	3.3	4.3	—	—	—	—
C 51 3_147.4	147.4	3.3	3.8	3.3	3.8	3.4	3.9	3.3	4.3	—	—	—	—
C 51 3_160.5	160.5	3.2	3.7	3.2	3.7	3.3	3.8	3.2	4.2	—	—	—	—
C 51 3_175.8	175.8	3.2	3.7	3.2	3.7	3.3	3.8	3.2	4.2	—	—	—	—
C 51 3_197.9	197.9	3.1	3.6	3.1	3.6	3.2	3.7	3.1	4.1	—	—	—	—
C 51 3_216.7	216.7	3.1	3.6	3.1	3.6	3.2	3.7	3.1	4.1	—	—	—	—
C 51 4_240.9	240.9	—	—	3.1	3.6	3.2	3.7	3.1	4.1	—	—	—	—
C 51 4_263.8	263.8	—	—	3.1	3.6	3.2	3.7	3.1	4.1	—	—	—	—
C 51 4_297.8	297.8	—	—	3.1	3.6	3.2	3.7	3.1	4.1	—	—	—	—
C 51 4_326.1	326.1	—	—	3.1	3.6	3.2	3.7	3.1	4.1	—	—	—	—
C 51 4_380.0	380.0	—	—	3.0	3.5	3.1	3.6	3.0	4.0	—	—	—	—
C 51 4_416.0	416.0	—	—	3.0	3.5	3.1	3.6	3.0	4.0	—	—	—	—
C 51 4_463.9	463.9	—	—	3.0	3.5	3.1	3.6	3.0	4.0	—	—	—	—
C 51 4_508.0	508.0	—	—	3.0	3.5	3.1	3.6	3.0	4.0	—	—	—	—
C 51 4_549.7	549.7	—	—	3.0	3.5	3.1	3.6	3.0	4.0	—	—	—	—
C 51 4_602.0	602.0	—	—	3.0	3.5	3.1	3.6	3.0	4.0	—	—	—	—
C 51 4_655.4	655.4	—	—	3.0	3.5	3.1	3.6	3.0	4.0	—	—	—	—
C 51 4_717.7	717.7	—	—	3.0	3.5	3.1	3.6	3.0	4.0	—	—	—	—
C 51 4_808.0	808.0	—	—	3.0	3.5	3.1	3.6	3.0	4.0	—	—	—	—
C 51 4_884.9	884.9	—	—	3.0	3.5	3.1	3.6	3.0	4.0	—	—	—	—

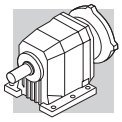

C 61

	i	J (•10-4) [kgm2]										
			IEC									
			63	71	80	90	100	112	132	160	180	
C 61 2_2.8	2.8	30	—	—	—	—	—	—	49	78	76	52
C 61 2_3.7	3.7	19	—	—	22	22	23	23	38	78	76	41
C 61 2_4.6	4.6	14	—	—	17	17	18	18	33	78	76	36
C 61 2_6.0	6.0	8.8	—	—	12	12	13	13	28	78	76	31
C 61 2_6.7	6.7	14	—	—	—	—	—	—	33	78	76	36
C 61 2_7.5	7.5	13	—	—	—	—	—	—	32	78	76	35
C 61 2_8.8	8.8	13	—	—	16	16	17	17	32	78	76	35
C 61 2_9.8	9.8	12	—	—	15	15	16	16	31	78	76	34
C 61 2_10.9	10.9	9.6	—	—	13	12	14	14	29	78	76	31
C 61 2_12.1	12.1	9.2	—	—	12	12	13	13	28	78	76	31
C 61 2_14.3	14.3	5.8	—	—	8.7	8.6	9.9	9.9	25	78	76	28
C 61 2_15.9	15.9	5.6	—	—	8.5	8.4	9.7	9.7	25	78	76	27
C 61 2_17.7	17.7	4.4	—	—	7.3	7.2	8.5	8.5	23	78	76	26
C 61 2_19.6	19.6	4.3	—	—	7.2	7.1	8.4	8.4	23	78	76	26
C 61 2_22.4	22.4	3.2	4.7	4.7	6.1	6.0	7.3	7.3	22	78	76	25
C 61 2_24.8	24.8	3.1	4.6	4.6	6.0	5.9	7.2	7.2	22	78	76	25
C 61 2_27.4	27.4	2.1	3.6	3.6	5.0	4.9	6.2	6.2	21	78	76	24
C 61 2_30.4	30.4	2.2	3.7	3.7	5.1	5.0	6.3	6.3	21	78	76	24
C 61 2_34.2	34.2	1.5	3.0	3.0	4.4	4.3	5.6	5.6	20	78	76	23
C 61 2_38.0	38.0	1.5	3.0	3.0	4.4	4.3	5.6	5.6	20	78	76	23
C 61 3_26.8	26.8	10	—	—	13	13	14	14	29	78	76	32
C 61 3_29.4	29.4	10	—	—	13	13	14	14	29	78	76	32
C 61 3_33.0	33.0	8.1	—	—	11	11	12	12	27	78	76	30
C 61 3_36.1	36.1	8.1	—	—	11	11	12	12	27	78	76	30
C 61 3_43.4	43.4	5.0	—	—	7.9	7.8	9.1	9.1	24	78	76	27
C 61 3_47.6	47.6	5.0	—	—	7.9	7.8	9.1	9.1	24	78	76	27
C 61 3_53.5	53.5	3.9	—	—	6.8	6.7	8.0	8.0	23	78	76	26
C 61 3_58.6	58.6	3.8	—	—	6.7	6.6	7.9	7.9	23	78	76	26
C 61 3_67.7	67.7	2.8	4.3	4.3	5.7	5.6	6.9	6.9	22	78	76	25
C 61 3_74.2	74.2	2.8	4.3	4.3	5.7	5.6	6.9	6.9	22	78	76	25
C 61 3_83.0	83.0	1.9	3.4	3.4	4.8	4.7	6.0	6.0	21	78	76	24
C 61 3_91.0	91.0	1.9	3.4	3.4	4.8	4.7	6.0	6.0	21	78	76	24
C 61 3_103.6	103.6	1.3	2.8	2.8	4.2	4.1	5.4	5.4	20	78	76	23
C 61 3_113.6	113.6	1.3	2.8	2.8	4.2	4.1	5.4	5.4	20	78	76	23
C 61 3_128.1	128.1	1.0	2.5	2.5	3.9	3.8	5.1	5.1	20	78	76	23
C 61 3_140.5	140.5	1.0	2.5	2.5	3.9	3.8	5.1	5.1	20	78	76	23
C 61 3_150.0	150.0	0.70	2.2	2.2	3.6	3.5	4.8	4.8	—	—	—	23
C 61 3_164.5	164.5	0.70	2.2	2.2	3.6	3.5	4.8	4.8	—	—	—	23
C 61 3_178.6	178.6	0.60	2.1	2.1	3.5	3.4	4.7	4.7	—	—	—	22
C 61 3_195.8	195.8	0.60	2.1	2.1	3.5	3.4	4.7	4.7	—	—	—	22
C 61 4_217.4	217.4	0.67	2.2	2.2	3.6	3.5	4.8	4.8	—	—	—	11
C 61 4_238.3	238.3	0.67	2.2	2.2	3.6	3.5	4.8	4.8	—	—	—	11
C 61 4_275.3	275.3	0.81	2.3	2.3	3.7	3.6	4.9	4.9	—	—	—	11
C 61 4_301.7	301.7	0.81	2.3	2.3	3.7	3.6	4.9	4.9	—	—	—	11
C 61 4_337.7	337.7	0.56	2.1	2.1	3.5	3.4	4.7	4.7	—	—	—	11
C 61 4_370.1	370.1	0.56	2.1	2.1	3.5	3.4	4.7	4.7	—	—	—	11
C 61 4_421.5	421.5	0.53	2.0	2.0	3.4	3.3	4.6	4.6	—	—	—	11
C 61 4_462.0	462.0	0.53	2.0	2.0	3.4	3.3	4.6	4.6	—	—	—	11
C 61 4_521.1	521.1	0.51	2.0	2.0	3.4	3.3	4.6	4.6	—	—	—	11
C 61 4_571.2	571.2	0.51	2.0	2.0	3.4	3.3	4.6	4.6	—	—	—	11
C 61 4_610.1	610.1	0.49	2.0	2.0	3.4	3.3	4.6	4.6	—	—	—	11
C 61 4_668.8	668.8	0.49	2.0	2.0	3.4	3.3	4.6	4.6	—	—	—	11
C 61 4_726.3	726.3	0.48	2.0	2.0	3.4	3.3	4.6	4.6	—	—	—	11
C 61 4_796.1	796.1	0.48	2.0	2.0	3.4	3.3	4.6	4.6	—	—	—	11

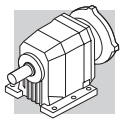

C 61

	i	J (•10-4) [kgm2]											
		SERVO											
		80B		95A		80C 95B 110A		95C 110B 130A		130B 180A		180B	
		SK	SC	SK	SC	SK	SC	SK	SC	SK	SC	SK	SC
C 61 2_2.8	2.8	—	—	—	—	—	—	—	—	47	49	49	54
C 61 2_3.7	3.7	—	—	—	—	22	23	22	23	36	38	38	43
C 61 2_4.6	4.6	—	—	—	—	17	18	17	18	31	33	33	38
C 61 2_6.0	6.0	—	—	—	—	12	13	12	13	26	28	28	33
C 61 2_6.7	6.7	—	—	—	—	—	—	—	—	31	33	33	38
C 61 2_7.5	7.5	—	—	—	—	—	—	—	—	30	32	32	37
C 61 2_8.8	8.8	—	—	—	—	16	17	16	17	30	32	32	37
C 61 2_9.8	9.8	—	—	—	—	15	16	15	16	23	31	31	36
C 61 2_10.9	10.9	—	—	—	—	13	14	12	13	27	29	29	34
C 61 2_12.1	12.1	—	—	—	—	12	13	12	13	26	29	28	33
C 61 2_14.3	14.3	—	—	—	—	8.7	9.2	8.6	9.6	23	25	25	30
C 61 2_15.9	15.9	—	—	—	—	8.5	9.0	8.4	9.4	23	25	25	30
C 61 2_17.7	17.7	—	—	—	—	7.3	7.8	7.2	8.2	21	24	23	28
C 61 2_19.6	19.6	—	—	—	—	7.2	7.7	7.1	8.1	21	24	23	28
C 61 2_22.4	22.4	—	—	6.0	6.5	6.1	6.6	6.0	7.0	20	23	22	27
C 61 2_24.8	24.8	—	—	5.9	6.4	6.0	6.5	5.9	6.9	20	23	22	27
C 61 2_27.4	27.4	—	—	4.9	5.4	5.0	5.5	4.9	5.9	19	22	21	26
C 61 2_30.4	30.4	—	—	5.0	5.5	5.1	5.6	5.0	6.0	19	22	21	26
C 61 2_34.2	34.2	—	—	4.3	4.8	4.4	4.9	4.3	5.3	18	21	20	25
C 61 2_38.0	38.0	—	—	4.3	4.8	4.4	4.9	4.3	5.3	18	21	20	25
C 61 3_26.8	26.8	—	—	—	—	13	14	13	14	27	29	29	34
C 61 3_29.4	29.4	—	—	—	—	13	14	13	14	27	29	29	34
C 61 3_33.0	33.0	—	—	—	—	11	12	11	12	25	28	27	32
C 61 3_36.1	36.1	—	—	—	—	11	12	11	12	25	28	27	32
C 61 3_43.4	43.4	—	—	—	—	7.9	8.4	7.8	8.8	22	24	24	29
C 61 3_47.6	47.6	—	—	—	—	7.9	8.4	7.8	8.8	22	24	24	29
C 61 3_53.5	53.5	—	—	—	—	6.8	7.3	6.7	7.7	21	23	23	28
C 61 3_58.6	58.6	—	—	—	—	6.7	7.2	6.6	7.6	21	23	23	28
C 61 3_67.7	67.7	—	—	5.6	6.1	5.7	6.2	5.6	6.6	20	22	22	27
C 61 3_74.2	74.2	—	—	5.6	6.1	5.7	6.2	5.6	6.6	20	22	22	27
C 61 3_83.0	83.0	—	—	4.7	5.2	4.8	5.3	4.7	5.7	19	21	21	26
C 61 3_91.0	91.0	—	—	4.7	5.2	4.8	5.3	4.7	5.7	19	21	21	26
C 61 3_103.6	103.6	—	—	4.1	4.6	4.2	4.7	4.1	5.1	18	21	20	25
C 61 3_113.6	113.6	—	—	4.1	4.6	4.2	4.7	4.1	5.1	18	21	20	25
C 61 3_128.1	128.1	—	—	3.8	4.3	3.9	4.4	3.8	4.8	18	20	20	25
C 61 3_140.5	140.5	—	—	3.8	4.3	3.9	4.4	3.8	4.8	18	20	20	25
C 61 3_150.0	150.0	—	—	3.5	4.0	3.6	4.1	3.5	4.5	—	—	—	—
C 61 3_164.5	164.5	—	—	3.5	4.0	3.6	4.1	3.5	4.5	—	—	—	—
C 61 3_178.6	178.6	—	—	3.4	3.9	3.5	4.0	3.4	4.4	—	—	—	—
C 61 3_195.8	195.8	—	—	3.4	3.9	3.5	4.0	3.4	4.4	—	—	—	—
C 61 4_217.4	217.4	3.5	3.9	3.5	3.9	3.6	4.1	3.5	4.5	—	—	—	—
C 61 4_238.3	238.3	3.5	3.9	3.5	3.9	3.6	4.1	3.5	4.5	—	—	—	—
C 61 4_275.3	275.3	3.6	4.1	3.6	4.1	3.7	4.2	3.6	4.6	—	—	—	—
C 61 4_301.7	301.7	3.6	4.1	3.6	4.1	3.7	4.2	3.6	4.6	—	—	—	—
C 61 4_337.7	337.7	3.4	3.8	3.4	3.8	3.5	4.0	3.4	4.4	—	—	—	—
C 61 4_370.1	370.1	3.4	3.8	3.4	3.8	3.5	4.0	3.4	4.4	—	—	—	—
C 61 4_421.5	421.5	3.4	3.8	3.4	3.8	3.4	3.9	3.3	4.3	—	—	—	—
C 61 4_462.0	462.0	3.4	3.8	3.4	3.8	3.4	3.9	3.3	4.3	—	—	—	—
C 61 4_521.1	521.1	3.3	3.8	3.3	3.8	3.4	3.9	3.3	4.3	—	—	—	—
C 61 4_571.2	571.2	3.3	3.8	3.3	3.8	3.4	3.9	3.3	4.3	—	—	—	—
C 61 4_610.1	610.1	3.3	3.7	3.3	3.7	3.4	3.9	3.3	4.3	—	—	—	—
C 61 4_668.8	668.8	3.3	3.7	3.3	3.7	3.4	3.9	3.3	4.3	—	—	—	—
C 61 4_726.3	726.3	3.3	3.7	3.3	3.7	3.4	3.9	3.3	4.3	—	—	—	—
C 61 4_796.1	796.1	3.3	3.7	3.3	3.7	3.4	3.9	3.3	4.3	—	—	—	—

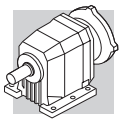

C 70

	i	J (•10-4) [kgm2]													
			IEC												
			63	71	80	90	100 112	132	160	180	200	225	250	280	
C 70 2_4.6	4.6	—	—	—	—	—	—	—	136	133	143	—	—	—	99
C 70 2_5.9	5.9	—	—	—	—	—	—	—	119	117	126	—	—	—	32
C 70 2_6.3	6.3	—	—	—	—	—	—	—	129	127	136	—	—	—	93
C 70 2_7.5	7.5	26	—	—	—	—	—	45	105	102	112	—	—	—	68
C 70 2_8.0	8.0	—	—	—	—	—	—	—	115	113	122	—	—	—	78
C 70 2_9.5	9.5	19	—	—	—	—	—	38	97	95	—	—	—	—	60
C 70 2_10.2	10.2	24	—	—	—	—	—	43	102	100	109	—	—	—	65
C 70 2_11.2	11.2	15	—	—	—	—	—	34	94	91	—	—	—	—	56
C 70 2_13.0	13.0	17	—	—	—	—	—	36	95	93	—	—	—	—	58
C 70 2_14.1	14.1	9.9	—	—	12	12	14	29	88	86	—	—	—	—	51
C 70 2_15.3	15.3	14	—	—	—	—	—	33	93	90	—	—	—	—	55
C 70 2_16.7	16.7	6.9	—	—	9.5	9.4	11	26	85	83	—	—	—	—	48
C 70 2_19.3	19.3	9.1	—	—	12	12	13	28	87	85	—	—	—	—	50
C 70 2_22.9	22.9	6.4	—	—	9.0	8.9	10	25	85	83	—	—	—	—	48
C 70 2_27.7	27.7	5.2	—	—	8.0	7.9	9.2	24	84	81	—	—	—	—	46
C 70 2_34.7	34.7	3.2	—	—	6.1	6.0	7.3	22	82	79	—	—	—	—	44
C 70 3_41.3	41.3	4.4	—	—	7.2	7.2	8.5	23	83	80	—	—	—	—	46
C 70 3_44.7	44.7	4.2	—	—	7.0	7.0	8.2	23	83	80	—	—	—	—	45
C 70 3_52.2	52.2	3.0	—	—	5.8	5.8	7.0	22	81	79	—	—	—	—	44
C 70 3_56.5	56.5	2.8	—	—	5.7	5.6	6.9	22	81	79	—	—	—	—	44
C 70 3_65.9	65.9	2.0	—	—	4.9	4.8	6.1	21	80	78	—	—	—	—	43
C 70 3_71.3	71.3	2.0	—	—	4.8	4.8	6.0	21	80	78	—	—	—	—	43
C 70 3_81.4	81.4	1.5	—	—	4.3	4.3	5.6	20	80	78	—	—	—	—	43
C 70 3_88.2	88.2	1.4	—	—	4.3	4.2	5.5	20	80	76	—	—	—	—	43
C 70 3_103.8	103.8	1.0	—	—	3.8	3.8	5.1	20	79	77	—	—	—	—	42
C 70 3_112.4	112.4	0.90	—	—	3.8	3.7	5.0	20	79	77	—	—	—	—	42
C 70 3_126.8	126.8	0.70	—	—	3.5	3.5	4.8	20	79	77	—	—	—	—	42
C 70 3_137.4	137.4	0.70	—	—	3.5	3.5	4.7	20	79	77	—	—	—	—	42
C 70 3_150.3	150.3	0.50	—	—	3.4	3.4	9.6	—	—	—	—	—	—	—	42
C 70 3_162.8	162.8	0.50	—	—	3.4	3.4	4.6	—	—	—	—	—	—	—	42
C 70 3_179.2	179.2	0.40	—	—	3.2	3.3	4.5	—	—	—	—	—	—	—	42
C 70 3_194.1	194.1	0.40	—	—	3.2	3.2	4.5	—	—	—	—	—	—	—	42
C 70 3_220.9	220.9	0.30	—	—	3.1	3.1	4.3	—	—	—	—	—	—	—	41
C 70 3_239.3	239.3	0.30	—	—	3.1	3.1	4.3	—	—	—	—	—	—	—	41
C 70 4_251.3	251.3	0.70	2.2	2.2	3.5	3.5	4.8	20	—	—	—	—	—	—	11
C 70 4_272.2	272.2	0.70	2.2	2.1	3.5	3.5	4.8	20	—	—	—	—	—	—	11
C 70 4_317.9	317.9	0.50	2.0	2.0	3.4	3.3	4.6	19	—	—	—	—	—	—	11
C 70 4_344.3	344.3	0.50	2.0	2.0	3.4	3.3	4.6	19	—	—	—	—	—	—	11
C 70 4_409.4	409.4	0.40	1.8	1.8	3.2	3.2	4.5	19	—	—	—	—	—	—	7.9
C 70 4_443.5	443.5	0.40	1.8	1.8	3.2	3.2	4.5	19	—	—	—	—	—	—	7.9
C 70 4_512.0	512.0	0.30	1.7	1.7	3.1	3.1	4.4	19	—	—	—	—	—	—	7.8
C 70 4_554.7	554.7	0.30	1.7	1.7	3.1	3.1	4.4	19	—	—	—	—	—	—	7.8
C 70 4_606.8	606.8	0.20	1.7	1.7	3.1	3.0	4.3	—	—	—	—	—	—	—	7.8
C 70 4_657.3	657.3	0.20	1.7	1.7	3.1	3.0	4.3	—	—	—	—	—	—	—	7.7
C 70 4_736.0	736.0	0.20	1.6	1.6	3.0	2.9	4.3	—	—	—	—	—	—	—	7.7
C 70 4_797.3	797.3	0.20	1.6	1.6	3.0	2.9	4.3	—	—	—	—	—	—	—	7.7
C 70 4_922.6	922.6	0.10	1.6	1.6	3.0	2.9	4.2	—	—	—	—	—	—	—	7.7
C 70 4_999.5	999.5	0.10	1.6	1.6	3.0	2.9	4.2	—	—	—	—	—	—	—	7.6
C 70 4_1069	1069	0.80	1.6	1.5	2.9	2.9	4.2	—	—	—	—	—	—	—	7.6
C 70 4_1158	1158	0.80	1.6	1.5	2.9	2.9	4.2	—	—	—	—	—	—	—	7.6
C 70 4_1362	1362	0.60	1.5	1.5	2.9	2.9	4.1	—	—	—	—	—	—	—	7.6
C 70 4_1476	1476	0.60	1.5	1.5	2.9	2.9	4.1	—	—	—	—	—	—	—	7.6

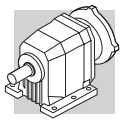

C 80

	i	J (•10-4) [kgm2]													
			IEC												
			63	71	80	90	100 112	132	160	180	200	225	250	280	
C 80 2_5.6	5.6	—	—	—	—	—	—	—	—	197	211	489	—	—	164
C 80 2_6.1	6.1	—	—	—	—	—	—	—	—	193	210	485	—	—	159
C 80 2_7.0	7.0	—	—	—	—	—	—	—	160	161	174	452	—	—	127
C 80 2_7.6	7.6	—	—	—	—	—	—	—	158	158	172	449	—	—	124
C 80 2_8.9	8.9	—	—	—	—	—	—	—	137	135	146	429	—	—	101
C 80 2_9.6	9.6	—	—	—	—	—	—	—	136	133	144	427	—	—	99
C 80 2_11.1	11.1	38	—	—	—	—	—	56	116	113	124	408	—	—	79
C 80 2_12.0	12.0	36	—	—	—	—	—	55	115	112	123	407	—	—	78
C 80 2_13.8	13.8	28	—	—	—	—	—	47	106	104	135	398	—	—	69
C 80 2_14.9	14.9	27	—	—	—	—	—	46	106	103	134	397	—	—	69
C 80 2_16.7	16.7	21	—	—	—	—	—	40	100	97	127	391	—	—	63
C 80 2_18.1	18.1	21	—	—	—	—	—	40	99	97	127	390	—	—	62
C 80 2_20.5	20.5	14	—	—	17	17	18	33	93	90	120	383	—	—	55
C 80 2_22.2	22.2	14	—	—	16	16	18	33	92	90	120	383	—	—	55
C 80 2_24.0	24.0	13	—	—	16	16	17	32	91	89	119	382	—	—	54
C 80 2_25.9	25.9	13	—	—	16	15	17	32	91	89	118	382	—	—	54
C 80 2_31.3	31.3	8.7	—	—	12	11	13	28	87	85	—	—	—	—	50
C 80 2_39.1	39.1	5.2	—	—	8.0	8.0	9.2	24	84	81	—	—	—	—	46
C 80 3_43.5	43.5	9.6	—	—	12	12	14	29	88	86	—	—	—	—	51
C 80 3_47.4	47.4	9.1	—	—	12	12	13	28	87	85	—	—	—	—	50
C 80 3_57.3	57.3	5.7	—	—	8.5	8.5	9.7	25	84	82	—	—	—	—	47
C 80 3_62.5	62.5	5.4	—	—	8.2	8.2	9.5	24	84	82	—	—	—	—	47
C 80 3_70.5	70.5	4.3	—	—	7.1	7.0	8.3	23	83	80	—	—	—	—	45
C 80 3_76.9	76.9	4.1	—	—	7.0	6.9	8.2	23	82	80	—	—	—	—	45
C 80 3_89.3	89.3	3.0	—	—	5.9	5.8	7.1	22	81	79	—	—	—	—	44
C 80 3_97.4	97.4	2.9	—	—	5.8	5.7	7.0	22	81	79	—	—	—	—	44
C 80 3_109.5	109.5	2.0	—	—	4.8	4.8	6.1	21	80	78	—	—	—	—	43
C 80 3_119.5	119.5	1.9	—	—	4.8	4.7	6.0	21	80	79	—	—	—	—	43
C 80 3_136.7	136.7	1.4	—	—	4.3	4.2	5.5	20	80	78	—	—	—	—	43
C 80 3_149.1	149.1	1.4	—	—	4.2	4.2	5.5	20	80	77	—	—	—	—	43
C 80 3_169.0	169.0	1.0	—	—	3.9	3.8	5.1	20	80	77	—	—	—	—	42
C 80 3_184.4	184.4	1.0	—	—	3.9	3.8	5.1	20	80	77	—	—	—	—	42
C 80 3_197.9	197.9	0.80	—	—	3.7	3.6	4.9	—	—	—	—	—	—	—	42
C 80 3_215.8	215.8	0.80	—	—	3.6	3.6	4.9	—	—	—	—	—	—	—	42
C 80 4_261.9	261.9	1.7	—	—	4.6	4.5	5.8	21	—	—	—	—	—	—	12
C 80 4_285.7	285.7	1.7	—	—	4.6	4.5	5.8	21	—	—	—	—	—	—	12
C 80 4_334.3	334.3	1.2	2.7	2.7	4.0	4.0	5.3	20	—	—	—	—	—	—	11
C 80 4_364.7	364.7	1.2	2.7	2.6	4.0	4.0	5.3	20	—	—	—	—	—	—	11
C 80 4_417.5	417.5	0.90	2.4	2.3	3.7	3.7	5.0	20	—	—	—	—	—	—	11
C 80 4_455.4	455.4	0.90	2.3	2.3	3.7	3.7	5.5	20	—	—	—	—	—	—	11
C 80 4_529.3	529.3	0.50	2.0	2.0	3.4	3.3	4.6	19	—	—	—	—	—	—	11
C 80 4_577.4	577.4	0.50	2.0	2.0	3.4	3.3	4.6	19	—	—	—	—	—	—	11
C 80 4_664.3	664.3	0.40	2.0	1.9	3.3	3.2	4.5	19	—	—	—	—	—	—	11
C 80 4_724.7	724.7	0.40	2.0	1.9	3.3	3.2	4.5	19	—	—	—	—	—	—	11
C 80 4_783.4	783.4	0.30	2.0	1.8	3.2	3.1	4.4	—	—	—	—	—	—	—	9.4
C 80 4_854.6	854.6	0.30	2.0	1.8	3.2	3.1	4.4	—	—	—	—	—	—	—	9.4
C 80 4_945.7	945.7	0.20	1.7	1.7	3.1	3.0	4.3	—	—	—	—	—	—	—	9.3
C 80 4_1032	1032	0.20	1.7	1.7	3.1	3.0	4.3	—	—	—	—	—	—	—	9.3
C 80 4_1168	1168	0.20	1.6	1.6	3.0	3.0	4.2	—	—	—	—	—	—	—	9.2
C 80 4_1274	1274	0.20	1.6	1.6	3.0	3.0	4.2	—	—	—	—	—	—	—	9.2
C 80 4_1358	1358	0.10	1.6	1.6	3.0	2.9	4.2	—	—	—	—	—	—	—	9.2
C 80 4_1481	1481	0.10	1.6	1.6	3.0	2.9	4.2	—	—	—	—	—	—	—	9.2

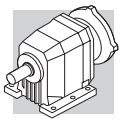

C 90

	i	J (•10-4) [kgm2]													
			IEC												
			63	71	80	90	100 112	132	160	180	200	225	250	280	
C 90 2_5.2	5.2	—	—	—	—	—	—	—	—	—	332	610	637	—	619
C 90 2_5.6	5.6	—	—	—	—	—	—	—	—	—	321	599	626	—	609
C 90 2_6.8	6.8	—	—	—	—	—	—	—	—	—	252	530	557	—	540
C 90 2_7.3	7.3	—	—	—	—	—	—	—	—	—	246	524	551	—	533
C 90 2_8.3	8.3	—	—	—	—	—	—	—	—	—	212	490	517	—	499
C 90 2_9.0	9.0	—	—	—	—	—	—	—	—	—	208	485	513	—	495
C 90 2_10.4	10.4	—	—	—	—	—	—	—	167	164	175	458	484	—	461
C 90 2_11.2	11.2	—	—	—	—	—	—	—	164	162	173	455	482	—	458
C 90 2_12.8	12.8	65	—	—	—	—	—	84	143	141	152	436	462	—	439
C 90 2_13.9	13.9	63	—	—	—	—	—	82	141	139	200	434	460	—	437
C 90 2_16.0	16.0	47	—	—	—	—	—	66	125	123	154	417	443	—	420
C 90 2_17.3	17.3	46	—	—	—	—	—	65	124	122	153	416	442	—	419
C 90 2_18.7	18.7	42	—	—	—	—	—	61	121	119	148	412	433	—	415
C 90 2_20.2	20.2	41	—	—	—	—	—	61	199	118	147	411	438	—	414
C 90 2_22.9	22.9	28	—	—	30	30	31	47	106	104	133	397	423	—	400
C 90 2_24.8	24.8	27	—	—	29	29	31	46	105	103	133	396	422	—	399
C 90 2_27.2	27.2	22	—	—	25	25	26	41	101	99	128	391	418	—	394
C 90 2_29.4	29.4	22	—	—	25	24	26	41	100	98	127	391	417	—	394
C 90 2_35.1	35.1	14	—	—	17	17	18	33	93	90	—	—	—	—	386
C 90 3_39.4	39.4	27	—	—	—	—	—	46	105	103	112	398	424	—	412
C 90 3_43.0	43.0	26	—	—	—	—	—	45	104	102	111	396	422	—	410
C 90 3_50.3	50.3	19	—	—	—	—	—	38	98	95	126	389	415	—	403
C 90 3_54.9	54.9	19	—	—	—	—	—	37	97	95	125	389	415	—	401
C 90 3_59.2	59.2	16	—	—	—	—	—	35	94	92	122	385	411	—	398
C 90 3_64.6	64.6	15	—	—	—	—	—	34	94	91	121	384	410	—	398
C 90 3_74.4	74.4	10	—	—	13	13	14	29	88	86	116	379	405	—	393
C 90 3_81.2	81.2	9.8	—	—	12	12	13	29	88	86	115	379	405	—	392
C 90 3_88.2	88.2	7.1	—	—	9.7	9.6	11	26	85	83	113	376	402	—	389
C 90 3_96.2	96.2	6.9	—	—	9.4	9.4	11	26	85	83	112	376	402	—	389
C 90 3_107.0	107.0	5.7	—	—	8.4	8.4	9.6	25	84	82	—	—	—	—	388
C 90 3_116.7	116.7	5.5	—	—	8.3	8.2	9.5	24	84	82	—	—	—	—	388
C 90 3_134.1	134.1	3.5	—	—	6.4	6.3	7.6	22	82	80	—	—	—	—	386
C 90 3_146.3	146.3	3.4	—	—	6.3	6.2	7.5	22	82	80	—	—	—	—	386
C 90 3_157.8	157.8	2.5	—	—	5.4	5.3	6.6	21	81	79	—	—	—	—	385
C 90 3_172.1	172.1	2.4	—	—	5.3	5.2	6.5	21	81	79	—	—	—	—	385
C 90 4_212.4	212.4	4.2	—	—	7.0	7.0	8.3	23	83	80	—	—	—	—	14
C 90 4_231.7	231.7	4.1	—	—	7.0	6.9	8.2	23	82	80	—	—	—	—	14
C 90 4_268.5	268.5	2.8	—	—	5.7	5.6	6.9	22	81	79	—	—	—	—	13
C 90 4_292.9	292.9	2.8	—	—	5.7	2.6	6.9	22	81	79	—	—	—	—	13
C 90 4_339.0	339.0	2.0	3.4	3.4	4.8	4.8	6.0	21	80	78	—	—	—	—	12
C 90 4_369.8	369.8	2.0	3.4	3.4	4.8	4.8	6.0	21	80	78	—	—	—	—	12
C 90 4_419.0	419.0	1.4	2.9	2.9	4.3	4.2	5.5	20	80	78	—	—	—	—	12
C 90 4_457.1	457.1	1.4	2.9	2.9	4.3	4.2	5.5	20	80	78	—	—	—	—	12
C 90 4_534.2	534.2	0.90	2.4	2.4	3.8	3.7	5.0	20	79	77	—	—	—	—	11
C 90 4_582.8	582.8	0.90	2.4	2.4	3.8	3.7	5.0	20	79	77	—	—	—	—	11
C 90 4_652.8	652.8	0.70	2.1	2.1	3.5	3.5	4.7	20	79	77	—	—	—	—	11
C 90 4_712.2	712.2	0.70	2.1	2.1	3.5	3.5	4.7	20	79	77	—	—	—	—	11
C 90 4_773.6	773.6	0.50	2.0	2.0	3.4	3.3	4.6	—	—	—	—	—	—	—	9.7
C 90 4_844.0	844.0	0.50	2.0	2.0	3.4	3.3	4.6	—	—	—	—	—	—	—	9.6
C 90 4_922.3	922.3	0.40	1.8	1.8	3.2	3.2	4.5	—	—	—	—	—	—	—	9.5
C 90 4_1006	1006	0.40	1.8	1.8	3.2	3.2	4.5	—	—	—	—	—	—	—	9.4
C 90 4_1137	1137	0.30	1.7	1.7	3.1	3.0	4.3	—	—	—	—	—	—	—	9.3
C 90 4_1240	1240	0.30	1.7	1.7	3.1	3.0	4.3	—	—	—	—	—	—	—	9.3

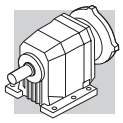

C 100

	i	J (•10-4) [kgm2]													
			IEC												
			63	71	80	90	100 112	132	160	180	200	225	250	280	
C 100 2_4.9	4.9	—	—	—	—	—	—	—	—	—	674	960	987	970	972
C 100 2_5.3	5.3	—	—	—	—	—	—	—	—	—	647	933	960	943	944
C 100 2_6.5	6.5	—	—	—	—	—	—	—	—	—	481	767	794	777	778
C 100 2_7.1	7.1	—	—	—	—	—	—	—	—	—	465	751	778	761	763
C 100 2_8.4	8.4	—	—	—	—	—	—	—	—	—	365	651	678	660	662
C 100 2_9.0	9.0	—	—	—	—	—	—	—	—	—	355	641	668	651	653
C 100 2_10.1	10.1	—	—	—	—	—	—	—	—	—	291	577	604	587	589
C 100 2_10.9	10.9	—	—	—	—	—	—	—	—	—	285	570	597	580	582
C 100 2_12.5	12.5	—	—	—	—	—	—	—	224	222	233	521	550	539	529
C 100 2_13.5	13.5	—	—	—	—	—	—	—	220	218	228	517	545	532	524
C 100 2_15.2	15.2	122	—	—	—	—	—	82	141	200	199	472	499	528	514
C 100 2_16.5	16.5	119	—	—	—	—	—	138	197	195	206	496	525	511	504
C 100 2_18.7	18.7	97	—	—	—	—	—	116	175	173	203	474	501	488	480
C 100 2_20.2	20.2	95	—	—	—	—	—	114	173	171	201	471	499	486	478
C 100 2_22.2	22.2	73	—	—	—	—	—	92	102	150	179	448	477	463	456
C 100 2_24.1	24.1	72	—	—	—	—	—	91	150	148	178	447	476	462	455
C 100 2_29.6	29.6	50	—	—	—	—	54	69	129	127	156	425	454	440	433
C 100 3_34.3	34.3	—	—	—	—	—	—	—	148	146	155	439	465	471	461
C 100 3_36.9	36.9	—	—	—	—	—	—	—	145	143	152	436	462	468	458
C 100 3_42.9	42.9	44	—	—	—	—	—	63	123	120	130	415	441	451	437
C 100 3_46.2	46.2	43	—	—	—	—	—	61	121	118	128	413	439	452	435
C 100 3_53.3	53.3	33	—	—	—	—	—	51	111	109	139	403	429	432	424
C 100 3_57.4	57.4	31	—	—	—	—	—	50	110	107	138	401	427	431	423
C 1003_64.5	64.5	24	—	—	—	—	—	43	103	101	130	394	420	422	415
C 100 3_69.4	69.4	24	—	—	—	—	—	43	102	100	129	393	419	421	414
C 100 3_79.4	79.4	16	—	—	—	—	20	35	95	92	122	385	411	413	407
C 100 3_85.6	85.6	16	—	—	—	—	19	35	94	92	121	385	411	413	406
C 100 3_92.7	92.7	15	—	—	—	—	18	34	93	91	120	384	410	412	405
C 100 3_99.8	99.8	14	—	—	—	—	18	33	93	90	119	383	409	411	404
C 100 3_111.9	111.9	9.9	—	—	—	—	14	29	88	86	—	—	—	—	392
C 100 3_120.5	120.5	9.6	—	—	—	—	14	29	88	86	—	—	—	—	392
C 100 3_139.7	139.7	6.0	—	—	—	—	10	25	84	82	—	—	—	—	388
C 100 3_150.4	150.4	5.8	—	—	—	—	9.8	25	84	82	—	—	—	—	388
C 100 4_162.1	162.1	13	—	—	16	16	17	32	100	89	—	—	—	—	23
C 100 4_185.4	185.4	9.6	—	—	13	12	14	29	88	86	—	—	—	—	20
C 100 4_199.6	199.6	8.5	—	—	12	12	14	28	88	86	—	—	—	—	20
C 100 4_244.2	244.2	5.7	—	—	8.5	8.5	9.8	25	84	82	—	—	—	—	16
C 100 4_263.0	263.0	5.6	—	—	8.5	8.4	9.7	25	84	82	—	—	—	—	16
C 100 4_300.5	300.5	4.2	—	—	7.1	7.1	8.4	23	83	80	—	—	—	—	15
C 100 4_323.6	323.6	4.2	—	—	7.1	7.0	8.3	23	83	80	—	—	—	—	14
C 100 4_380.5	380.5	3.1	4.5	4.5	5.9	5.5	7.1	22	81	79	—	—	—	—	13
C 100 4_409.8	409.8	3.0	4.5	4.5	5.9	5.5	7.1	22	81	79	—	—	—	—	13
C 100 4_466.7	466.7	2.0	3.5	3.5	4.9	4.8	6.1	20	80	78	—	—	—	—	12
C 100 4_502.6	502.6	2.0	3.5	3.4	4.8	4.8	6.1	20	80	78	—	—	—	—	12
C 100 4_582.6	582.6	1.4	2.9	2.9	4.3	4.2	5.5	20	80	77	—	—	—	—	12
C 100 4_627.4	627.4	1.4	2.9	2.9	4.3	4.2	5.5	20	80	77	—	—	—	—	12
C 100 4_720.3	720.3	1.0	2.5	2.5	3.9	3.4	5.1	20	79	77	—	—	—	—	11
C 100 4_775.7	775.7	1.0	2.5	2.5	3.9	3.4	5.1	20	79	77	—	—	—	—	11
C 100 4_843.3	843.3	0.80	2.3	2.3	3.7	3.6	4.9	—	—	—	—	—	—	—	9.9
C 100 4_908.2	908.2	0.80	2.3	2.3	3.7	3.6	4.9	—	—	—	—	—	—	—	9.9
C 100 4_1004	1004	0.60	2.1	2.0	3.4	3.4	4.7	—	—	—	—	—	—	—	9.7
C 100 4_1081	1081	0.60	2.1	2.0	3.4	3.4	4.7	—	—	—	—	—	—	—	9.7

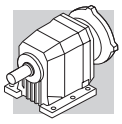

29 精确速比

i_N	C12	C22	C32	C36	C41	C51	C61	C70	C80	C90	C100
2.5						2.62895					
2.8	2.76731	2.72212	2.87879	2.68687	2.65909		2.82011				
3.2	3.20743	3.32609		3.18182		3.30758					
3.5	3.65132	3.70709	3.40909	3.48617	3.61111		3.69925				
4.0			3.73518	4.20000							
4.5	4.31203	4.25831	4.50000	4.62201	4.66304	4.45370	4.55556	4.57143			
5.0	4.86842	4.76902	4.95215	5.27807						5.17231	4.92308
5.6	5.59868	5.59006	5.65508	5.84659	5.95263	5.63043		5.85034	5.64103	5.60333	5.33333
6.3	6.23158	6.08696	6.26420		6.36364		6.00176 6.74074	6.25455	6.11111	6.75824	6.52308
7.1		7.08300	7.16498	6.78114	7.06612	6.98684	7.48485	7.46032	7.04000	7.32143	7.06667
8.0	7.62201		8.48485	8.03030		7.75120		8.00433	7.62667	8.32615	8.35165
9.0	8.83422	8.65455	9.29644	8.79842	8.64198	8.79040	8.84211	9.52381	8.86447	9.02000	9.04762
10.0	10.05682	9.64593		10.60000	9.59596	9.75207	9.81818	10.20707	9.60317	10.36264	10.09231
11.2		11.08021	11.20000	11.66507	11.15942	11.83642	10.88889	11.20879	11.09402	11.22619	10.93333
12.5	11.87662	12.40909	12.32536	13.32086	12.39130	13.13131	12.09091	13.03030	12.01852	12.79060	12.45421
14.0	13.40909	14.54545	14.07487	14.75568	14.24561	14.96377	14.34568	14.09524	13.76410 14.91111	13.85648	13.49206
16.0	15.42045	15.83838	15.59091		15.81818	16.60079	15.92929	15.33566 16.70330	16.66272	15.97949	15.21368 16.48148
18.0	17.16364 18.38961	18.13636	18.18182	17.20779	17.79167	18.89035	17.65217		18.05128	17.31111 18.68047	18.66667
20.0	20.62937	20.02424	20.08081	19.00505	19.75568	20.95694 21.81606	19.60079	19.28485	20.53333	20.23718	20.22222
22.4	23.24242	21.45455	22.90909	22.13187	22.55556	23.35417 23.89242	22.35088	22.85315	22.24444	22.91795	22.24852
25.0	25.35537	24.27972	25.11515	26.20879	25.04545	25.90909	24.81818 26.77895		23.95266 25.94872	24.82778	24.10256
28.0	29.50000	27.15152 29.61983	26.90909	28.71572	28.31111 28.49003	27.44759 29.77315	27.41667 29.35385	27.71901		27.17160 29.43590	29.55556
31.5	32.77778	33.09091	29.76224 33.09091		31.22945 31.43636	30.05994 33.03030	30.44318 32.97778		31.33333		
35.5	37.00909	36.76768	36.09917	34.59560	33.38462 36.78930	36.38333 36.95862	34.22222 36.14872	34.74747		35.09848	34.29705 36.93529
40.0	42.31313		40.72727	38.07172	37.06993 40.32673	40.36364 40.47619	38.00000	41.26263	39.11111	39.40239	42.92328
45.0		43.27273	45.25253	43.47576	44.75207 46.96356	43.11538 46.72360	43.44691	44.70118	43.49074	42.98443	46.22507
50.0	47.60227	48.64646	52.43636	48.15865	51.47929	47.83217 51.40152	47.62450	52.16479	47.44444	50.30093	53.25397
56.0	55.16883	54.72727	59.39394	56.16170	58.65385	57.02479 58.98416	53.46087 58.60134	56.51186	57.29733	54.87374 59.20032	57.35043
63.0	66.15152	60.00000 63.27273	66.81818	62.02747	64.29364	64.59803		65.85315	62.50617	64.58217	64.46886
71.0		65.33333 74.81250	74.74747	70.76374	74.35897	72.92219	67.69123 74.20000	71.34091	70.50362	74.44537	69.42801
80.0		82.60000	82.55443	77.57802 83.11931	81.50888	79.86264	83.03333	81.41434	76.91304	81.21313	79.44444
90.0		88.50000	94.18182	91.93238	93.33333	92.96514	91.01731	88.19886	89.27047	88.22009	85.55556 92.67399
100.0		100.15385	103.25118	102.21429	102.30769	101.81319	103.64444	103.79138	97.38596	96.24009	99.80276

2x 3x

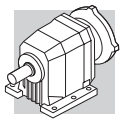

i_N	C12	C22	C32	C36	C41	C51	C61	C70	C80	C90	C100
112.2		112.00000	110.62626	111.50649	110.05917	113.60510	113.61026	112.44066	109.50347	107.00379 116.73140	111.90476
125.5		122.18182	122.35587	125.80220	120.64178	124.41758	128.14222	126.83497	119.45833		120.51282
140.0		136.50000	136.04040 148.40771	139.78022	132.86713 145.64282	134.62559 147.43872	140.46359	137.40455	136.68519 149.11111	134.13580 146.32997	139.68254
160.0		151.66667	167.43434	161.97033	164.10256	160.49861	150.03077 164.45680	150.30339 162.82867	168.99259	157.76199	150.42735 162.10526
180.0		178.50000	186.03816	183.46154	179.88166	175.77423	178.59394	179.18945	184.35556	172.10399	185.37037
200.0		200.66667		206.39423	190.76923 209.11243	197.87075	195.76643	194.12190	197.85897	212.38169	199.62963
225.0		225.75000	215.57172	230.88697		216.70330	217.40754	220.91375	215.84615	231.68911	
250.0		261.00000	244.17508	255.00183	239.94755	240.85197 263.77530	238.31211	239.32323 251.28438	261.85613	268.49591	244.21811 263.00412
280.0			274.69697	290.91758	263.01943		275.27766	272.22475	285.66123	292.90463	300.50725
315.0				318.93187	304.19580 333.44540	297.76563 326.10577	301.74667	317.86109	334.27376	338.95085	323.62319
355.0				341.71272			337.66889 370.13705	344.34951	364.66228	369.76457	380.49708
400.0				377.94421 420.21429	381.81818 418.53147	379.60764 415.73718	421.48741	409.39931	417.48199	419.04541	409.76608
450.0				458.41558	450.24207	463.88750	462.01504	443.51592	455.43490	457.14044	466.73611
500.0				517.18681	493.53457	508.03846	521.11170	512.03745	529.26678		502.63889
560.0				574.65201	543.54736	549.72115	571.21860	554.70724	577.38194	534.22163 582.78723	582.59259
630.0				665.87802	595.81153	602.04142 655.36932	610.12513 668.79101	606.78035 657.34538	664.32106	652.82863	627.40741
710.0				754.23077	671.32867 735.87951	717.74476	726.28202	735.97521	724.71389	712.17669	720.29630
800.0				848.50962	780.41958	807.97222	796.11683	797.30647	783.37099	773.62229 843.95159	775.70370 843.33333
900.0					855.45992	884.87179		922.59000	854.58654 945.71181	922.30089	908.20513
1000.0								999.47250 1069.05117	1031.68561	1006.14643	1003.88889
1125.0								1158.13876	1168.03704	1137.05888	1081.11111
1250.0									1274.22222	1240.42787	
1400.0								1362.26180 1475.78362	1357.84306 1481.28333		

3x 4x

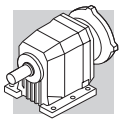

C 05...M

P

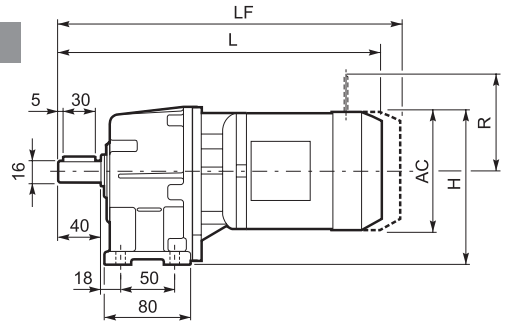

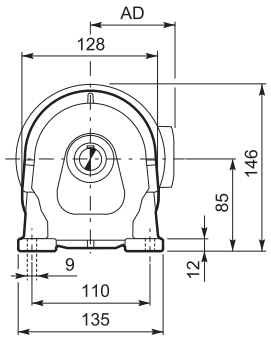

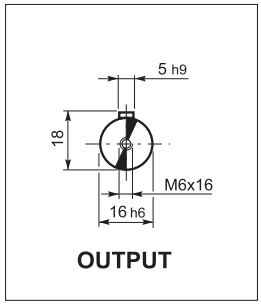

F

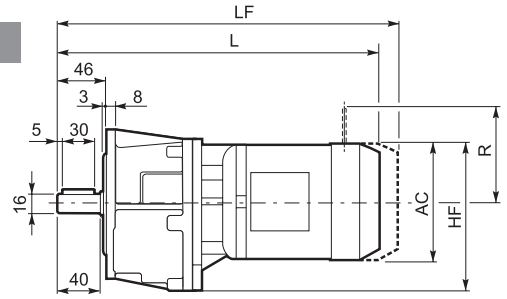

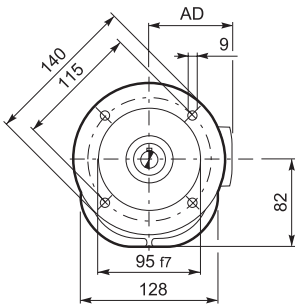

									M...FD M...FA		M...FD		M...FA	
			AC	H	HF	L	AD	Kg	LF	Kg	R	AD	R	AD
C 05 2	**S0**	**M0**	110	140	137	287	91	7	—	—	—	—	—	—
C 05 2	**S05**	**M05**	121	145.5	142.5	332	95	8	398	10	96	122	116	95
C 05 2	**S1**	**M1**	138	154	151	360.5	108	11	423	13	103	135	124	108

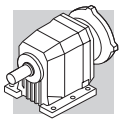

C 12...M/ME/MX

P

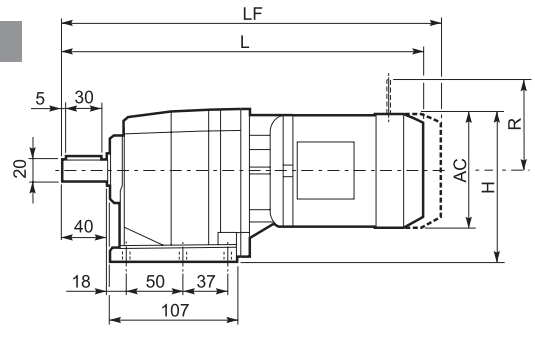

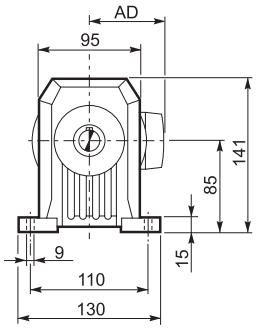

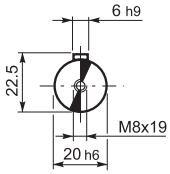

OUTPUT

F

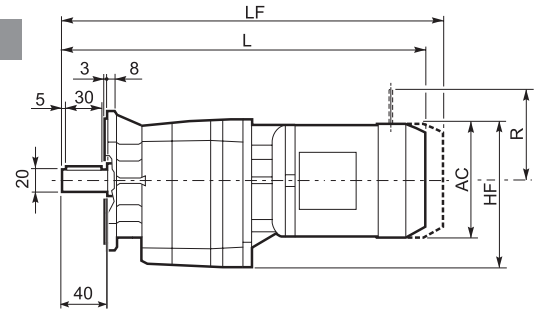

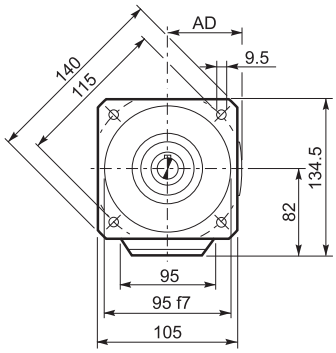

U

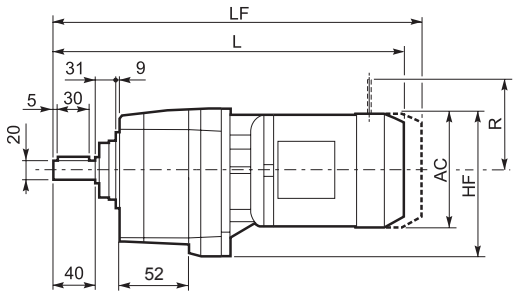

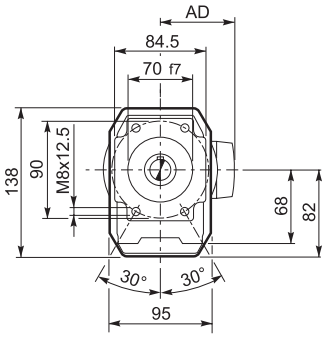

UF

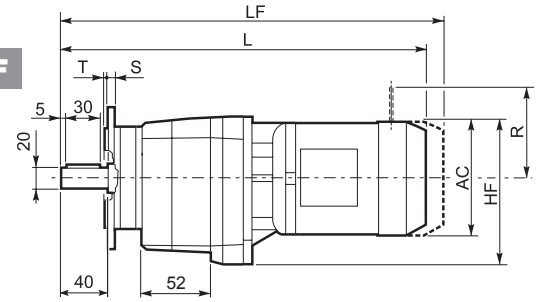

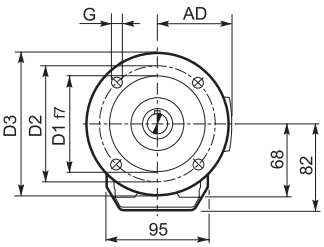

C 12 2_U						
	D1	D2	D3	G	T	S
FA	80	100	120	7	3	8
FB	95	115	140	9	3	10
FC	110	130	160	9	3	10

									M...FD M...FA		M...FD		M...FA	
			AC	H	HF	L	AD	Kg	LF	Kg	R	AD	R	AD
C 12 2	S05	M05	121	145.5	142.5	370.5	95	9	436.5	10	96	122	116	95
C 12 2	S1	M1	138	154	151	404.5	108	11	460.5	13	103	135	124	108
C 12 2	S2	M2S	156	163	160	428.5	119	15	498.5	18	129	146	134	119
C 12 2	S2	ME2S	156	163	160	428.5	119	15	—	—	—	—	—	—
C 12 2	S2	MX2S	156	163	160	472.5	119	20.1	—	—	—	—	—	—
C 12 2	S3	ME3S	195	182.5	179.5	471.5	142	21.5	—	—	—	—	—	—
C 12 2	S3	MX3S	195	182.5	179.5	503.5	142	24.5	—	—	—	—	—	—
C 12 2	S3	ME3L	195	182.5	179.5	503.5	142	22	—	—	—	—	—	—
C 12 2	S3	MX3L	195	182.5	179.5	547.5	142	28	—	—	—	—	—	—

C 12...P (IEC)

P

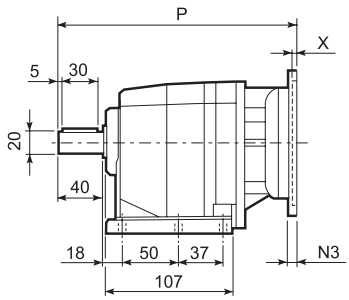

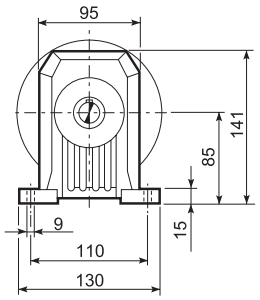

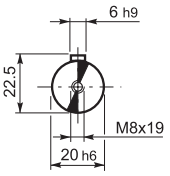

OUTPUT

F

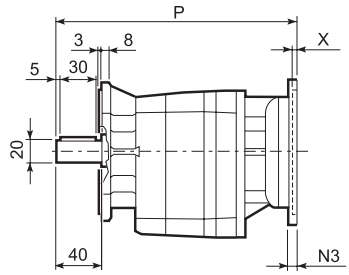

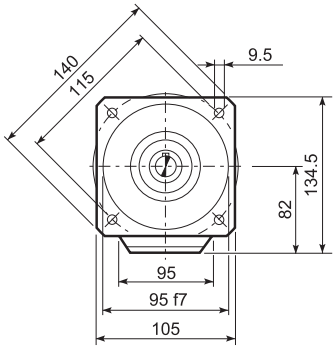

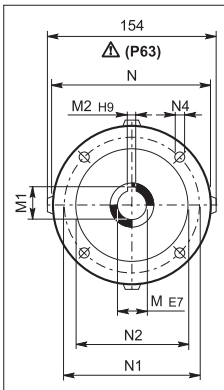

INPUT

U

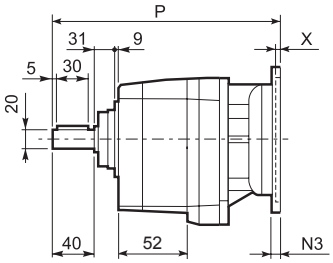

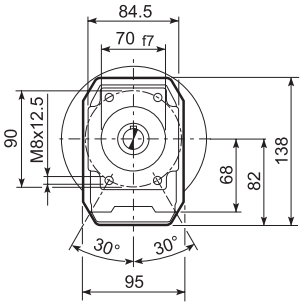

UF

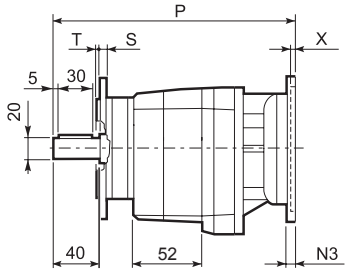

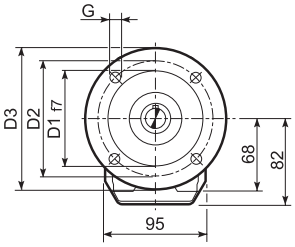

C 12 2_U						
	D1	D2	D3	G	T	S
FA	80	100	120	7	3	8
FB	95	115	140	9	3	10
FC	110	130	160	9	3	10

		M	M1	M2	N	N1	N2	N3	N4	X	P	Kg
C 12 2	P63	11	12.8	4	140	115	95	—	M8x19	4	244.5	6
C 12 2	P71	14	16.3	5	160	130	110	—	M8x16	4.5	244.5	6
C 12 2	P80	19	21.8	6	200	165	130	—	M10x14.5	4	264	7
C 12 2	P90	24	27.3	8	200	165	130	—	M10x14.5	4	264	7
C 12 2	P100	28	31.3	8	250	215	180	—	M12x16	4.5	274	11
C 12 2	P112	28	31.3	8	250	215	180	—	M12x16	4.5	274	11

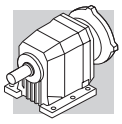

C 12...SK / SC

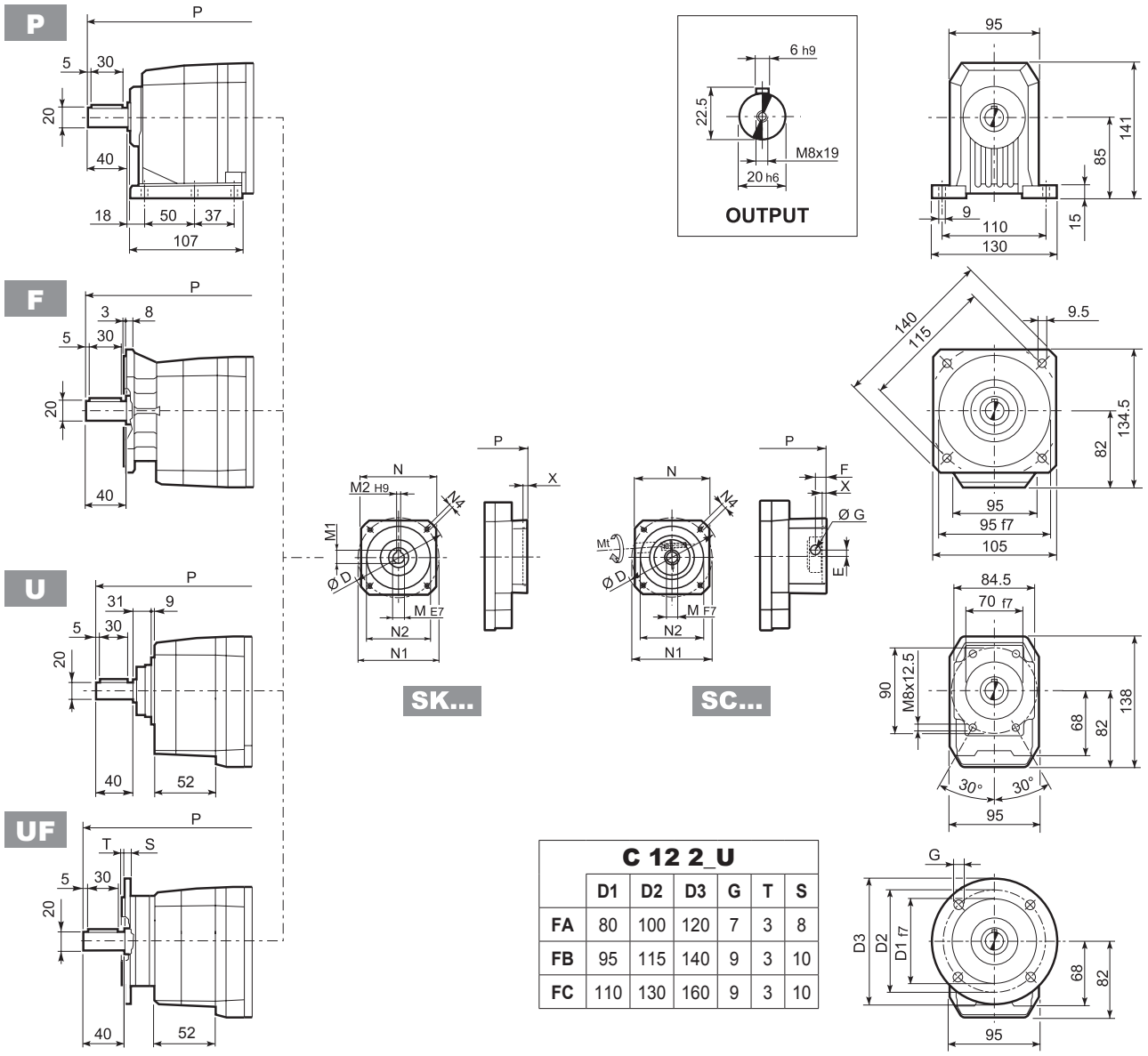

C 12 2_U	D1	D2	D3	G	T	S
FA	80	100	120	7	3	8
FB	95	115	140	9	3	10
FC	110	130	160	9	3	10

		D	M	M1	M2	N	N1	N2	N4	X	P	Kg
C 12 2	SK60A	102	11	12.8	4	82	75	60	M5x10	3.5	216	6
C 12 2	SK60B	102	14	16.3	5	82	75	60	M5x10	4	223	5
C 12 2	SK80A	115	14	16.3	5	90	100	80	M6x12	4	223	5
C 12 2	SK80C	120	19	21.8	6	96	100	80	M6x12	4	264	7
C 12 2	SK95A	130	14	16.3	5	102	115	95	M8x12	4	264	6
C 12 2	SK95B	130	19	21.8	6	102	115	95	M8x12	4	264	7
C 12 2	SK95C	130	24	27.3	8	102	115	95	M8x12	4	264	7
C 12 2	SK110A	150	19	21.8	6	120	130	110	M8x12	5	264	7
C 12 2	SK110B	150	24	27.3	8	120	130	110	M8x12	5	264	7

			Mt [Nm]	D	E	F	G	M	N	N1	N2	N4	X	P	Kg
C 12 2	SC60A	M6	15	102	7	12.5	12.5	11	82	75	60	M5x10	4	243	7
C 12 2	SC60B	M6	15	102	7	12.5	12.5	14	82	75	60	M5x10	4	243	6
C 12 2	SC80A	M6	15	115	6	12.5	12.5	14	90	100	80	M6x12	4	243	6
C 12 2	SC80C	M6	15	120	15.5	14.5	17.75	19	96	100	80	M6x12	4	287.5	8
C 12 2	SC95A	M6	15	130	16.5	15	17.75	14	102	115	95	M8x16	4	287.5	7
C 12 2	SC95B	M6	15	130	16.5	15	17.75	19	102	115	95	M8x16	4	287.5	8
C 12 2	SC95C	M6	15	130	16.5	15	17.75	24	102	115	95	M8x16	4	287.5	8
C 12 2	SC110A	M6	15	150	16.5	16	17.75	19	120	130	110	M8x16	5	287.5	10
C 12 2	SC110B	M6	15	150	16.5	16	17.75	24	120	130	110	M8x16	5	287.5	10

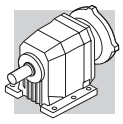

C 12...HS

P

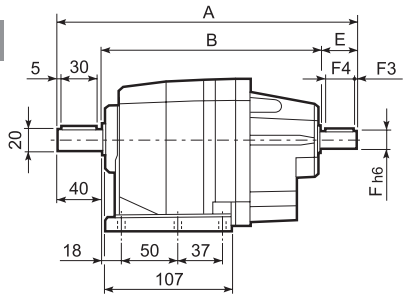

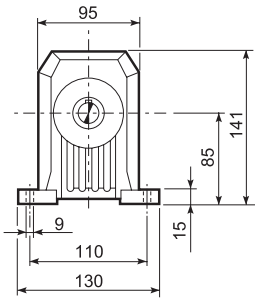

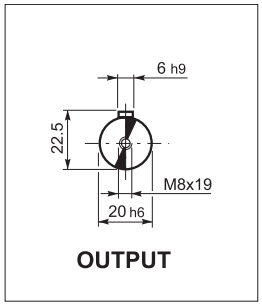

F

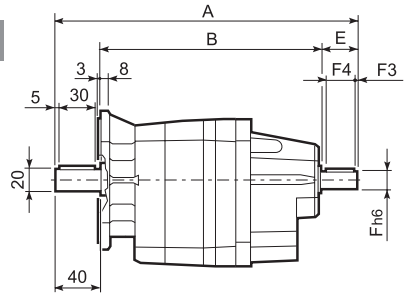

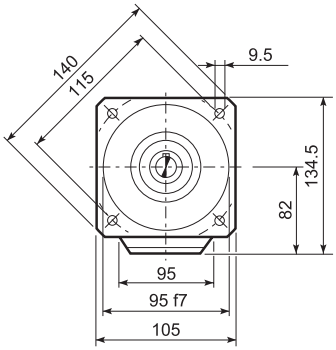

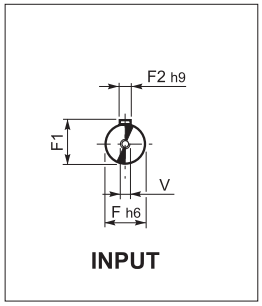

U

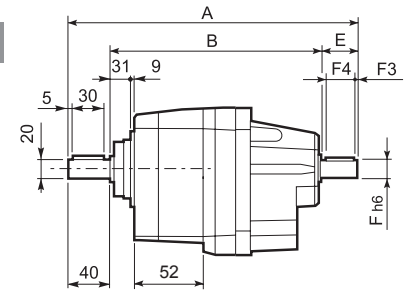

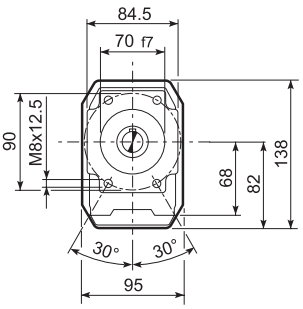

UF

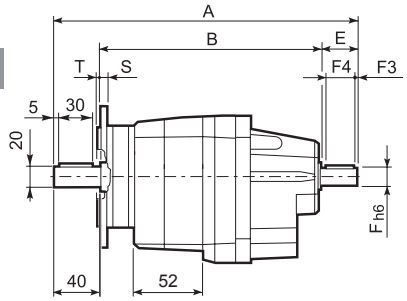

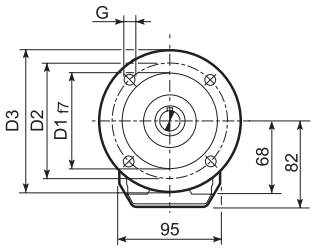

C 12 2_U						
	D1	D2	D3	G	T	S
FA	80	100	120	7	3	8
FB	95	115	140	9	3	10
FC	110	130	160	9	3	10

		A	B	E	F	F1	F2	F3	F4	V	Kg
C 12 2	HS	251.5	171.5	40	16	18	5	2.5	35	M6x16	7.8

C 22...M/ME/MX

P

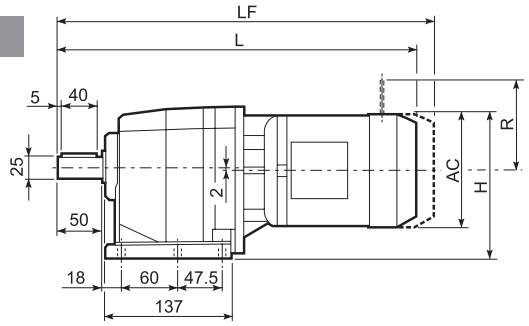

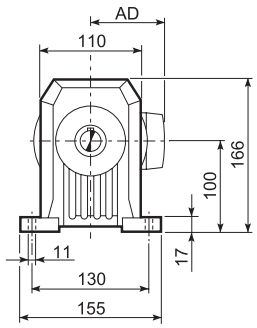

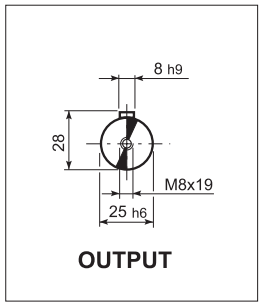

F

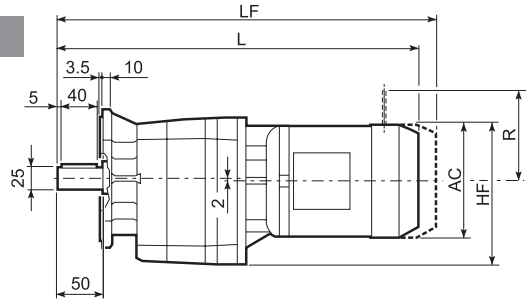

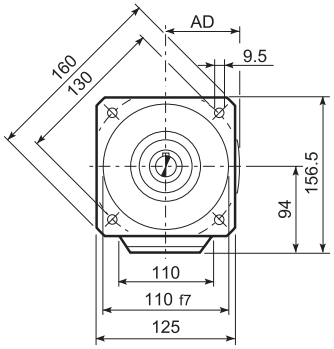

U

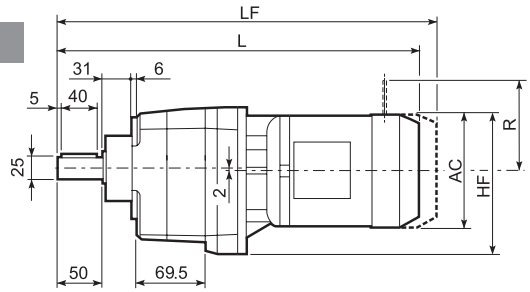

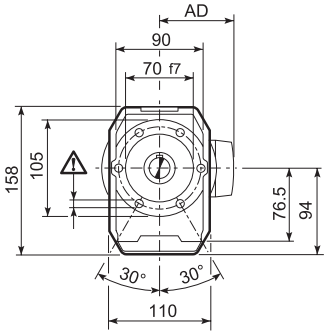

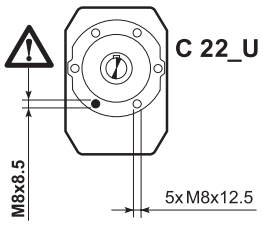

UF

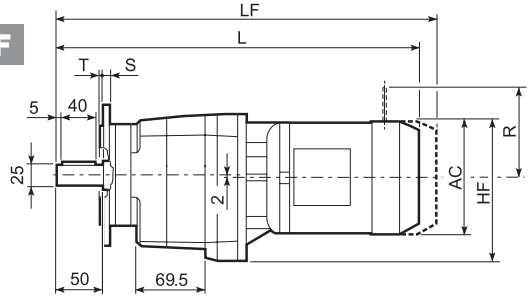

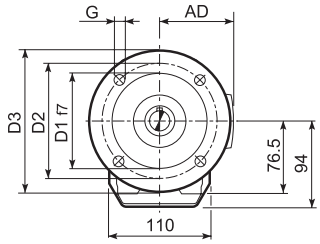

C 22_U						
	D1	D2	D3	G	T	S
FA	95	115	140	9	3	10
FB	110	130	160	9	3	10
FC	130	165	200	11	3.5	11

								M...FD M...FA		M...FD		M...FA	
			AC	H	HF	L	AD	Kg	LF	Kg	R	AD	R	AD
C 22 2	S05	M05	121	160.5	154.5	399	95	8	465	10	96	119	116	95
C 22 2	S1	M1	138	169	163	428	108	11	489	14	103	135	124	108
C 22 2	S2	M2S	156	178	170	456	119	16	527	19	129	146	134	119
C 22 2	S2	ME2S	156	178	170	456	119	16	—	—	—	—	—	—
C 22 2	S2	MX2S	156	178	170	500	119	21.1	—	—	—	—	—	—
C 22 2	S3	ME3S	195	197.5	191.5	500	142	22.5	—	—	—	—	—	—
C 22 2	S3	MX3S	195	197.5	191.5	532	142	25.5	—	—	—	—	—	—
C 22 2	S3	ME3L	195	197.5	191.5	532	142	27	—	—	—	—	—	—
C 22 2	S3	MX3L	195	197.5	191.5	576	142	33	—	—	—	—	—	—
C 22 3	S05	M05	121	160.5	154.5	454.5	95	11	520.5	12	96	122	116	95
C 22 3	S1	M1	138	169	163	483.5	108	13	544.5	15	103	135	124	108
C 22 3	S2	ME2S	156	178	170	511.5	119	18	—	—	—	—	—	—
C 22 3	S2	MX2S	156	178	170	555.5	119	23.1	—	—	—	—	—	—
C 22 3	S3	ME3S	195	197.5	191.5	555.5	142	24.5	—	—	—	—	—	—
C 22 3	S3	MX3S	195	197.5	191.5	587.5	142	27.5	—	—	—	—	—	—
C 22 3	S3	ME3L	195	197.5	191.5	587.5	142	29	—	—	—	—	—	—
C 22 3	S3	MX3L	195	197.5	191.5	631.5	142	35	—	—	—	—	—	—

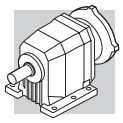

C 22...P(IEC)

P

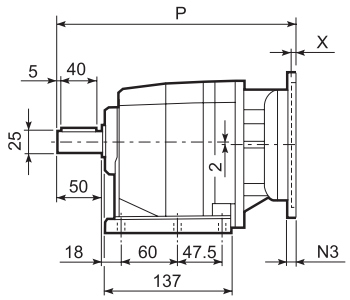

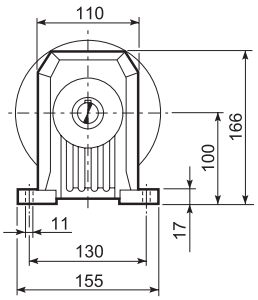

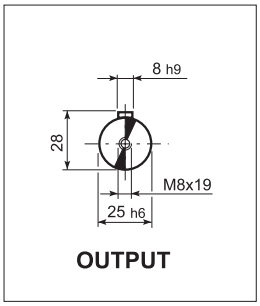

F

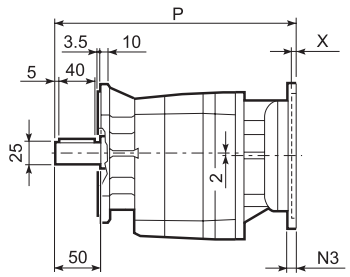

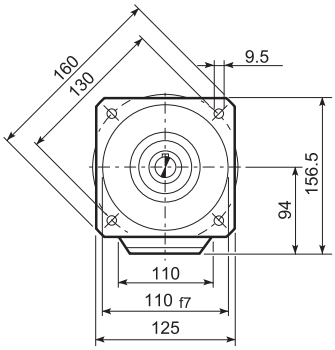

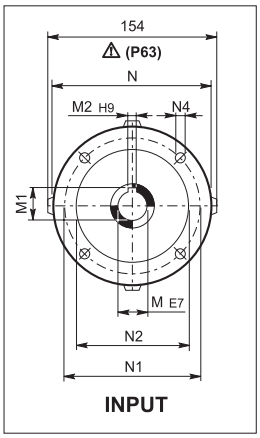

U

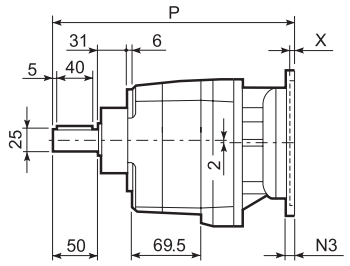

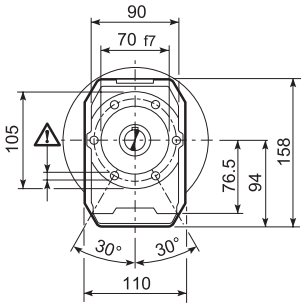

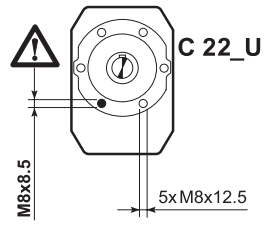

UF

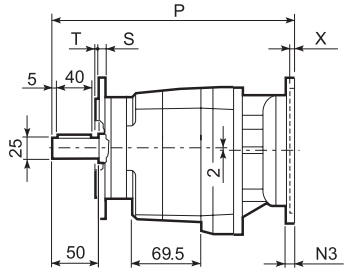

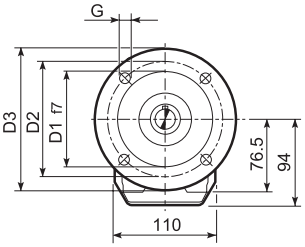

C 22_U						
	D1	D2	D3	G	T	S
FA	95	115	140	9	3	10
FB	110	130	160	9	3	10
FC	130	165	200	11	3.5	11

		M	M1	M2	N	N1	N2	N3	N4	X	P	kg
C 22 2	P63	11	12.8	4	140	115	95	—	M8x19	4	273	7
C 22 2	P71	14	16.3	5	160	130	110	—	M8x16	4.5	273	7
C 22 2	P80	19	21.8	6	200	165	130	—	M10x14.5	4	292.5	8
C 22 2	P90	24	27.3	8	200	165	130	—	M10x14.5	4	292.5	8
C 22 2	P100	28	31.3	8	250	215	180	—	M12X16	4.5	302.5	12
C 22 2	P112	28	31.3	8	250	215	180	—	M12X16	4.5	302.5	12
C 22 3	P63	11	12.8	4	140	115	95	—	M8x19	4	328.5	8
C 22 3	P71	14	16.3	5	160	130	110	—	M8x16	4.5	328.5	8
C 22 3	P80	19	21.8	6	200	165	130	—	M10x14.5	4	348	9
C 22 3	P90	24	27.3	8	200	165	130	—	M10x14.5	4	348	9
C 22 3	P100	28	31.3	8	250	215	180	—	M12x16	4.5	358	13
C 22 3	P112	28	31.3	8	250	215	180	—	M12x16	4.5	358	13

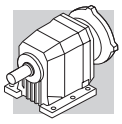

C 22...SK / SC

P

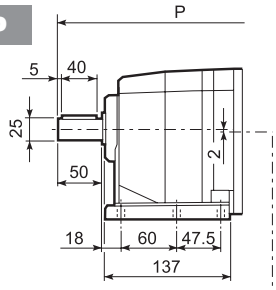

F

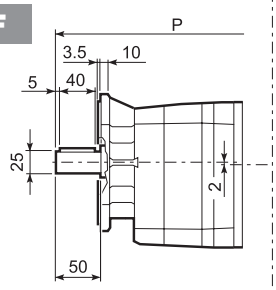

U

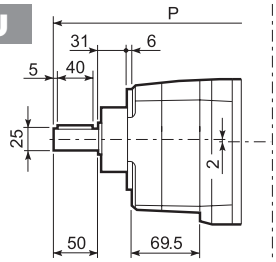

UF

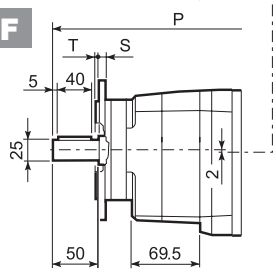

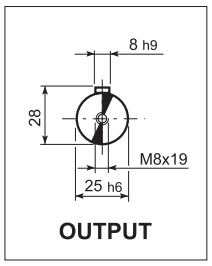

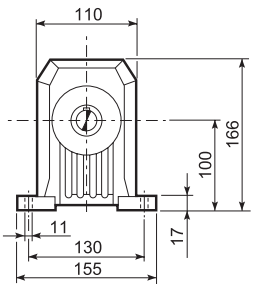

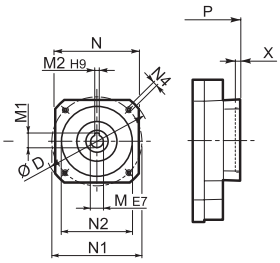

SK...

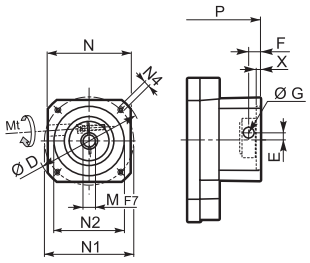

SC...

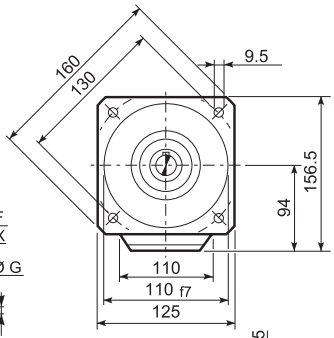

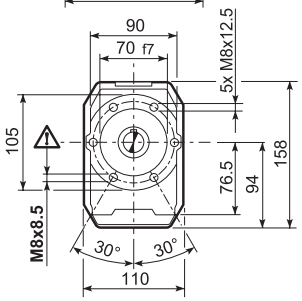

C 22_U						
	D1	D2	D3	G	T	S
FA	95	115	140	9	3	10
FB	110	130	160	9	3	10
FC	130	165	200	11	3.5	11

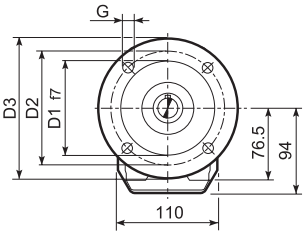

		D	M	M1	M2	N	N1	N2	N4	X	P 2x	P 3x	Kg
C 22 2/3	SK60A*	102	11	12.8	4	82	75	60	M5x10	3.5	224.5	300	6/9
C 22 2/3	SK60B*	102	14	16.3	5	82	75	60	M5x10	4	251.5	307	7/8
C 22 2/3	SK80A*	115	14	16.3	5	90	100	80	M6x12	4	251.5	307	7/8
C 22 2/3	SK80C	120	19	21.8	6	96	100	80	M6x12	4	292.5	348	8/9
C 22 2/3	SK95A	130	14	16.3	5	102	115	95	M8x12	4	292.5	348	8/9
C 22 2/3	SK95B	130	19	21.8	6	102	115	95	M8x12	4	292.5	348	8/9
C 22 2/3	SK95C	130	24	27.3	8	102	115	95	M8x12	4	292.5	348	8/9
C 22 2/3	SK110A	150	19	21.8	6	120	130	110	M8x12	5	292.5	348	8/9
C 22 2/3	SK110B	150	24	27.3	8	120	130	110	M8x12	5	292.5	348	8/9

			Mt [Nm]	D	E	F	G	M	N	N1	N2	N4	X	P 2x	P 3x	Kg
C 22 2/3	SC60A*	M6	15	102	7	12.5	12.5	11	82	75	60	M5x10	4	271.5	327	7/8
C 22 2/3	SC60B*	M6	15	102	7	12.5	12.5	14	82	75	60	M5x10	4	271.5	327	8/9
C 22 2/3	SC80A*	M6	15	115	6	12.5	12.5	14	90	100	80	M6x12	4	271.5	327	8/9
C 22 2/3	SC80C	M6	15	120	15.5	14.5	17.75	19	96	100	80	M6x12	4	316	371.5	9/10
C 22 2/3	SC95A	M6	15	130	16.5	15	17.75	14	102	115	95	M8x16	4	316	371.5	9/10
C 22 2/3	SC95B	M6	15	130	16.5	15	17.75	19	102	115	95	M8x16	4	316	371.5	9/10
C 22 2/3	SC95C	M6	15	130	16.5	15	17.75	24	102	115	95	M8x16	4	316	371.5	9/10
C 22 2/3	SC110A	M6	15	150	16.5	16	17.75	19	120	130	110	M8x16	5	316	371.5	10/11
C 22 2/3	SC110B	M6	15	150	16.5	16	17.75	24	120	130	110	M8x16	5	316	371.5	10/11

* 请联系我们的技术部门并告知工况数据。

Bonfiglioli Riduttori

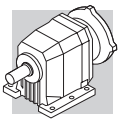

C 22...HS

P

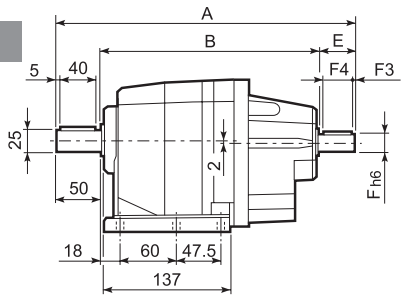

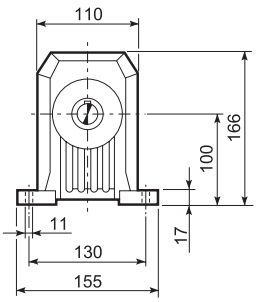

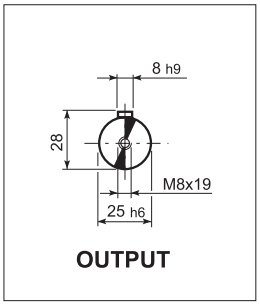

F

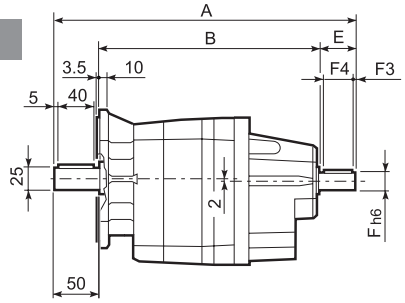

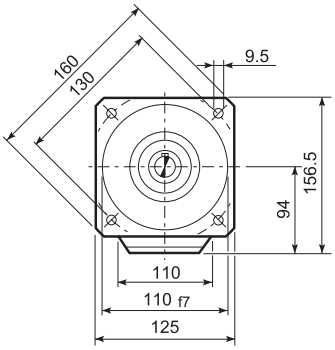

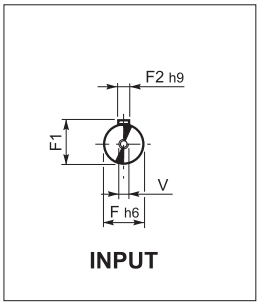

U

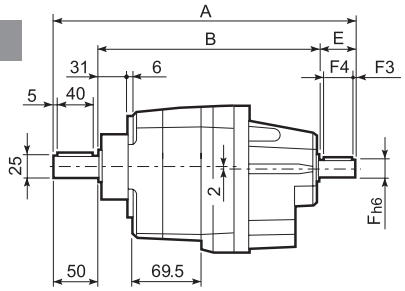

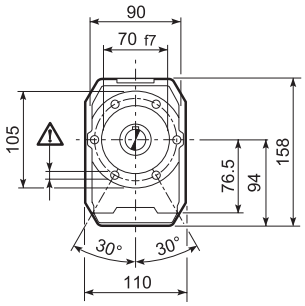

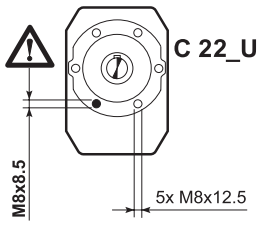

UF

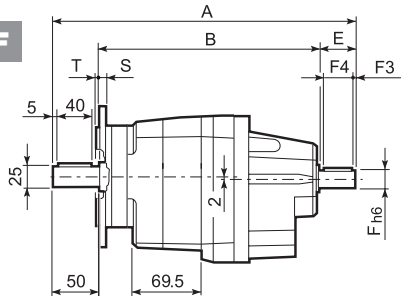

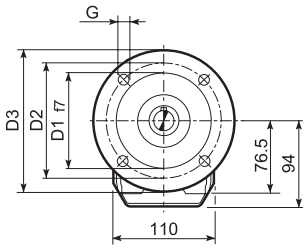

C 22_U

	D1	D2	D3	G	T	S
FA	95	115	140	9	3	10
FB	110	130	160	9	3	10
FC	130	165	200	11	3.5	11

		A	B	E	F	F1	F2	F3	F4	V	Kg
C 22 2	**HS**	323	233	40	19	21.5	6	2.5	35	M6x16	7.2
C 22 3		335.5	245.5	40	16	18	6	2.5	36	M6x16	7.5

C 32...M/ME/MX

P

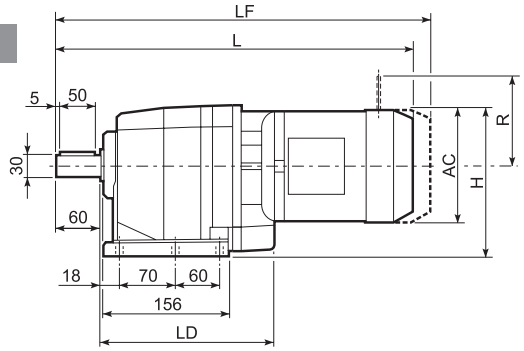

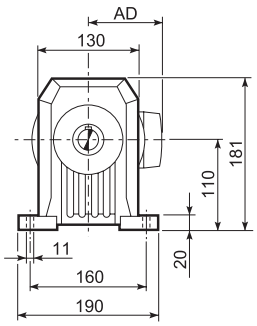

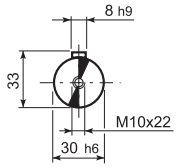

OUTPUT

F

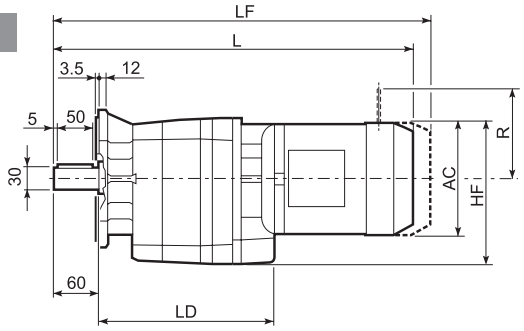

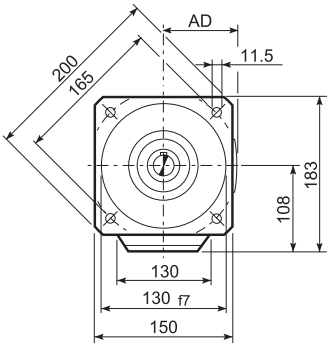

U

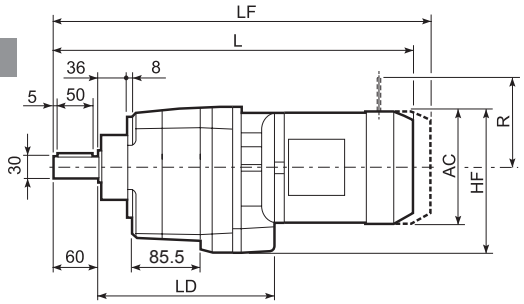

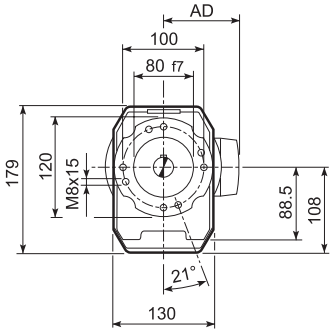

UF

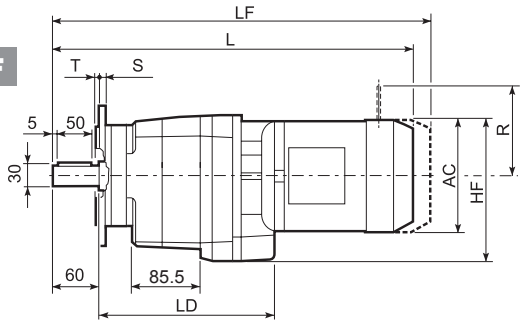

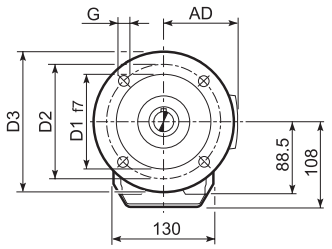

C 32_U

	D1	D2	D3	G	T	S
FA	110	130	160	9	3	10
FB	130	165	200	11	3.5	11
FC	180	215	250	14	4	13

											M...FD M...FA		M...FD		M...FA	
				AC	H	HF	L	LD	AD	Kg	LF	Kg	R	AD	R	AD
C 32 2	**S1**	**M1**		138	179	177	462.5	205.5	108	14	523.5	16	103	135	124	108
C 32 2	**S2**	**M2S**		156	188	186	490.5	217.5	119	18	561.5	21	129	146	134	119
C 32 2	**S2**	**ME2S**		156	188	186	490.5	217.5	119	18	—	—	—	—	—	—
C 32 2	**S2**	**MX2S**		156	188	186	534.5	217.5	119	23.1	—	—	—	—	—	—
C 32 2	**S3**	**ME3S**		195	207.5	205.5	534.5	227.5	142	24.5	—	—	—	—	—	—
C 32 2	**S3**	**MX3S**		195	207.5	205.5	566.5	227.5	142	27.5	—	—	—	—	—	—
C 32 2	**S3**	**ME3L**		195	207.5	205.5	566.5	227.5	142	32	—	—	—	—	—	—
C 32 2	**S3**	**MX3L**		195	207.5	205.5	610.5	227.5	142	38	—	—	—	—	—	—
C 32 2	**S4**	**ME4**	**MX4**	258	239	237	674.5	—	193	66	—	—	—	—	—	—
C 32 2	**S4**	**ME4LB**	**MX4LA**	258	239	237	709.5	—	193	74	—	—	—	—	—	—
C 32 3	**S05**	**M05**		121	170.5	168.5	491	—	95	13	557	15	96	122	116	95
C 32 3	**S1**	**M1**		138	179	177	520	—	108	15	581	17	103	135	124	108
C 32 3	**S2**	**ME2S**		156	188	186	548	—	119	18	—	—	—	—	—	—
C 32 3	**S2**	**MX2S**		156	188	186	592	—	119	23.1	—	—	—	—	—	—
C 32 3	**S3**	**ME3S**		195	207.5	205.5	592	—	142	25.5	—	—	—	—	—	—
C 32 3	**S3**	**MX3S**		195	207.5	205.5	624	—	142	28.5	—	—	—	—	—	—
C 32 3	**S3**	**ME3L**		195	207.5	205.5	624	—	142	33	—	—	—	—	—	—
C 32 3	**S3**	**MX3L**		195	207.5	205.5	668	—	142	39	—	—	—	—	—	—

Bonfiglioli Riduttori

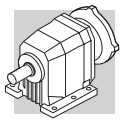

C 32...P(IEC)

P

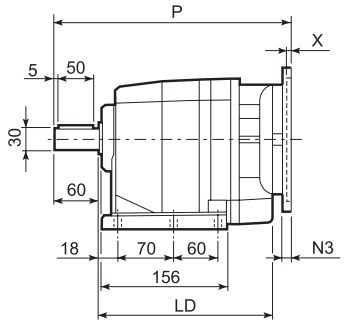

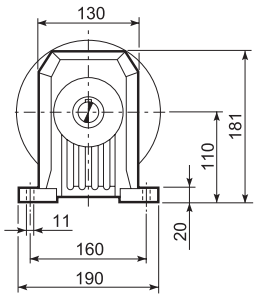

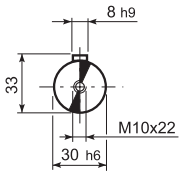

OUTPUT

F

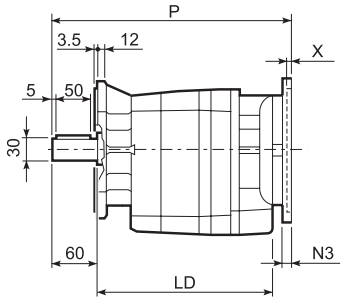

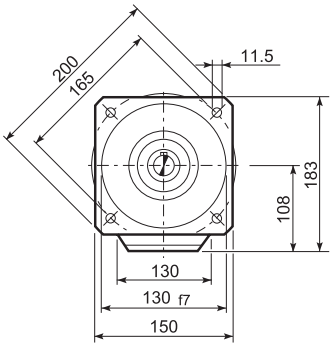

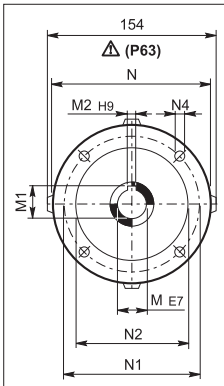

INPUT

U

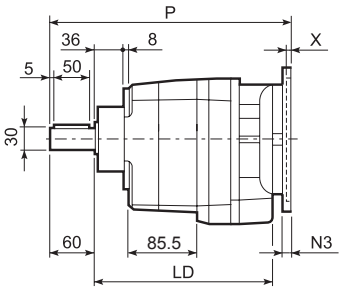

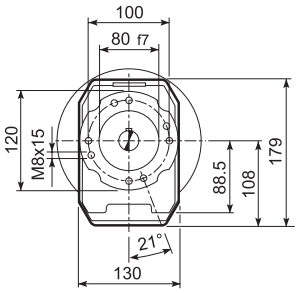

UF

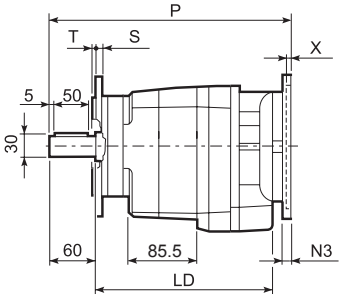

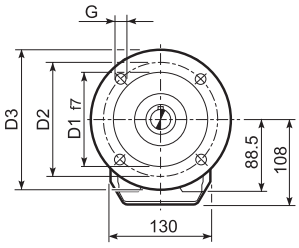

C 32_U						
	D1	D2	D3	G	T	S
FA	110	130	160	9	3	10
FB	130	165	200	11	3.5	11
FC	180	215	250	14	4	13

		LD	M	M1	M2	N	N1	N2	N3	N4	X	P	Kg
C 32 2	**P63**	217.5	11	12.8	4	140	115	95	—	M8x19	4	307.5	9
C 32 2	**P71**	217.5	14	16.3	5	160	130	110	—	M8x16	4.5	307.5	9
C 32 2	**P80**	227.5	19	21.8	6	200	165	130	—	M10x14.5	4	327	10
C 32 2	**P90**	227.5	24	27.3	8	200	165	130	—	M10x14.5	4	327	10
C 32 2	**P100**	227.5	28	31.3	8	250	215	180	—	M12x16	4.5	337	14
C 32 2	**P112**	227.5	28	31.3	8	250	215	180	—	M12x16	4.5	337	14
C 32 2	**P132**	—	38	41.3	10	300	265	230	16	14	5	373	17
C 32 3	**P63**	—	11	12.8	4	140	115	95	—	M8x19	4	365	10
C 32 3	**P71**	—	14	16.3	5	160	130	110	—	M8x16	4.5	365	10
C 32 3	**P80**	—	19	21.8	6	200	165	130	—	M10x14.5	4	384.5	11
C 32 3	**P90**	—	24	27.3	8	200	165	130	—	M10x14.5	4	384.5	11
C 32 3	**P100**	—	28	31.3	8	250	215	180	—	M12x16	4.5	394.5	15
C 32 3	**P112**	—	28	31.3	8	250	215	180	—	M12x16	4.5	394.5	15

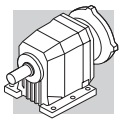

C 32...SK / SC

P

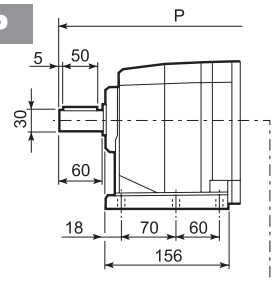

F

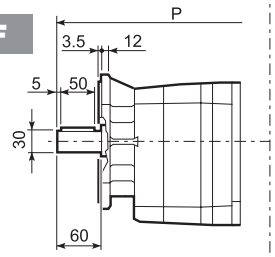

U

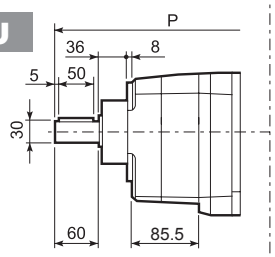

UF

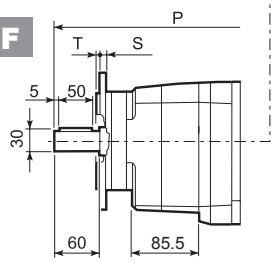

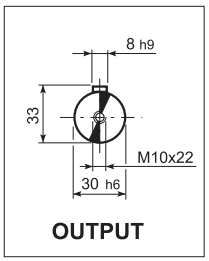

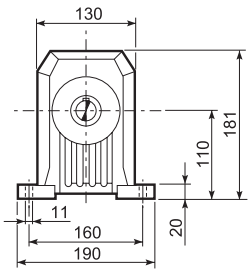

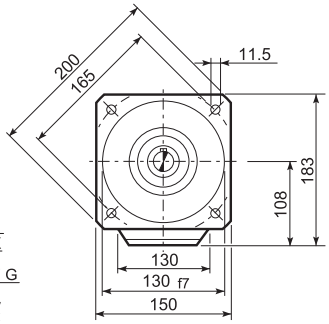

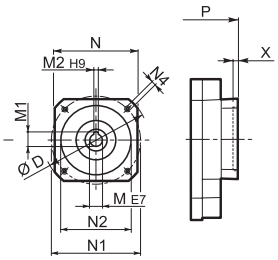

SK...

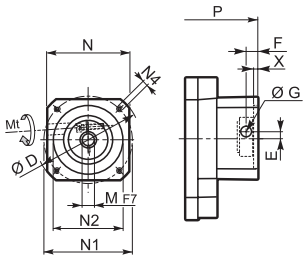

SC...

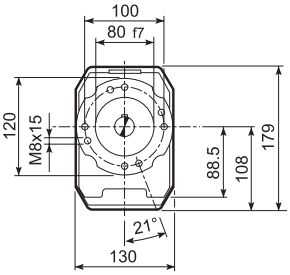

C 32_U

	D1	D2	D3	G	T	S
FA	110	130	160	9	3	10
FB	130	165	200	11	3.5	11
FC	180	215	250	14	4	13

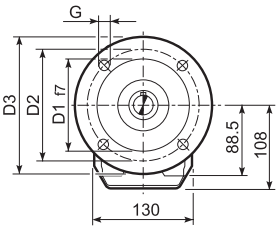

		D	M	M1	M2	N	N1	N2	N4	X	P 2x	P 3x	Kg
C 32 2/3	SK60A	102	11	12.8	4	82	75	60	M5x10	3.5	279	336.5	8/9
C 32 2/3	SK60B	102	14	16.3	5	82	75	60	M5x10	4	286	343.5	9/10
C 32 2/3	SK80A	115	14	16.3	5	90	100	80	M6x12	4	286	343.5	9/10
C 32 2/3	SK80C	120	19	21.8	6	96	100	80	M6x12	4	327	384.5	10/11
C 32 2/3	SK95A	130	14	16.3	5	102	115	95	M8x12	4	327	384.5	10/11
C 32 2/3	SK95B	130	19	21.8	6	102	115	95	M8x12	4	327	384.5	10/11
C 32 2/3	SK95C	130	24	27.3	8	102	115	95	M8x12	4	327	384.5	10/11
C 32 2/3	SK110A	150	19	21.8	6	120	130	110	M8x12	5	327	384.5	10/11
C 32 2/3	SK110B	150	24	27.3	8	120	130	110	M8x12	5	327	384.5	10/11
C 32 2	SK130A	188	24	27.3	8	142	165	130	M10x20	5	327	—	11

			Mt [Nm]	D	E	F	G	M	N	N1	N2	N4	X	P 2x	P 3x	Kg
C 32 2/3	SC60A	M6	15	102	7	12.5	12.5	11	82	75	60	M5x10	4	306	363.5	9/10
C 32 2/3	SC60B	M6	15	102	7	12.5	12.5	14	82	75	60	M5x10	4	306	363.5	10/11
C 32 2/3	SC80A	M6	15	115	6	12.5	12.5	14	90	100	80	M6x12	4	306	363.5	10/11
C 32 2/3	SC80C	M6	15	120	15.5	14.5	17.75	19	96	100	80	M6x12	4	350.5	408	11/12
C 32 2/3	SC95A	M6	15	130	16.5	15	17.75	14	102	115	95	M8x16	4	350.5	408	11/12
C 32 2/3	SC95B	M6	15	130	16.5	15	17.75	19	102	115	95	M8x16	4	350.5	408	11/12
C 32 2/3	SC95C	M6	15	130	16.5	15	17.75	24	102	115	95	M8x16	4	350.5	408	11/12
C 32 2/3	SC 110A	M6	15	150	16.5	16	17.75	19	120	130	110	M8x16	5	350.5	408	12/13
C 32 2/3	SC 110B	M6	15	150	16.5	16	17.75	24	120	130	110	M8x16	5	350.5	408	12/13
C 32 2	SC 130A	M6	15	188	19	16	17.75	24	142	165	130	M10x20	5	350.5	—	13

C 32...HS

P

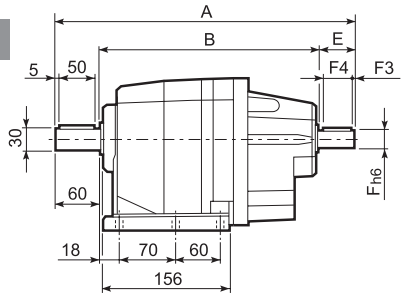

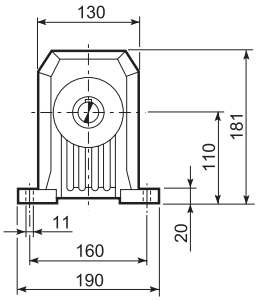

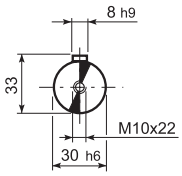

OUTPUT

F

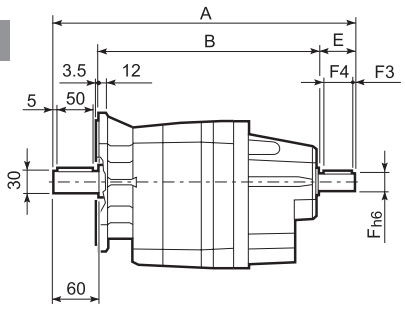

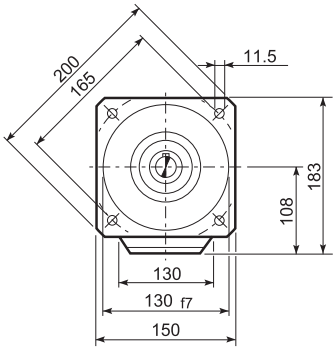

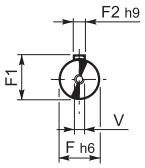

INPUT

U

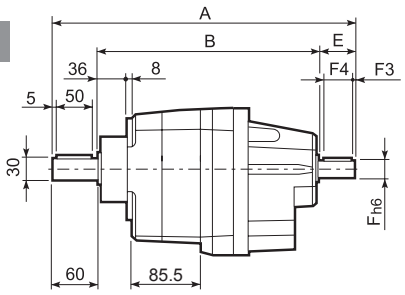

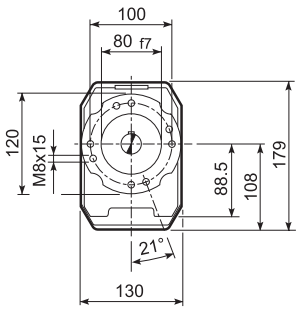

UF

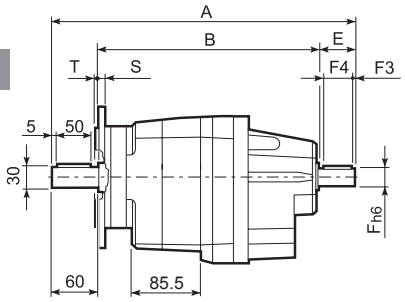

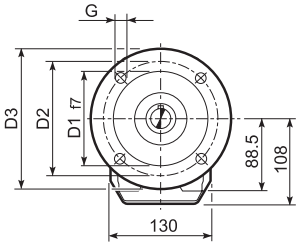

C 32_U						
	D1	D2	D3	G	T	S
FA	110	130	160	9	3	10
FB	130	165	200	11	3.5	11
FC	180	215	250	14	4	13

		A	B	E	F	F1	F2	F3	F4	V	Kg
C 32 2	HS	357.5	257.5	40	19	21.5	6	2.5	35	M6x16	11.1
C 32 3		372	272	40	16	18	5	2.5	35	M6x16	10.6

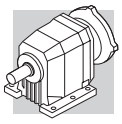

C 36...M/ME/MX

P

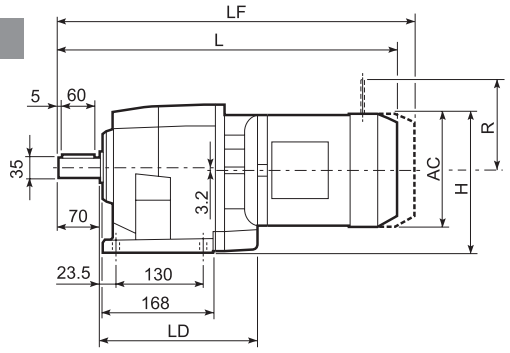

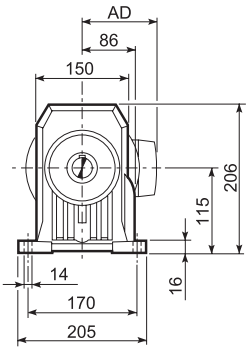

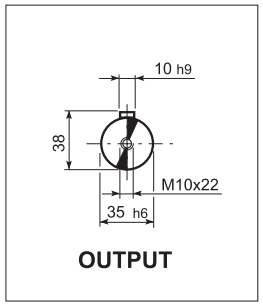

U

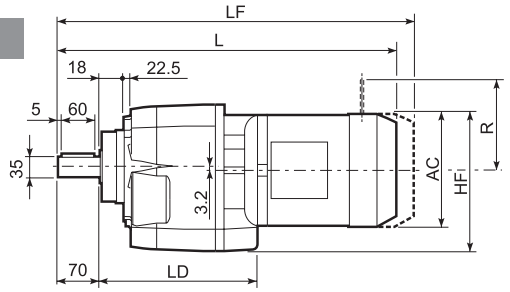

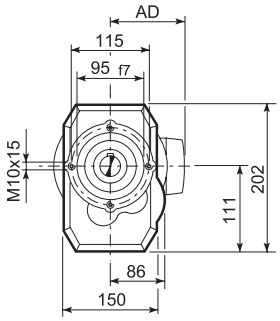

UF

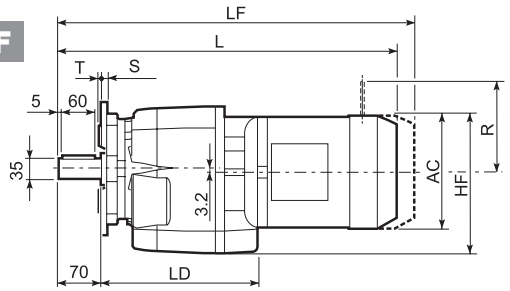

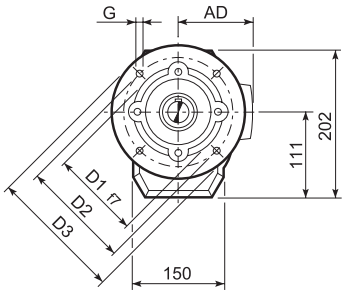

C 36_U						
	D1	D2	D3	G	T	S
FA	130	165	200	11	3.5	11
FB	180	215	250	14	4	14

											M...FD M...FA		M...FD		M...FA	
				AC	H	HF	L	LD	AD	Kg	LF	Kg	R	AD	R	AD
C 36 2/3	S1	M1		138	184	177	481	214	108	20	542	21	103	135	124	108
C 36 2/3	S2	ME2S		156	193	186	509	226	119	23	—	—	—	—	—	—
C 36 2/3	S2	MX2S		156	193	186	553	226	119	28.1	—	—	—	—	—	—
C 36 2/3	S3	ME3S		195	212.5	205.5	553	236	142	29.5	—	—	—	—	—	—
C 36 2/3	S3	MX3S		195	212.5	205.5	585	236	142	32.5	—	—	—	—	—	—
C 36 2/3	S3	ME3L		195	212.5	205.5	585	236	142	37	—	—	—	—	—	—
C 36 2/3	S3	MX3L		195	212.5	205.5	629	236	142	43	—	—	—	—	—	—
C 36 2/3	S4	ME4	MX4	258	244	240	693.5	—	193	71	—	—	—	—	—	—
C 36 2/3	S4	ME4LB	MX4LA	258	244	240	728.5	—	193	79	—	—	—	—	—	—
C 36 4	S05	M05		121	175.5	168.5	509.5	—	95	19	575.5	20	96	122	116	95
C 36 4	S1	M1		138	184	177	538.5	—	108	21	599.5	22	103	135	124	108
C 36 4	S2	ME2S		156	193	186	566.5	—	119	24	—	—	—	—	—	—
C 36 4	S2	MX2S		156	193	186	610.5	—	119	29.1	—	—	—	—	—	—
C 36 4	S3	ME3S		195	212.5	205.5	610.5	—	142	30.5	—	—	—	—	—	—
C 36 4	S3	MX3S		195	212.5	205.5	642.5	—	142	33.5	—	—	—	—	—	—
C 36 4	S3	ME3L		195	212.5	205.5	642.5	—	142	38	—	—	—	—	—	—
C 36 4	S3	MX3L		195	212.5	205.5	686.5	—	142	44	—	—	—	—	—	—

Bonfiglioli Riduttori

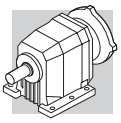

C 36...P(IEC)

P

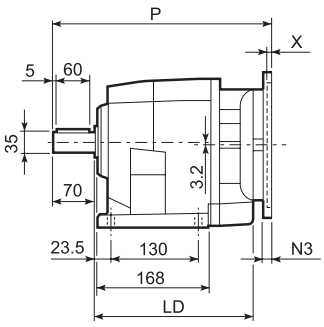

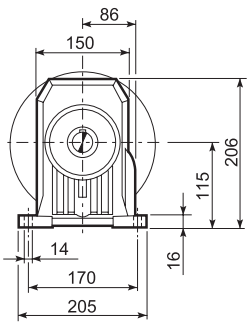

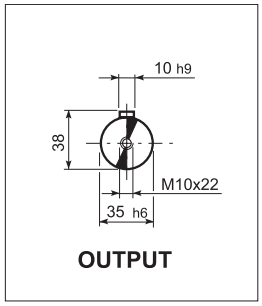

U

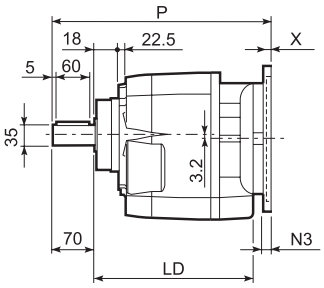

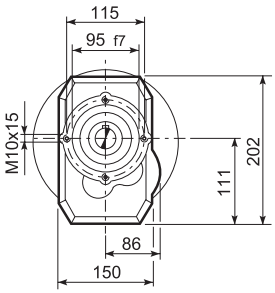

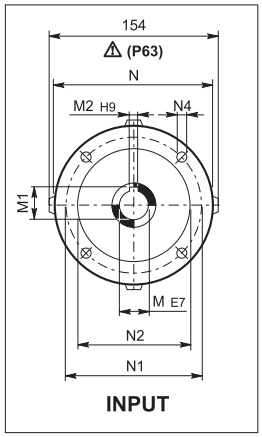

UF

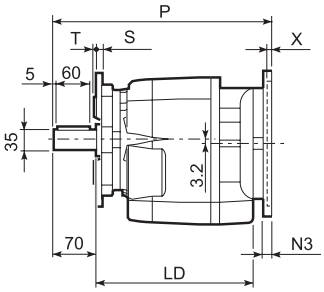

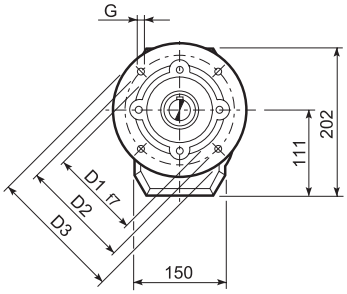

C 36_U

	D1	D2	D3	G	T	S
FA	130	165	200	11	3.5	11
FB	180	215	250	14	4	14

		LD	M	M1	M2	N	N1	N2	N3	N4	X	P	Kg
C 36 2/3	P63	226	11	12.8	4	140	115	95	—	M8x19	4	326	17
C 36 2/3	P71	226	14	16.3	5	160	130	110	—	M8x16	4.5	326	17
C 36 2/3	P80	236	19	21.8	6	200	165	130	—	M10x14.5	4	345.5	18
C 36 2/3	P90	236	24	27.3	8	200	165	130	—	M10x14.5	4	345.5	18
C 36 2/3	P100	236	28	31.3	8	250	215	180	—	M12x16	4.5	355.5	22
C 36 2/3	P112	236	28	31.3	8	250	215	180	—	M12x16	4.5	355.5	22
C 36 2/3	P132	—	38	41.3	10	300	265	230	16	14	5	392.5	25
C 36 4	P63	—	11	12.8	4	140	115	95	—	M8x19	4	383.5	20
C 36 4	P71	—	14	16.3	5	160	130	110	—	M8x16	4.5	383.5	20
C 36 4	P80	—	19	21.8	6	200	165	130	—	M10x14.5	4	403	21
C 36 4	P90	—	24	27.3	8	200	165	130	—	M10x14.5	4	403	21
C 36 4	P100	—	28	31.3	8	250	215	180	—	M12x16	4.5	413	25
C 36 4	P112	—	28	31.3	8	250	215	180	—	M12x16	4.5	413	25

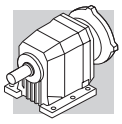

C 36...SK / SC

P

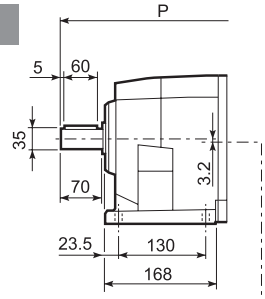

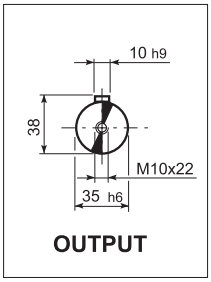

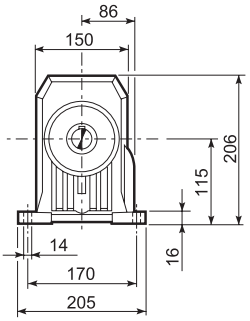

U

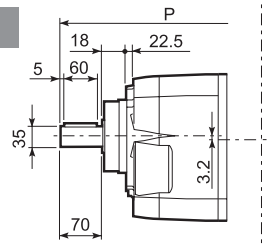

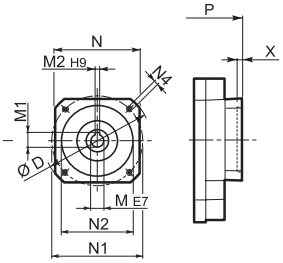

SK...

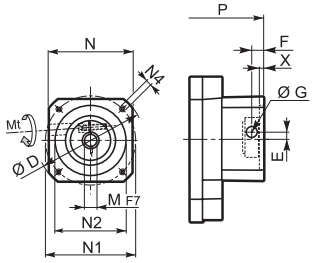

SC...

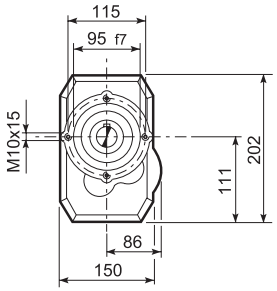

UF

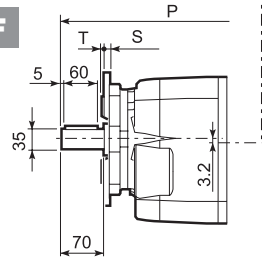

	D1	D2	D3	G	T	S
FA	130	165	200	11	3.5	11
FB	180	215	250	14	4	14

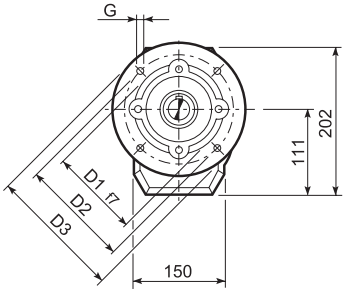

		D	M	M1	M2	N	N1	N2	N4	X	P 2/3x	P 4x	Kg
C 36 2/3/4	**SK60A**	102	11	12.8	4	82	75	60	M5x10	3.5	297.5	355	16/16/19
C 36 2/3/4	**SK60B**	102	14	16.3	5	82	75	60	M5x10	4	304.5	362	17/17/20
C 36 2/3/4	**SK80A**	115	14	16.3	5	90	100	80	M6x12	4	304.5	362	18/18/21
C 36 2/3/4	**SK80C**	120	19	21.8	6	96	100	80	M6x12	4	304.5	403	18/18/21
C 36 2/3/4	**SK95A**	130	14	16.3	5	102	115	95	M8x12	4	345.5	403	18/18/21
C 36 2/3/4	**SK95B**	130	19	21.8	6	102	115	95	M8x12	4	345.5	403	18/18/21
C 36 2/3/4	**SK95C**	130	24	27.3	8	102	115	95	M8x12	4	345.5	403	18/18/21
C 36 2/3/4	**SK110A**	150	19	21.8	6	120	130	110	M8x12	5	345.5	403	18/18/21
C 36 2/3/4	**SK110B**	150	24	27.3	8	120	130	110	M8x12	5	345.5	403	18/18/21
C 36 2/3	**SK130A**	188	24	27.3	8	142	165	130	M10x20	5	345.5	—	19/19

			Mt [Nm]	D	E	F	G	M	N	N1	N2	N4	X	P 2/3x	P 4x	Kg
C 36 2/3/4	**SC60A**	M6	15	102	7	12.5	12.5	11	82	75	60	M5x10	4	324.5	382	17/17/20
C 36 2/3/4	**SC60B**	M6	15	102	7	12.5	12.5	14	82	75	60	M5x10	4	324.5	382	18/18/21
C 36 2/3/4	**SC80A**	M6	15	115	6	12.5	12.5	14	90	100	80	M6x12	4	324.5	426.5	18/18/21
C 36 2/3/4	**SC80C**	M6	15	120	15.5	14.5	17.75	19	96	100	80	M6x12	4	369	426.5	19/19/22
C 36 2/3/4	**SC95A**	M6	15	130	16.5	15	17.75	14	102	115	95	M8x16	4	369	426.5	19/19/22
C 36 2/3/4	**SC95B**	M6	15	130	16.5	15	17.75	19	102	115	95	M8x16	4	369	426.5	19/19/22
C 36 2/3/4	**SC95C**	M6	15	130	16.5	15	17.75	24	102	115	95	M8x16	4	369	426.5	19/19/22
C 36 2/3/4	**SC110A**	M6	15	150	16.5	16	17.75	19	120	130	110	M8x16	5	369	426.5	21/21/24
C 36 2/3/4	**SC110B**	M6	15	150	16.5	16	17.75	24	120	130	110	M8x16	5	369	426.5	21/21/24
C 36 2/3	**SC130A**	M6	15	188	19	16	17.75	24	142	165	130	M10x20	5	369	—	22/22

C 36...HS

P

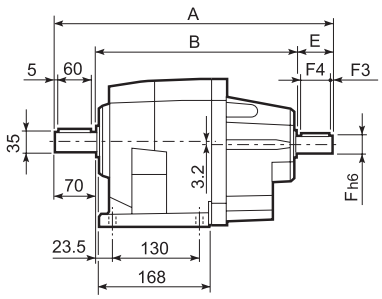

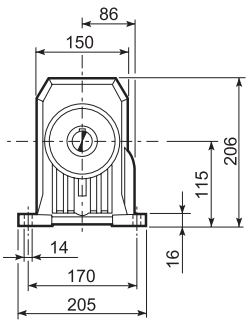

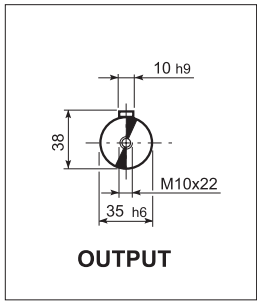

U

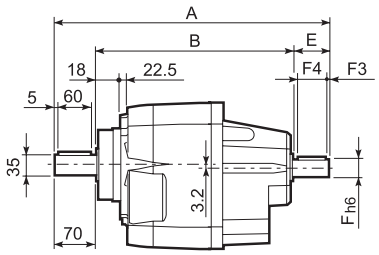

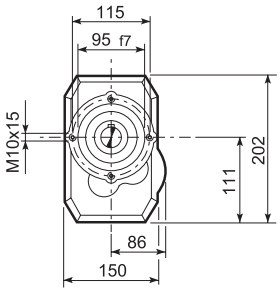

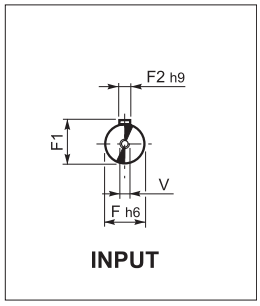

UF

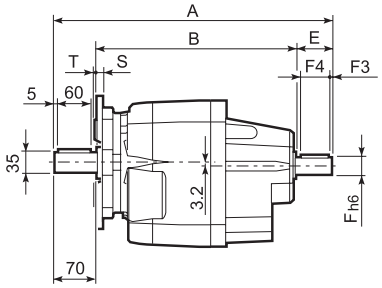

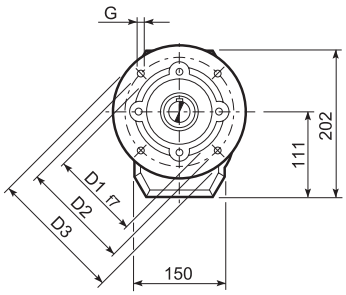

C 36_U						
	D1	D2	D3	G	T	S
FA	130	165	200	11	3.5	11
FB	180	215	250	14	4	14

		A	B	E	F	F1	F2	F3	F4	V	Kg
C 36 2	HS	415.5	295.5	50	24	27	8	2.5	45	M8x19	25.5
C 36 3		415.5	295.5	50	24	27	8	2.5	45	M8x19	25.5
C 36 4		390.5	280.5	40	16	18	5	2.5	36	M6x16	26.5

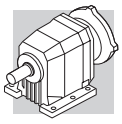

C 41...M/ME/MX

P

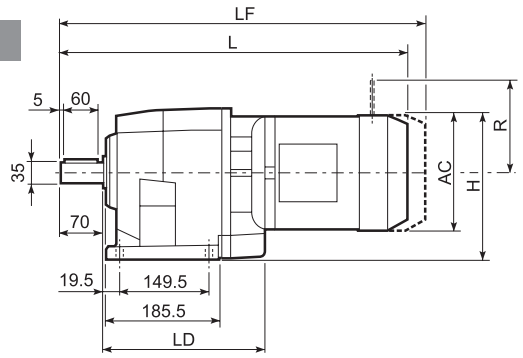

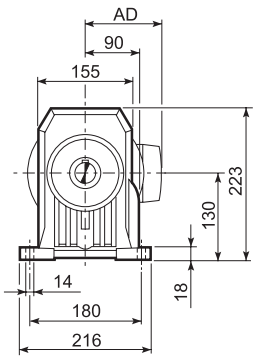

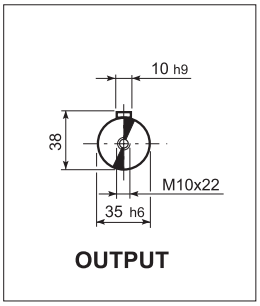

U

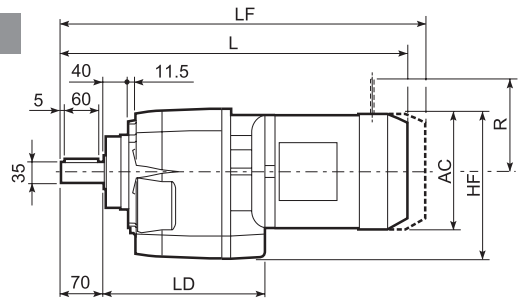

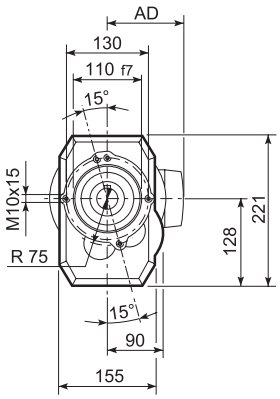

UF

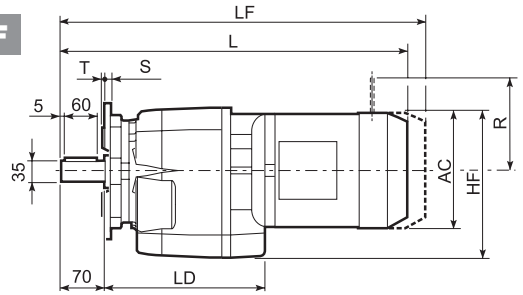

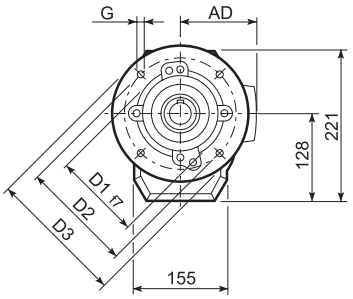

C 41_U

	D1	D2	D3	G	T	S
FA	130	165	200	11	3.5	11
FB	180	215	250	14	4	13

										M...FD M...FA		M...FD		M...FA	
				AC	H	HF	L	LD	AD	Kg	LF	Kg	R	AD	R	AD
C 41 2/3	**S1**	**M1**		138	199	197	491.5	220	108	25	552.5	28	103	135	124	108
C 41 2/3	**S2**	**ME2S**		156	208	206	519.5	235.5	119	31	—	—	—	—	—	—
C 41 2/3	**S2**	**MX2S**		156	208	206	563.5	235.5	119	36.1	—	—	—	—	—	—
C 41 2/3	**S3**	**ME3S**		195	227.5	225.5	563.5	251.5	142	37.5	—	—	—	—	—	—
C 41 2/3	**S3**	**MX3S**		195	227.5	225.5	595.5	251.5	142	40.5	—	—	—	—	—	—
C 41 2/3	**S3**	**ME3L**		195	227.5	225.5	595.5	251.5	142	45	—	—	—	—	—	—
C 41 2/3	**S3**	**MX3L**		195	227.5	225.5	639.5	251.5	142	51	—	—	—	—	—	—
C 41 2/3	**S4**	**ME4**	**MX4**	258	259	257	703.5	—	193	71	—	—	—	—	—	—
C 41 2/3	**S4**	**ME4LB**	**MX4LA**	258	259	257	739	—	193	78	—	—	—	—	—	—
C 41 4	**S05**	**M05**		231	245.5	243.5	524	—	95	27	590	28	96	122	116	95
C 41 4	**S1**	**M1**		138	199	197	553	—	108	28	614	31	103	135	124	108
C 41 4	**S2**	**ME2S**		156	208	206	581	—	119	34	—	—	—	—	—	—
C 41 4	**S2**	**MX2S**		156	208	206	625	—	119	39.1	—	—	—	—	—	—
C 41 4	**S3**	**ME3S**		195	227.5	225.5	625	—	142	40.5	—	—	—	—	—	—
C 41 4	**S3**	**MX3S**		195	227.5	225.5	657	—	142	43.5	—	—	—	—	—	—
C 41 4	**S3**	**ME3L**		195	227.5	225.5	657	—	142	48	—	—	—	—	—	—
C 41 4	**S3**	**MX3L**		195	227.5	225.5	701	—	142	54	—	—	—	—	—	—

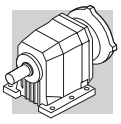

C 41...P(IEC)

P

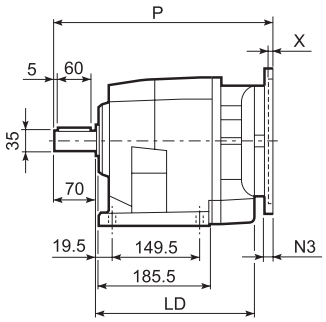

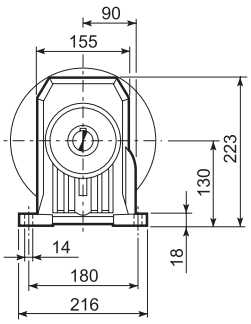

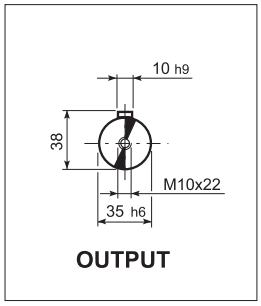

U

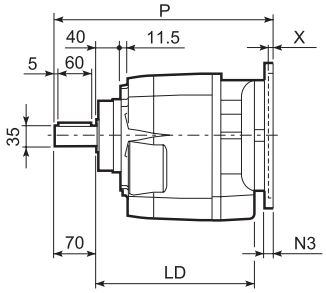

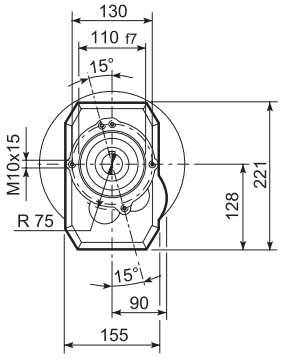

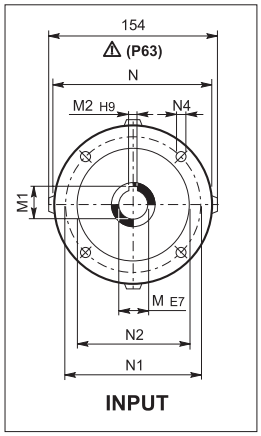

UF

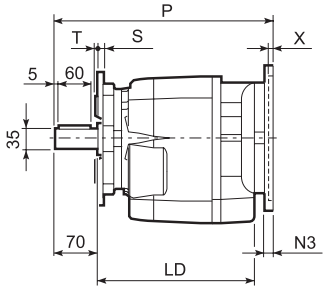

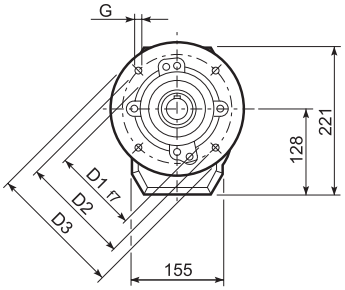

C 41_U						
	D1	D2	D3	G	T	S
FA	130	165	200	11	3.5	11
FB	180	215	250	14	4	13

		LD	M	M1	M2	N	N1	N2	N3	N4	X	P	Kg
C 41 2/3	P63	235.5	11	12.8	4	140	115	95	—	M8x19	4	336.5	27
C 41 2/3	P71	235.5	14	16.3	5	160	130	110	—	M8x16	4.5	336.5	28
C 41 2/3	P80	251.5	19	21.8	6	200	165	130	—	M10x14.5	4	356	29
C 41 2/3	P90	251.5	24	27.3	8	200	165	130	—	M10x14.5	4	356	29
C 41 2/3	P100	—	28	31.3	8	250	215	180	—	M12x16	4.5	366	33
C 41 2/3	P112	—	28	31.3	8	250	215	180	—	M12x16	4.5	366	33
C 41 2/3	P132	—	38	41.3	10	300	265	230	16	14	5	402.5	35
C 41 4	P63	—	11	12.8	4	140	115	95	—	M8x19	4	395	30
C 41 4	P71	—	14	16.3	5	160	130	110	—	M8x16	4.5	395	31
C 41 4	P80	—	19	21.8	6	200	165	130	—	M10x14.5	4	414.5	32
C 41 4	P90	—	24	27.3	8	200	165	130	—	M10x14.5	4	414.5	32
C 41 4	P100	—	28	31.3	8	250	215	180	—	M12x16	4.5	424.5	36
C 41 4	P112	—	28	31.3	8	250	215	180	—	M12x16	4.5	424.5	36

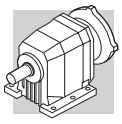

C 41...SK / SC

P

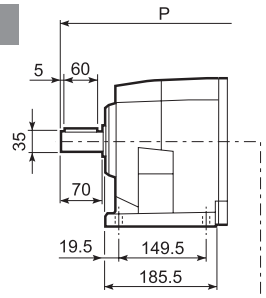

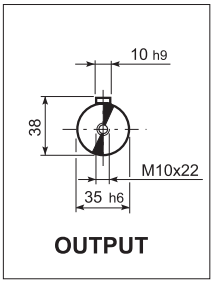

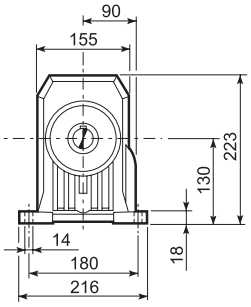

U

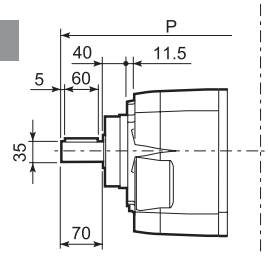

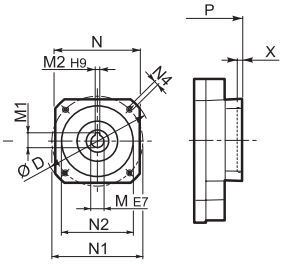

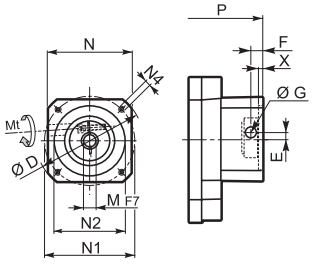

SK...

SC...

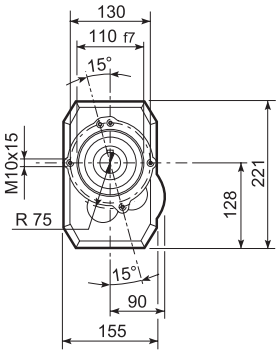

UF

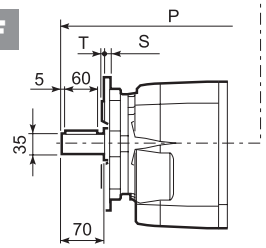

C 41_U						
	D1	D2	D3	G	T	S
FA	130	165	200	11	3.5	11
FB	180	215	250	14	4	13

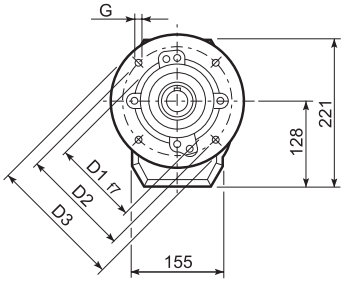

		D	M	M1	M2	N	N1	N2	N4	X	P 2/3x	P 4x	Kg
C41 4	SK60A	102	11	12.8	4	82	75	60	M5x10	3.5	—	370	31
C41 4	SK60B	102	14	16.3	5	82	75	60	M5x10	4	—	377	32
C41 4	SK80A	115	14	16.3	5	90	100	80	M6x12	4	—	377	32
C41 2/3	SK80B	120	14	16.3	5	96	100	80	M6x12	4	356.5	—	29/29
C41 2/3/4	SK80C	120	19	21.8	6	96	100	80	M6x12	4	356.5	418	29/29/32
C41 2/3/4	SK95A	130	14	16.3	5	102	115	95	M8x12	4	356.5	418	29/29/32
C41 2/3/4	SK95B	130	19	21.8	6	102	115	95	M8x12	4	356.5	418	29/29/33
C41 2/3/4	SK95C	130	24	27.3	8	102	115	95	M8x12	4	356.5	418	29/29/36
C41 2/3/4	SK110A	150	19	21.8	6	120	130	110	M8x12	5	356.5	418	29/29/36
C41 2/3/4	SK110B	150	24	27.3	8	120	130	110	M8x12	5	356.5	418	29/29/36
C41 2/3	SK130A	188	24	27.3	8	142	165	130	M10x20	5	356.5	—	31/31
C41 2/3	SK130B	189	32	35.3	10	160	165	130	M10x20	5	403	—	33/33
C41 2/3	SK180A	240	32	35.3	10	192	215	180	M12x19	5	403	—	33/33
C41 2/3	SK180B	240	38	41.3	10	192	215	180	M12x19	5	403	—	38/38

			Mt [Nm]	D	E	F	G	M	N	N1	N2	N4	X	P 2/3x	P 4x	Kg
C41 4	SC60A	M6	15	102	7	12.5	12.5	11	82	75	60	M5x10	4	—	397	32
C41 4	SC60B	M6	15	102	7	12.5	12.5	14	82	75	60	M5x10	4	—	397	33
C41 4	SC80A	M6	15	115	6	12.5	12.5	14	90	100	80	M6x12	4	—	397	33
C41 2/3	SC80B	M6	15	120	15.5	14.5	17.75	14	96	100	80	M6x12	4	380	—	30/30
C41 2/3/4	SC80C	M6	15	120	15.5	14.5	17.75	19	96	100	80	M6x12	4	380	441.5	30/30/33
C41 2/3/4	SC95A	M6	15	130	16.5	15	17.75	14	102	115	95	M8x16	4	380	441.5	30/30/34
C41 2/3/4	SC95B	M6	15	130	16.5	15	17.75	19	102	115	95	M8x16	4	380	441.5	30/30/34
C41 2/3/4	SC95C	M6	15	130	16.5	15	17.75	24	102	115	95	M8x16	4	380	441.5	30/30/35
C41 2/3/4	SC110A	M6	15	150	16.5	16	17.75	19	120	130	110	M8x16	5	380	441.5	31/31/39
C41 2/3/4	SC110B	M6	15	150	16.5	16	17.75	24	120	130	110	M8x16	5	380	441.5	31/31/39
C41 2/3	SC130A	M6	15	188	19	16	17.75	24	142	165	130	M10x20	5	380	—	32/32
C41 2/3	SC130B	M8	36	189	20	17	17.75	32	160	165	130	M10x20	5	426	—	36/36
C41 2/3	SC180A	M8	36	240	20	17.5	17.75	32	192	215	180	M12x24	5	430	—	36/36
C41 2/3	SC180B	M8	36	240	20	17.5	17.75	38	192	215	180	M12x24	5	430	—	35/35

C 41...HS

P

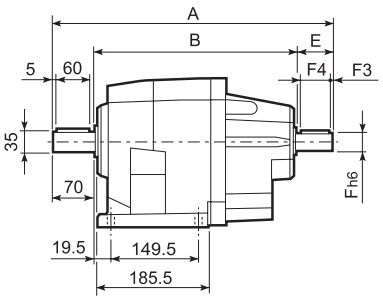

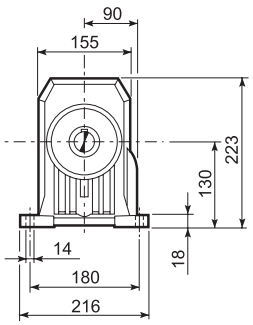

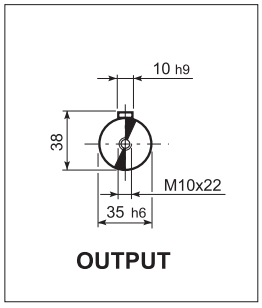

U

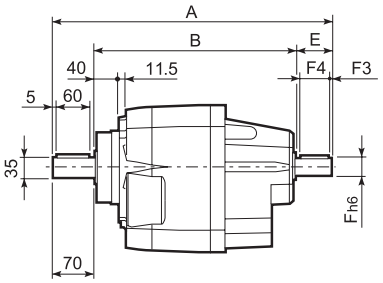

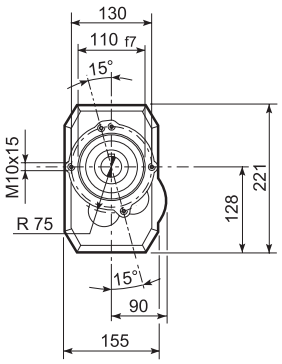

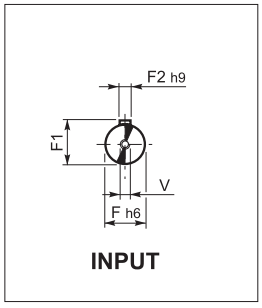

UF

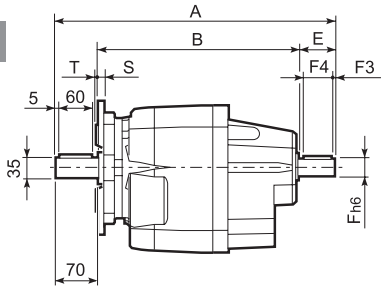

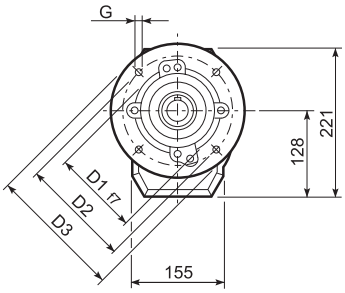

C 41_U

	D1	D2	D3	G	T	S
FA	130	165	200	11	3.5	11
FB	180	215	250	14	4	13

		A	B	E	F	F1	F2	F3	F4	V	Kg
C 41 2	**HS**	425.5	305.5	50	24	27	8	2.5	45	M8x19	30
C 41 3		425.5	305.5	50	24	27	8	2.5	45	M8x19	30
C 41 4		448	338	40	19	21.5	6	2.5	35	M6x16	33

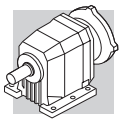

C 51...M/ME/MX

P

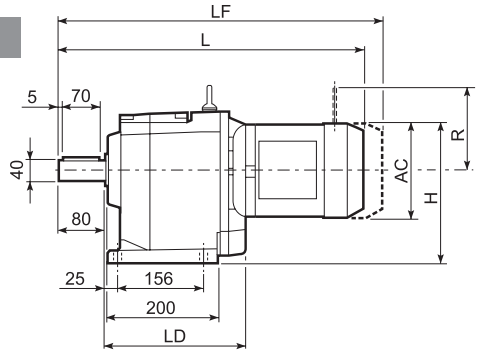

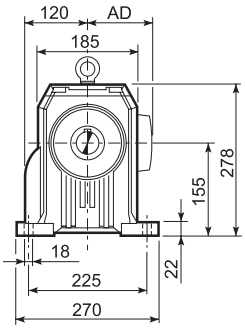

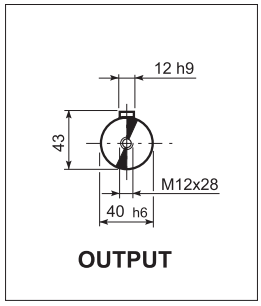

U

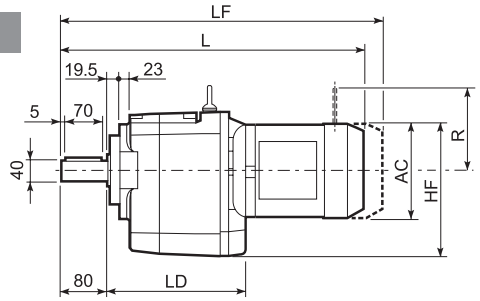

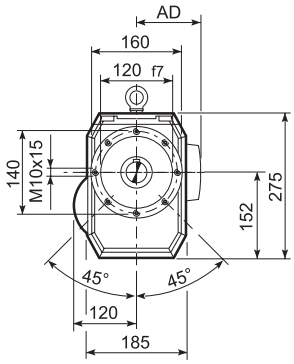

UF

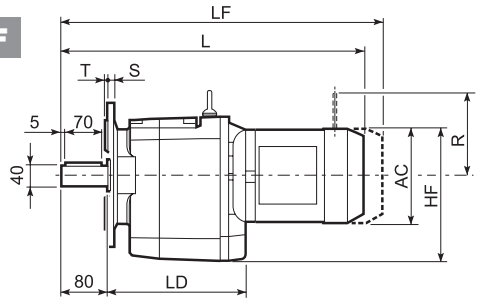

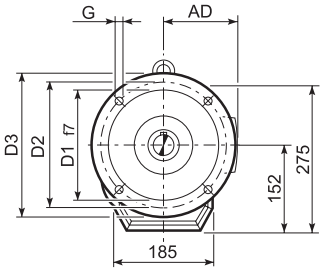

C 51_U						
	D1	D2	D3	G	T	S
FA	180	215	250	14	4	13
FB	230	265	300	14	4	16

										M...FD M...FA		M...FD		M...FA	
				AC	H	HF	L	LD	AD	Kg	LF	Kg	R	AD	R	AD
C 51 2/3	S1	M1		138	224	221	517.5	—	108	49	578.5	52	103	135	124	108
C 51 2/3	S2	ME2S		156	233	230	545.5	252.5	119	53	—	—	—	—	—	—
C 51 2/3	S2	MX2S		156	233	230	589.5	252.5	119	53	—	—	—	—	—	—
C 51 2/3	S3	ME3S		195	252.5	249.5	589.5	267.5	142	59.5	—	—	—	—	—	—
C 51 2/3	S3	MX3S		195	252.5	249.5	621.5	267.5	142	59.5	—	—	—	—	—	—
C 51 2/3	S3	ME3L		195	252.5	249.5	621.5	267.5	142	65	—	—	—	—	—	—
C 51 2/3	S3	MX3L		195	252.5	249.5	665.5	267.5	142	65	—	—	—	—	—	—
C 51 2/3	S4	ME4	MX4	258	284	281	729.5	—	193	99	—	—	—	—	—	—
C 51 2/3	S4	ME4LB	MX4LA	258	284	281	764.5	—	193	107	—	—	—	—	—	—
C 51 2/3	S5	ME5S	MX5S	310	310	307	816	—	245	127	—	—	—	—	—	—
C 51 2/3	S5	ME5L	MX5L	310	310	307	860	—	245	143	—	—	—	—	—	—
C 51 4	S1	M1		138	224	221	589	—	108	52	650	55	103	135	124	108
C 51 4	S2	ME2S		156	233	230	617	—	119	56	—	—	—	—	—	—
C 51 4	S2	MX2S		156	233	230	661	—	119	56	—	—	—	—	—	—
C 51 4	S3	ME3S		195	252.5	249.5	661	—	142	62.5	—	—	—	—	—	—
C 51 4	S3	MX3S		195	252.5	249.5	693	—	142	62.5	—	—	—	—	—	—
C 51 4	S3	ME3L		195	252.5	249.5	693	—	142	68	—	—	—	—	—	—
C 51 4	S3	MX3L		195	252.5	249.5	737	—	142	68	—	—	—	—	—	—

C 51...P(IEC)

P

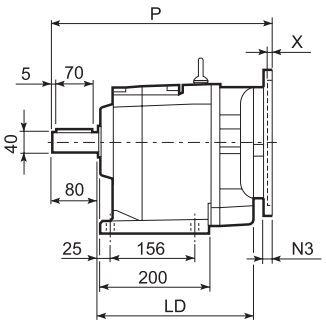

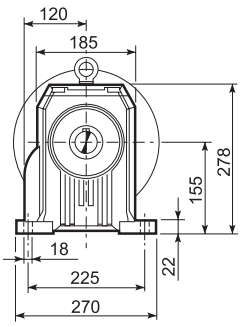

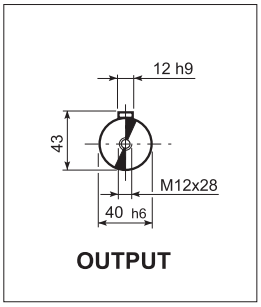

U

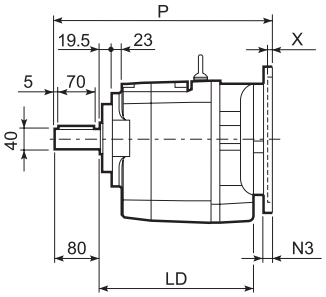

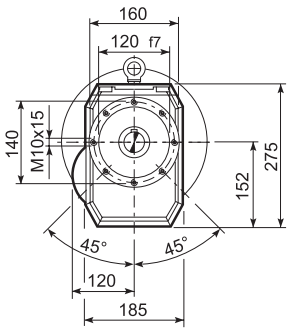

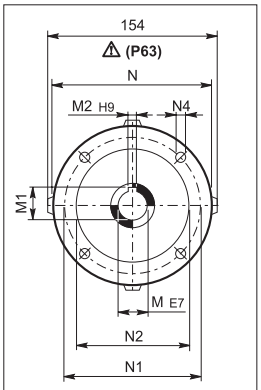

UF

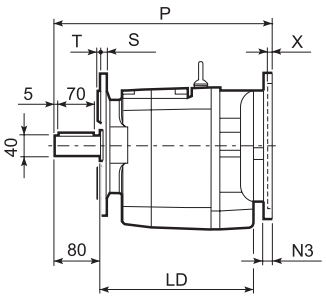

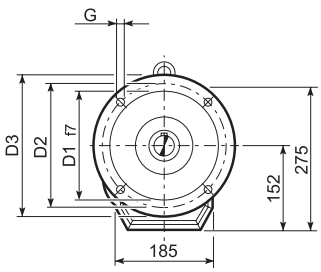

C 51_U						
	D1	D2	D3	G	T	S
FA	180	215	250	14	4	13
FB	230	265	300	14	4	16

		LD	M	M1	M2	N	N1	N2	N3	N4	X	P	Kg
C 51 2/3	**P63**	252.5	11	12.8	4	140	115	95	—	M8x19	4	362.5	45
C 51 2/3	**P71**	252.5	14	16.3	5	160	130	110	—	M8x16	4.5	362.5	45
C 51 2/3	**P80**	267.5	19	21.8	6	200	165	130	—	M10x14.5	4	382	47
C 51 2/3	**P90**	267.5	24	27.3	8	200	165	130	—	M10x14.5	4	382	47
C 51 2/3	**P100**	252.5	28	31.3	8	250	215	180	—	M12x16	4.5	392	51
C 51 2/3	**P112**	252.5	28	31.3	8	250	215	180	—	M12x16	4.5	392	51
C 51 2/3	**P132**	252.5	38	41.3	10	300	265	230	16	14	5	428.5	54
C 51 2/3	**P160**	—	42	45.3	12	350	300	250	23	18	5.5	479	58
C 51 2/3	**P180**	—	48	51.8	14	350	300	250	23	18	5.5	479	58
C 51 4	**P63**	—	11	12.8	4	140	115	95	—	M8x19	4	434	47
C 51 4	**P71**	—	14	16.3	5	160	130	110	—	M8x16	4.5	434	47
C 51 4	**P80**	—	19	21.8	6	200	165	130	—	M10x14.5	4	453.5	49
C 51 4	**P90**	—	24	27.3	8	200	165	130	—	M10x14.5	4	463.5	49
C 51 4	**P100**	—	28	31.3	8	250	215	180	—	M12x16	4.5	463.5	53
C 51 4	**P112**	—	28	31.3	8	250	215	180	—	M12x16	4.5	463.5	53

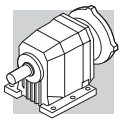

C 51...SK / SC

P

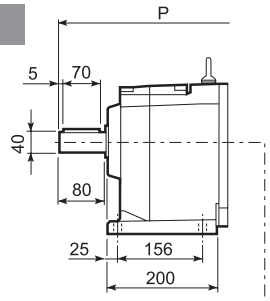

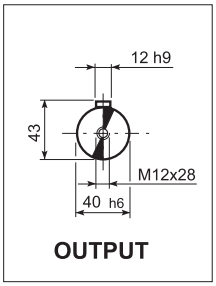

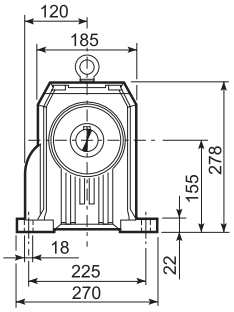

U

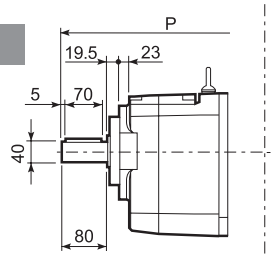

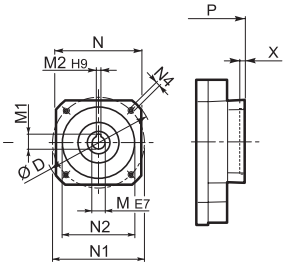

SK...

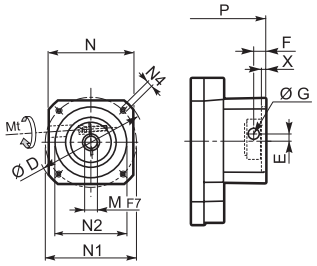

SC...

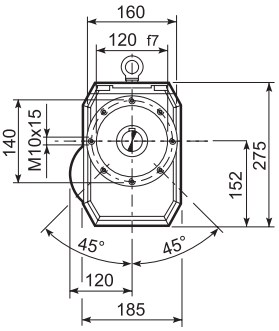

UF

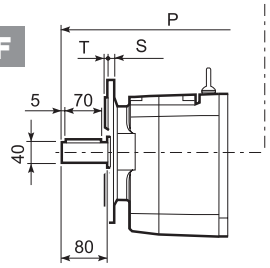

C 51_U						
	D1	D2	D3	G	T	S
FA	180	215	250	14	4	13
FB	230	265	300	14	4	16

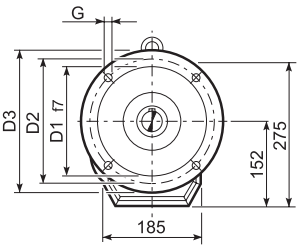

		D	M	M1	M2	N	N1	N2	N4	X	P 2/3x	P 4x	Kg
C 51 2/3	SK80B	120	14	16.3	5	96	100	80	M6x12	4	382	—	46/46
C 51 2/3/4	SK80C	120	19	21.8	6	96	100	80	M6x12	4	382	453.5	47/47/49
C 51 2/3/4	SK95A	130	14	16.3	5	102	115	95	M8x12	4	382	453.5	46/46/48
C 51 2/3/4	SK95B	130	19	21.8	6	102	115	95	M8x12	4	382	453.5	47/47/49
C 51 2/3/4	SK95C	130	24	27.3	8	102	115	95	M8x12	4	382	453.5	47/47/49
C 51 2/3/4	SK110A	150	19	21.8	6	120	130	110	M8x12	5	382	453.5	47/47/51
C 51 2/3/4	SK110B	150	24	27.3	8	120	130	110	M8x12	5	382	453.5	47/47/51
C 51 2/3/4	SK130A	188	24	27.3	8	142	165	130	M10x20	5	382	453.5	49/49/52
C 51 2/3	SK130B	189	32	35.3	10	160	165	130	M10x20	5	428.5	—	55/55
C 51 2/3	SK180A	240	32	35.3	10	192	215	180	M12x19	5	428.5	—	55/55
C 51 2/3	SK180B	240	38	41.3	10	192	215	180	M12x19	5	428.5	—	55/55

		Mt [Nm]	D	E	F	G	M	N	N1	N2	N4	X	P 2/3x	P 4x	Kg
C 51 2/3	SC80B	M6 15	120	15.5	14.5	17.75	14	96	100	80	M6x12	4	405.5	—	47/47
C 51 2/3/4	SC80C	M6 15	120	15.5	14.5	17.75	19	96	100	80	M6x12	4	405.5	477	48/48/50
C 51 2/3/4	SC95A	M6 15	130	16.5	15	17.75	14	102	115	95	M8x16	4	405.5	477	47/47/49
C 51 2/3/4	SC95B	M6 15	130	16.5	15	17.75	19	102	115	95	M8x16	4	405.5	477	48/48/50
C 51 2/3/4	SC95C	M6 15	130	16.5	15	17.75	24	102	115	95	M8x16	4	405.5	477	48/48/50
C 51 2/3/4	SC110A	M6 15	150	16.5	16	17.75	19	120	130	110	M8x16	5	405.5	477	49/49/52
C 51 2/3/4	SC110B	M6 15	150	16.5	16	17.75	24	120	130	110	M8x16	5	405.5	477	49/49/52
C 51 2/3/4	SC130A	M6 15	188	19	16	17.75	24	142	165	130	M10x20	5	405.5	477	50/50/53
C 51 2/3	SC130B	M8 36	189	20	17	17.75	32	160	165	130	M10x20	5	451.5	—	54/54
C 51 2/3	SC180A	M8 36	240	20	17.5	17.75	32	192	215	180	M12x24	5	455.5	—	54/54
C 51 2/3	SC180B	M8 36	240	20	17.5	17.75	38	192	215	180	M12x24	5	455.5	—	54/54

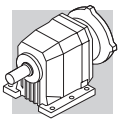

C 51...HS

P

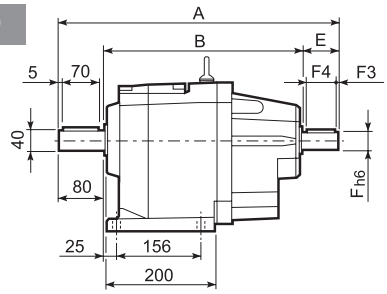

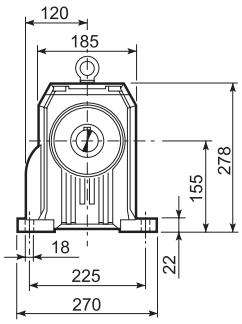

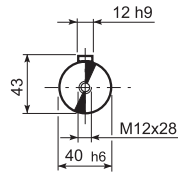

OUTPUT

U

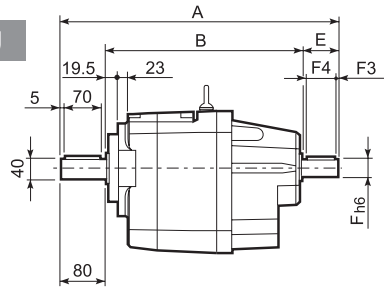

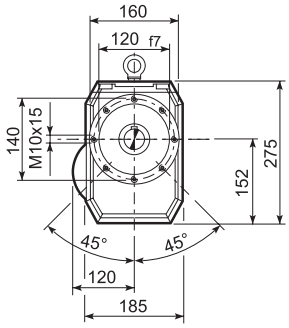

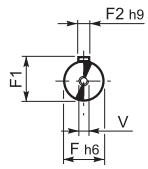

INPUT

UF

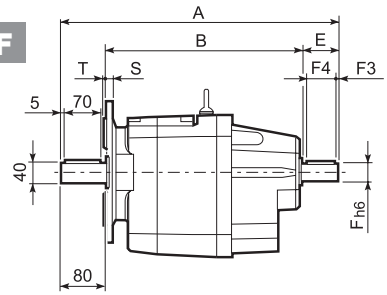

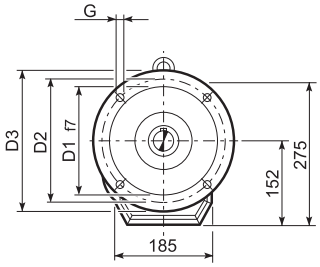

C 51_U						
	D1	D2	D3	G	T	S
FA	180	215	250	14	4	13
FB	230	265	300	14	4	16

		A	B	E	F	F1	F2	F3	F4	V	Kg
C 51 2	HS	451.5	322	50	24	24	8	2.5	45	M8x19	45
C 51 3		451.5	322	50	24	24	8	2.5	45	M8x19	45
C 51 4		484	364	40	19	21.5	6	2.5	35	M6x16	48

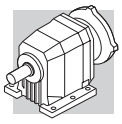

C 61...M/ME/MX

P

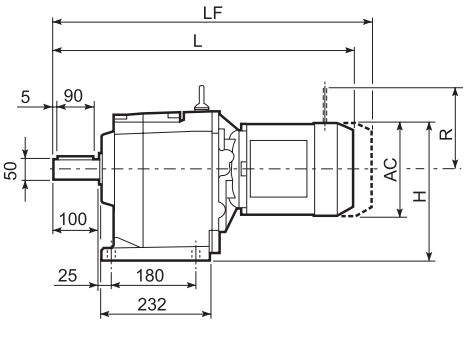

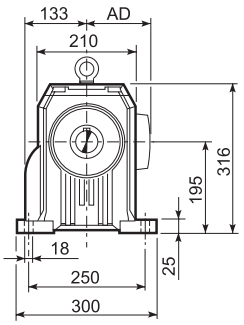

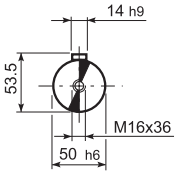

OUTPUT

U

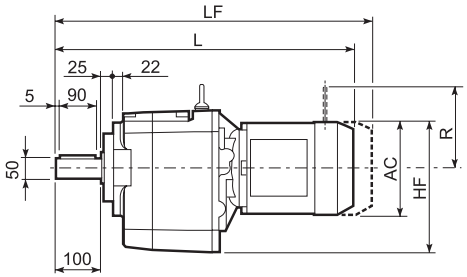

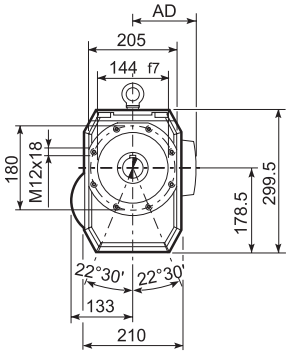

UF

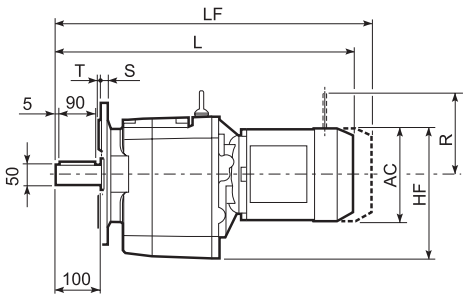

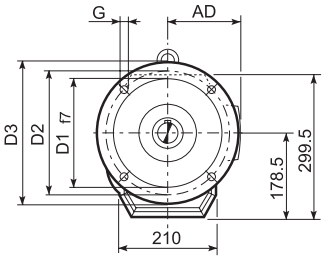

C 61_U						
	D1	D2	D3	G	T	S
FA	230	265	300	14	4	16
FB	250	300	350	18	5	18

										M...FD M...FA		M...FD		M...FA	
				AC	H	HF	L	AD	Kg	LF	Kg	R	AD	R	AD
C 61 2/3	S2	ME2S		156	273	256.5	598.5	119	61	—	—	—	—	—	—
C 61 2/3	S2	MX2S		156	273	256.5	642.5	119	66.1	—	—	—	—	—	—
C 61 2/3	S3	ME3S		195	292.5	276	642.5	142	67.5	—	—	—	—	—	—
C 61 2/3	S3	MX3S		195	292.5	276	674.5	142	70.5	—	—	—	—	—	—
C 61 2/3	S3	ME3L		195	292.5	276	674.5	142	74	—	—	—	—	—	—
C 61 2/3	S3	MX3L		195	292.5	276	718.5	142	80	—	—	—	—	—	—
C 61 2/3	S4	ME4	MX4	258	324	307.5	782.5	193	108	—	—	—	—	—	—
C 61 2/3	S4	ME4LB	MX4LA	258	324	307.5	817.5	193	116	—	—	—	—	—	—
C 61 2/3	S5	ME5S	MX5S	310	350	333.5	869	245	136	—	—	—	—	—	—
C 61 2/3	S5	ME5L	MX5L	310	350	333.5	913	245	152	—	—	—	—	—	—
C 61 4	S1	M1		138	264	247.5	641	108	71	702	74	103	135	124	108
C 61 4	S2	ME2S		156	273	256.5	669	119	75	—	—	—	—	—	—
C 61 4	S2	MX2S		156	273	256.5	713	119	80.1	—	—	—	—	—	—
C 61 4	S3	ME3S		195	292.5	276	713	142	80.5	—	—	—	—	—	—
C 61 4	S3	MX3S		195	292.5	276	745	142	83.5	—	—	—	—	—	—
C 61 4	S3	ME3L		195	292.5	276	745	142	87	—	—	—	—	—	—
C 61 4	S3	MX3L		195	292.5	276	789	142	93	—	—	—	—	—	—

Bonfiglioli Riduttori

C 61...P(IEC)

P

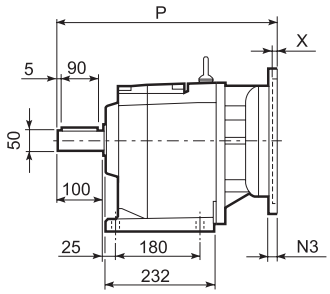

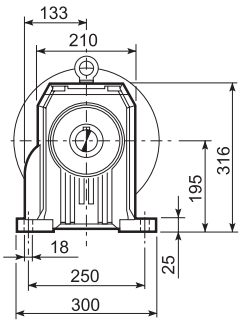

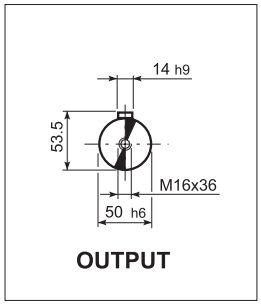

U

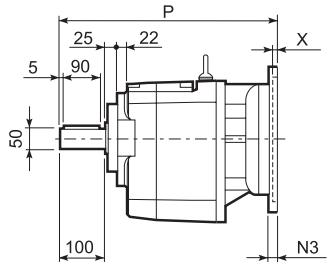

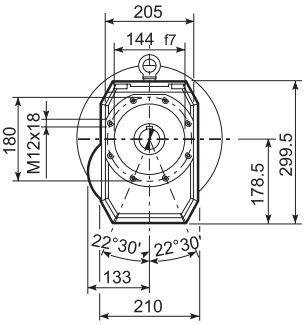

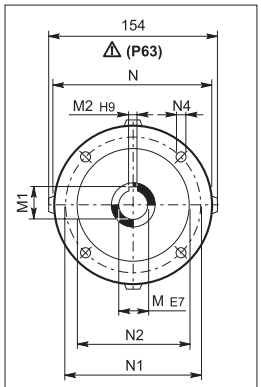

UF

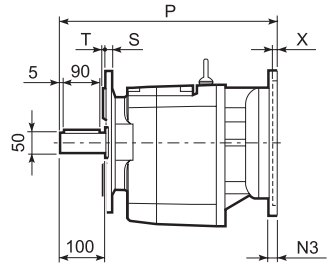

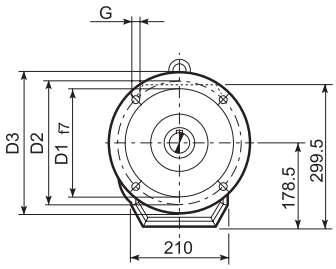

C 61_U

	D1	D2	D3	G	T	S
FA	230	265	300	14	4	16
FB	250	300	350	18	5	18

		M	M1	M2	N	N1	N2	N3	N4	X	P	Kg
C 61 2/3	**P63**	11	12.8	4	140	115	95	—	M8x19	4	415.5	55
C 61 2/3	**P71**	14	16.3	5	160	130	110	—	M8x16	4.5	415.5	57
C 61 2/3	**P80**	19	21.8	6	200	165	130	—	M10x14.5	4	435	61
C 61 2/3	**P90**	24	27.3	8	200	165	130	—	M10x14.5	4	435	61
C 61 2/3	**P100**	28	31.3	8	250	215	180	—	M12x16	4.5	444	65
C 61 2/3	**P112**	28	31.3	8	250	215	180	—	M12x16	4.5	444	65
C 61 2/3	**P132**	38	41.3	10	300	265	230	16	14	5	481.5	68
C 61 2/3	**P160**	42	45.3	12	350	300	250	23	18	5.5	532	73
C 61 2/3	**P180**	48	51.8	14	350	300	250	23	18	5.5	532	73
C 61 4	**P63**	11	12.8	4	140	115	95	—	M8x19	4	486	61
C 61 4	**P71**	14	16.3	5	160	130	110	—	M8x16	4.5	489	63
C 61 4	**P80**	19	21.8	6	200	165	130	—	M10x14.5	4	505.5	67
C 61 4	**P90**	24	27.3	8	200	165	130	—	M10x14.5	4	505.5	67
C 61 4	**P100**	28	31.3	8	250	215	180	—	M12x16	4.5	515.5	71
C 61 4	**P112**	28	31.3	8	250	215	180	—	M12x16	4.5	515.5	71

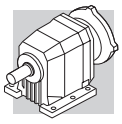

C 61...SK / SC

P

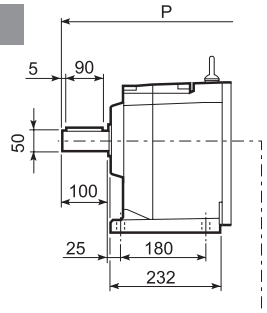

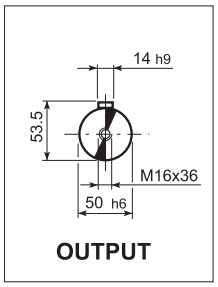

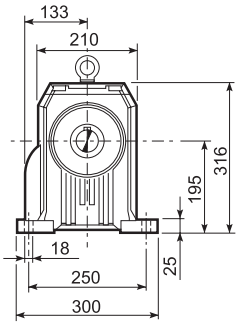

U

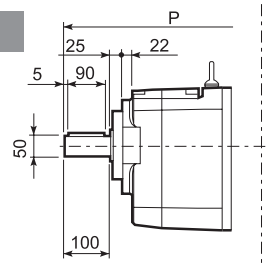

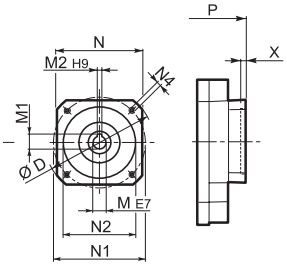

SK...

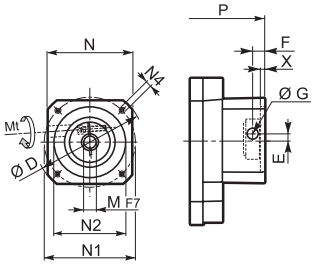

SC...

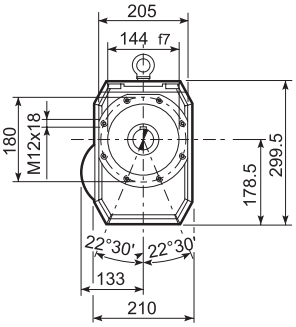

UF

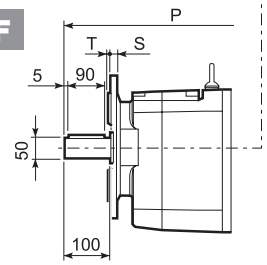

C 61_U						
	D1	D2	D3	G	T	S
FA	230	265	300	14	4	16
FB	250	300	350	18	5	18

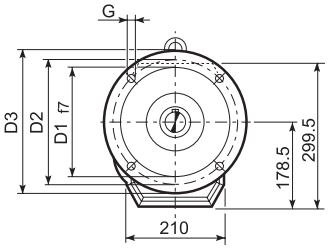

		D	M	M1	M2	N	N1	N2	N4	X	P 2/3x	P 4x	Kg
C 61 4	SK80B	120	14	16.3	5	96	100	80	M6x12	4	—	505.5	62
C 61 2/3/4	SK80C	120	19	21.8	6	96	100	80	M6x12	4	435	505.5	63/63/69
C 61 2/3/4	SK95A	130	14	16.3	5	102	115	95	M8x12	4	435	505.5	60/60/67
C 61 2/3/4	SK95B	130	19	21.8	6	102	115	95	M8x12	4	435	505.5	63/63/69
C 61 2/3/4	SK95C	130	24	27.3	8	102	115	95	M8x12	4	435	505.5	63/63/69
C 61 2/3/4	SK110A	140	19	21.8	6	120	130	110	M8x12	5	435	505.5	63/63/69
C 61 2/3/4	SK110B	140	24	27.3	8	120	130	110	M8x12	5	435	505.5	63/63/69
C 61 2/3/4	SK130A	188	24	27.3	8	142	165	130	M10x20	5	435	505.5	67/67/80
C 61 2/3	SK130B	189	32	35.3	10	160	165	130	M10x20	5	481.5	—	72/72
C 61 2/3	SK180A	240	32	35.3	10	192	215	180	M12x19	5	481.5	—	72/72
C 61 2/3	SK180B	240	38	41.3	10	192	215	180	M12x19	5	481.5	—	66/66

			Mt [Nm]	D	E	F	G	M	N	N1	N2	N4	X	P 2/3x	P 4x	Kg
C 61 4	SC80B	M6	15	120	15.5	14.5	17.75	14	96	100	80	M6x12	4	—	529	63
C 61 2/3/4	SC80C	M6	15	120	15.5	14.5	17.75	19	96	100	80	M6x12	4	458.5	529	64/64/70
C 61 2/3/4	SC95A	M6	15	130	16.5	15	17.75	14	102	115	95	M8x16	4	458.5	529	61/61/68
C 61 2/3/4	SC95B	M6	15	130	16.5	15	17.75	19	102	115	95	M8x16	4	458.5	529	64/64/70
C 61 2/3/4	SC95C	M6	15	130	16.5	15	17.75	24	102	115	95	M8x16	4	458.5	529	64/64/70
C 61 2/3/4	SC110A	M6	15	140	16.5	16	17.75	19	120	130	110	M8x16	5	458.5	529	65/65/70
C 61 2/3/4	SC110B	M6	15	140	16.5	16	17.75	24	120	130	110	M8x16	5	458.5	529	65/65/70
C 61 2/3/4	SC130A	M6	15	188	19	16	17.75	24	142	165	130	M10x20	5	458.5	529	66/66/81
C 61 2/3	SC130B	M8	36	189	20	17	17.75	32	160	165	130	M10x20	5	504.5	—	75/75
C 61 2/3	SC180A	M8	36	240	20	17.5	17.75	32	192	215	180	M12x24	5	508.5	—	75/75
C 61 2/3	SC180B	M8	36	240	20	17.5	17.75	38	192	215	180	M12x24	5	508.5	—	69/69

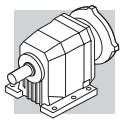

C 61...HS

P

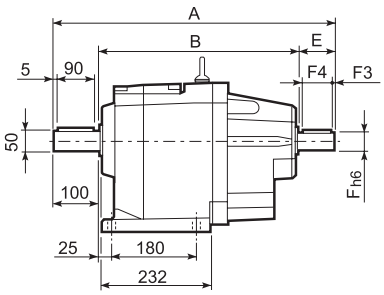

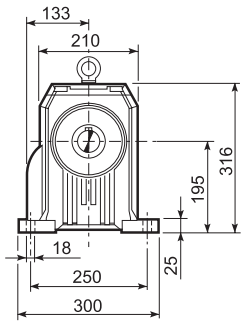

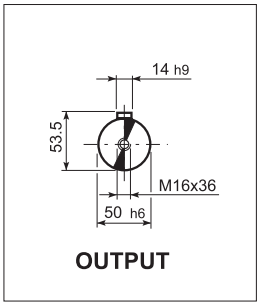

U

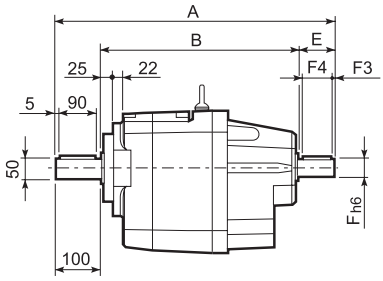

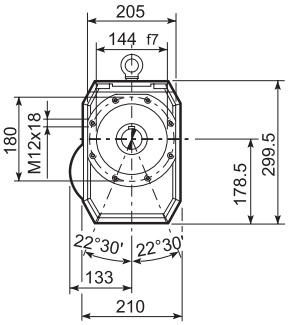

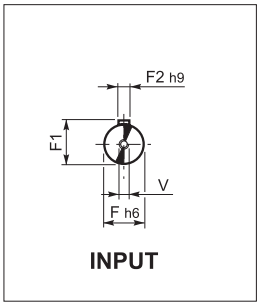

UF

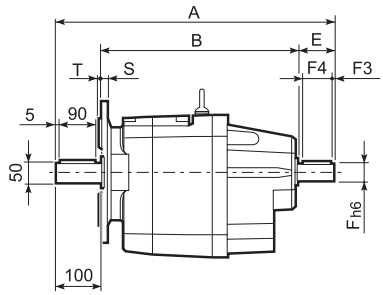

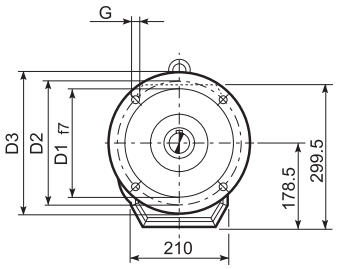

C 61_U

	D1	D2	D3	G	T	S
FA	230	265	300	14	4	16
FB	250	300	350	18	5	18

		A	B	E	F	F1	F2	F3	F4	V	Kg
C 61 2	**HS**	532	372	60	28	31	8	5	50	M10x22	66
C 61 3		532	372	60	28	31	8	5	50	M10x22	66
C 61 4		575	425	50	24	27	8	2.5	45	M8x19	72

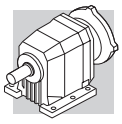

C 70...M/ME/MX

P

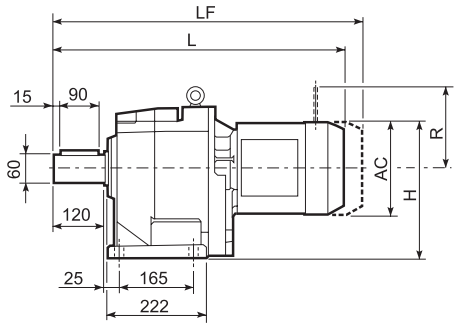

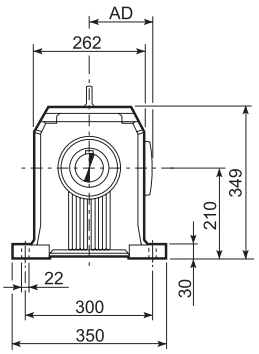

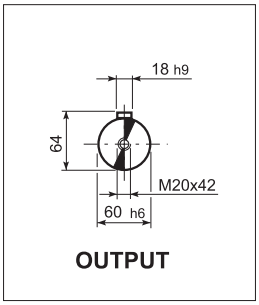

F

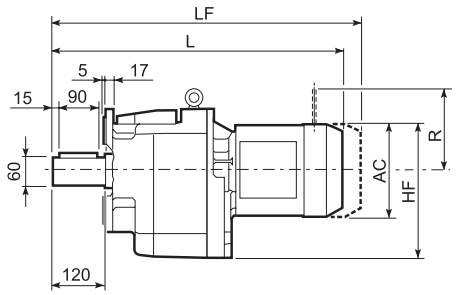

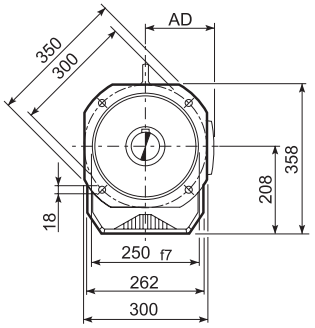

										M...FD M...FA		M...FD		M...FA	
				AC	H	HF	L	AD	Kg	LF	Kg	R	AD	R	AD
C 70 2/3	**S2**	**ME2S**		156	288	286	636.5	119	88	—	—	—	—	—	—
C 70 2/3	**S2**	**MX2S**		156	288	286	680.5	119	93.1	—	—	—	—	—	—
C 70 2/3	**S3**	**ME3S**		195	307.5	305.5	680.5	142	94.5	—	—	—	—	—	—
C 70 2/3	**S3**	**MX3S**		195	307.5	305.5	680.5	142	97.5	—	—	—	—	—	—
C 70 2/3	**S3**	**ME3L**		195	307.5	305.5	712.5	142	101	—	—	—	—	—	—
C 70 2/3	**S3**	**MX3L**		195	307.5	305.5	756.5	142	107	—	—	—	—	—	—
C 70 2/3	**S4**	**ME4**	**MX4**	258	339	337	820.5	193	135	—	—	—	—	—	—
C 70 2/3	**S4**	**ME4LB**	**MX4LA**	258	339	337	855.5	193	143	—	—	—	—	—	—
C 70 2/3	**S5**	**ME5S**	**MX5S**	310	365	363	907	245	163	—	—	—	—	—	—
C 70 2/3	**S5**	**ME5L**	**MX5L**	310	365	363	951	245	179	—	—	—	—	—	—
C 70 4	**S1**	**M1**		138	279	277	659.5	108	88	720.5	91	103	135	124	108
C 70 4	**S2**	**ME2S**		156	288	286	687.5	119	92	—	—	—	—	—	—
C 70 4	**S2**	**MX2S**		156	288	286	731.5	119	97.1	—	—	—	—	—	—
C 70 4	**S3**	**ME3S**		195	307.5	305.5	731.5	142	98.5	—	—	—	—	—	—
C 70 4	**S3**	**MX3S**		195	307.5	305.5	763.5	142	101.5	—	—	—	—	—	—
C 70 4	**S3**	**ME3L**		195	307.5	305.5	763.5	142	104	—	—	—	—	—	—
C 70 4	**S3**	**MX3L**		195	307.5	305.5	807.5	142	110	—	—	—	—	—	—
C 70 4	**S4**	**ME4**	**MX4**	258	339	337	871.5	193	138	—	—	—	—	—	—
C 70 4	**S4**	**ME4LB**	**MX4LA**	258	339	337	906.5	193	146	—	—	—	—	—	—

C 70...P(IEC)

P

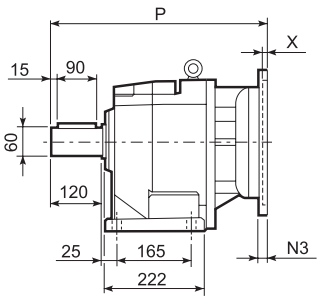

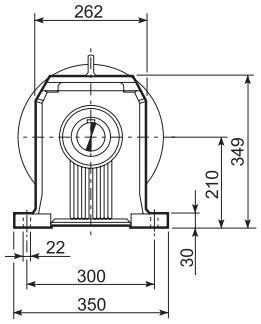

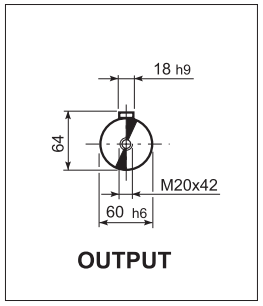

F

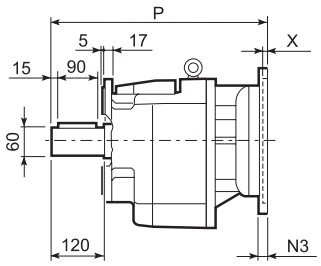

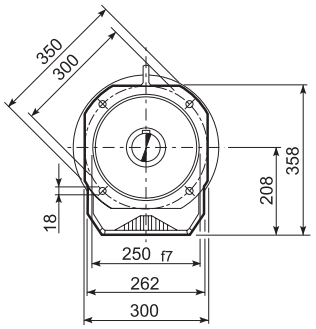

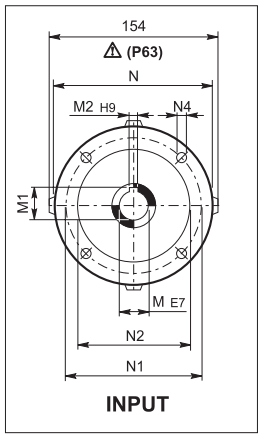

		M	M1	M2	N	N1	N2	N3	N4	X	P	Kg
C 70 2/3	**P80**	19	21.8	6	200	165	130	—	M10x14.5	4	473	88
C 70 2/3	**P90**	24	27.3	8	200	165	130	—	M10x14.5	4	473	88
C 70 2/3	**P100**	28	31.3	8	250	215	180	—	M12x16	4.5	483	92
C 70 2/3	**P112**	28	31.3	8	250	215	180	—	M12x16	4.5	483	92
C 70 2/3	**P132**	38	41.3	10	300	265	230	16	14	5	519.5	95
C 70 2/3	**P160**	42	45.3	12	350	300	250	23	18	6	575	107
C 70 2/3	**P180**	48	51.8	14	350	300	250	23	18	6	575	107
C 70 2	**P200**	55	59.3	16	400	350	300	—	M16x25	7	600	129
C 70 4	**P63**	11	12.8	4	140	115	95	—	M8x19	4	504.5	91
C 70 4	**P71**	14	16.3	5	160	130	110	—	M8x16	4.5	504.5	91
C 70 4	**P80**	19	21.8	6	200	165	130	—	M10x14.5	4	524	92
C 70 4	**P90**	24	27.3	8	200	165	130	—	M10x14.5	4	524	92
C 70 4	**P100**	28	31.3	8	250	215	180	—	M12x16	4.5	534	96
C 70 4	**P112**	28	31.3	8	250	215	180	—	M12x16	4.5	534	96
C 70 4	**P132**	38	41.3	10	300	265	230	16	14	5	570.5	98

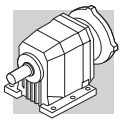

C 70...HS

P

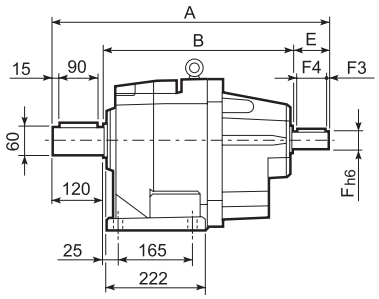

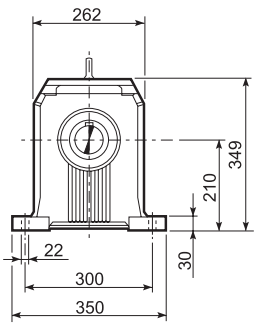

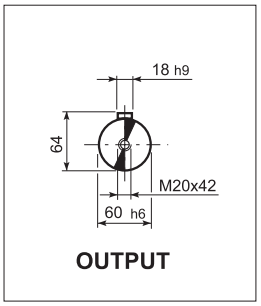

F

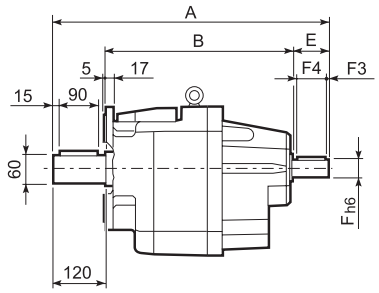

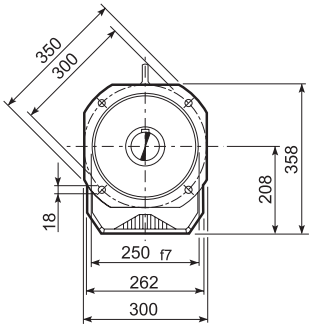

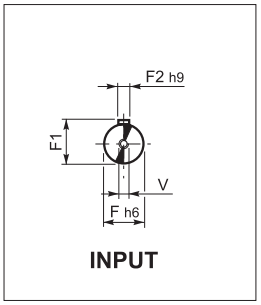

		A	B	E	F	F1	F2	F3	F4	V	Kg
C 70 2		657.5	427.5	110	42	45	12	10	90	M12x28	108
C 70 3	**HS**	657.5	427.5	110	42	45	12	10	90	M12x28	108
C 70 4		593.5	423.5	50	24	27	8	2.5	45	M8x19	94

C 80...M/ME/MX

P

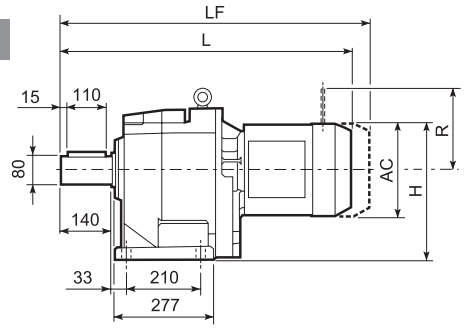

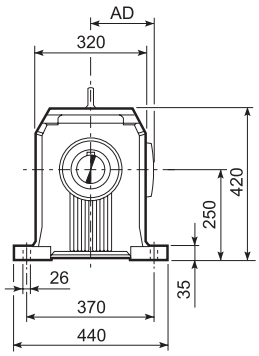

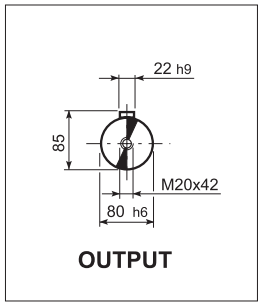

F

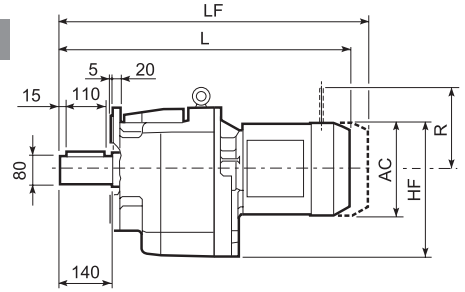

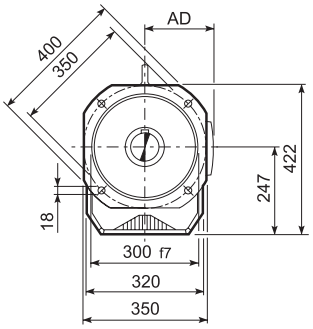

										M...FD M...FA		M...FD		M...FA	
				AC	H	HF	L	AD	Kg	LF	Kg	R	AD	R	AD
C 80 2/3	**S3**	**ME3S**		195	347.5	344.5	742.5	142	140.5	—	—	—	—	—	—
C 80 2/3	**S3**	**MX3S**		195	347.5	344.5	774.5	142	143.5	—	—	—	—	—	—
C 80 2/3	**S3**	**ME3L**		195	347.5	344.5	774.5	142	146	—	—	—	—	—	—
C 80 2/3	**S3**	**MX3L**		195	347.5	344.5	818.5	142	152	—	—	—	—	—	—
C 80 2/3	**S4**	**ME4**	**MX4**	258	379	376	882.5	193	180	—	—	—	—	—	—
C 80 2/3	**S4**	**ME4LB**	**MX4LA**	258	379	376	917.5	193	188	—	—	—	—	—	—
C 80 2/3	**S5**	**ME5S**	**MX5S**	310	405	402	969	245	208	—	—	—	—	—	—
C 80 2/3	**S5**	**ME5L**	**MX5L**	310	405	402	1013	245	224	—	—	—	—	—	—
C 80 4	**S1**	**M1**		138	319	316	733.5	108	133	794.5	136	103	135	124	108
C 80 4	**S2**	**ME2S**		156	328	325	761.5	119	137	—	—	—	—	—	—
C 80 4	**S2**	**MX2S**		156	328	325	805.5	119	142.1	—	—	—	—	—	—
C 80 4	**S3**	**ME3S**		195	347.5	344.5	805.5	142	143.5	—	—	—	—	—	—
C 80 4	**S3**	**MX3S**		195	347.5	344.5	837.5	142	146.5	—	—	—	—	—	—
C 80 4	**S3**	**ME3L**		195	347.5	344.5	837.5	142	149	—	—	—	—	—	—
C 80 4	**S3**	**MX3L**		195	347.5	344.5	881.5	142	155	—	—	—	—	—	—
C 80 4	**S4**	**ME4**	**MX4**	258	379	376	945.5	193	183	—	—	—	—	—	—
C 80 4	**S4**	**ME4LB**	**MX4LA**	258	379	376	980.5	193	191	—	—	—	—	—	—

C 80...P(IEC)

P

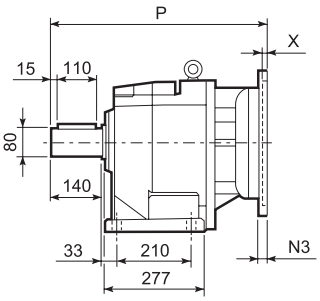

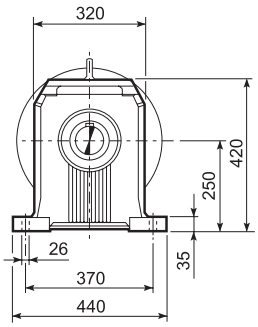

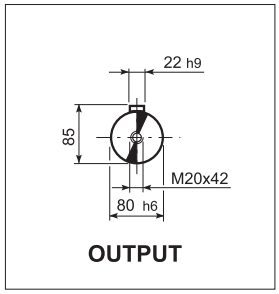

OUTPUT

F

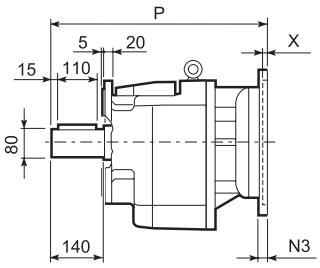

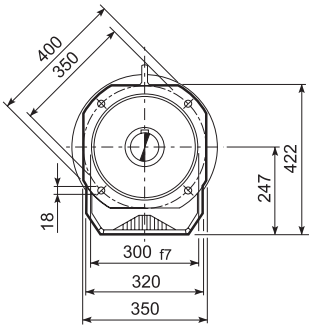

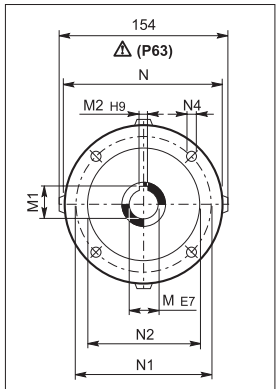

INPUT
P63...P200

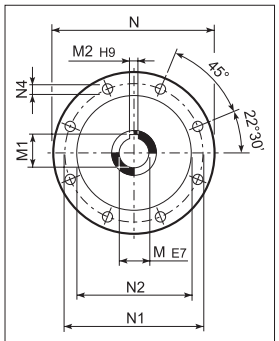

INPUT
P225

		M	M1	M2	N	N1	N2	N3	N4	X	P	Kg
C 80 2/3	**P80**	19	21.8	6	200	165	130	—	M10x14.5	4	533	135
C 80 2/3	**P90**	24	27.3	8	200	165	130	—	M10x14.5	4	533	135
C 80 2/3	**P100**	28	31.3	8	250	215	180	—	M12x16	4.5	543	139
C 80 2/3	**P112**	28	31.3	8	250	215	180	—	M12x16	4.5	543	139
C 80 2/3	**P132**	38	41.3	10	300	265	230	16	14	5	579.5	141
C 80 2/3	**P160**	42	45.3	12	350	300	250	23	18	6	635	154
C 80 2/3	**P180**	48	51.8	14	350	300	250	23	18	6	635	154
C 80 2	**P200**	55	59.3	16	400	350	300	—	M16x25	7	660	176
C 80 2	**P225**	60	64.4	18	450	400	350	25	18	6	705.5	178
C 80 4	**P63**	11	12.8	4	140	115	95	—	M8x19	4	576.5	138
C 80 4	**P71**	14	16.3	5	160	130	110	—	M8x16	4.5	576.5	138
C 80 4	**P80**	19	21.8	6	200	165	130	—	M10x14.5	4	596	140
C 80 4	**P90**	24	27.3	8	200	165	130	—	M10x14.5	4	596	140
C 80 4	**P100**	28	31.3	8	250	215	180	—	M12x16	4.5	606	144
C 80 4	**P112**	28	31.3	8	250	215	180	—	M12x16	4.5	606	144
C 80 4	**P132**	38	41.3	10	300	265	230	16	M12x16	5	642.5	146

Bonfiglioli Riduttori

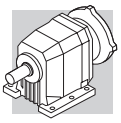

C 80...HS

P

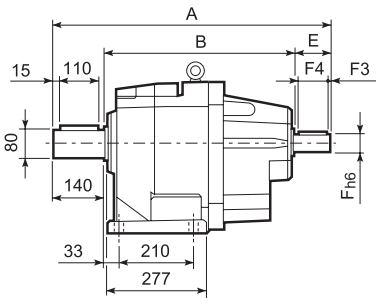

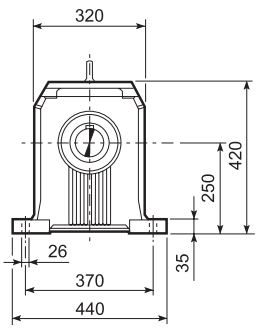

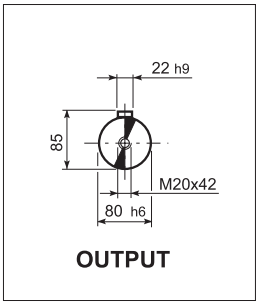

F

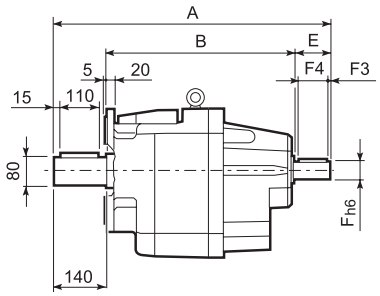

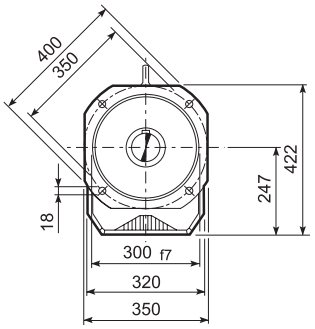

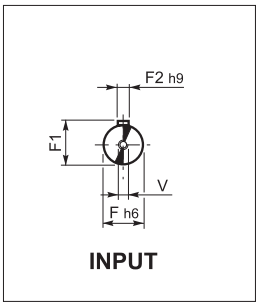

		A	B	E	F	F1	F2	F3	F4	V	Kg
C 80 2		718.5	468.5	110	42	45	12	10	90	M12x28	154
C 80 3	**HS**	718.5	468.5	110	42	45	12	10	90	M12x28	154
C 80 4		666.5	476.5	50	24	27	8	2.5	45	M8x19	141

C 90...M/ME/MX

P

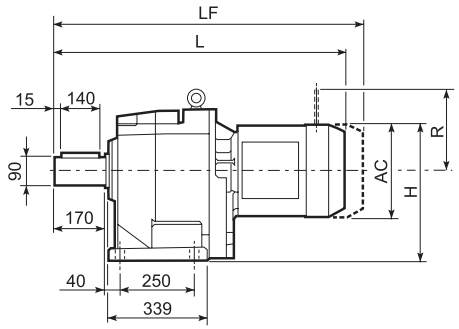

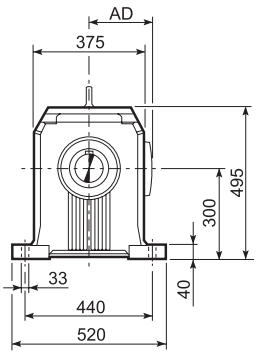

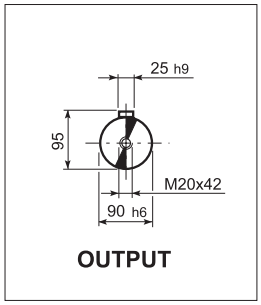

F

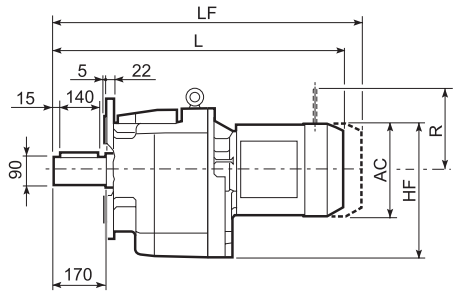

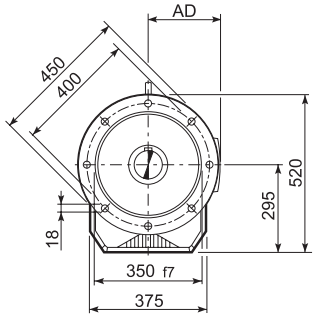

										M...FD M...FA		M...FD		M...FA	
				AC	H	HF	L	AD	Kg	LF	Kg	R	AD	R	AD
C 90 2/3	**S3**	**ME3S**		195	397.5	392.5	852	142	229.5	—	—	—	—	—	—
C 90 2/3	**S3**	**MX3S**		195	397.5	392.5	884	142	232.5	—	—	—	—	—	—
C 90 2/3	**S3**	**ME3L**		195	397.5	392.5	884	142	236	—	—	—	—	—	—
C 90 2/3	**S3**	**MX3L**		195	397.5	392.5	428	142	242	—	—	—	—	—	—
C 90 2/3	**S4**	**ME4**	**MX4**	258	429	424	992	193	270	—	—	—	—	—	—
C 90 2/3	**S4**	**ME4LB**	**MX4LA**	258	429	424	1027	193	278	—	—	—	—	—	—
C 90 2/3	**S5**	**ME5S**	**MX5S**	310	455	450	1078.5	245	298	—	—	—	—	—	—
C 90 2/3	**S5**	**ME5L**	**MX5L**	310	455	450	1122.5	245	314	—	—	—	—	—	—
C 90 4	**S1**	**M1**		138	369	364	862	108	226	923	228	103	135	124	108
C 90 4	**S2**	**M2S**		156	378	373	891	119	234	962	238	129	146	134	119
C 90 4	**S2**	**ME2S**		156	378	373	891	119	234	—	—	—	—	—	—
C 90 4	**S2**	**MX2S**		156	378	373	935	119	239.1	—	—	—	—	—	—
C 90 4	**S3**	**ME3S**		195	397.5	392.5	935	142	240.5	—	—	—	—	—	—
C 90 4	**S3**	**MX3S**		195	397.5	392.5	967	142	243.5	—	—	—	—	—	—
C 90 4	**S3**	**ME3L**		195	397.5	392.5	967	142	246	—	—	—	—	—	—
C 90 4	**S3**	**MX3L**		195	397.5	392.5	1011	142	252	—	—	—	—	—	—
C 90 4	**S4**	**ME4**	**MX4**	258	429	424	1075	193	280	—	—	—	—	—	—
C 90 4	**S4**	**ME4LB**	**MX4LA**	258	429	424	1126.5	193	288	—	—	—	—	—	—

C 90...P(IEC)

P

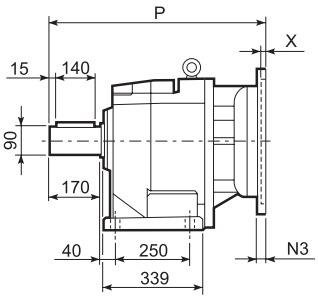

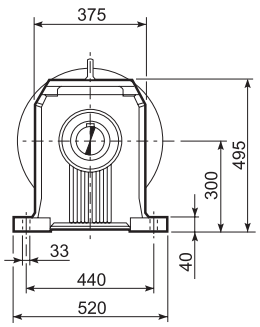

F

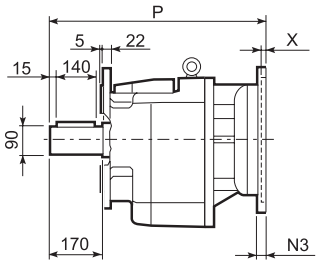

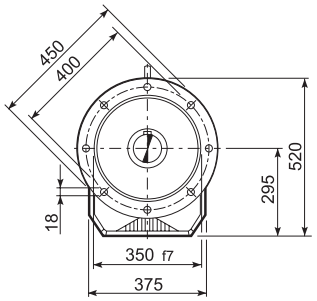

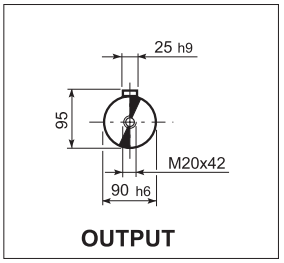

OUTPUT

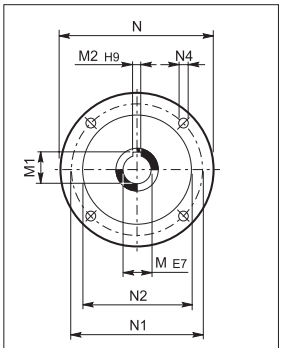

INPUT
P71...P200

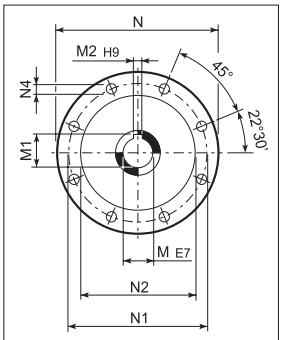

INPUT
P225...P250

		M	M1	M2	N	N1	N2	N3	N4	X	P	Kg
C 90 2/3	**P80**	19	21.8	6	200	165	130	—	M10x14.5	4	644.5	229
C 90 2/3	**P90**	24	27.3	8	200	165	130	—	M10x14.5	4	644.5	229
C 90 2/3	**P100**	28	31.3	8	250	215	180	—	M12x16	4.5	654.5	234
C 90 2/3	**P112**	28	31.3	8	250	215	180	—	M12x16	4.5	654.5	234
C 90 2/3	**P132**	38	41.3	10	300	265	230	16	14	5	691	236
C 90 2/3	**P160**	42	45.3	12	350	300	250	23	18	6	746.5	251
C 90 2/3	**P180**	48	51.8	14	350	300	250	23	18	6	746.5	251
C 90 2/3	**P200**	55	59.3	16	400	350	300	—	M16x25	7	771.5	272
C 90 2/3	**P225**	60	64.4	18	450	400	350	30	18	6	817	273
C 90 2/3	**P250**	65	69.4	18	550	500	450	30	18	6	847	295
C 90 4	**P63**	11	12.8	4	140	115	95	—	M8x19	4	707.5	236
C 90 4	**P71**	14	16.3	5	160	130	110	—	M8x16	4.5	707.5	236
C 90 4	**P80**	19	21.8	6	200	165	130	—	M10x14.5	4	727	238
C 90 4	**P90**	24	27.3	8	200	165	130	—	M10x14.5	4	727	238
C 90 4	**P100**	28	31.3	8	250	215	180	—	M12x16	4.5	737	242
C 90 4	**P112**	28	31.3	8	250	215	180	—	M12x16	4.5	737	242
C 90 4	**P132**	38	41.3	10	300	265	230	16	14	5	773.5	244
C 90 4	**P160**	42	45.3	12	350	300	250	23	18	5.5	824	248
C 90 4	**P180**	48	51.8	14	350	300	250	23	18	5.5	824	248

C 90...HS

P

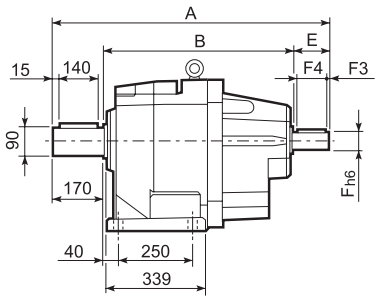

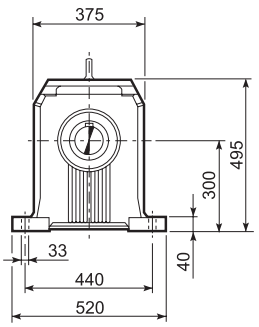

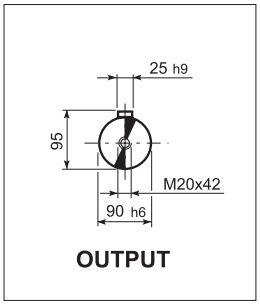

F

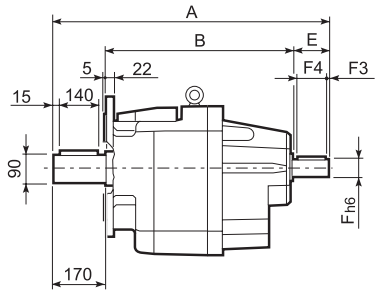

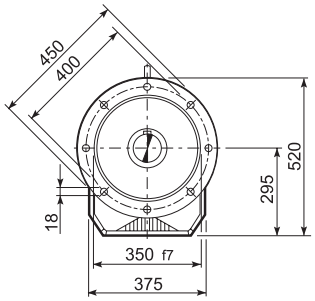

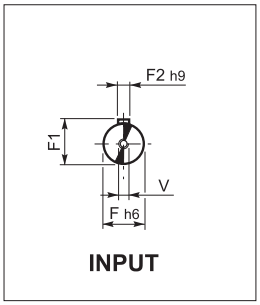

		A	B	E	F	F1	F2	F3	F4	V	Kg
C 90 2		930.5	620.5	140	60	64	18	10	120	M16x36	273
C 90 3	**HS**	930.5	620.5	140	60	64	18	10	120	M16x36	273
C 90 4		797	577	50	24	27	8	2.5	45	M8x19	240

C 100...M/ME/MX

P

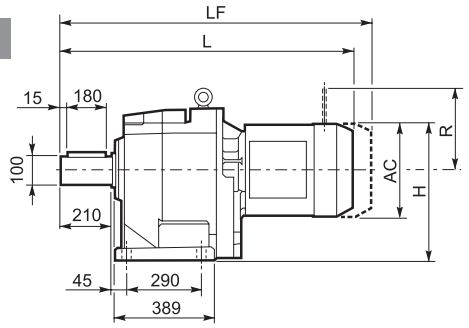

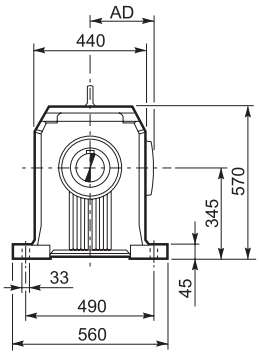

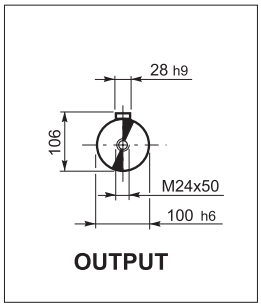

F

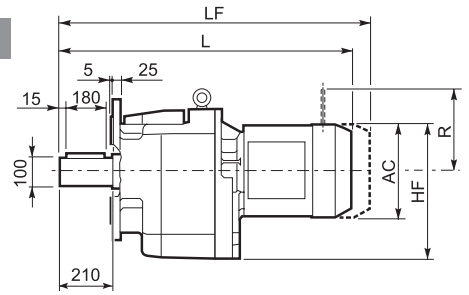

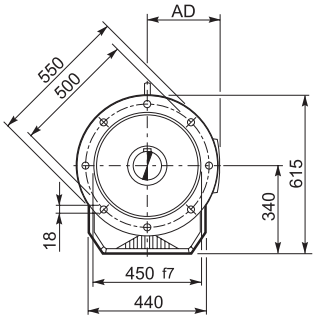

										M...FD M...FA		M...FD		M...FA	
				AC	H	HF	L	AD	Kg	LF	Kg	R	AD	R	AD
C 100 2/3	**S4**	**ME4**	**MX4**	258	474	469	1087	193	392	—	—	—	—	—	—
C 100 2/3	**S4**	**ME4LB**	**MX4LA**	258	474	469	1122	193	400	—	—	—	—	—	—
C 100 2/3	**S5**	**ME5S**	**MX5S**	310	500	495	1173.5	245	420	—	—	—	—	—	—
C 100 2/3	**S5**	**ME5L**	**MX5L**	310	500	495	1217.5	245	436	—	—	—	—	—	—
C 100 4	**S1**	**M1**		138	414	409	956.5	108	346	1027.5	348	103	135	124	108
C 100 4	**S2**	**M2S**		156	423	418	985.5	119	354	1056.5	357	129	146	134	119
C 100 4	**S2**	**ME2S**		156	423	418	985.5	119	354	—	—	—	—	—	—
C 100 4	**S2**	**MX2S**		156	423	418	1029.5	119	359.1	—	—	—	—	—	—
C 100 4	**S3**	**ME3S**		195	442.5	437.5	1029.5	142	359.5	—	—	—	—	—	—
C 100 4	**S3**	**MX3S**		195	442.5	437.5	1061.5	142	362.5	—	—	—	—	—	—
C 100 4	**S3**	**ME3L**		195	442.5	437.5	1061.5	142	366	—	—	—	—	—	—
C 100 4	**S3**	**MX3L**		195	442.5	437.5	1105.5	142	372	—	—	—	—	—	—
C 100 4	**S4**	**ME4**	**MX4**	258	474	469	1169.5	193	400	—	—	—	—	—	—
C 100 4	**S4**	**ME4LB**	**MX4LA**	258	474	469	1204.5	245	408	—	—	—	—	—	—

C 100...P(IEC)

P

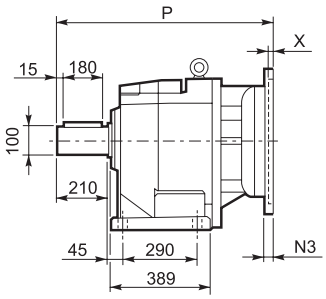

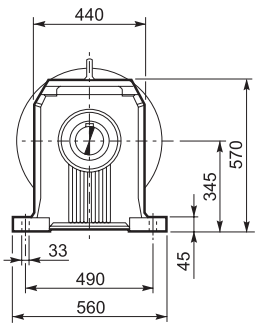

F

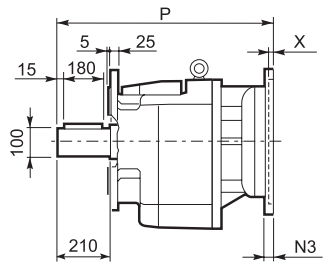

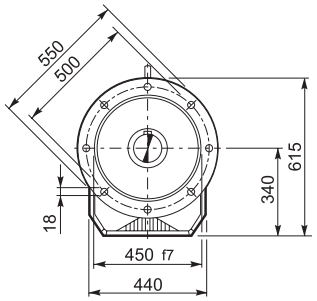

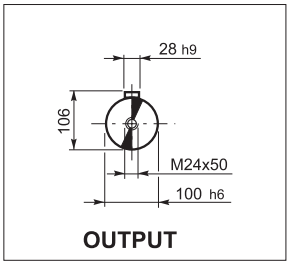

OUTPUT

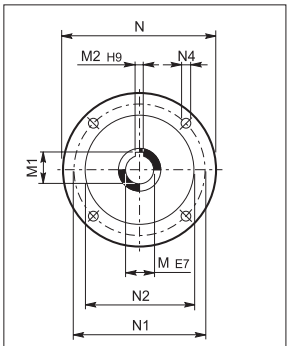

INPUT
P80...P200

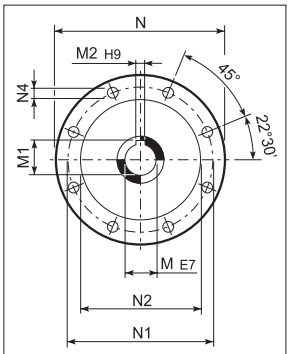

INPUT
P225...P280

		M	M1	M2	N	N1	N2	N3	N4	X	P	kg
C 100 2/3	**P100**	28	31.3	8	250	215	180	—	M12x16	4.5	749.5	364
C 100 2/3	**P112**	28	31.3	8	250	215	180	—	M12x16	4.5	749.5	364
C 100 2/3	**P132**	38	41.3	10	300	265	230	16	14	5	786	367
C 100 2/3	**P160**	42	45.3	12	350	300	250	23	18	6	841.5	382
C 100 2/3	**P180**	48	51.8	14	350	300	250	23	18	6	841.5	382
C 100 2/3	**P200**	55	59.3	16	400	350	300	—	M16x25	7	866.5	403
C 100 2/3	**P225**	60	64.4	18	450	400	350	30	18	7	912	403
C 100 2/3	**P250**	65	69.4	18	550	500	450	30	18	7	942	426
C 100 2/3	**P280**	75	79.9	20	550	500	450	30	18	6	942	426
C 100 4	**P63**	11	12.8	4	140	115	95	—	M8x19	4	803	369
C 100 4	**P71**	14	16.3	5	160	130	110	—	M8x16	4.5	803	369
C 100 4	**P80**	19	21.8	6	200	165	130	—	M10x14.5	4	822.5	371
C 100 4	**P90**	24	27.3	8	200	165	130	—	M10x14.5	4	822.5	371
C 100 4	**P100**	28	31.3	8	250	215	180	—	M12x16	4.5	832.5	375
C 100 4	**P112**	28	31.3	8	250	215	180	—	M12x16	4.5	832.5	375
C 100 4	**P132**	38	41.3	10	300	265	230	16	14	5	869	377
C 100 4	**P160**	42	45.3	12	350	300	250	23	18	5.5	919.5	381
C 100 4	**P180**	48	51.8	14	350	300	250	23	18	5.5	919.5	381

C 100...HS

P

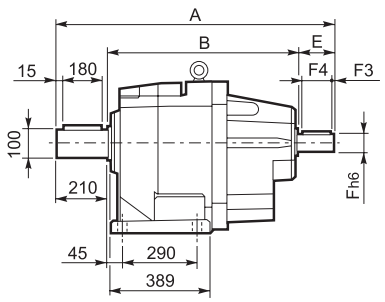

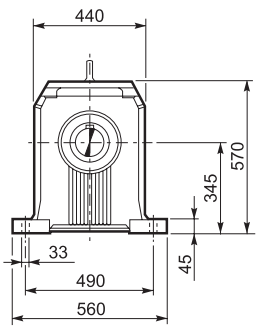

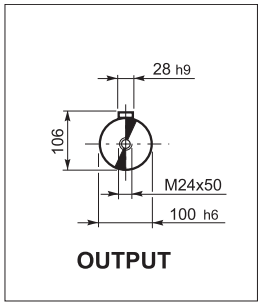

F

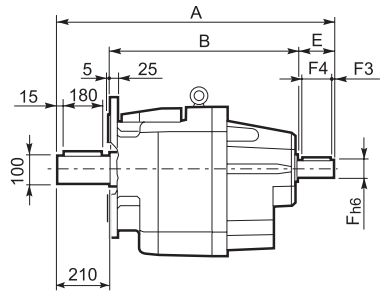

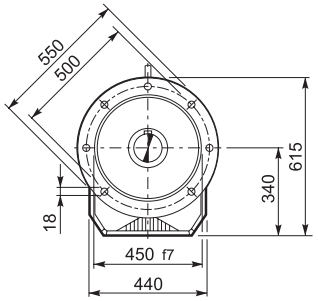

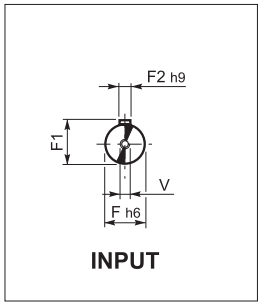

		A	B	E	F	F1	F2	F3	F4	V	Kg
C 100 2		1025.5	676	140	60	64	18	10	120	M16x36	409
C 100 3	**HS**	1025.5	676	140	60	64	18	10	120	M16x36	409
C 100 4		892	632	50	24	27	8	2.5	45	M8x19	372

31 设计特点

主要设计特点如下：

- 模块化
- 结构紧凑
- 安装方式多样
- 效率高
- 低噪音
- 表面渗碳硬化处理齿轮
- 05,10,20,30机座采用铝制箱体,表面不喷漆，更大的机座采用高强度的铸铁箱体
- 输入和输出轴由优质钢制成

(C 26)

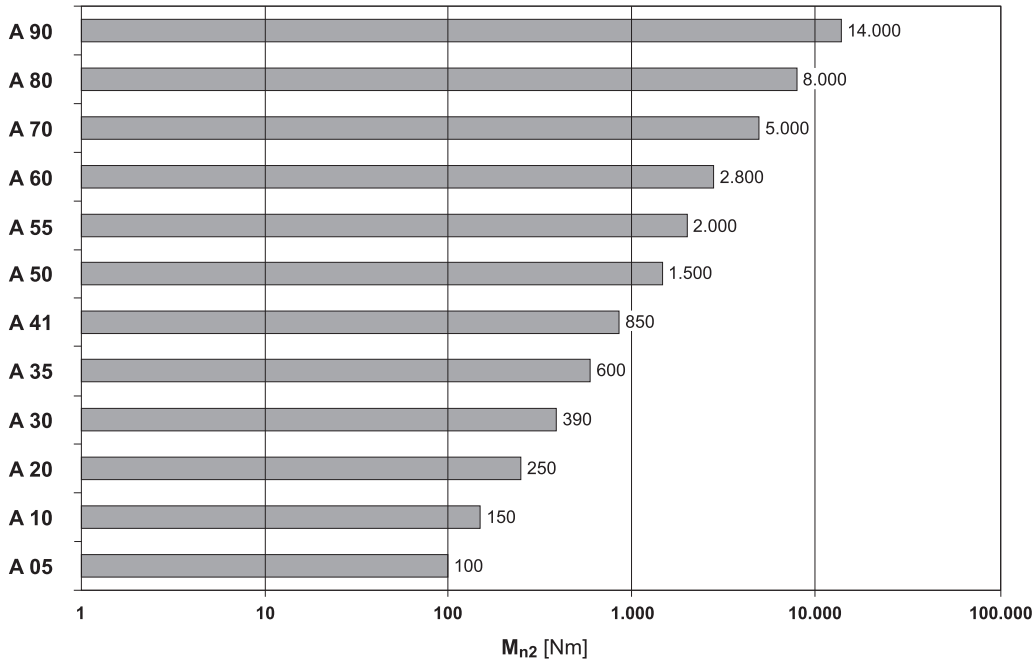

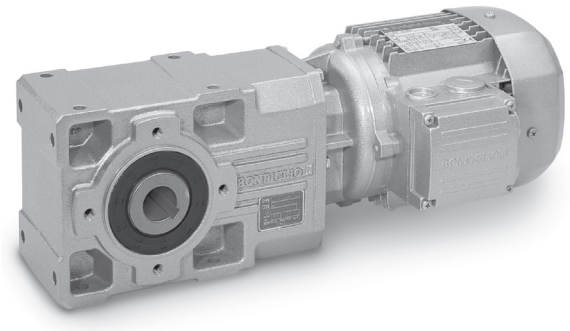

32 输出结构形式

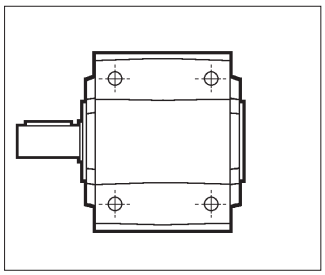

UR

单输出轴

A 05 ... A 90

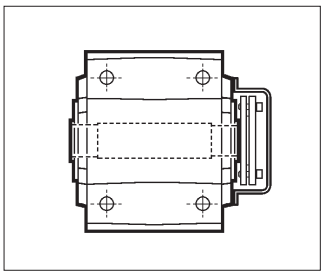

US

带锁紧盘的空心轴输出

A 05 ... A 90

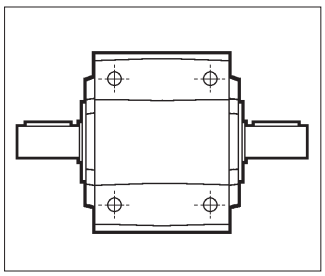

UD

双输出轴

A 05 ... A 90

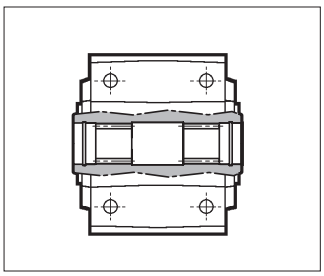

UV

花键空心轴（DIN 5480）输出

A 20 ... A 60

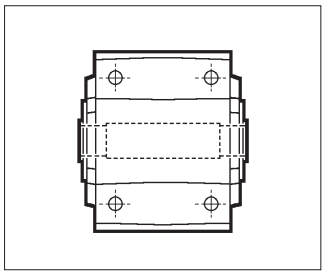

UH

带键槽的空心轴输出

A 05 ... A 90

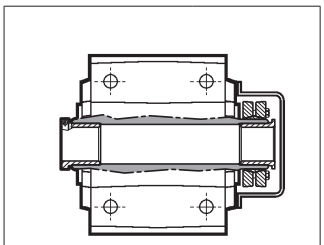

QF

(能快捷组装的结构)

带衬套接头和锁紧盘的空心轴输出

A 10 ... A 60

$M_{n2\ max}$ [Nm]	
A 35 QF35	550
A 55 QF55	1900

输出法兰基本结构

下面简图说明基本输出结构及位置①和②适用的法兰。

UR F1... UR F2...

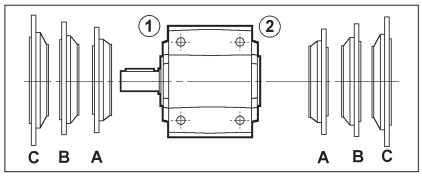

UD F1... UD F2...

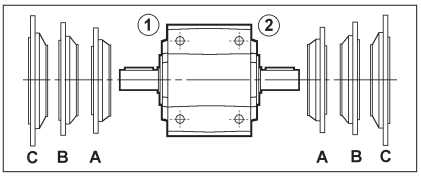

UH... F1... UH... F2...

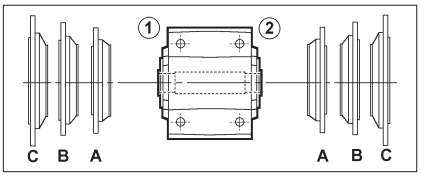

US F1... US F2...

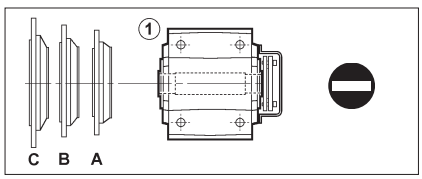

UV F1... UV F2...

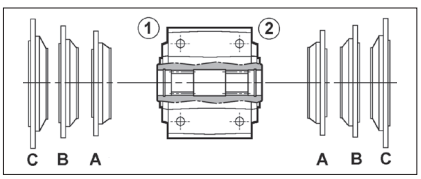

QF...

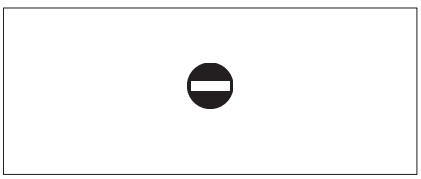

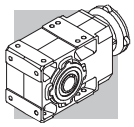

33 命名

减速机

A 35 2 UH40 F1A 49.1 S1 VA .....

选项

安装位置
B3 (标准), **B6, B7, B8, VA, VB**

输入结构

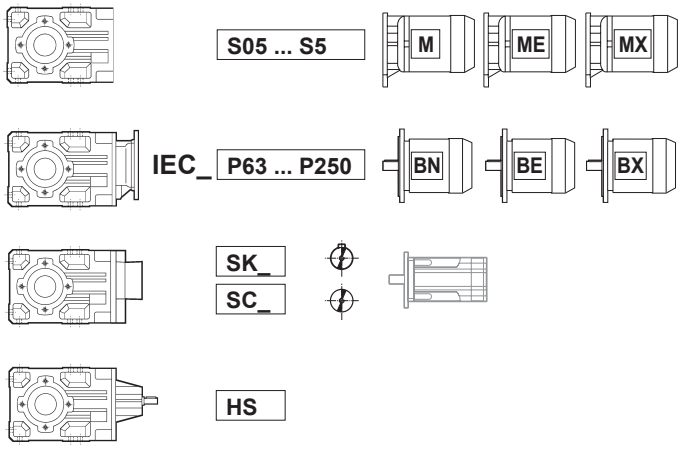

速比

输出法兰尺寸和位置（需要时指定）

F = 法兰输出方式
1,2 = 法兰位置
A,B,C = 法兰尺寸

减速机结构形式

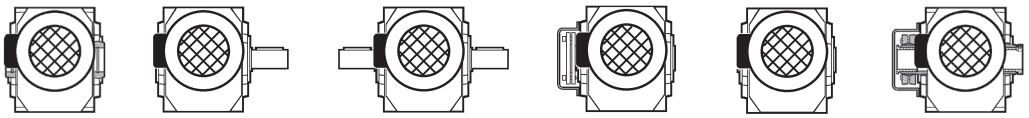

UH_	UR (A 10...A 90)	UD (A 10...A 90)	US (A 05...A 90)	UV (A 20...A 60)	QF (A 10...A 60)

A 05	A 10	A 20	A 30	A 35	A 41	A 50	A 55	A 60	A 70	A 80	A 90
UH25	**UH25**	**UH30**	**UH35**	**UH40**	**UH45**	**UH50**	**UH60**	**UH60**	**UH70**	**UH80**	**UH90**
—	UH30	UH35	UH40	UH35	UH40	UH55	UH50	UH70	UH80	UH90	UH100

传动级数
2 (A 05...A 60), **3** (A 20...A 90), **4** (A 50...A 90)

减速机机座号
05, 10, 20, 30, 35, 41, 50, 55, 60, 70, 80, 90

型号: **A =** 斜齿轮-伞齿轮减速机

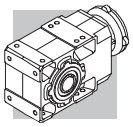

电机 制动器

M 1LA 4 230/400-50 IP54 CLF ..... **W FD** 7.5 R SB 220 SA .....

选项

制动电压

整流器型号
NB, SB, NBR, SBR

制动器手动释放手柄
R, RM

制动转矩

制动器类型
FD (直流制动器)
FA (交流制动器)

电机接线盒位置
W (默认), **N, E, S**

电机与减速机连接方式
— (紧凑型电机)
B5 (IEC电机)

绝缘等级
CL F 标准
CL H 可选

防护等级
IP55 标准 (**IP54** – 制动电机)

电压 – 频率

电机极数
2, 4, 6, 2/4, 2/6, 2/8, 2/12, 4/6, 4/8

电机机座号
0B – 5LA (紧凑型电机)
63A – 280M (IEC 电机)

电机型号
MX = 紧凑型高效三相电机(IE3) **ME** = 紧凑型高效三相电机(IE2) **M** = 紧凑型三相电机
BX = IEC 高效三相电机(IE3) **BE** = IEC 高效三相电机(IE2) **BN** = IEC 三相电机

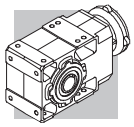

33.1 减速机选项

AL，AR

订购时，根据客户要求提供逆止器，保证输出轴单向旋转。
下表中的减速机可以安装逆止器。
逆止器与RB选项不能同选。

(C 27)

A 30 2*	A 35 2* ⊖ (5.4_11.8)	A 41 2 ⊖ (5.2; 10.1)	A 50 3	A 55 3	A 60 3	A 70 3	A 80 3	A 90 3
			A 50 4	A 55 4	A 60 4	A 70 4	A 80 4	A 90 4

伺服电机接口S_60A, S_ 60B, S_80A不能配逆止器。

订购减速机时，应通过选项AR或AL指定输出轴旋转方向(表C28)。

注意：如果逆止器工作过于频繁，应保证反转扭矩小于减速机额定扭矩M_{n2}的70%。

(C 28)

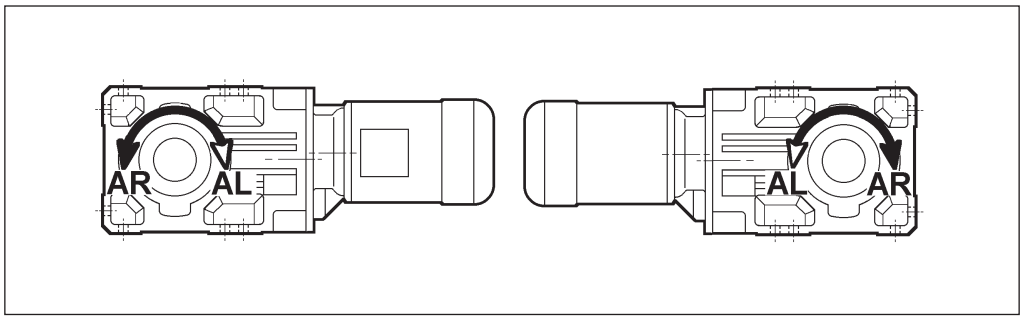

SO

对于机座A05，A10，A20，A30，A35和A41的减速机（通常出厂时已加油），这个选项表示供货时不加油。

LO

对于机座A50，A55，A60，A70，A80和A90减速机（通常出厂时不加油），这个选项表示供货时根据安装位置，加邦飞利使用的合成油。

DV

输入轴采用双油封（仅对一体化减速电机适用）。

VV

输入轴采用氟橡胶材质的油封。

PV

输入输出轴都采用氟橡胶材质的油封。

Bonfiglioli Riduttori

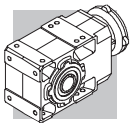

TKL

Taconite油封用于A70 – A90减速机的输出轴，适用于粉尘环境。
Taconite油封是密封圈，迷宫式密封和油脂腔的组合。
加注油脂必须列为常规的保养项目。
所有轴上都装配氟橡胶油封。
B6安装位时，请咨询邦飞利技术服务部。

HDB

在高悬臂载荷应用中，可以提供比标准悬臂载荷更高的减速机。
订单需要高悬臂载荷时，可以指定HDB选项。
HDB选项仅对机座A10到A50的单实心输出轴减速机有效。
下表指定了HDB增强型减速机的最大载荷。数值是指输出轴中心的载荷。

(C 29)

HDB	R_{N2}					
	A 10	A 20	A 30	A 35	A 41	A 50
n_1 = 2800	**5500 N**	**6200 N**	**9600 N**	**12000 N**	**15000 N**	**20000 N**
⚠			8970 N @ i=5.4	10200 N @ i=5.4 10600 N @ i=6.4 11000 N @ i=7.0	11500 N @ i=5.2 12700 N @ i=7.1 13300 N @ i=8.3 13700 N @ i=9.2	19000 N @ i=7.7
n_1 = 1400	**5500 N**	**6200 N**	**9600 N**	**12000 N**	**15000 N**	**20000 N**
n_1 = 900	**5500 N**	**6200 N**	**9600 N**	**12000 N**	**15000 N**	**20000 N**
n_1 = 500	**5500 N**	**6200 N**	**9600 N**	**12000 N**	**15000 N**	**20000 N**

增强型轴承也允许更高的轴向载荷，如下：

$$A_{N2} = 0.35 \times R_{n2} \quad (24)$$

没有悬臂载荷的应用中，轴向载荷增加到：

$$A_{N2} = 0.70 \times R_{n2} \quad (25)$$

如果载荷同时施加到输出轴的两端，请咨询邦飞利技术服务部校验该应用。

RB

A10, A20, A30, A35, A41, A50, A55和A60减速机一般配置标准齿隙，带RB选项的减速机则配置低齿隙（除带逆止器AL或AR外）。
下表是减速机对应的齿隙数值。

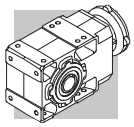

(C 30)

		standard		RB	
A05	i =	5.5_12.3 - ⛀(10.6)	10.6_91.6 - ⛀(12.3)	—	
	φ [']	**28**	**18**		
A10	i =	5.5_12.3 - ⛀(10.6)	10.6_91.6 - ⛀(12.3)	5.5_12.3 - ⛀(10.6)	10.6_91.6 - ⛀(12.3)
	φ [']	**27**	**17**	**12**	**8**
A20	i =	5.4_12 - ⛀(10.3)	10.3_380.9 - ⛀(12)	5.4_12 - ⛀(10.3)	10.3_380.9 - ⛀(12)
	φ [']	**23**	**15**	**11**	**7**
A30	i =	5.4_11.8 - ⛀(10.5)	10.5_400.8 - ⛀(11.8)	5.4_11.8 - ⛀(10.5)	10.5_400.8 - ⛀(11.8)
	φ [']	**22**	**15**	**10**	**7**
A35	i =	5.4_11.8	13.1_393.2	5.4_11.8	13.1_393.2
	φ [']	**20**	**11**	**9**	**6**
A41	i =	5.2_11.7 - ⛀(10.1)	10.1_376.8 - ⛀(11.7)	5.2-11.7 - ⛀(10.1)	10.1_376.8 - ⛀(11.7)
	φ [']	**19**	**13**	**9**	**6**
A50	i =	7.7_778.2		7.7_778.2	
	φ [']	**16**		**7**	
A55	i =	4.9_19.2	23.8_793	4.9_19.2	23.8_793
	φ [']	**17**	**11**	**8**	**6**
A60	i =	7.9_20.6	25.7_755.4	7.9_20.6	25.7_755.4
	φ [']	**12**	**9**	**5**	**4**
A70	i =	9.4_21.3	23.5_1715	—	
	φ [']	**14**	**12**		
A80	i =	9.8_20.9	22.6_1558	—	
	φ [']	**13**	**11**		
A90	i =	9.7_21	22.3_1632	—	
	φ [']	**12**	**10**		

交货期请联系邦飞利销售网络。

表面保护

如果没有特别的防护等级要求，减速机表面的耐腐蚀等级至少达到C2 (UNI EN ISO 12944-2)，如果要求更高，可以提供C3和C4等级。

(C 31)

表面保护	典型环境	最高表面温度.	按UNI EN ISO 12944-2对腐蚀进行分类
C3	城市和工业环境，相对湿度高达100%的（中等空气污染）	120°C	C3
C4	工业区、沿海地区、化工厂，相对湿度高达100%的（重度空气污染）	120°C	C4

C3或C4保护等级的减速机颜色有多种选择。如果没有特定的要求（见“喷漆”选项），默认颜色为RAL 7042。
另外也可以提供C5等级（UNI EN ISO 12944-2）。详细情况请联系我们的技术服务部门。

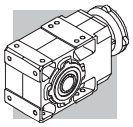

喷漆

下表为减速机表面保护等级为C3或C4时可选用的颜色。

(C 32)

油漆	颜色	RAL 号码
RAL7042*	交通灰A	7042
RAL5010	龙胆蓝	5010
RAL9005	乌黑	9005
RAL9006	铝白色	9006
RAL9010	纯白色	9010

* 如没指定颜色，减速机按标准颜色供货。

说明– “喷漆”选项只能和“表面保护”选项结合选择。

认证

AC – 符合性证明
此文件证明产品符合采购订单以及邦飞利质量体系的适用程序。

CC – 检查证明
此文件要求检查订单的合规性，产品外观和配合尺寸；
以及无负载情况下主要的功能性参数，和在静态和动态时油封的密封性。
被检查的产品取样于同一海运批次并单独做好标记。

33.2 附件

请查看样本的44章。

33.3 电机选项

AL, AR

这一止逆器选配件也可用于M、ME或者MX电机，而且当减速机存在相同选配件时无法兼容。
下表为基于不同选项对应的减速机可转动方向。

(C 34)

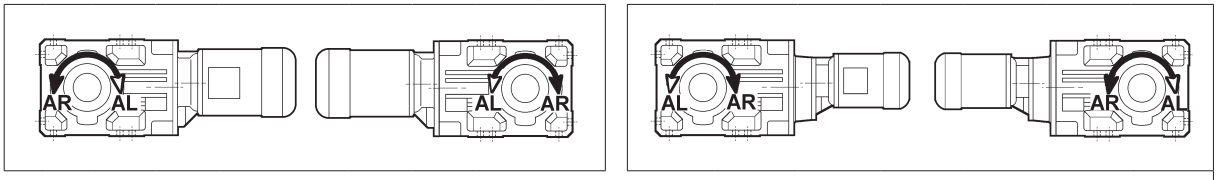

2x	A 05	A 10	A 20	A 30	A 35	A 41	A 50	A 60
3x	A 60	A 70	A 80	A 90				
4x	A 50	A 55						

2x	A 55					
3x	A 20	A 30	A 35	A 41	A 50	A 55
4x	A 60	A 70	A 80	A 90		

更多信息请咨询邦飞利电机部门。

34 安装位置和接线盒位置

从风扇端看电机可以确定电机接线盒的位置；标准位置以黑字表示 (W)。

制动器手动释放杆的角度位置
除非另有说明，否则制动电机的手动释放装置位于接线盒90°位置。
不同角度可以通过相应的选项来指定。

(C 33)

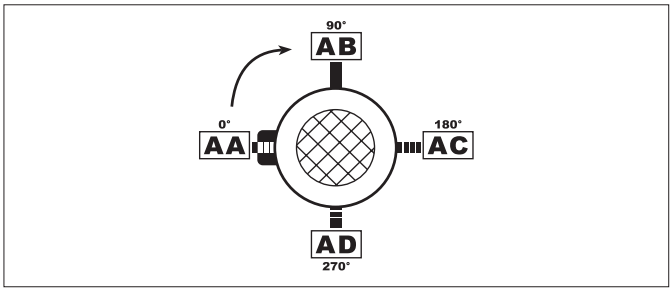

A ...

B3

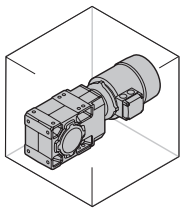
_S

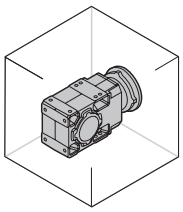
_P(IEC) _SK / _SC

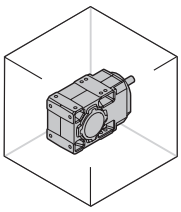
_HS

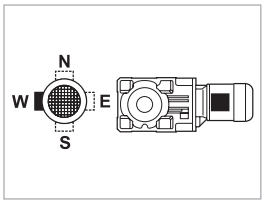

B6

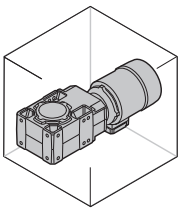
_S

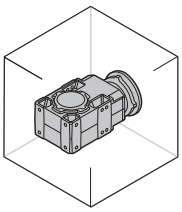
_P(IEC) _SK / _SC

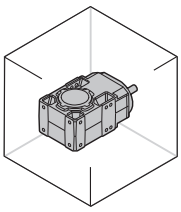
_HS

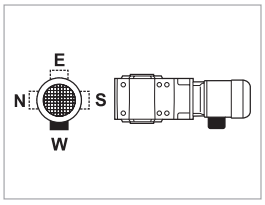

B7

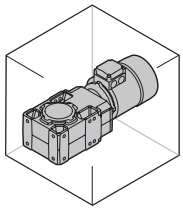
_S

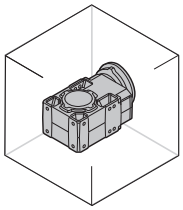
_P(IEC) _SK / _SC

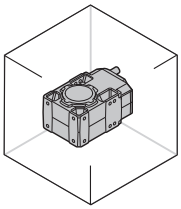
_HS

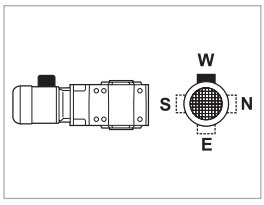

B8

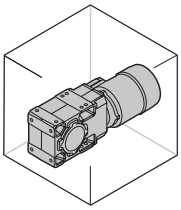
_S

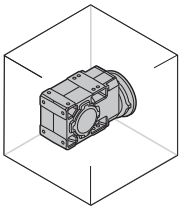
_P(IEC) _SK / _SC

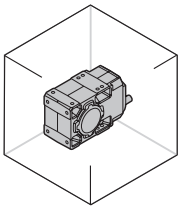
_HS

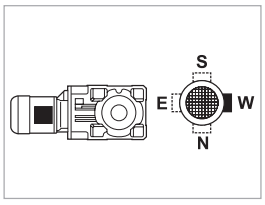

VA

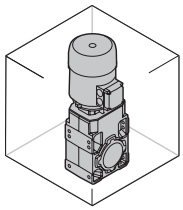
_S

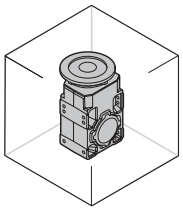
_P(IEC) _SK / _SC

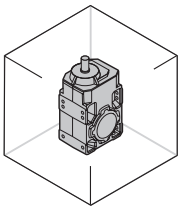
_HS

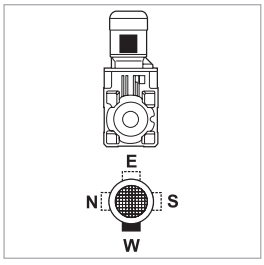

VB

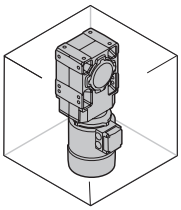
_S

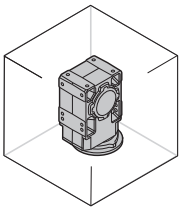
_P(IEC) _SK / _SC

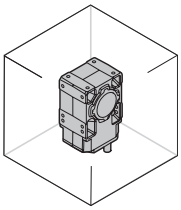
_HS

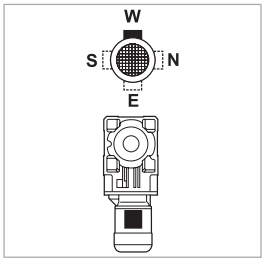

W = Default

35 悬臂载荷

作用于输入轴/输出轴上的扭矩将在相应的轴上产生径向力。轴的合成力必须与轴承和轴的许用载荷相一致。也就是说轴所受的力（R_{c1}为输入轴，R_{c2}为输出轴）必须小于或等于许用的悬臂载荷（R_{n1}为输入轴，R_{n2}为输出轴）。许用悬臂载荷在减速机选型表列出。
下面给出的公式中，下标1指输入轴，下标2指输出轴。外部传动产生的载荷可以通过下面的公式近似求出：

$$R_{c1}\,[N] = \frac{2000 \cdot M_1[Nm] \cdot K_r}{d\,[mm]} \quad ; \quad R_{c2}\,[N] = \frac{2000 \cdot M_2[Nm] \cdot K_r}{d\,[mm]} \qquad (26)$$

(C 35)

M_1 [Nm]	输入轴所受的转矩
M_2 [Nm]	输出轴所受的转矩
d [mm]	连接到轴上部件的节径
K_r = 1	链条传动

K_r = 1,25	齿轮传动
K_r = 1,5	三角皮带传动
K_r = 2,0	平皮带传动

悬臂载荷的校核根据作用在轴中点或远端而不同：

(C 36)

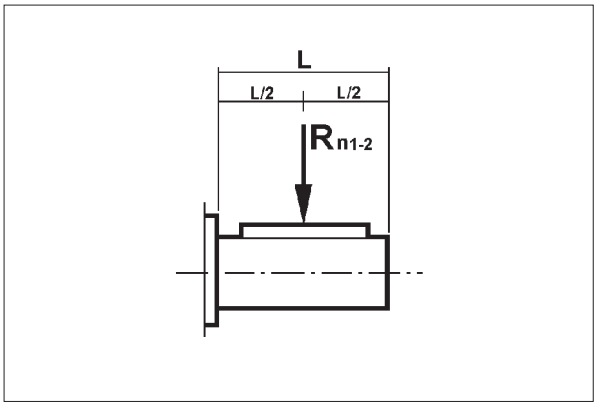

(C 37)

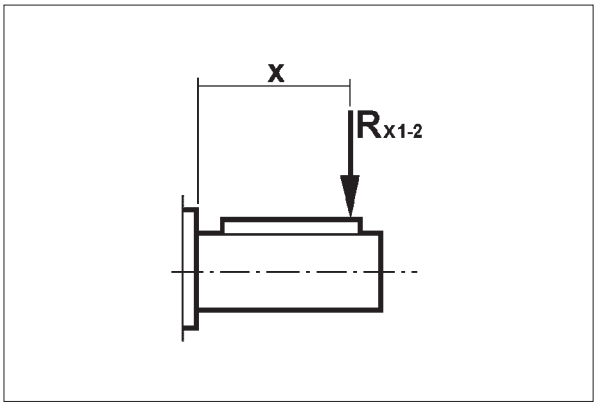

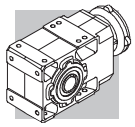

a)径向力作用在轴中点，表(C36)

轴的径向力与样本的许用悬臂载荷比较应该用以下条件校核：
Rc1≤ Rn1 [输入轴]

或

Rc2≤ Rn2 [输出轴]

b) 径向力不作用在轴中点，表(C37)

当载荷作用在距轴肩“x”的地方，许用载荷必须针对这个位置计算。
修正的许用悬臂载荷Rx1（输入）和Rx2（输出）可分别通过原始额定值Rn1和Rn2与如下系数计算出来：

$$\frac{a}{b+x} \qquad (27)$$

(C 38)

	负载位置系数					
	输出轴			输入轴		
	a	**b**	**c**	**a**	**b**	**c**
A 05 2	116	86	450	—	—	—
A 10 2	123	101	600	21	1	300
A 20 2	150	120	750	40	20	350
A 20 3	150	120	750	21	1	300
A 30 2	168	138	900	38.5	18.5	350
A 30 3	168	138	900	21	1	300
A 35 2	182.5	147.5	950	38.5	18.5	350
A 35 3	182.5	147.5	950	21	1	300
A 41 2	198	158	1050	49.5	24.5	450
A 41 3	198	158	1050	40	20	350
A 50 2 - A 50 3	242.5	201.5	1300	49.5	24.5	450
A 50 4	242.5	201.5	1300	38.5	18.5	350
A 55 2 - A 55 3	231.5	179	1300	49.5	24.5	450
A 55 4	231.5	179	1300	38.5	18.5	350
A 60 2 - A 60 3	242.5	190	1550	55.5	25.5	600
A 60 4	242.5	190	1550	49.5	24.5	450
A 70 3	295.5	230.5	1900	86	31	1000
A 70 4	295.5	230.5	1900	49.5	24.5	450
A 80 3	345	280	2400	86	31	1000
A 80 4	345	280	2400	49.5	24.5	450
A 90 3	432	327	3000	116	46	1400
A 90 4	432	327	3000	49.5	24.5	450

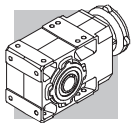

校核程序如下：

输入轴

计算：

$$R_{x1} = R_{n1} \cdot \frac{a}{b + x} \quad (28)$$

X需要满足的条件：

$$\frac{L}{2} \leq x \leq c \quad (29)$$

最后必须校核下列条件：

$$R_{c1} \leq R_{x1} \quad (30)$$

输出轴

计算：

$$R_{x2} = R_{n2} \cdot \frac{a}{b + x} \quad (31)$$

X需要满足的条件：

$$\frac{L}{2} \leq x \leq c \quad (32)$$

最后必须校核下列条件：

$$R_{c2} \leq R_{x2} \quad (33)$$

36 轴向载荷A_{n1}, A_{n2}

输入输出轴许用轴向载荷A_{n1}和A_{n2}可分别由输入输出径向载荷R_{n1}和R_{n2}，通过以下公式计算得出：

$$A_{n1} = R_{n1} \cdot 0.2$$
$$A_{n2} = R_{n2} \cdot 0.2 \quad (34)$$

以上公式也适用轴向径向载荷同时作用的情况。仅当没有悬臂载荷作用时，许用轴向载荷A_n等于额定悬臂载荷R_n的50%。
如果轴向载荷超过许用值或大于径向载荷，请联系邦飞利对具体应用进行深入分析。

37 轴的旋转方向

下表说明标准2,3,4级斜齿轮-锥齿轮减速机的旋转方向。

(C 39)

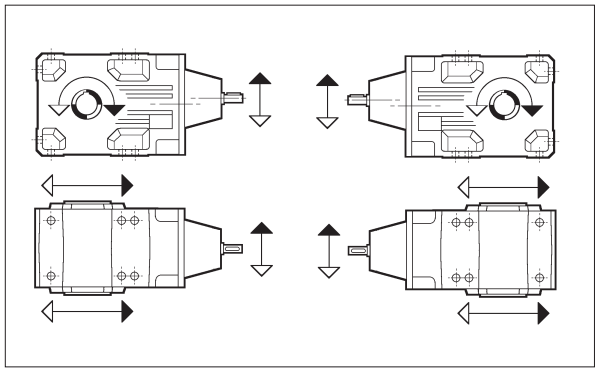

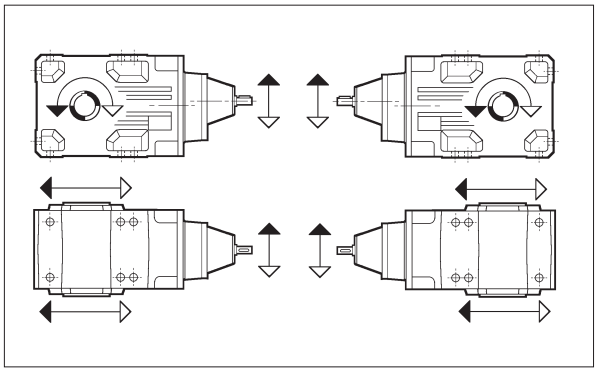

2x	A 05	A 10	A 20	A 30	A 35	A 41	A 50	A 60
3x	A 60	A 70	A 80	A 90				
4x	A 50	A 55						

2x	A 55					
3x	A 20	A 30	A 35	A 41	A 50	A 55
4x	A 60	A 70	A 80	A 90		

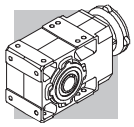

38 减速电机选型表

不带制动器的电机选型时需要考虑 EC 640/2009标准 (见样本的M章节)，当电机额定功率小于0.75KW时，BN/M电机都可选。
考虑到EC640/2009标准并不适用带制动器的电机，所以制动电机只有BN/M电机可选，不包括BX, BE, MX和ME电机。

0.09 kW

n_2 min^{-1}	M_2 Nm	S	i	R_{n2} N	IE1		IEC IE1	
0.51	1492	3.4	1715	50000			**A704_1715 P63 BN63A6**	297
1.1	677	2.2	778.2	20000			**A504_778.2 P63 BN63A6**	285
1.2	616	2.4	707.9	20000			**A504_707.9 P63 BN63A6**	285
1.4	549	2.7	631.2	20000			**A504_631.2 P63 BN63A6**	285
1.5	499	3.0	574.2	20000			**A504_574.2 P63 BN63A6**	285
1.7	461	3.3	529.5	20000			**A504_529.5 P63 BN63A6**	285
2.2	356	1.0	400.8	9600	**A303_400.8 S05 M05A6**	272	**A303_400.8 P63 BN63A6**	273
2.6	302	1.7	339.3	12000	**A353_339.3 S05 M05A6**	276	**A353_339.3 P63 BN63A6**	277
3.0	259	3.3	291.7	15000	**A413_291.7 S05 M05A6**	280	**A413_291.7 P63 BN63A6**	281
3.5	221	2.7	248.1	12000	**A353_248.1 S05 M05A6**	276	**A353_248.1 P63 BN63A6**	277
4.1	193	2.1	216.6	9600	**A303_216.6 S05 M05A6**	272	**A303_216.6 P63 BN63A6**	273
4.9	159	1.6	178.3	6200	**A203_178.3 S05 M05A6**	268	**A203_178.3 P63 BN63A6**	269
5.8	134	2.8	150.7	9600	**A303_150.7 S05 M05A6**	272	**A303_150.7 P63 BN63A6**	273
6.8	115	2.2	129.1	6200	**A203_129.1 S05 M05A6**	268	**A203_129.1 P63 BN63A6**	269
8.1	97	2.5	109.2	6200	**A203_109.2 S05 M05A6**	268	**A203_109.2 P63 BN63A6**	269
9.6	84	1.5	91.6	5500	**A102_91.6 S05 M05A6**	264	**A102_91.6 P63 BN63A6**	265
11.5	70	2.1	76.4	5500	**A102_76.4 S05 M05A6**	264	**A102_76.4 P63 BN63A6**	265
13.3	61	2.5	65.9	5500	**A102_65.9 S05 M05A6**	264	**A102_65.9 P63 BN63A6**	265
15.0	54	2.8	58.6	5500	**A102_58.6 S05 M05A6**	264	**A102_58.6 P63 BN63A6**	265
17.2	47	3.2	51.3	5500	**A102_51.3 S05 M05A6**	264	**A102_51.3 P63 BN63A6**	265
19.4	42	2.4	45.4	4250	**A052_45.4 S05 M05A6**	261	**A052_45.4 P63 BN63A6**	261
21.5	38	2.7	40.9	4120	**A052_40.9 S05 M05A6**	261	**A052_40.9 P63 BN63A6**	261
25.1	32	3.1	35.1	3950	**A052_35.1 S05 M05A6**	261	**A052_35.1 P63 BN63A6**	261
27.3	30	3.4	32.2	3850	**A052_32.2 S05 M05A6**	261	**A052_32.2 P63 BN63A6**	261
31	26	3.8	28.6	3720	**A052_28.6 S05 M05A6**	261	**A052_28.6 P63 BN63A6**	261
35	23	4.4	25.5	3590	**A052_25.5 S05 M05A6**	261	**A052_25.5 P63 BN63A6**	261
37	22	4.6	23.8	3520	**A052_23.8 S05 M05A6**	261	**A052_23.8 P63 BN63A6**	261
41	19.6	5.3	21.4	3410	**A052_21.4 S05 M05A6**	261	**A052_21.4 P63 BN63A6**	261
47	17.1	5.9	18.6	3270	**A052_18.6 S05 M05A6**	261	**A052_18.6 P63 BN63A6**	261
53	15.1	6.8	16.4	3150	**A052_16.4 S05 M05A6**	261	**A052_16.4 P63 BN63A6**	261
63	12.8	7.8	13.9	2990	**A052_13.9 S05 M05A6**	261	**A052_13.9 P63 BN63A6**	261
72	11.3	8.8	12.3	2880	**A052_12.3 S05 M05A6**	261	**A052_12.3 P63 BN63A6**	261
83	9.7	10.3	10.6	2740	**A052_10.6 S05 M05A6**	261	**A052_10.6 P63 BN63A6**	261
92	8.8	11.3	9.6	2670	**A052_9.6 S05 M05A6**	261	**A052_9.6 P63 BN63A6**	261
103	7.8	13.2	8.5	2570	**A052_8.5 S05 M05A6**	261	**A052_8.5 P63 BN63A6**	261
122	6.6	15.1	7.2	2440	**A052_7.2 S05 M05A6**	261	**A052_7.2 P63 BN63A6**	261
139	5.8	17.8	6.3	2340	**A052_6.3 S05 M05A6**	261	**A052_6.3 P63 BN63A6**	261
161	5.0	19.9	5.5	2230	**A052_5.5 S05 M05A6**	261	**A052_5.5 P63 BN63A6**	261

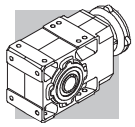

0.12 kW

n_2 min-1	M_2 Nm	S	i	R_{n2} N	IE1		IEC IE1	
0.51	2012	2.5	1715	50000			**A704_1715 P63 BN63B6**	297
0.55	1857	2.7	1583	50000			**A704_1583 P63 BN63B6**	297
0.65	1579	3.2	1346	50000			**A704_1346 P63 BN63B6**	297
0.70	1457	3.4	1242	50000			**A704_1242 P63 BN63B6**	297
1.1	913	1.6	778.2	20000			**A504_778.2 P63 BN63B6**	285
1.2	818	3.4	697.3	30000			**A604_697.3 P63 BN63B6**	293
1.4	740	2.0	631.2	20000			**A504_631.2 P63 BN63B6**	285
1.6	621	2.4	529.5	20000			**A504_529.5 P63 BN63B6**	285
1.7	588	2.5	778.2	20000			**A504_778.2 P63 BN63A4**	285
1.9	535	2.8	707.9	20000			**A504_707.9 P63 BN63A4**	285
2.1	477	3.1	631.2	20000			**A504_631.2 P63 BN63A4**	285
2.4	434	3.5	574.2	20000			**A504_574.2 P63 BN63A4**	285
3.4	310	1.2	400.8	9600	**A303_400.8 S05 M05A4**	272	**A303_400.8 P63 BN63A4**	273
3.4	304	1.5	393.2	12000	**A353_393.2 S05 M05A4**	276	**A353_393.2 P63 BN63A4**	277
3.6	291	2.9	376.8	15000	**A413_376.8 S05 M05A4**	280	**A413_376.8 P63 BN63A4**	281
3.8	275	1.3	356.3	9600	**A303_356.3 S05 M05A4**	272	**A303_356.3 P63 BN63A4**	273
4.0	262	2.0	339.3	12000	**A353_339.3 S05 M05A4**	276	**A353_339.3 P63 BN63A4**	277
4.1	255	1.0	329.4	6200	**A203_329.4 S05 M05A4**	268	**A203_329.4 P63 BN63A4**	269
4.2	251	3.4	324.2	15000	**A413_324.2 S05 M05A4**	280	**A413_324.2 P63 BN63A4**	281
4.3	243	1.6	314.5	9600	**A303_314.5 S05 M05A4**	272	**A303_314.5 P63 BN63A4**	273
4.4	236	2.5	305.4	12000	**A353_305.4 S05 M05A4**	276	**A353_305.4 P63 BN63A4**	277
4.6	226	1.1	292.8	6200	**A203_292.8 S05 M05A4**	268	**A203_292.8 P63 BN63A4**	269
5.0	210	1.8	271.5	9600	**A303_271.5 S05 M05A4**	272	**A303_271.5 P63 BN63A4**	273
5.0	209	2.9	270.7	12000	**A353_270.7 S05 M05A4**	276	**A353_270.7 P63 BN63A4**	277
5.2	201	1.2	260.5	6200	**A203_260.5 S05 M05A4**	268	**A203_260.5 P63 BN63A4**	269
5.4	192	3.1	248.1	12000	**A353_248.1 S05 M05A4**	276	**A353_248.1 P63 BN63A4**	277
5.5	189	2.0	244.3	9600	**A303_244.3 S05 M05A4**	272	**A303_244.3 P63 BN63A4**	273
6.0	172	3.5	223.2	12000	**A353_223.2 S05 M05A4**	276	**A353_223.2 P63 BN63A4**	277
6.1	171	1.5	221.3	6200	**A203_221.3 S05 M05A4**	268	**A203_221.3 P63 BN63A4**	269
6.2	167	2.2	216.6	9600	**A303_216.6 S05 M05A4**	272	**A303_216.6 P63 BN63A4**	273
6.8	154	1.6	199.2	6200	**A203_199.2 S05 M05A4**	268	**A203_199.2 P63 BN63A4**	269
6.8	153	2.3	198.5	9600	**A303_198.5 S05 M05A4**	272	**A303_198.5 P63 BN63A4**	273
7.6	138	2.5	178.5	9600	**A303_178.5 S05 M05A4**	272	**A303_178.5 P63 BN63A4**	273
7.6	138	1.8	178.3	6200	**A203_178.3 S05 M05A4**	268	**A203_178.3 P63 BN63A4**	269
8.3	126	1.9	163.4	6200	**A203_163.4 S05 M05A4**	268	**A203_163.4 P63 BN63A4**	269
8.4	125	2.7	161.4	9600	**A303_161.4 S05 M05A4**	272	**A303_161.4 P63 BN63A4**	273
9.0	116	2.8	150.7	9600	**A303_150.7 S05 M05A4**	272	**A303_150.7 P63 BN63A4**	273
9.2	113	2.0	146.1	6200	**A203_146.1 S05 M05A4**	268	**A203_146.1 P63 BN63A4**	269
9.8	106	3.0	137.4	9600	**A303_137.4 S05 M05A4**	272	**A303_137.4 P63 BN63A4**	273
10.5	100	2.2	129.1	6200	**A203_129.1 S05 M05A4**	268	**A203_129.1 P63 BN63A4**	269
11.2	93	2.3	120.5	6200	**A203_120.5 S05 M05A4**	268	**A203_120.5 P63 BN63A4**	269
11.2	93	3.2	120.5	9600	**A303_120.5 S05 M05A4**	272	**A303_120.5 P63 BN63A4**	273
12.4	84	2.4	109.2	6200	**A203_109.2 S05 M05A4**	268	**A203_109.2 P63 BN63A4**	269
14.6	74	2.7	92.3	6200	**A202_92.3 S05 M05A4**	268	**A202_92.3 P63 BN63A4**	269
14.7	73	1.4	91.6	4420	**A052_91.6 S05 M05A4**	261	**A052_91.6 P63 BN63A4**	261
14.7	73	1.8	91.6	5500	**A102_91.6 S05 M05A4**	264	**A102_91.6 P63 BN63A4**	265
16.9	64	3.3	79.9	6200	**A202_79.9 S05 M05A4**	268	**A202_79.9 P63 BN63A4**	269
17.7	61	1.6	76.4	4230	**A052_76.4 S05 M05A4**	261	**A052_76.4 P63 BN63A4**	261
17.7	61	2.5	76.4	5500	**A102_76.4 S05 M05A4**	264	**A102_76.4 P63 BN63A4**	265
20.5	53	1.9	65.9	4070	**A052_65.9 S05 M05A4**	261	**A052_65.9 P63 BN63A4**	261
20.5	53	2.8	65.9	5500	**A102_65.9 S05 M05A4**	264	**A102_65.9 P63 BN63A4**	265
23.0	47	2.1	58.6	3950	**A052_58.6 S05 M05A4**	261	**A052_58.6 P63 BN63A4**	261
23.0	47	3.2	58.6	5500	**A102_58.6 S05 M05A4**	264	**A102_58.6 P63 BN63A4**	265
26.3	41	2.4	51.3	3810	**A052_51.3 S05 M05A4**	261	**A052_51.3 P63 BN63A4**	261
29.7	36	2.8	45.4	3680	**A052_45.4 S05 M05A4**	261	**A052_45.4 P63 BN63A4**	261
33	33	3.1	40.9	3570	**A052_40.9 S05 M05A4**	261	**A052_40.9 P63 BN63A4**	261
38	28	3.6	35.1	3420	**A052_35.1 S05 M05A4**	261	**A052_35.1 P63 BN63A4**	261
42	26	3.9	32.2	3340	**A052_32.2 S05 M05A4**	261	**A052_32.2 P63 BN63A4**	261
47	23	4.4	28.6	3220	**A052_28.6 S05 M05A4**	261	**A052_28.6 P63 BN63A4**	261
53	20	4.9	25.5	3110	**A052_25.5 S05 M05A4**	261	**A052_25.5 P63 BN63A4**	261
57	19	5.3	23.8	3050	**A052_23.8 S05 M05A4**	261	**A052_23.8 P63 BN63A4**	261
62	17.3	5.8	13.9	2960	**A052_13.9 S05 M05B6**	261	**A052_13.9 P63 BN63B6**	261
63	17.1	5.9	21.4	2950	**A052_21.4 S05 M05A4**	261	**A052_21.4 P63 BN63A4**	261
73	14.8	6.7	18.6	2830	**A052_18.6 S05 M05A4**	261	**A052_18.6 P63 BN63A4**	261
82	13.1	7.6	16.4	2730	**A052_16.4 S05 M05A4**	261	**A052_16.4 P63 BN63A4**	261

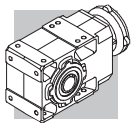

0.12 kW

n_2 min^{-1}	M_2 Nm	S	i	R_{n2} N	IE1		IEC IE1	
90	11.9	8.4	9.6	2640	**A052_9.6 S05 M05B6**	261	**A052_9.6 P63 BN63B6**	261
97	11.1	9.0	13.9	2590	**A052_13.9 S05 M05A4**	261	**A052_13.9 P63 BN63A4**	261
110	9.8	10.2	12.3	2500	**A052_12.3 S05 M05A4**	261	**A052_12.3 P63 BN63A4**	261
121	8.9	11.2	7.2	2420	**A052_7.2 S05 M05B6**	261	**A052_7.2 P63 BN63B6**	261
128	8.4	11.9	10.6	2380	**A052_10.6 S05 M05A4**	261	**A052_10.6 P63 BN63A4**	261
140	7.7	13.0	9.6	2310	**A052_9.6 S05 M05A4**	261	**A052_9.6 P63 BN63A4**	261
159	6.8	14.7	8.5	2220	**A052_8.5 S05 M05A4**	261	**A052_8.5 P63 BN63A4**	261
187	5.8	17.4	7.2	2110	**A052_7.2 S05 M05A4**	261	**A052_7.2 P63 BN63A4**	261
213	5.1	19.8	6.3	2020	**A052_6.3 S05 M05A4**	261	**A052_6.3 P63 BN63A4**	261
247	4.4	21.8	5.5	1930	**A052_5.5 S05 M05A4**	261	**A052_5.5 P63 BN63A4**	261

0.18 kW

n_2 min^{-1}	M_2 Nm	S	i	R_{n2} N	IE1		IEC IE1	
0.52	2917	1.7	1715	50000	**A704_1715 S1 M1SC6**	296	**A704_1715 P71 BN71A6**	297
0.58	2649	3.0	1558	65000	**A804_1558 S1 M1SC6**	299	**A804_1558 P71 BN71A6**	300
0.67	2279	3.5	1340	65000	**A804_1340 S1 M1SC6**	299	**A804_1340 P71 BN71A6**	300
0.77	1989	2.5	1715	50000			**A704_1715 P63 BN63B4**	297
0.83	1836	2.7	1583	50000			**A704_1583 P63 BN63B4**	297
0.98	1561	3.2	1346	50000			**A704_1346 P63 BN63B4**	297
1.1	1441	3.5	1242	50000			**A704_1242 P63 BN63B4**	297
1.3	1186	2.4	697.3	30000	**A604_697.3 S1 M1SC6**	292	**A604_697.3 P71 BN71A6**	293
1.5	996	2.8	585.8	30000	**A604_585.8 S1 M1SC6**	292	**A604_585.8 P71 BN71A6**	293
1.7	902	1.7	778.2	20000			**A504_778.2 P63 BN63B4**	285
1.7	876	3.2	755.4	30000			**A604_755.4 P63 BN63B4**	293
1.9	821	1.8	707.9	20000			**A504_707.9 P63 BN63B4**	285
1.9	809	3.5	697.3	30000			**A604_697.3 P63 BN63B4**	293
2.1	732	2.0	631.2	20000			**A504_631.2 P63 BN63B4**	285
2.3	666	2.3	574.2	20000			**A504_574.2 P63 BN63B4**	285
2.5	614	2.4	529.5	20000			**A504_529.5 P63 BN63B4**	285
2.7	559	2.7	481.6	20000			**A504_481.6 P63 BN63B4**	285
3.0	518	2.9	446.8	20000			**A504_446.8 P63 BN63B4**	285
3.2	471	3.2	406.4	20000			**A504_406.4 P63 BN63B4**	285
3.4	466	1.0	393.2	12000	**A353_393.2 S05 M05B4**	276	**A353_393.2 P63 BN63B4**	277
3.5	447	1.9	376.8	15000	**A413_376.8 S05 M05B4**	280	**A413_376.8 P63 BN63B4**	281
3.6	424	3.5	365.6	20000			**A504_365.6 P63 BN63B4**	285
3.7	422	0.9	356.3	9600	**A303_356.3 S05 M05B4**	272	**A303_356.3 P63 BN63B4**	273
3.9	402	1.3	339.3	12000	**A353_339.3 S05 M05B4**	276	**A353_339.3 P63 BN63B4**	277
4.1	384	2.2	324.2	15000	**A413_324.2 S05 M05B4**	280	**A413_324.2 P63 BN63B4**	281
4.2	373	1.0	314.5	9600	**A303_314.5 S05 M05B4**	272	**A303_314.5 P63 BN63B4**	273
4.3	362	1.7	305.4	12000	**A353_305.4 S05 M05B4**	276	**A353_305.4 P63 BN63B4**	277
4.5	346	2.5	291.7	15000	**A413_291.7 S05 M05B4**	280	**A413_291.7 P63 BN63B4**	281
4.9	322	1.2	271.5	9600	**A303_271.5 S05 M05B4**	272	**A303_271.5 P63 BN63B4**	273
4.9	321	1.9	270.7	12000	**A353_270.7 S05 M05B4**	276	**A353_270.7 P63 BN63B4**	277
5.0	311	2.7	262.5	15000	**A413_262.5 S05 M05B4**	280	**A413_262.5 P63 BN63B4**	281
5.3	294	2.0	248.1	12000	**A353_248.1 S05 M05B4**	276	**A353_248.1 P63 BN63B4**	277
5.4	290	1.3	244.3	9600	**A303_244.3 S05 M05B4**	272	**A303_244.3 P63 BN63B4**	273
5.5	285	3.0	240.6	15000	**A413_240.6 S05 M05B4**	280	**A413_240.6 P63 BN63B4**	281
5.9	265	2.3	223.2	12000	**A353_223.2 S05 M05B4**	276	**A353_223.2 P63 BN63B4**	277
6.0	262	1.0	221.3	6200	**A203_221.3 S05 M05B4**	268	**A203_221.3 P63 BN63B4**	269
6.1	258	3.3	217.4	15000	**A413_217.4 S05 M05B4**	280	**A413_217.4 P63 BN63B4**	281
6.1	257	1.4	216.6	9600	**A303_216.6 S05 M05B4**	272	**A303_216.6 P63 BN63B4**	273
6.5	239	2.5	201.8	12000	**A353_201.8 S05 M05B4**	276	**A353_201.8 P63 BN63B4**	277
6.6	236	1.1	199.2	6200	**A203_199.2 S05 M05B4**	268	**A203_199.2 P63 BN63B4**	269
6.6	235	1.5	198.5	9600	**A303_198.5 S05 M05B4**	272	**A303_198.5 P63 BN63B4**	273
7.0	223	2.7	188.3	12000	**A353_188.3 S05 M05B4**	276	**A353_188.3 P63 BN63B4**	277
7.4	212	1.6	178.5	9600	**A303_178.5 S05 M05B4**	272	**A303_178.5 P63 BN63B4**	273
7.4	211	1.2	178.3	6200	**A203_178.3 S05 M05B4**	268	**A203_178.3 P63 BN63B4**	269
7.7	204	2.9	171.8	12000	**A353_171.8 S05 M05B4**	276	**A353_171.8 P63 BN63B4**	277
8.1	194	1.2	163.4	6200	**A203_163.4 S05 M05B4**	268	**A203_163.4 P63 BN63B4**	269
8.2	191	1.8	161.4	9600	**A303_161.4 S05 M05B4**	272	**A303_161.4 P63 BN63B4**	273

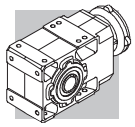

0.18 kW

n_2 min-1	M_2 Nm	S	i	R_{n2} N	IE1		IEC IE1	
8.8	179	1.8	150.7	9600	**A303_150.7 S05 M05B4**	272	**A303_150.7 P63 BN63B4**	273
8.8	179	3.4	150.6	12000	**A353_150.6 S05 M05B4**	276	**A353_150.6 P63 BN63B4**	277
9.0	173	1.3	146.1	6200	**A203_146.1 S05 M05B4**	268	**A203_146.1 P63 BN63B4**	269
9.6	163	1.9	137.4	9600	**A303_137.4 S05 M05B4**	272	**A303_137.4 P63 BN63B4**	273
10.2	153	1.4	129.1	6200	**A203_129.1 S05 M05B4**	268	**A203_129.1 P63 BN63B4**	269
11.0	143	1.5	120.5	6200	**A203_120.5 S05 M05B4**	268	**A203_120.5 P63 BN63B4**	269
11.0	143	2.1	120.5	9600	**A303_120.5 S05 M05B4**	272	**A303_120.5 P63 BN63B4**	273
12.1	129	1.6	109.2	6200	**A203_109.2 S05 M05B4**	268	**A203_109.2 P63 BN63B4**	269
12.1	129	2.3	109.1	9600	**A303_109.1 S05 M05B4**	272	**A303_109.1 P63 BN63B4**	273
13.5	119	2.5	97.5	9600			**A302_97.5 P63 BN63B4**	273
14.3	113	1.8	92.3	6200	**A202_92.3 S05 M05B4**	268	**A202_92.3 P63 BN63B4**	269
14.4	112	0.9	91.6	4120	**A052_91.6 S05 M05B4**	261	**A052_91.6 P63 BN63B4**	261
14.4	112	1.2	91.6	5500	**A102_91.6 S05 M05B4**	264	**A102_91.6 P63 BN63B4**	265
15.2	106	3.0	86.7	9600			**A302_86.7 P63 BN63B4**	273
16.5	98	2.1	79.9	6200	**A202_79.9 S05 M05B4**	268	**A202_79.9 P63 BN63B4**	269
17.3	94	1.1	76.4	3980	**A052_76.4 S05 M05B4**	261	**A052_76.4 P63 BN63B4**	261
17.3	94	1.6	76.4	5500	**A102_76.4 S05 M05B4**	264	**A102_76.4 P63 BN63B4**	265
18.6	87	2.4	71.0	6200	**A202_71.0 S05 M05B4**	268	**A202_71.0 P63 BN63B4**	269
20.0	81	1.2	65.9	3860	**A052_65.9 S05 M05B4**	261	**A052_65.9 P63 BN63B4**	261
20.0	81	1.9	65.9	5500	**A102_65.9 S05 M05B4**	264	**A102_65.9 P63 BN63B4**	265
20.9	77	3.2	63.1	6200	**A202_63.1 S05 M05B4**	268	**A202_63.1 P63 BN63B4**	269
22.5	72	1.4	58.6	3760	**A052_58.6 S05 M05B4**	261	**A052_58.6 P63 BN63B4**	261
22.5	72	2.1	58.6	5500	**A102_58.6 S05 M05B4**	264	**A102_58.6 P63 BN63B4**	265
25.8	63	1.6	51.3	3640	**A052_51.3 S05 M05B4**	261	**A052_51.3 P63 BN63B4**	261
25.8	63	2.4	51.3	5500	**A102_51.3 S05 M05B4**	264	**A102_51.3 P63 BN63B4**	265
29.1	56	1.8	45.4	3540	**A052_45.4 S05 M05B4**	261	**A052_45.4 P63 BN63B4**	261
29.1	56	2.7	45.4	5500	**A102_45.4 S05 M05B4**	264	**A102_45.4 P63 BN63B4**	265
32	50	2.0	40.9	3440	**A052_40.9 S05 M05B4**	261	**A052_40.9 P63 BN63B4**	261
32	50	3.0	40.9	5500	**A102_40.9 S05 M05B4**	264	**A102_40.9 P63 BN63B4**	265
38	43	2.3	35.1	3310	**A052_35.1 S05 M05B4**	261	**A052_35.1 P63 BN63B4**	261
38	43	3.5	35.1	5380	**A102_35.1 S05 M05B4**	264	**A102_35.1 P63 BN63B4**	265
41	39	2.5	32.2	3240	**A052_32.2 S05 M05B4**	261	**A052_32.2 P63 BN63B4**	261
46	35	2.9	28.6	3130	**A052_28.6 S05 M05B4**	261	**A052_28.6 P63 BN63B4**	261
52	31	3.2	25.5	3040	**A052_25.5 S05 M05B4**	261	**A052_25.5 P63 BN63B4**	261
56	29	3.4	23.8	2980	**A052_23.8 S05 M05B4**	261	**A052_23.8 P63 BN63B4**	261
62	26	3.8	21.4	2890	**A052_21.4 S05 M05B4**	261	**A052_21.4 P63 BN63B4**	261
71	23	4.4	18.6	2780	**A052_18.6 S05 M05B4**	261	**A052_18.6 P63 BN63B4**	261
80	20	5.0	16.4	2680	**A052_16.4 S05 M05B4**	261	**A052_16.4 P63 BN63B4**	261
95	17.1	5.9	13.9	2550	**A052_13.9 S05 M05B4**	261	**A052_13.9 P63 BN63B4**	261
107	15.1	6.6	12.3	2460	**A052_12.3 S05 M05B4**	261	**A052_12.3 P63 BN63B4**	261
125	12.9	7.7	10.6	2350	**A052_10.6 S05 M05B4**	261	**A052_10.6 P63 BN63B4**	261
137	11.8	8.5	9.6	2280	**A052_9.6 S05 M05B4**	261	**A052_9.6 P63 BN63B4**	261
142	11.4	8.8	6.3	2300	**A052_6.3 S1 M1SC6**	261	**A052_6.3 P71 BN71A6**	261
155	10.4	9.6	8.5	2200	**A052_8.5 S05 M05B4**	261	**A052_8.5 P63 BN63B4**	261
183	8.8	11.3	7.2	2090	**A052_7.2 S05 M05B4**	261	**A052_7.2 P63 BN63B4**	261
208	7.8	12.9	6.3	2010	**A052_6.3 S05 M05B4**	261	**A052_6.3 P63 BN63B4**	261
242	6.7	14.2	5.5	1920	**A052_5.5 S05 M05B4**	261	**A052_5.5 P63 BN63B4**	261
284	5.7	16.7	9.6	1830	**A052_9.6 S05 M05A2**	261	**A052_9.6 P63 BN63A2**	261
321	5.0	17.8	8.5	1770	**A052_8.5 S05 M05A2**	261	**A052_8.5 P63 BN63A2**	261
379	4.3	19.9	7.2	1670	**A052_7.2 S05 M05A2**	261	**A052_7.2 P63 BN63A2**	261
431	3.8	21.3	6.3	1610	**A052_6.3 S05 M05A2**	261	**A052_6.3 P63 BN63A2**	261
499	3.2	23.2	5.5	1530	**A052_5.5 S05 M05A2**	261	**A052_5.5 P63 BN63A2**	261

0.25 kW

n_2 min-1	M_2 Nm	S	i	R_{n2} N	IE1		IEC IE1	
0.52	4051	1.2	1715	50000	**A704_1715 S1 M1SD6**	296	**A704_1715 P71 BN71B6**	297
0.58	3680	2.2	1558	65000	**A804_1558 S1 M1SD6**	299	**A804_1558 P71 BN71B6**	300
0.67	3165	2.5	1340	65000	**A804_1340 S1 M1SD6**	299	**A804_1340 P71 BN71B6**	300
0.80	2642	1.9	1715	50000			**A704_1715 P71 BN71A4**	297

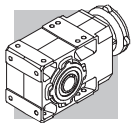

0.25 kW

n_2 min-1	M_2 Nm	S	i	R_{n2} N	IE1		IEC IE1	
0.87	2439	2.1	1583	50000			**A704_1583 P71 BN71A4**	297
0.89	2400	3.3	1558	65000			**A804_1558 P71 BN71A4**	300
1.0	2073	2.4	1346	50000			**A704_1346 P71 BN71A4**	297
1.1	1914	2.6	1242	50000			**A704_1242 P71 BN71A4**	297
1.2	1789	2.8	1161	50000			**A704_1161 P71 BN71A4**	297
1.3	1652	3.0	1072	50000			**A704_1072 P71 BN71A4**	297
1.5	1427	3.5	926.5	50000			**A704_926.5 P71 BN71A4**	297
1.8	1199	1.3	778.2	20000			**A504_778.2 P71 BN71A4**	285
1.8	1164	2.4	755.4	30000			**A604_755.4 P71 BN71A4**	293
1.9	1091	1.4	707.9	20000			**A504_707.9 P71 BN71A4**	285
2.0	1074	2.6	697.3	30000			**A604_697.3 P71 BN71A4**	293
2.2	978	2.9	634.6	30000			**A604_634.6 P71 BN71A4**	293
2.2	972	1.5	631.2	20000			**A504_631.2 P71 BN71A4**	285
2.4	902	3.1	585.8	30000			**A604_585.8 P71 BN71A4**	293
2.4	885	1.7	574.2	20000			**A504_574.2 P71 BN71A4**	285
2.5	835	3.4	542.0	30000			**A604_542.0 P71 BN71A4**	293
2.6	816	1.8	529.5	20000			**A504_529.5 P71 BN71A4**	285
2.9	742	2.0	481.6	20000			**A504_481.6 P71 BN71A4**	285
3.1	688	2.2	446.8	20000			**A504_446.8 P71 BN71A4**	285
3.4	626	2.4	406.4	20000			**A504_406.4 P71 BN71A4**	285
3.6	611	1.4	376.8	15000	**A413_376.8 S05 M05C4**	280	**A413_376.8 P71 BN71A4**	281
3.8	563	2.7	365.6	20000			**A504_365.6 P71 BN71A4**	285
3.9	550	0.9	339.3	12000	**A353_339.3 S05 M05C4**	276	**A353_339.3 P71 BN71A4**	277
4.1	526	1.6	324.2	15000	**A413_324.2 S05 M05C4**	280	**A413_324.2 P71 BN71A4**	281
4.1	512	2.9	332.6	20000			**A504_332.6 P71 BN71A4**	285
4.4	495	1.2	305.4	12000	**A353_305.4 S05 M05C4**	276	**A353_305.4 P71 BN71A4**	277
4.7	460	1.8	291.7	15000	**A413_291.7 S05 M05C4**	280	**A413_291.7 P71 BN71A4**	281
4.8	442	3.4	286.8	20000			**A504_286.8 P71 BN71A4**	285
4.9	440	0.9	271.5	9600	**A303_271.5 S05 M05C4**	272	**A303_271.5 P71 BN71A4**	273
5.0	439	1.4	270.7	12000	**A353_270.7 S05 M05C4**	276	**A353_270.7 P71 BN71A4**	277
5.1	426	2.0	262.5	15000	**A413_262.5 S05 M05C4**	280	**A413_262.5 P71 BN71A4**	281
5.4	403	1.5	248.1	12000	**A353_248.1 S05 M05C4**	276	**A353_248.1 P71 BN71A4**	277
5.6	385	1.0	244.3	9600	**A303_244.3 S05 M05C4**	272	**A303_244.3 P71 BN71A4**	273
5.7	379	2.2	240.6	15000	**A413_240.6 S05 M05C4**	280	**A413_240.6 P71 BN71A4**	281
6.0	362	1.7	223.2	12000	**A353_223.2 S05 M05C4**	276	**A353_223.2 P71 BN71A4**	277
6.2	353	2.4	217.4	15000	**A413_217.4 S05 M05C4**	280	**A413_217.4 P71 BN71A4**	281
6.2	351	1.0	216.6	9600	**A303_216.6 S05 M05C4**	272	**A303_216.6 P71 BN71A4**	273
6.6	327	1.8	201.8	12000	**A353_201.8 S05 M05C4**	276	**A353_201.8 P71 BN71A4**	277
7.0	313	1.1	198.5	9600	**A303_198.5 S05 M05C4**	272	**A303_198.5 P71 BN71A4**	273
7.0	311	2.7	197.5	15000	**A413_197.5 S05 M05C4**	280	**A413_197.5 P71 BN71A4**	281
7.1	306	2.0	188.3	12000	**A353_188.3 S05 M05C4**	276	**A353_188.3 P71 BN71A4**	277
7.3	299	2.8	184.4	15000	**A413_184.4 S05 M05C4**	280	**A413_184.4 P71 BN71A4**	281
7.5	290	1.2	178.5	9600	**A303_178.5 S05 M05C4**	272	**A303_178.5 P71 BN71A4**	273
7.8	279	2.2	171.8	12000	**A353_171.8 S05 M05C4**	276	**A353_171.8 P71 BN71A4**	277
8.4	257	0.9	163.4	6200	**A203_163.4 S05 M05C4**	268	**A203_163.4 P71 BN71A4**	269
8.5	254	1.3	161.4	9600	**A303_161.4 S05 M05C4**	272	**A303_161.4 P71 BN71A4**	273
8.9	244	1.4	150.7	9600	**A303_150.7 S05 M05C4**	272	**A303_150.7 P71 BN71A4**	273
8.9	244	2.5	150.6	12000	**A353_150.6 S05 M05C4**	276	**A353_150.6 P71 BN71A4**	277
9.2	237	1.0	146.1	6200	**A203_146.1 S05 M05C4**	268	**A203_146.1 P71 BN71A4**	269
9.8	221	2.6	136.3	12000	**A353_136.3 S05 M05C4**	276	**A353_136.3 P71 BN71A4**	277
10.0	216	1.5	137.4	9600	**A303_137.4 S05 M05C4**	272	**A303_137.4 P71 BN71A4**	273
10.7	203	1.1	129.1	6200	**A203_129.1 S05 M05C4**	268	**A203_129.1 P71 BN71A4**	269
11.1	196	1.1	120.5	6200	**A203_120.5 S05 M05C4**	268	**A203_120.5 P71 BN71A4**	269
11.1	195	1.5	120.5	9600	**A303_120.5 S05 M05C4**	272	**A303_120.5 P71 BN71A4**	273
11.5	190	3.0	116.9	12000	**A353_116.9 S05 M05C4**	276	**A353_116.9 P71 BN71A4**	277
12.6	172	1.2	109.2	6200	**A203_109.2 S05 M05C4**	268	**A203_109.2 P71 BN71A4**	269
12.7	172	1.7	109.1	9600	**A303_109.1 S05 M05C4**	272	**A303_109.1 P71 BN71A4**	273
12.7	171	3.1	105.5	12000	**A353_105.5 S05 M05C4**	276	**A353_105.5 P71 BN71A4**	277
14.2	159	1.9	97.5	9600			**A302_97.5 P71 BN71A4**	273
14.4	156	3.5	95.6	12000			**A352_95.6 P71 BN71A4**	277
14.5	155	1.3	92.3	6200	**A202_92.3 S05 M05C4**	268	**A202_92.3 P71 BN71A4**	269
15.9	141	2.3	86.7	9600			**A302_86.7 P71 BN71A4**	273
16.8	134	1.6	79.9	6200	**A202_79.9 S05 M05C4**	268	**A202_79.9 P71 BN71A4**	269
17.5	128	1.2	76.4	5500	**A102_76.4 S05 M05C4**	264	**A102_76.4 P71 BN71A4**	265
18.0	125	2.8	76.5	9600			**A302_76.5 P71 BN71A4**	273

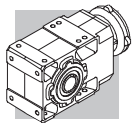

0.25 kW

n_2 min^{-1}	M_2 Nm	S	i	R_{n2} N	IE1		IEC IE1	
19.4	116	1.8	71.0	6200	**A202_71.0 S05 M05C4**	268	**A202_71.0 P71 BN71A4**	269
20.3	110	0.9	65.9	3610	**A052_65.9 S05 M05C4**	261	**A052_65.9 P71 BN71A4**	261
20.3	110	1.4	65.9	5500	**A102_65.9 S05 M05C4**	264	**A102_65.9 P71 BN71A4**	265
21.2	106	2.3	63.1	6200	**A202_63.1 S05 M05C4**	268	**A202_63.1 P71 BN71A4**	269
22.9	98	1.0	58.6	3540	**A052_58.6 S05 M05C4**	261	**A052_58.6 P71 BN71A4**	261
23.5	95	1.6	58.6	5500	**A102_58.6 S05 M05C4**	264	**A102_58.6 P71 BN71A4**	265
25.0	90	2.8	53.7	6200	**A202_53.7 S05 M05C4**	268	**A202_53.7 P71 BN71A4**	269
26.1	86	1.2	51.3	3450	**A052_51.3 S05 M05C4**	261	**A052_51.3 P71 BN71A4**	261
26.1	86	1.7	51.3	5500	**A102_51.3 S05 M05C4**	264	**A102_51.3 P71 BN71A4**	265
28.6	79	3.2	48.3	6180	**A202_48.3 S05 M05C4**	268	**A202_48.3 P71 BN71A4**	269
29.5	76	1.3	45.4	3370	**A052_45.4 S05 M05C4**	261	**A052_45.4 P71 BN71A4**	261
29.5	76	2.0	45.4	5500	**A102_45.4 S05 M05C4**	264	**A102_45.4 P71 BN71A4**	265
33	68	1.5	40.9	3290	**A052_40.9 S05 M05C4**	261	**A052_40.9 P71 BN71A4**	261
34	66	2.3	40.9	5500	**A102_40.9 S05 M05C4**	264	**A102_40.9 P71 BN71A4**	265
38	59	1.7	35.1	3180	**A052_35.1 S05 M05C4**	261	**A052_35.1 P71 BN71A4**	261
38	59	2.5	35.1	5260	**A102_35.1 S05 M05C4**	264	**A102_35.1 P71 BN71A4**	265
42	54	1.9	32.2	3120	**A052_32.2 S05 M05C4**	261	**A052_32.2 P71 BN71A4**	261
43	52	2.9	32.2	5500	**A102_32.2 S05 M05C4**	264	**A102_32.2 P71 BN71A4**	265
47	48	2.1	28.6	3030	**A052_28.6 S05 M05C4**	261	**A052_28.6 P71 BN71A4**	261
47	48	3.1	28.6	4970	**A102_28.6 S05 M05C4**	264	**A102_28.6 P71 BN71A4**	265
53	43	2.3	25.5	2940	**A052_25.5 S05 M05C4**	261	**A052_25.5 P71 BN71A4**	261
56	40	2.5	23.8	2890	**A052_23.8 S05 M05C4**	261	**A052_23.8 P71 BN71A4**	261
63	36	2.8	21.4	2810	**A052_21.4 S05 M05C4**	261	**A052_21.4 P71 BN71A4**	261
72	31	3.2	18.6	2710	**A052_18.6 S05 M05C4**	261	**A052_18.6 P71 BN71A4**	261
84	27	3.7	16.4	2620	**A052_16.4 S05 M05C4**	261	**A052_16.4 P71 BN71A4**	261
99	23	4.4	13.9	2500	**A052_13.9 S05 M05C4**	261	**A052_13.9 P71 BN71A4**	261
112	20	5.0	12.3	2420	**A052_12.3 S05 M05C4**	261	**A052_12.3 P71 BN71A4**	261
131	17.2	5.8	10.6	2310	**A052_10.6 S05 M05C4**	261	**A052_10.6 P71 BN71A4**	261
144	15.7	6.4	9.6	2260	**A052_9.6 S05 M05C4**	261	**A052_9.6 P71 BN71A4**	261
162	13.9	7.2	8.5	2180	**A052_8.5 S05 M05C4**	261	**A052_8.5 P71 BN71A4**	261
191	11.7	8.5	7.2	2070	**A052_7.2 S05 M05C4**	261	**A052_7.2 P71 BN71A4**	261
218	10.3	9.7	6.3	1990	**A052_6.3 S05 M05C4**	261	**A052_6.3 P71 BN71A4**	261
252	8.9	10.7	5.5	1900	**A052_5.5 S05 M05C4**	261	**A052_5.5 P71 BN71A4**	261
285	7.9	12.1	9.6	1820	**A052_9.6 S05 M05B2**	261	**A052_9.6 P63 BN63B2**	261
322	7.0	12.9	8.5	1750	**A052_8.5 S05 M05B2**	261	**A052_8.5 P63 BN63B2**	261
380	5.9	14.4	7.2	1660	**A052_7.2 S05 M05B2**	261	**A052_7.2 P63 BN63B2**	261
433	5.2	15.4	6.3	1590	**A052_6.3 S05 M05B2**	261	**A052_6.3 P63 BN63B2**	261
501	4.5	16.7	5.5	1520	**A052_5.5 S05 M05B2**	261	**A052_5.5 P63 BN63B2**	261

0.37 kW

n_2 min^{-1}	M_2 Nm	S	i	R_{n2} N	IE1		IEC IE1	
0.56	5644	2.5	1632	75000	**A904_1632 S1 M1LA6**	302	**A904_1632 P80 BN80A6**	303
0.63	4972	1.6	1438	65000	**A804_1438 S1 M1LA6**	299	**A804_1438 P80 BN80A6**	300
0.74	4226	3.3	1222	75000	**A904_1222 S1 M1LA6**	302	**A904_1222 P80 BN80A6**	303
0.80	3939	1.3	1715	50000	**A704_1715 S1 M1SD4**	296	**A704_1715 P71 BN71B4**	297
0.87	3636	1.4	1583	50000	**A704_1583 S1 M1SD4**	296	**A704_1583 P71 BN71B4**	297
0.88	3577	2.2	1558	65000	**A804_1558 S1 M1SD4**	299	**A804_1558 P71 BN71B4**	300
0.95	3302	2.4	1438	65000	**A804_1438 S1 M1SD4**	299	**A804_1438 P71 BN71B4**	300
1.0	3091	1.6	1346	50000	**A704_1346 S1 M1SD4**	296	**A704_1346 P71 BN71B4**	297
1.0	3077	2.6	1340	65000	**A804_1340 S1 M1SD4**	299	**A804_1340 P71 BN71B4**	300
1.1	2853	1.8	1242	50000	**A704_1242 S1 M1SD4**	296	**A704_1242 P71 BN71B4**	297
1.1	2841	2.8	1237	65000	**A804_1237 S1 M1SD4**	299	**A804_1237 P71 BN71B4**	300
1.2	2668	1.9	1161	50000	**A704_1161 S1 M1SD4**	296	**A704_1161 P71 BN71B4**	297
1.3	2492	3.2	1085	65000	**A804_1085 S1 M1SD4**	299	**A804_1085 P71 BN71B4**	300
1.3	2462	2.0	1072	50000	**A704_1072 S1 M1SD4**	296	**A704_1072 P71 BN71B4**	297
1.4	2300	3.5	1001	65000	**A804_1001 S1 M1SD4**	299	**A804_1001 P71 BN71B4**	300
1.5	2128	2.3	926.5	50000	**A704_926.5 S1 M1SD4**	296	**A704_926.5 P71 BN71B4**	297
1.6	1964	2.5	855.3	50000	**A704_855.3 S1 M1SD4**	296	**A704_855.3 P71 BN71B4**	297

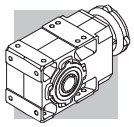

0.37 kW

n_2 min-1	M_2 Nm	S	i	R_{n2} N	IE1		IEC IE1	
1.8	1754	2.8	763.9	50000	**A704_763.9 S1 M1SD4**	296	**A704_763.9 P71 BN71B4**	297
1.8	1735	1.6	755.4	30000	**A604_755.4 S1 M1SD4**	292	**A604_755.4 P71 BN71B4**	293
1.9	1626	0.9	707.9	20000	**A504_707.9 S1 M1SD4**	284	**A504_707.9 P71 BN71B4**	285
1.9	1619	3.1	705.1	50000	**A704_705.1 S1 M1SD4**	296	**A704_705.1 P71 BN71B4**	297
2.0	1601	1.7	697.3	30000	**A604_697.3 S1 M1SD4**	292	**A604_697.3 P71 BN71B4**	293
2.1	1481	3.4	644.6	50000	**A704_644.6 S1 M1SD4**	296	**A704_644.6 P71 BN71B4**	297
2.2	1457	1.9	634.6	30000	**A604_634.6 S1 M1SD4**	292	**A604_634.6 P71 BN71B4**	293
2.2	1450	1.0	631.2	20000	**A504_631.2 S1 M1SD4**	284	**A504_631.2 P71 BN71B4**	285
2.3	1345	2.1	585.8	30000	**A604_585.8 S1 M1SD4**	292	**A604_585.8 P71 BN71B4**	293
2.4	1319	1.1	574.2	20000	**A504_574.2 S1 M1SD4**	284	**A504_574.2 P71 BN71B4**	285
2.5	1245	2.2	542.0	30000	**A604_542.0 S1 M1SD4**	292	**A604_542.0 P71 BN71B4**	293
2.6	1216	1.2	529.5	20000	**A504_529.5 S1 M1SD4**	284	**A504_529.5 P71 BN71B4**	285
2.7	1149	2.4	500.3	30000	**A604_500.3 S1 M1SD4**	292	**A604_500.3 P71 BN71B4**	293
2.8	1106	1.4	481.6	20000	**A504_481.6 S1 M1SD4**	284	**A504_481.6 P71 BN71B4**	285
3.1	1026	1.5	446.8	20000	**A504_446.8 S1 M1SD4**	284	**A504_446.8 P71 BN71B4**	285
3.1	1007	2.8	438.4	30000	**A604_438.4 S1 M1SD4**	292	**A604_438.4 P71 BN71B4**	293
3.4	933	1.6	406.4	20000	**A504_406.4 S1 M1SD4**	284	**A504_406.4 P71 BN71B4**	285
3.4	929	3.0	404.7	30000	**A604_404.7 S1 M1SD4**	292	**A604_404.7 P71 BN71B4**	293
3.6	885	1.0	376.8	15000	**A413_376.8 S1 M1SD4**	280	**A413_376.8 P71 BN71B4**	281
3.7	840	1.8	365.6	20000	**A504_365.6 S1 M1SD4**	284	**A504_365.6 P71 BN71B4**	285
3.9	807	3.5	351.2	30000	**A604_351.2 S1 M1SD4**	292	**A604_351.2 P71 BN71B4**	293
4.1	764	2.0	332.6	20000	**A504_332.6 S1 M1SD4**	284	**A504_332.6 P71 BN71B4**	285
4.2	761	1.1	324.2	15000	**A413_324.2 S1 M1SD4**	280	**A413_324.2 P71 BN71B4**	281
4.7	685	1.2	291.7	15000	**A413_291.7 S1 M1SD4**	280	**A413_291.7 P71 BN71B4**	281
4.8	659	2.3	286.8	20000	**A504_286.8 S1 M1SD4**	284	**A504_286.8 P71 BN71B4**	285
5.1	636	0.9	270.7	12000	**A353_270.7 S1 M1SD4**	276	**A353_270.7 P71 BN71B4**	277
5.2	616	1.4	262.5	15000	**A413_262.5 S1 M1SD4**	280	**A413_262.5 P71 BN71B4**	281
5.3	599	2.5	260.9	20000	**A504_260.9 S1 M1SD4**	284	**A504_260.9 P71 BN71B4**	285
5.5	583	1.0	248.1	12000	**A353_248.1 S1 M1SD4**	276	**A353_248.1 P71 BN71B4**	277
5.7	565	1.5	240.6	15000	**A413_240.6 S1 M1SD4**	280	**A413_240.6 P71 BN71B4**	281
5.9	533	2.8	232.0	20000	**A504_232.0 S1 M1SD4**	284	**A504_232.0 P71 BN71B4**	285
6.1	524	1.1	223.2	12000	**A353_223.2 S1 M1SD4**	276	**A353_223.2 P71 BN71B4**	277
6.3	511	1.7	217.4	15000	**A413_217.4 S1 M1SD4**	280	**A413_217.4 P71 BN71B4**	281
6.5	485	3.1	211.0	20000	**A504_211.0 S1 M1SD4**	284	**A504_211.0 P71 BN71B4**	285
6.8	474	1.3	201.8	12000	**A353_201.8 S1 M1SD4**	276	**A353_201.8 P71 BN71B4**	277
6.9	464	1.8	197.5	15000	**A413_197.5 S1 M1SD4**	280	**A413_197.5 P71 BN71B4**	281
7.2	448	3.4	190.6	20000	**A503_190.6 S1 M1SD4**	284	**A503_190.6 P71 BN71B4**	285
7.3	442	1.4	188.3	12000	**A353_188.3 S1 M1SD4**	276	**A353_188.3 P71 BN71B4**	277
7.4	433	2.0	184.4	15000	**A413_184.4 S1 M1SD4**	280	**A413_184.4 P71 BN71B4**	281
8.0	403	1.5	171.8	12000	**A353_171.8 S1 M1SD4**	276	**A353_171.8 P71 BN71B4**	277
9.1	354	0.9	150.7	9600	**A303_150.7 S1 M1SD4**	272	**A303_150.7 P71 BN71B4**	273
9.1	354	1.7	150.6	12000	**A353_150.6 S1 M1SD4**	276	**A353_150.6 P71 BN71B4**	277
9.3	345	2.5	146.9	15000	**A413_146.9 S1 M1SD4**	280	**A413_146.9 P71 BN71B4**	281
10.0	323	1.0	137.4	9600	**A303_137.4 S1 M1SD4**	272	**A303_137.4 P71 BN71B4**	273
10.0	320	1.8	136.3	12000	**A353_136.3 S1 M1SD4**	276	**A353_136.3 P71 BN71B4**	277
11.4	283	1.1	120.5	9600	**A303_120.5 S1 M1SD4**	272	**A303_120.5 P71 BN71B4**	273
11.7	275	2.0	116.9	12000	**A353_116.9 S1 M1SD4**	276	**A353_116.9 P71 BN71B4**	277
11.8	272	3.1	115.9	15000	**A413_115.9 S1 M1SD4**	280	**A413_115.9 P71 BN71B4**	281
12.6	256	1.2	109.1	9600	**A303_109.1 S1 M1SD4**	272	**A303_109.1 P71 BN71B4**	273
13.0	248	2.1	105.5	12000	**A353_105.5 S1 M1SD4**	276	**A353_105.5 P71 BN71B4**	277
14.1	237	1.3	97.5	9600			**A302_97.5 P71 BN71B4**	273
14.3	232	2.3	95.6	12000	**A352_95.6 S1 M1SD4**	276	**A352_95.6 P71 BN71B4**	277
15.8	210	1.5	86.7	9600			**A302_86.7 P71 BN71B4**	273
16.6	200	3.0	82.5	12000	**A352_82.5 S1 M1SD4**	276	**A352_82.5 P71 BN71B4**	277
17.2	194	1.1	79.9	6200			**A202_79.9 P71 BN71B4**	269
17.9	186	1.9	76.5	9600	**A302_76.5 S1 M1SD4**	272	**A302_76.5 P71 BN71B4**	273
18.4	180	3.3	74.3	12000	**A352_74.3 S1 M1SD4**	276	**A352_74.3 P71 BN71B4**	277
19.3	172	1.2	71.0	6200			**A202_71.0 P71 BN71B4**	269
20.7	160	2.4	66.0	9350	**A302_66.0 S1 M1SD4**	272	**A302_66.0 P71 BN71B4**	273
20.8	160	0.9	65.9	5500			**A102_65.9 P71 BN71B4**	265
21.7	153	1.6	63.1	6200	**A202_63.1 S1 M1SD4**	268	**A202_63.1 P71 BN71B4**	269
23.1	144	2.8	59.4	9080	**A302_59.4 S1 M1SD4**	272	**A302_59.4 P71 BN71B4**	273
23.4	142	1.1	58.6	5500			**A102_58.6 P71 BN71B4**	265
25.5	130	1.9	53.7	6090	**A202_53.7 S1 M1SD4**	268	**A202_53.7 P71 BN71B4**	269
26.0	128	3.2	52.7	8790	**A302_52.7 S1 M1SD4**	272	**A302_52.7 P71 BN71B4**	273

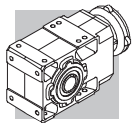

0.37 kW

n_2 min^{-1}	M_2 Nm	S	i	R_{n2} N	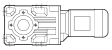 IE1		 IEC IE1	
26.7	124	1.2	51.3	5490	**A102_51.3 S1 M1SD4**	264	**A102_51.3 P71 BN71B4**	265
28.4	117	2.1	48.3	5940	**A202_48.3 S1 M1SD4**	268	**A202_48.3 P71 BN71B4**	269
28.4	117	3.5	48.3	8580	**A302_48.3 S1 M1SD4**	272	**A302_48.3 P71 BN71B4**	273
30	110	0.9	45.4	3060	**A052_45.4 S1 M1SD4**	261	**A052_45.4 P71 BN71B4**	261
30	110	1.4	45.4	5350	**A102_45.4 S1 M1SD4**	264	**A102_45.4 P71 BN71B4**	265
32	105	2.4	43.2	5780	**A202_43.2 S1 M1SD4**	268	**A202_43.2 P71 BN71B4**	269
34	99	1.0	40.9	3020	**A052_40.9 S1 M1SD4**	261	**A052_40.9 P71 BN71B4**	261
34	99	1.5	40.9	5500	**A102_40.9 S1 M1SD4**	264	**A102_40.9 P71 BN71B4**	265
35	96	2.6	39.6	5650	**A202_39.6 S1 M1SD4**	268	**A202_39.6 P71 BN71B4**	269
39	86	2.9	35.4	5480	**A202_35.4 S1 M1SD4**	268	**A202_35.4 P71 BN71B4**	269
39	85	1.2	35.1	2950	**A052_35.1 S1 M1SD4**	261	**A052_35.1 P71 BN71B4**	261
39	85	1.8	35.1	5040	**A102_35.1 S1 M1SD4**	264	**A102_35.1 P71 BN71B4**	265
43	78	1.3	32.2	2900	**A052_32.2 S1 M1SD4**	261	**A052_32.2 P71 BN71B4**	261
43	78	1.9	32.2	5500	**A102_32.2 S1 M1SD4**	264	**A102_32.2 P71 BN71B4**	265
44	76	3.3	31.3	5310	**A202_31.3 S1 M1SD4**	268	**A202_31.3 P71 BN71B4**	269
47	71	3.5	29.2	5210	**A202_29.2 S1 M1SD4**	268	**A202_29.2 P71 BN71B4**	269
48	69	1.4	28.6	2840	**A052_28.6 S1 M1SD4**	261	**A052_28.6 P71 BN71B4**	261
48	69	2.2	28.6	4790	**A102_28.6 S1 M1SD4**	264	**A102_28.6 P71 BN71B4**	265
54	62	1.6	25.5	2770	**A052_25.5 S1 M1SD4**	261	**A052_25.5 P71 BN71B4**	261
54	62	2.4	25.5	5500	**A102_25.5 S1 M1SD4**	264	**A102_25.5 P71 BN71B4**	265
58	58	1.7	23.8	2730	**A052_23.8 S1 M1SD4**	261	**A052_23.8 P71 BN71B4**	261
58	58	2.6	23.8	4570	**A102_23.8 S1 M1SD4**	264	**A102_23.8 P71 BN71B4**	265
64	52	1.9	21.4	2670	**A052_21.4 S1 M1SD4**	261	**A052_21.4 P71 BN71B4**	261
64	52	2.9	21.4	5270	**A102_21.4 S1 M1SD4**	264	**A102_21.4 P71 BN71B4**	265
74	45	2.2	18.6	2590	**A052_18.6 S1 M1SD4**	261	**A052_18.6 P71 BN71B4**	261
74	45	3.3	18.6	4270	**A102_18.6 S1 M1SD4**	264	**A102_18.6 P71 BN71B4**	265
83	40	2.5	16.4	2510	**A052_16.4 S1 M1SD4**	261	**A052_16.4 P71 BN71B4**	261
98	34	3.0	13.9	2410	**A052_13.9 S1 M1SD4**	261	**A052_13.9 P71 BN71B4**	261
111	30	3.3	12.3	2350	**A052_12.3 S1 M1SD4**	261	**A052_12.3 P71 BN71B4**	261
130	26	3.9	10.6	2240	**A052_10.6 S1 M1SD4**	261	**A052_10.6 P71 BN71B4**	261
142	23	4.3	9.6	2190	**A052_9.6 S1 M1SD4**	261	**A052_9.6 P71 BN71B4**	261
161	21	4.8	8.5	2120	**A052_8.5 S1 M1SD4**	261	**A052_8.5 P71 BN71B4**	261
190	17.5	5.7	7.2	2030	**A052_7.2 S1 M1SD4**	261	**A052_7.2 P71 BN71B4**	261
216	15.4	6.5	6.3	1950	**A052_6.3 S1 M1SD4**	261	**A052_6.3 P71 BN71B4**	261
228	14.6	6.8	12.3	1920	**A052_12.3 S05 M05C2**	261	**A052_12.3 P71 BN71A2**	261
251	13.3	7.2	5.5	1870	**A052_5.5 S1 M1SD4**	261	**A052_5.5 P71 BN71B4**	261
265	12.5	6.4	10.6	1830	**A052_10.6 S05 M05C2**	261	**A052_10.6 P71 BN71A2**	261
291	11.4	8.3	9.6	1790	**A052_9.6 S05 M05C2**	261	**A052_9.6 P71 BN71A2**	261
331	10.0	9.0	8.5	1720	**A052_8.5 S05 M05C2**	261	**A052_8.5 P71 BN71A2**	261
388	8.6	9.9	7.2	1640	**A052_7.2 S05 M05C2**	261	**A052_7.2 P71 BN71A2**	261
445	7.5	10.7	6.3	1570	**A052_6.3 S05 M05C2**	261	**A052_6.3 P71 BN71A2**	261
512	6.5	11.6	5.5	1500	**A052_5.5 S05 M05C2**	261		

0.55 kW

n_2 min^{-1}	M_2 Nm	S	i	R_{n2} N	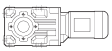 IE1		 IEC IE1	
0.56	8299	1.7	1632	75000	**A904_1632 S2 M2SA6**	302	**A904_1632 P80 BN80B6**	303
0.64	7310	1.1	1438	65000	**A804_1438 S2 M2SA6**	299	**A804_1438 P80 BN80B6**	300
0.75	6213	2.3	1222	75000	**A904_1222 S2 M2SA6**	302	**A904_1222 P80 BN80B6**	303
0.80	5813	0.9	1715	50000	**A704_1715 S1 M1LA4**	296	**A704_1715 P80 BN80A4**	297
0.85	5532	2.5	1632	75000	**A904_1632 S1 M1LA4**	302	**A904_1632 P80 BN80A4**	303
0.87	5365	0.9	1583	50000	**A704_1583 S1 M1LA4**	296	**A704_1583 P80 BN80A4**	297
0.89	5279	1.5	1558	65000	**A804_1558 S1 M1LA4**	299	**A804_1558 P80 BN80A4**	300
0.92	5070	2.8	1507	75000	**A904_1507 S1 M1LA4**	302	**A904_1507 P80 BN80A4**	303
0.96	4873	1.6	1438	65000	**A804_1438 S1 M1LA4**	299	**A804_1438 P80 BN80A4**	300
1.0	4561	1.1	1346	50000	**A704_1346 S1 M1LA4**	296	**A704_1346 P80 BN80A4**	297
1.0	4541	1.8	1340	65000	**A804_1340 S1 M1LA4**	299	**A804_1340 P80 BN80A4**	300
1.0	4455	3.1	1324	75000	**A904_1324 S1 M1LA4**	302	**A904_1324 P80 BN80A4**	303
1.1	4211	1.2	1242	50000	**A704_1242 S1 M1LA4**	296	**A704_1242 P80 BN80A4**	297

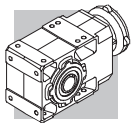

0.55 kW

n_2 min-1	M_2 Nm	S	i	R_{n2} N	IE1		IEC IE1	
1.1	4192	1.9	1237	65000	**A804_1237 S1 M1LA4**	299	**A804_1237 P80 BN80A4**	300
1.1	4112	3.4	1222	75000	**A904_1222 S1 M1LA4**	302	**A904_1222 P80 BN80A4**	303
1.2	3937	1.3	1161	50000	**A704_1161 S1 M1LA4**	296	**A704_1161 P80 BN80A4**	297
1.3	3677	2.2	1085	65000	**A804_1085 S1 M1LA4**	299	**A804_1085 P80 BN80A4**	300
1.3	3634	1.4	1072	50000	**A704_1072 S1 M1LA4**	296	**A704_1072 P80 BN80A4**	297
1.4	3394	2.4	1001	65000	**A804_1001 S1 M1LA4**	299	**A804_1001 P80 BN80A4**	300
1.5	3140	1.6	926.5	50000	**A704_926.5 S1 M1LA4**	296	**A704_926.5 P80 BN80A4**	297
1.5	3046	2.6	898.7	65000	**A804_898.7 S1 M1LA4**	299	**A804_898.7 P80 BN80A4**	300
1.6	2899	1.7	855.3	50000	**A704_855.3 S1 M1LA4**	296	**A704_855.3 P80 BN80A4**	297
1.7	2811	2.8	829.5	65000	**A804_829.5 S1 M1LA4**	299	**A804_829.5 P80 BN80A4**	300
1.8	2589	1.9	763.9	50000	**A704_763.9 S1 M1LA4**	296	**A704_763.9 P80 BN80A4**	297
1.8	2583	3.1	762.1	65000	**A804_762.1 S1 M1LA4**	299	**A804_762.1 P80 BN80A4**	300
1.8	2560	1.1	755.4	30000	**A604_755.4 S1 M1LA4**	292	**A604_755.4 P80 BN80A4**	293
2.0	2390	2.1	705.1	50000	**A704_705.1 S1 M1LA4**	296	**A704_705.1 P80 BN80A4**	297
2.0	2384	3.4	703.5	65000	**A804_703.5 S1 M1LA4**	299	**A804_703.5 P80 BN80A4**	300
2.0	2363	1.2	697.3	30000	**A604_697.3 S1 M1LA4**	292	**A604_697.3 P80 BN80A4**	293
2.1	2185	2.3	644.6	50000	**A704_644.6 S1 M1LA4**	296	**A704_644.6 P80 BN80A4**	297
2.2	2151	1.3	634.6	30000	**A604_634.6 S1 M1LA4**	292	**A604_634.6 P80 BN80A4**	293
2.3	2017	2.5	595.0	50000	**A704_595.0 S1 M1LA4**	296	**A704_595.0 P80 BN80A4**	297
2.4	1985	1.4	585.8	30000	**A604_585.8 S1 M1LA4**	292	**A604_585.8 P80 BN80A4**	293
2.5	1837	1.5	542.0	30000	**A604_542.0 S1 M1LA4**	292	**A604_542.0 P80 BN80A4**	293
2.7	1747	2.9	515.4	50000	**A704_515.4 S1 M1LA4**	296	**A704_515.4 P80 BN80A4**	297
2.8	1696	1.7	500.3	30000	**A604_500.3 S1 M1LA4**	292	**A604_500.3 P80 BN80A4**	293
2.9	1632	0.9	481.6	20000	**A504_481.6 S1 M1LA4**	284	**A504_481.6 P80 BN80A4**	285
2.9	1612	3.1	475.8	50000	**A704_475.8 S1 M1LA4**	296	**A704_475.8 P80 BN80A4**	297
3.1	1514	1.0	446.8	20000	**A504_446.8 S1 M1LA4**	284	**A504_446.8 P80 BN80A4**	285
3.1	1486	1.9	438.4	30000	**A604_438.4 S1 M1LA4**	292	**A604_438.4 P80 BN80A4**	293
3.4	1378	1.1	406.4	20000	**A504_406.4 S1 M1LA4**	284	**A504_406.4 P80 BN80A4**	285
3.4	1372	2.0	404.7	30000	**A604_404.7 S1 M1LA4**	292	**A604_404.7 P80 BN80A4**	293
3.8	1239	1.2	365.6	20000	**A504_365.6 S1 M1LA4**	284	**A504_365.6 P80 BN80A4**	285
3.9	1190	2.4	351.2	30000	**A604_351.2 S1 M1LA4**	292	**A604_351.2 P80 BN80A4**	293
4.1	1127	1.3	332.6	20000	**A504_332.6 S1 M1LA4**	284	**A504_332.6 P80 BN80A4**	285
4.3	1099	2.5	324.2	30000	**A604_324.2 S1 M1LA4**	292	**A604_324.2 P80 BN80A4**	293
4.8	972	1.5	286.8	20000	**A504_286.8 S1 M1LA4**	284	**A504_286.8 P80 BN80A4**	285
4.8	970	2.9	286.3	30000	**A604_286.3 S1 M1LA4**	292	**A604_286.3 P80 BN80A4**	293
5.2	896	3.1	264.3	30000	**A604_264.3 S1 M1LA4**	292	**A604_264.3 P80 BN80A4**	293
5.3	910	0.9	262.5	15000	**A413_262.5 S1 M1LA4**	280	**A413_262.5 P80 BN80A4**	281
5.3	884	1.7	260.9	20000	**A504_260.9 S1 M1LA4**	284	**A504_260.9 P80 BN80A4**	285
5.7	834	1.0	240.6	15000	**A413_240.6 S1 M1LA4**	280	**A413_240.6 P80 BN80A4**	281
5.9	786	1.9	232.0	20000	**A504_232.0 S1 M1LA4**	284	**A504_232.0 P80 BN80A4**	285
6.3	753	1.1	217.4	15000	**A413_217.4 S1 M1LA4**	280	**A413_217.4 P80 BN80A4**	281
6.5	715	2.1	211.0	20000	**A504_211.0 S1 M1LA4**	284	**A504_211.0 P80 BN80A4**	285
7.0	685	1.2	197.5	15000	**A413_197.5 S1 M1LA4**	280	**A413_197.5 P80 BN80A4**	281
7.1	673	3.0	194.2	30000	**A553_194.2 S1 M1LA4**	288	**A553_194.2 P80 BN80A4**	289
7.2	660	2.3	190.6	20000	**A503_190.6 S1 M1LA4**	284	**A503_190.6 P80 BN80A4**	285
7.3	653	0.9	188.3	12000	**A353_188.3 S1 M1LA4**	276	**A353_188.3 P80 BN80A4**	277
7.5	639	1.3	184.4	15000	**A413_184.4 S1 M1LA4**	280	**A413_184.4 P80 BN80A4**	281
7.9	607	3.3	175.0	30000	**A553_175.0 S1 M1LA4**	288	**A553_175.0 P80 BN80A4**	289
8.0	601	2.5	173.4	20000	**A503_173.4 S1 M1LA4**	284	**A503_173.4 P80 BN80A4**	285
8.0	595	1.0	171.8	12000	**A353_171.8 S1 M1LA4**	276	**A353_171.8 P80 BN80A4**	277
9.0	532	2.8	154.6	20000	**A503_154.6 S1 M1LA4**	284	**A503_154.6 P80 BN80A4**	285
9.2	522	1.1	150.6	12000	**A353_150.6 S1 M1LA4**	276	**A353_150.6 P80 BN80A4**	277
9.4	509	1.7	146.9	15000	**A413_146.9 S1 M1LA4**	280	**A413_146.9 P80 BN80A4**	281
9.9	484	3.1	140.6	20000	**A503_140.6 S1 M1LA4**	284	**A503_140.6 P80 BN80A4**	285
10.1	472	1.2	136.3	12000	**A353_136.3 S1 M1LA4**	276	**A353_136.3 P80 BN80A4**	277
10.7	446	3.4	129.7	20000	**A503_129.7 S1 M1LA4**	284	**A503_129.7 P80 BN80A4**	285
11.8	405	1.4	116.9	12000	**A353_116.9 S1 M1LA4**	276	**A353_116.9 P80 BN80A4**	277
11.9	402	2.1	115.9	15000	**A413_115.9 S1 M1LA4**	280	**A413_115.9 P80 BN80A4**	281
13.1	366	1.4	105.5	12000	**A353_105.5 S1 M1LA4**	276	**A353_105.5 P80 BN80A4**	277
14.2	349	0.9	97.5	9600			**A302_97.5 P80 BN80A4**	273
14.4	342	1.6	95.6	12000	**A352_95.6 S1 M1LA4**	276	**A352_95.6 P80 BN80A4**	277
14.9	321	2.5	92.8	15000	**A413_92.8 S1 M1LA4**	280	**A413_92.8 P80 BN80A4**	281
15.9	310	1.0	86.7	9420			**A302_86.7 P80 BN80A4**	273
16.7	295	2.0	82.5	12000	**A352_82.5 S1 M1LA4**	276	**A352_82.5 P80 BN80A4**	277
17.4	284	3.0	79.2	15000	**A412_79.2 S1 M1LA4**	280	**A412_79.2 P80 BN80A4**	281

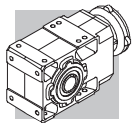

0.55 kW

n_2 min-1	M_2 Nm	S	i	R_{n2} N	IE1		IEC IE1	
18.0	274	1.3	76.5	9180	**A302_76.5 S1 M1LA4**	272	**A302_76.5 P80 BN80A4**	273
18.6	266	2.3	74.3	12000	**A352_74.3 S1 M1LA4**	276	**A352_74.3 P80 BN80A4**	277
19.4	255	3.3	71.3	15000	**A412_71.3 S1 M1LA4**	280	**A412_71.3 P80 BN80A4**	281
20.9	236	1.6	66.0	8880	**A302_66.0 S1 M1LA4**	272	**A302_66.0 P80 BN80A4**	273
21.0	236	2.5	65.8	12000	**A352_65.8 S1 M1LA4**	276	**A352_65.8 P80 BN80A4**	277
21.9	226	1.1	63.1	5840	**A202_63.1 S1 M1LA4**	268	**A202_63.1 P80 BN80A4**	269
22.9	216	2.8	60.4	12000	**A352_60.4 S1 M1LA4**	276	**A352_60.4 P80 BN80A4**	277
23.2	213	1.9	59.4	8660	**A302_59.4 S1 M1LA4**	272	**A302_59.4 P80 BN80A4**	273
25.4	194	3.1	54.3	12000	**A352_54.3 S1 M1LA4**	276	**A352_54.3 P80 BN80A4**	277
25.7	192	1.3	53.7	5670	**A202_53.7 S1 M1LA4**	268	**A202_53.7 P80 BN80A4**	269
26.2	189	2.2	52.7	8410	**A302_52.7 S1 M1LA4**	272	**A302_52.7 P80 BN80A4**	273
28.1	176	3.4	49.1	12000	**A352_49.1 S1 M1LA4**	276	**A352_49.1 P80 BN80A4**	277
28.6	173	1.4	48.3	5560	**A202_48.3 S1 M1LA4**	268	**A202_48.3 P80 BN80A4**	269
28.6	173	2.4	48.3	8230	**A302_48.3 S1 M1LA4**	272	**A302_48.3 P80 BN80A4**	273
30	163	0.9	45.4	4910	**A102_45.4 S1 M1LA4**	264	**A102_45.4 P80 BN80A4**	265
32	155	2.6	43.4	8010	**A302_43.4 S1 M1LA4**	272	**A302_43.4 P80 BN80A4**	273
32	155	1.6	43.2	5440	**A202_43.2 S1 M1LA4**	268	**A202_43.2 P80 BN80A4**	269
34	146	1.0	40.9	5500	**A102_40.9 S1 M1LA4**	264	**A102_40.9 P80 BN80A4**	265
35	142	1.8	39.6	5340	**A202_39.6 S1 M1LA4**	268	**A202_39.6 P80 BN80A4**	269
35	141	2.9	39.3	7800	**A302_39.3 S1 M1LA4**	272	**A302_39.3 P80 BN80A4**	273
38	131	3.1	36.6	7660	**A302_36.6 S1 M1LA4**	272	**A302_36.6 P80 BN80A4**	273
39	127	2.0	35.4	5200	**A202_35.4 S1 M1LA4**	268	**A202_35.4 P80 BN80A4**	269
39	126	1.2	35.1	4700	**A102_35.1 S1 M1LA4**	264	**A102_35.1 P80 BN80A4**	265
41	120	3.4	33.4	7480	**A302_33.4 S1 M1LA4**	272	**A302_33.4 P80 BN80A4**	273
43	115	1.3	32.2	5490	**A102_32.2 S1 M1LA4**	264	**A102_32.2 P80 BN80A4**	265
44	112	2.2	31.3	5060	**A202_31.3 S1 M1LA4**	268	**A202_31.3 P80 BN80A4**	269
47	105	2.4	29.2	4970	**A202_29.2 S1 M1LA4**	268	**A202_29.2 P80 BN80A4**	269
48	102	1.0	28.6	2550	**A052_28.6 S1 M1LA4**	261	**A052_28.6 P80 BN80A4**	261
48	102	1.5	28.6	4510	**A102_28.6 S1 M1LA4**	264	**A102_28.6 P80 BN80A4**	265
52	95	2.6	26.5	4850	**A202_26.5 S1 M1LA4**	268	**A202_26.5 P80 BN80A4**	269
54	91	1.1	25.5	2510	**A052_25.5 S1 M1LA4**	261	**A052_25.5 P80 BN80A4**	261
54	91	1.6	25.5	5230	**A102_25.5 S1 M1LA4**	264	**A102_25.5 P80 BN80A4**	265
58	85	1.2	23.8	2490	**A052_23.8 S1 M1LA4**	261	**A052_23.8 P80 BN80A4**	261
58	85	1.8	23.8	4330	**A102_23.8 S1 M1LA4**	264	**A102_23.8 P80 BN80A4**	265
60	83	3.0	23.1	4690	**A202_23.1 S1 M1LA4**	268	**A202_23.1 P80 BN80A4**	269
65	76	1.3	21.4	2450	**A052_21.4 S1 M1LA4**	261	**A052_21.4 P80 BN80A4**	261
65	76	2.0	21.4	5020	**A102_21.4 S1 M1LA4**	264	**A102_21.4 P80 BN80A4**	265
65	76	3.3	21.2	4590	**A202_21.2 S1 M1LA4**	268	**A202_21.2 P80 BN80A4**	269
74	66	1.5	18.6	2400	**A052_18.6 S1 M1LA4**	261	**A052_18.6 P80 BN80A4**	261
74	66	2.3	18.6	4090	**A102_18.6 S1 M1LA4**	264	**A102_18.6 P80 BN80A4**	265
84	59	1.7	16.4	2340	**A052_16.4 S1 M1LA4**	261	**A052_16.4 P80 BN80A4**	261
84	59	2.5	16.4	4710	**A102_16.4 S1 M1LA4**	264	**A102_16.4 P80 BN80A4**	265
99	50	2.0	13.9	2270	**A052_13.9 S1 M1LA4**	261	**A052_13.9 P80 BN80A4**	261
99	50	3.0	13.9	3800	**A102_13.9 S1 M1LA4**	264	**A102_13.9 P80 BN80A4**	265
112	44	2.3	12.3	2220	**A052_12.3 S1 M1LA4**	261	**A052_12.3 P80 BN80A4**	261
112	44	3.2	12.3	3670	**A102_12.3 S1 M1LA4**	264	**A102_12.3 P80 BN80A4**	265
131	38	2.6	10.6	2130	**A052_10.6 S1 M1LA4**	261	**A052_10.6 P80 BN80A4**	261
144	34	2.9	9.6	2100	**A052_9.6 S1 M1LA4**	261	**A052_9.6 P80 BN80A4**	261
162	30	3.3	8.5	2030	**A052_8.5 S1 M1LA4**	261	**A052_8.5 P80 BN80A4**	261
171	29	3.1	16.4	2000	**A052_16.4 S1 M1SD2**	261	**A052_16.4 P71 BN71B2**	261
191	26	3.9	7.2	1950	**A052_7.2 S1 M1LA4**	261	**A052_7.2 P80 BN80A4**	261
218	23	4.4	6.3	1880	**A052_6.3 S1 M1LA4**	261	**A052_6.3 P80 BN80A4**	261
229	22	4.6	12.3	1860	**A052_12.3 S1 M1SD2**	261	**A052_12.3 P71 BN71B2**	261
252	19.6	4.9	5.5	1810	**A052_5.5 S1 M1LA4**	261	**A052_5.5 P80 BN80A4**	261
267	18.5	4.3	10.6	1780	**A052_10.6 S1 M1SD2**	261	**A052_10.6 P71 BN71B2**	261
293	16.8	5.6	9.6	1740	**A052_9.6 S1 M1SD2**	261	**A052_9.6 P71 BN71B2**	261
331	14.9	6.0	8.5	1680	**A052_8.5 S1 M1SD2**	261	**A052_8.5 P71 BN71B2**	261
391	12.6	6.7	7.2	1600	**A052_7.2 S1 M1SD2**	261	**A052_7.2 P71 BN71B2**	261
445	11.1	7.2	6.3	1540	**A052_6.3 S1 M1SD2**	261	**A052_6.3 P71 BN71B2**	261
516	9.6	7.8	5.5	1480	**A052_5.5 S1 M1SD2**	261	**A052_5.5 P71 BN71B2**	261

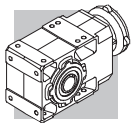

0.75 kW

n_2 min-1	M_2 Nm	S	i	R_{n2} N	IE2	IE3		IEC IE2	IEC IE3	
0.58	11068	1.3	1632	75000	**A904_1632 S3 ME3SA6**		302	**A904_ 1632 P90 BE90S6**		303
0.62	10220	1.4	1507	75000	**A904_1507 S3 ME3SA6**		302	**A904_ 1507 P90 BE90S6**		303
0.71	8979	1.6	1324	75000	**A904_1324 S3 ME3SA6**		302	**A904_ 1324 P90 BE90S6**		303
0.77	8287	1.7	1222	75000	**A904_1222 S3 ME3SA6**		302	**A904_ 1222 P90 BE90S6**		303
0.88	7264	1.9	1632	75000	**A904_1632 S2 ME2SB4**	**A904_1632 S2 MX2SB4**	302	**A904_1632 P80 BE80B4**	**A904_1632 P80 BX80B4**	303
0.92	6932	1.2	1558	65000	**A804_1558 S2 ME2SB4**	**A804_1558 S2 MX2SB4**	299	**A804_1558 P80 BE80B4**	**A804_1558 P80 BX80B4**	300
0.95	6705	2.1	1507	75000	**A904_1507 S2 ME2SB4**	**A904_1507 S2 MX2SB4**	302	**A904_1507 P80 BE80B4**	**A904_1507 P80 BX80B4**	303
0.99	6398	1.3	1438	65000	**A804_1438 S2 ME2SB4**	**A804_1438 S2 MX2SB4**	299	**A804_1438 P80 BE80B4**	**A804_1438 P80 BX80B4**	300
1.1	5963	1.3	1340	65000	**A804_1340 S2 ME2SB4**	**A804_1340 S2 MX2SB4**	299	**A804_1340 P80 BE80B4**	**A804_1340 P80 BX80B4**	300
1.1	5892	2.4	1324	75000	**A904_1324 S2 ME2SB4**	**A904_1324 S2 MX2SB4**	302	**A904_1324 P80 BE80B4**	**A904_1324 P80 BX80B4**	303
1.2	5528	0.9	1242	50000	**A704_1242 S2 ME2SB4**	**A704_1242 S2 MX2SB4**	296	**A704_1242 P80 BE80B4**	**A704_1242 P80 BX80B4**	297
1.2	5504	1.5	1237	65000	**A804_1237 S2 ME2SB4**	**A804_1237 S2 MX2SB4**	299	**A804_1237 P80 BE80B4**	**A804_1237 P80 BX80B4**	300
1.2	5439	2.6	1222	75000	**A904_1222 S2 ME2SB4**	**A904_1222 S2 MX2SB4**	302	**A904_1222 P80 BE80B4**	**A904_1222 P80 BX80B4**	303
1.2	5169	1.0	1161	50000	**A704_1161 S2 ME2SB4**	**A704_1161 S2 MX2SB4**	296	**A704_1161 P80 BE80B4**	**A704_1161 P80 BX80B4**	297
1.3	4942	2.8	1111	75000	**A904_1111 S2 ME2SB4**	**A904_1111 S2 MX2SB4**	302	**A904_1111 P80 BE80B4**	**A904_1111 P80 BX80B4**	303
1.3	4828	1.7	1085	65000	**A804_1085 S2 ME2SB4**	**A804_1085 S2 MX2SB4**	299	**A804_1085 P80 BE80B4**	**A804_1085 P80 BX80B4**	300
1.3	4771	1.0	1072	50000	**A704_1072 S2 ME2SB4**	**A704_1072 S2 MX2SB4**	296	**A704_1072 P80 BE80B4**	**A704_1072 P80 BX80B4**	297
1.4	4562	3.1	1025	75000	**A904_1025 S2 ME2SB4**	**A904_1025 S2 MX2SB4**	302	**A904_1025 P80 BE80B4**	**A904_1025 P80 BX80B4**	303
1.4	4456	1.8	1001	65000	**A804_1001 S2 ME2SB4**	**A804_1001 S2 MX2SB4**	299	**A804_1001 P80 BE80B4**	**A804_1001 P80 BX80B4**	300
1.5	4170	3.4	937.2	75000	**A904_937.2 S2 ME2SB4**	**A904_937.2 S2 MX2SB4**	302	**A904_937.2 P80 BE80B4**	**A904_937.2 P80 BX80B4**	303
1.5	4123	1.2	926.5	50000	**A704_926.5 S2 ME2SB4**	**A704_926.5 S2 MX2SB4**	296	**A704_926.5 P80 BE80B4**	**A704_926.5 P80 BX80B4**	297
1.6	3999	2.0	898.7	65000	**A804_898.7 S2 ME2SB4**	**A804_898.7 S2 MX2SB4**	299	**A804_898.7 P80 BE80B4**	**A804_898.7 P80 BX80B4**	300
1.7	3806	1.3	855.3	50000	**A704_855.3 S2 ME2SB4**	**A704_855.3 S2 MX2SB4**	296	**A704_855.3 P80 BE80B4**	**A704_855.3 P80 BX80B4**	297
1.7	3691	2.2	829.5	65000	**A804_829.5 S2 ME2SB4**	**A804_829.5 S2 MX2SB4**	299	**A804_829.5 P80 BE80B4**	**A804_829.5 P80 BX80B4**	300
1.9	3399	1.5	763.9	50000	**A704_763.9 S2 ME2SB4**	**A704_763.9 S2 MX2SB4**	296	**A704_763.9 P80 BE80B4**	**A704_763.9 P80 BX80B4**	297
1.9	3391	2.4	762.1	65000	**A804_762.1 S2 ME2SB4**	**A804_762.1 S2 MX2SB4**	299	**A804_762.1 P80 BE80B4**	**A804_762.1 P80 BX80B4**	300
2.0	3138	1.6	705.1	50000	**A704_705.1 S2 ME2SB4**	**A704_705.1 S2 MX2SB4**	296	**A704_705.1 P80 BE80B4**	**A704_705.1 P80 BX80B4**	297
2.0	3130	2.6	703.5	65000	**A804_703.5 S2 ME2SB4**	**A804_703.5 S2 MX2SB4**	299	**A804_703.5 P80 BE80B4**	**A804_703.5 P80 BX80B4**	300
2.1	3103	0.9	697.3	30000	**A604_697.3 S2 ME2SB4**	**A604_697.3 S2 MX2SB4**	292	**A604_697.3 P80 BE80B4**	**A604_697.3 P80 BX80B4**	293
2.2	2869	1.7	644.6	50000	**A704_644.6 S2 ME2SB4**	**A704_644.6 S2 MX2SB4**	296	**A704_644.6 P80 BE80B4**	**A704_644.6 P80 BX80B4**	297
2.3	2824	1.0	634.6	30000	**A604_634.6 S2 ME2SB4**	**A604_634.6 S2 MX2SB4**	292	**A604_634.6 P80 BE80B4**	**A604_634.6 P80 BX80B4**	293
2.4	2702	3.0	607.2	65000	**A804_607.2 S2 ME2SB4**	**A804_607.2 S2 MX2SB4**	299	**A804_607.2 P80 BE80B4**	**A804_607.2 P80 BX80B4**	300
2.4	2648	1.9	595.0	50000	**A704_595.0 S2 ME2SB4**	**A704_595.0 S2 MX2SB4**	296	**A704_595.0 P80 BE80B4**	**A704_595.0 P80 BX80B4**	297
2.4	2607	1.1	585.8	30000	**A604_585.8 S2 ME2SB4**	**A604_585.8 S2 MX2SB4**	292	**A604_585.8 P80 BE80B4**	**A604_585.8 P80 BX80B4**	293
2.6	2494	3.2	560.5	65000	**A804_560.5 S2 ME2SB4**	**A804_560.5 S2 MX2SB4**	299	**A804_560.5 P80 BE80B4**	**A804_560.5 P80 BX80B4**	300
2.6	2412	1.2	542.0	30000	**A604_542.0 S2 ME2SB4**	**A604_542.0 S2 MX2SB4**	292	**A604_542.0 P80 BE80B4**	**A604_542.0 P80 BX80B4**	293
2.8	2294	2.2	515.4	50000	**A704_515.4 S2 ME2SB4**	**A704_515.4 S2 MX2SB4**	296	**A704_515.4 P80 BE80B4**	**A704_515.4 P80 BX80B4**	297
2.9	2226	1.3	500.3	30000	**A604_500.3 S2 ME2SB4**	**A604_500.3 S2 MX2SB4**	292	**A604_500.3 P80 BE80B4**	**A604_500.3 P80 BX80B4**	293
3.0	2117	2.4	475.8	50000	**A704_475.8 S2 ME2SB4**	**A704_475.8 S2 MX2SB4**	296	**A704_475.8 P80 BE80B4**	**A704_475.8 P80 BX80B4**	297
3.3	1951	1.4	438.4	30000	**A604_438.4 S2 ME2SB4**	**A604_438.4 S2 MX2SB4**	292	**A604_438.4 P80 BE80B4**	**A604_438.4 P80 BX80B4**	293
3.5	1842	1.1	414.0	30000	**A554_414.0 S2 ME2SB4**	**A554_414.0 S2 MX2SB4**	288	**A554_414.0 P80 BE80B4**	**A554_414.0 P80 BX80B4**	289
3.5	1801	1.6	404.7	30000	**A604_404.7 S2 ME2SB4**	**A604_404.7 S2 MX2SB4**	292	**A604_404.7 P80 BE80B4**	**A604_404.7 P80 BX80B4**	293
3.6	1781	2.8	400.2	50000	**A704_400.2 S2 ME2SB4**	**A704_400.2 S2 MX2SB4**	296	**A704_400.2 P80 BE80B4**	**A704_400.2 P80 BX80B4**	297
3.9	1644	3.0	369.4	50000	**A704_369.4 S2 ME2SB4**	**A704_369.4 S2 MX2SB4**	296	**A704_369.4 P80 BE80B4**	**A704_369.4 P80 BX80B4**	297
3.9	1627	0.9	365.6	20000	**A504_365.6 S2 ME2SB4**	**A504_365.6 S2 MX2SB4**	284	**A504_365.6 P80 BE80B4**	**A504_365.6 P80 BX80B4**	285
4.1	1563	1.8	351.2	30000	**A604_351.2 S2 ME2SB4**	**A604_351.2 S2 MX2SB4**	292	**A604_351.2 P80 BE80B4**	**A604_351.2 P80 BX80B4**	293
4.3	1480	1.0	332.6	20000	**A504_332.6 S2 ME2SB4**	**A504_332.6 S2 MX2SB4**	284	**A504_332.6 P80 BE80B4**	**A504_332.6 P80 BX80B4**	285
4.4	1445	1.4	324.7	30000	**A554_324.7 S2 ME2SB4**	**A554_324.7 S2 MX2SB4**	288	**A554_324.7 P80 BE80B4**	**A554_324.7 P80 BX80B4**	289
4.4	1443	1.9	324.2	30000	**A604_324.2 S2 ME2SB4**	**A604_324.2 S2 MX2SB4**	292	**A604_324.2 P80 BE80B4**	**A604_324.2 P80 BX80B4**	293
4.5	1408	3.6	316.4	50000	**A704_316.4 S2 ME2SB4**	**A704_316.4 S2 MX2SB4**	296	**A704_316.4 P80 BE80B4**	**A704_316.4 P80 BX80B4**	297
5.0	1276	1.2	286.8	20000	**A504_286.8 S2 ME2SB4**	**A504_286.8 S2 MX2SB4**	284	**A504_286.8 P80 BE80B4**	**A504_286.8 P80 BX80B4**	285
5.0	1274	2.2	286.3	30000	**A604_286.3 S2 ME2SB4**	**A604_286.3 S2 MX2SB4**	292	**A604_286.3 P80 BE80B4**	**A604_286.3 P80 BX80B4**	293
5.4	1176	2.4	264.3	30000	**A604_264.3 S2 ME2SB4**	**A604_264.3 S2 MX2SB4**	292	**A604_264.3 P80 BE80B4**	**A604_264.3 P80 BX80B4**	293
5.4	1169	1.7	262.6	30000	**A554_262.6 S2 ME2SB4**	**A554_262.6 S2 MX2SB4**	288	**A554_262.6 P80 BE80B4**	**A554_262.6 P80 BX80B4**	289
5.5	1161	1.3	260.9	20000	**A504_260.9 S2 ME2SB4**	**A504_260.9 S2 MX2SB4**	284	**A504_260.9 P80 BE80B4**	**A504_260.9 P80 BX80B4**	285
6.2	1032	1.5	232.0	20000	**A504_232.0 S2 ME2SB4**	**A504_232.0 S2 MX2SB4**	284	**A504_232.0 P80 BE80B4**	**A504_232.0 P80 BX80B4**	285
6.3	1006	2.8	226.1	30000	**A604_226.1 S2 ME2SB4**	**A604_226.1 S2 MX2SB4**	292	**A604_226.1 P80 BE80B4**	**A604_226.1 P80 BX80B4**	293
6.8	939	1.6	211.0	20000	**A504_211.0 S2 ME2SB4**	**A504_211.0 S2 MX2SB4**	284	**A504_211.0 P80 BE80B4**	**A504_211.0 P80 BX80B4**	285
6.9	929	3.0	208.7	30000	**A604_208.7 S2 ME2SB4**	**A604_208.7 S2 MX2SB4**	292	**A604_208.7 P80 BE80B4**	**A604_208.7 P80 BX80B4**	293
6.9	926	2.1	208.1	30000	**A554_208.1 S2 ME2SB4**	**A554_208.1 S2 MX2SB4**	288	**A554_208.1 P80 BE80B4**	**A554_208.1 P80 BX80B4**	289
7.2	899	0.9	197.5	15000	**A413_197.5 S2 ME2SB4**	**A413_197.5 S2 MX2SB4**	280	**A413_197.5 P80 BE80B4**	**A413_197.5 P80 BX80B4**	281
7.4	884	2.3	194.2	30000	**A553_194.2 S2 ME2SB4**	**A553_194.2 S2 MX2SB4**	288	**A553_194.2 P80 BE80B4**	**A553_194.2 P80 BX80B4**	289
7.5	867	1.7	190.6	20000	**A503_190.6 S2 ME2SB4**	**A503_190.6 S2 MX2SB4**	284	**A503_190.6 P80 BE80B4**	**A503_190.6 P80 BX80B4**	285
7.7	845	3.3	185.8	30000	**A603_185.8 S2 ME2SB4**	**A603_185.8 S2 MX2SB4**	292	**A603_185.8 P80 BE80B4**	**A603_185.8 P80 BX80B4**	293
7.8	839	1.0	184.4	15000	**A413_184.4 S2 ME2SB4**	**A413_184.4 S2 MX2SB4**	280	**A413_184.4 P80 BE80B4**	**A413_184.4 P80 BX80B4**	281

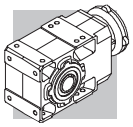

0.75 kW

n_2 min-1	M_2 Nm	S	i	R_{n2} N	IE2	IE3		IEC IE2	IEC IE3	
8.2	796	2.5	175.0	30000	**A553_175.0 S2 ME2SB4**	**A553_175.0 S2 MX2SB4**	288	**A553_175.0 P80 BE80B4**	**A553_175.0 P80 BX80B4**	289
8.2	789	1.9	173.4	20000	**A503_173.4 S2 ME2SB4**	**A503_173.4 S2 MX2SB4**	284	**A503_173.4 P80 BE80B4**	**A503_173.4 P80 BX80B4**	285
8.3	780	3.6	171.5	30000	**A603_171.5 S2 ME2SB4**	**A603_171.5 S2 MX2SB4**	292	**A603_171.5 P80 BE80B4**	**A603_171.5 P80 BX80B4**	293
8.9	730	2.7	160.4	30000	**A553_160.4 S2 ME2SB4**	**A553_160.4 S2 MX2SB4**	288	**A553_160.4 P80 BE80B4**	**A553_160.4 P80 BX80B4**	289
9.3	703	2.1	154.6	20000	**A503_154.6 S2 ME2SB4**	**A503_154.6 S2 MX2SB4**	284	**A503_154.6 P80 BE80B4**	**A503_154.6 P80 BX80B4**	285
9.7	668	1.3	146.9	15000	**A413_146.9 S2 ME2SB4**	**A413_146.9 S2 MX2SB4**	280	**A413_146.9 P80 BE80B4**	**A413_146.9 P80 BX80B4**	281
9.7	668	3.0	146.8	30000	**A553_146.8 S2 ME2SB4**	**A553_146.8 S2 MX2SB4**	288	**A553_146.8 P80 BE80B4**	**A553_146.8 P80 BX80B4**	289
10.2	640	2.3	140.6	20000	**A503_140.6 S2 ME2SB4**	**A503_140.6 S2 MX2SB4**	284	**A503_140.6 P80 BE80B4**	**A503_140.6 P80 BX80B4**	285
10.5	620	0.9	136.3	12000	**A353_136.3 S2 ME2SB4**	**A353_136.3 S2 MX2SB4**	276	**A353_136.3 P80 BE80B4**	**A353_136.3 P80 BX80B4**	277
10.8	604	3.3	132.7	30000	**A553_132.7 S2 ME2SB4**	**A553_132.7 S2 MX2SB4**	288	**A553_132.7 P80 BE80B4**	**A553_132.7 P80 BX80B4**	289
11.0	590	2.5	129.7	20000	**A503_129.7 S2 ME2SB4**	**A503_129.7 S2 MX2SB4**	284	**A503_129.7 P80 BE80B4**	**A503_129.7 P80 BX80B4**	285
11.5	564	3.5	123.9	30000	**A553_123.9 S2 ME2SB4**	**A553_123.9 S2 MX2SB4**	288	**A553_123.9 P80 BE80B4**	**A553_123.9 P80 BX80B4**	289
12.1	537	2.8	118.0	20000	**A503_118.0 S2 ME2SB4**	**A503_118.0 S2 MX2SB4**	284	**A503_118.0 P80 BE80B4**	**A503_118.0 P80 BX80B4**	285
12.2	532	1.1	116.9	12000	**A353_116.9 S2 ME2SB4**	**A353_116.9 S2 MX2SB4**	276	**A353_116.9 P80 BE80B4**	**A353_116.9 P80 BX80B4**	277
12.3	527	1.6	115.9	15000	**A413_115.9 S2 ME2SB4**	**A413_115.9 S2 MX2SB4**	280	**A413_115.9 P80 BE80B4**	**A413_115.9 P80 BX80B4**	281
13.1	498	3.0	109.4	20000	**A503_109.4 S2 ME2SB4**	**A503_109.4 S2 MX2SB4**	284	**A503_109.4 P80 BE80B4**	**A503_109.4 P80 BX80B4**	285
13.5	480	1.1	105.5	12000	**A353_105.5 S2 ME2SB4**	**A353_105.5 S2 MX2SB4**	276	**A353_105.5 P80 BE80B4**	**A353_105.5 P80 BX80B4**	277
14.4	453	3.3	99.5	20000	**A503_99.5 S2 ME2SB4**	**A503_99.5 S2 MX2SB4**	284	**A503_99.5 P80 BE80B4**	**A503_99.5 P80 BX80B4**	285
15.0	450	1.2	95.6	12000	**A352_95.6 S2 ME2SB4**	**A352_95.6 S2 MX2SB4**	276	**A352_95.6 P80 BE80B4**	**A352_95.6 P80 BX80B4**	277
15.4	422	1.9	92.8	15000	**A413_92.8 S2 ME2SB4**	**A413_92.8 S2 MX2SB4**	280	**A413_92.8 P80 BE80B4**	**A413_92.8 P80 BX80B4**	281
17.3	388	1.5	82.5	12000	**A352_82.5 S2 ME2SB4**	**A352_82.5 S2 MX2SB4**	276	**A352_82.5 P80 BE80B4**	**A352_82.5 P80 BX80B4**	277
18.0	372	2.3	79.2	15000	**A412_79.2 S2 ME2SB4**	**A412_79.2 S2 MX2SB4**	280	**A412_79.2 P80 BE80B4**	**A412_79.2 P80 BX80B4**	281
18.7	360	1.0	76.5	8580	**A302_76.5 S2 ME2SB4**	**A302_76.5 S2 MX2SB4**	272	**A302_76.5 P80 BE80B4**	**A302_76.5 P80 BX80B4**	273
19.3	349	1.7	74.3	12000	**A352_74.3 S2 ME2SB4**	**A352_74.3 S2 MX2SB4**	276	**A352_74.3 P80 BE80B4**	**A352_74.3 P80 BX80B4**	277
20.1	335	2.5	71.3	15000	**A412_71.3 S2 ME2SB4**	**A412_71.3 S2 MX2SB4**	280	**A412_71.3 P80 BE80B4**	**A412_71.3 P80 BX80B4**	281
21.7	310	1.3	66.0	8360	**A302_66.0 S2 ME2SB4**	**A302_66.0 S2 MX2SB4**	272	**A302_66.0 P80 BE80B4**	**A302_66.0 P80 BX80B4**	273
21.7	309	1.9	65.8	12000	**A352_65.8 S2 ME2SB4**	**A352_65.8 S2 MX2SB4**	276	**A352_65.8 P80 BE80B4**	**A352_65.8 P80 BX80B4**	277
22.3	302	2.8	64.2	15000	**A412_64.2 S2 ME2SB4**	**A412_64.2 S2 MX2SB4**	280	**A412_64.2 P80 BE80B4**	**A412_64.2 P80 BX80B4**	281
23.7	284	2.1	60.4	12000	**A352_60.4 S2 ME2SB4**	**A352_60.4 S2 MX2SB4**	276	**A352_60.4 P80 BE80B4**	**A352_60.4 P80 BX80B4**	277
24.1	279	1.4	59.4	8190	**A302_59.4 S2 ME2SB4**	**A302_59.4 S2 MX2SB4**	272	**A302_59.4 P80 BE80B4**	**A302_59.4 P80 BX80B4**	273
24.3	276	3.1	58.8	15000	**A412_58.8 S2 ME2SB4**	**A412_58.8 S2 MX2SB4**	280	**A412_58.8 P80 BE80B4**	**A412_58.8 P80 BX80B4**	281
26.3	255	2.4	54.3	12000	**A352_54.3 S2 ME2SB4**	**A352_54.3 S2 MX2SB4**	276	**A352_54.3 P80 BE80B4**	**A352_54.3 P80 BX80B4**	277
26.7	252	1.0	53.7	5210	**A202_53.7 S2 ME2SB4**	**A202_53.7 S2 MX2SB4**	268	**A202_53.7 P80 BE80B4**	**A202_53.7 P80 BX80B4**	269
26.9	250	3.4	53.1	15000	**A412_53.1 S2 ME2SB4**	**A412_53.1 S2 MX2SB4**	280	**A412_53.1 P80 BE80B4**	**A412_53.1 P80 BX80B4**	281
27.1	248	1.7	52.7	7990	**A302_52.7 S2 ME2SB4**	**A302_52.7 S2 MX2SB4**	272	**A302_52.7 P80 BE80B4**	**A302_52.7 P80 BX80B4**	273
29.1	231	2.6	49.1	12000	**A352_49.1 S2 ME2SB4**	**A352_49.1 S2 MX2SB4**	276	**A352_49.1 P80 BE80B4**	**A352_49.1 P80 BX80B4**	277
29.6	227	1.1	48.3	5140	**A202_48.3 S2 ME2SB4**	**A202_48.3 S2 MX2SB4**	268	**A202_48.3 P80 BE80B4**	**A202_48.3 P80 BX80B4**	269
29.6	227	1.8	48.3	7840	**A302_48.3 S2 ME2SB4**	**A302_48.3 S2 MX2SB4**	272	**A302_48.3 P80 BE80B4**	**A302_48.3 P80 BX80B4**	273
31	215	2.8	45.8	12000	**A352_45.8 S2 ME2SB4**	**A352_45.8 S2 MX2SB4**	276	**A352_45.8 P80 BE80B4**	**A352_45.8 P80 BX80B4**	277
33	204	2.0	43.4	7660	**A302_43.4 S2 ME2SB4**	**A302_43.4 S2 MX2SB4**	272	**A302_43.4 P80 BE80B4**	**A302_43.4 P80 BX80B4**	273
33	203	1.2	43.2	5060	**A202_43.2 S2 ME2SB4**	**A202_43.2 S2 MX2SB4**	268	**A202_43.2 P80 BE80B4**	**A202_43.2 P80 BX80B4**	269
34	196	3.1	41.8	11900	**A352_41.8 S2 ME2SB4**	**A352_41.8 S2 MX2SB4**	276	**A352_41.8 P80 BE80B4**	**A352_41.8 P80 BX80B4**	277
36	186	1.3	39.6	4990	**A202_39.6 S2 ME2SB4**	**A202_39.6 S2 MX2SB4**	268	**A202_39.6 P80 BE80B4**	**A202_39.6 P80 BX80B4**	269
36	185	2.2	39.3	7480	**A302_39.3 S2 ME2SB4**	**A302_39.3 S2 MX2SB4**	272	**A302_39.3 P80 BE80B4**	**A302_39.3 P80 BX80B4**	273
39	172	2.4	36.6	7360	**A302_36.6 S2 ME2SB4**	**A302_36.6 S2 MX2SB4**	272	**A302_36.6 P80 BE80B4**	**A302_36.6 P80 BX80B4**	273
39	172	3.5	36.6	11500	**A352_36.6 S2 ME2SB4**	**A352_36.6 S2 MX2SB4**	276	**A352_36.6 P80 BE80B4**	**A352_36.6 P80 BX80B4**	277
40	167	1.5	35.4	4890	**A202_35.4 S2 ME2SB4**	**A202_35.4 S2 MX2SB4**	268	**A202_35.4 P80 BE80B4**	**A202_35.4 P80 BX80B4**	269
41	165	0.9	35.1	4320	**A102_35.1 S2 ME2SB4**	**A102_35.1 S2 MX2SB4**	264	**A102_35.1 P80 BE80B4**	**A102_35.1 P80 BX80B4**	265
43	157	2.6	33.4	7200	**A302_33.4 S2 ME2SB4**	**A302_33.4 S2 MX2SB4**	272	**A302_33.4 P80 BE80B4**	**A302_33.4 P80 BX80B4**	273
44	151	1.0	32.2	5080	**A102_32.2 S2 ME2SB4**	**A102_32.2 S2 MX2SB4**	264	**A102_32.2 P80 BE80B4**	**A102_32.2 P80 BX80B4**	265
46	147	1.7	31.3	4780	**A202_31.3 S2 ME2SB4**	**A202_31.3 S2 MX2SB4**	268	**A202_31.3 P80 BE80B4**	**A202_31.3 P80 BX80B4**	269
49	138	3.0	29.3	6960	**A302_29.3 S2 ME2SB4**	**A302_29.3 S2 MX2SB4**	272	**A302_29.3 P80 BE80B4**	**A302_29.3 P80 BX80B4**	273
49	137	1.8	29.2	4710	**A202_29.2 S2 ME2SB4**	**A202_29.2 S2 MX2SB4**	268	**A202_29.2 P80 BE80B4**	**A202_29.2 P80 BX80B4**	269
50	134	1.1	28.6	4200	**A102_28.6 S2 ME2SB4**	**A102_28.6 S2 MX2SB4**	264	**A102_28.6 P80 BE80B4**	**A102_28.6 P80 BX80B4**	265
54	125	3.3	26.5	6790	**A302_26.5 S2 ME2SB4**	**A302_26.5 S2 MX2SB4**	272	**A302_26.5 P80 BE80B4**	**A302_26.5 P80 BX80B4**	273
54	124	2.0	26.5	4620	**A202_26.5 S2 ME2SB4**	**A202_26.5 S2 MX2SB4**	268	**A202_26.5 P80 BE80B4**	**A202_26.5 P80 BX80B4**	269
56	120	1.3	25.5	4900	**A102_25.5 S2 ME2SB4**	**A102_25.5 S2 MX2SB4**	264	**A102_25.5 P80 BE80B4**	**A102_25.5 P80 BX80B4**	265
60	112	0.9	23.8	2200	**A052_23.8 S2 ME2SB4**	**A052_23.8 S2 MX2SB4**	261	**A052_23.8 P80 BE80B4**	**A052_23.8 P80 BX80B4**	261
60	112	1.3	23.8	4070	**A102_23.8 S2 ME2SB4**	**A102_23.8 S2 MX2SB4**	264	**A102_23.8 P80 BE80B4**	**A102_23.8 P80 BX80B4**	265
62	109	2.3	23.1	4480	**A202_23.1 S2 ME2SB4**	**A202_23.1 S2 MX2SB4**	268	**A202_23.1 P80 BE80B4**	**A202_23.1 P80 BX80B4**	269
67	100	1.0	21.4	2210	**A052_21.4 S2 ME2SB4**	**A052_21.4 S2 MX2SB4**	261	**A052_21.4 P80 BE80B4**	**A052_21.4 P80 BX80B4**	261
67	100	1.5	21.4	4740	**A102_21.4 S2 ME2SB4**	**A102_21.4 S2 MX2SB4**	264	**A102_21.4 P80 BE80B4**	**A102_21.4 P80 BX80B4**	265
67	100	2.5	21.2	4390	**A202_21.2 S2 ME2SB4**	**A202_21.2 S2 MX2SB4**	268	**A202_21.2 P80 BE80B4**	**A202_21.2 P80 BX80B4**	269
77	87	1.1	18.6	2190	**A052_18.6 S2 ME2SB4**	**A052_18.6 S2 MX2SB4**	261	**A052_18.6 P80 BE80B4**	**A052_18.6 P80 BX80B4**	261
77	87	1.7	18.6	3880	**A102_18.6 S2 ME2SB4**	**A102_18.6 S2 MX2SB4**	264	**A102_18.6 P80 BE80B4**	**A102_18.6 P80 BX80B4**	265

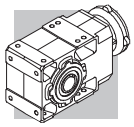

0.75 kW

n_2 min-1	M_2 Nm	S	i	R_{n2} N	IE2	IE3		IE2	IE3	
79	85	2.9	18.1	4230	**A202_18.1 S2 ME2SB4**	**A202_18.1 S2 MX2SB4**	268	**A202_18.1 P80 BE80B4**	**A202_18.1 P80 BX80B4**	269
87	77	1.3	16.4	2160	**A052_16.4 S2 ME2SB4**	**A052_16.4 S2 MX2SB4**	261	**A052_16.4 P80 BE80B4**	**A052_16.4 P80 BX80B4**	261
87	77	1.9	16.4	4490	**A102_16.4 S2 ME2SB4**	**A102_16.4 S2 MX2SB4**	264	**A102_16.4 P80 BE80B4**	**A102_16.4 P80 BX80B4**	265
88	76	3.3	16.2	4110	**A202_16.2 S2 ME2SB4**	**A202_16.2 S2 MX2SB4**	268	**A202_16.2 P80 BE80B4**	**A202_16.2 P80 BX80B4**	269
103	65	1.5	13.9	2110	**A052_13.9 S2 ME2SB4**	**A052_13.9 S2 MX2SB4**	261	**A052_13.9 P80 BE80B4**	**A052_13.9 P80 BX80B4**	261
103	65	2.3	13.9	3640	**A102_13.9 S2 ME2SB4**	**A102_13.9 S2 MX2SB4**	264	**A102_13.9 P80 BE80B4**	**A102_13.9 P80 BX80B4**	265
116	58	1.7	12.3	2080	**A052_12.3 S2 ME2SB4**	**A052_12.3 S2 MX2SB4**	261	**A052_12.3 P80 BE80B4**	**A052_12.3 P80 BX80B4**	261
116	58	2.4	12.3	3530	**A102_12.3 S2 ME2SB4**	**A102_12.3 S2 MX2SB4**	264	**A102_12.3 P80 BE80B4**	**A102_12.3 P80 BX80B4**	265
135	50	2.0	10.6	2010	**A052_10.6 S2 ME2SB4**	**A052_10.6 S2 MX2SB4**	261	**A052_10.6 P80 BE80B4**	**A052_10.6 P80 BX80B4**	261
135	50	3.0	10.6	3400	**A102_10.6 S2 ME2SB4**	**A102_10.6 S2 MX2SB4**	264	**A102_10.6 P80 BE80B4**	**A102_10.6 P80 BX80B4**	265
149	45	2.2	9.6	1990	**A052_9.6 S2 ME2SB4**	**A052_9.6 S2 MX2SB4**	261	**A052_9.6 P80 BE80B4**	**A052_9.6 P80 BX80B4**	261
149	45	3.1	9.6	3320	**A102_9.6 S2 ME2SB4**	**A102_9.6 S2 MX2SB4**	264	**A102_9.6 P80 BE80B4**	**A102_9.6 P80 BX80B4**	265
168	40	2.5	8.5	1940	**A052_8.5 S2 ME2SB4**	**A052_8.5 S2 MX2SB4**	261	**A052_8.5 P80 BE80B4**	**A052_8.5 P80 BX80B4**	261
168	40	3.5	8.5	3820	**A102_8.5 S2 ME2SB4**	**A102_8.5 S2 MX2SB4**	264	**A102_8.5 P80 BE80B4**	**A102_8.5 P80 BX80B4**	265
198	34	3.0	7.2	1870	**A052_7.2 S2 ME2SB4**	**A052_7.2 S2 MX2SB4**	261	**A052_7.2 P80 BE80B4**	**A052_7.2 P80 BX80B4**	261
226	30	3.4	6.3	1810	**A052_6.3 S2 ME2SB4**	**A052_6.3 S2 MX2SB4**	261	**A052_6.3 P80 BE80B4**	**A052_6.3 P80 BX80B4**	261
262	26	3.7	5.5	1750	**A052_5.5 S2 ME2SB4**	**A052_5.5 S2 MX2SB4**	261	**A052_5.5 P80 BE80B4**	**A052_5.5 P80 BX80B4**	261
270	25	3.2	10.6	1720	**A052_10.6 S2 ME2SA2**		261	**A052_10.6 P80 BE80A2**		261
296	23	4.2	9.6	1690	**A052_9.6 S2 ME2SA2**		261	**A052_9.6 P80 BE80A2**		261
335	20	4.5	8.5	1640	**A052_8.5 S2 ME2SA2**		261	**A052_8.5 P80 BE80A2**		261
395	17.0	5.0	7.2	1570	**A052_7.2 S2 ME2SA2**		261	**A052_7.2 P80 BE80A2**		261
450	15.0	5.3	6.3	1510	**A052_6.3 S2 ME2SA2**		261	**A052_6.3 P80 BE80A2**		261
521	12.9	5.8	5.5	1450	**A052_5.5 S2 ME2SA2**		261	**A052_5.5 P80 BE80A2**		261

1.1 kW

n_2 min-1	M_2 Nm	S	i	R_{n2} N	IE2	IE3		IE2	IE3	
0.63	14914	0.9	1507	75000	**A904_1507 S3 ME3LA6**		302	**A904_1507 P100 BE100M6**		303
0.71	13103	1.1	1324	75000	**A904_1324 S3 ME3LA6**		302	**A904_1324 P100 BE100M6**		303
0.77	12094	1.2	1222	75000	**A904_1222 S3 ME3LA6**		302	**A904_1222 P100 BE100M6**		303
0.88	10751	1.3	1632	75000	**A904_1632 S3 ME3SA4**	**A904_1632 S3 MX3SA4**	302	**A904_1632 P90 BE90S4**	**A904_1632 P90 BX90S4**	303
0.95	9924	1.4	1507	75000	**A904_1507 S3 ME3SA4**	**A904_1507 S3 MX3SA4**	302	**A904_1507 P90 BE90S4**	**A904_1507 P90 BX90S4**	303
1.1	8825	0.9	1340	65000	**A804_1340 S3 ME3SA4**	**A804_1340 S3 MX3SA4**	299	**A804_1340 P90 BE90S4**	**A804_1340 P90 BX90S4**	300
1.1	8720	1.6	1324	75000	**A904_1324 S3 ME3SA4**	**A904_1324 S3 MX3SA4**	302	**A904_1324 P90 BE90S4**	**A904_1324 P90 BX90S4**	303
1.2	8146	1.0	1237	65000	**A804_1237 S3 ME3SA4**	**A804_1237 S3 MX3SA4**	299	**A804_1237 P90 BE90S4**	**A804_1237 P90 BX90S4**	300
1.2	8049	1.7	1222	75000	**A904_1222 S3 ME3SA4**	**A904_1222 S3 MX3SA4**	302	**A904_1222 P90 BE90S4**	**A904_1222 P90 BX90S4**	303
1.3	7314	1.9	1111	75000	**A904_1111 S3 ME3SA4**	**A904_1111 S3 MX3SA4**	302	**A904_1111 P90 BE90S4**	**A904_1111 P90 BX90S4**	303
1.3	7145	1.1	1085	65000	**A804_1085 S3 ME3SA4**	**A804_1085 S3 MX3SA4**	299	**A804_1085 P90 BE90S4**	**A804_1085 P90 BX90S4**	300
1.4	6752	2.1	1025	75000	**A904_1025 S3 ME3SA4**	**A904_1025 S3 MX3SA4**	302	**A904_1025 P90 BE90S4**	**A904_1025 P90 BX90S4**	303
1.4	6595	1.2	1001	65000	**A804_1001 S3 ME3SA4**	**A804_1001 S3 MX3SA4**	299	**A804_1001 P90 BE90S4**	**A804_1001 P90 BX90S4**	300
1.5	6172	2.3	937.2	75000	**A904_937.2 S3 ME3SA4**	**A904_937.2 S3 MX3SA4**	302	**A904_937.2 P90 BE90S4**	**A904_937.2 P90 BX90S4**	303
1.6	5919	1.4	898.7	65000	**A804_898.7 S3 ME3SA4**	**A804_898.7 S3 MX3SA4**	299	**A804_898.7 P90 BE90S4**	**A804_898.7 P90 BX90S4**	300
1.7	5697	2.5	865.1	75000	**A904_865.1 S3 ME3SA4**	**A904_865.1 S3 MX3SA4**	302	**A904_865.1 P90 BE90S4**	**A904_865.1 P90 BX90S4**	303
1.7	5633	0.9	855.3	50000	**A704_855.3 S3 ME3SA4**	**A704_855.3 S3 MX3SA4**	296	**A704_855.3 P90 BE90S4**	**A704_855.3 P90 BX90S4**	297
1.7	5463	1.5	829.5	65000	**A804_829.5 S3 ME3SA4**	**A804_829.5 S3 MX3SA4**	299	**A804_829.5 P90 BE90S4**	**A804_829.5 P90 BX90S4**	300
1.9	5051	2.8	766.9	75000	**A904_766.9 S3 ME3SA4**	**A904_766.9 S3 MX3SA4**	302	**A904_766.9 P90 BE90S4**	**A904_766.9 P90 BX90S4**	303
1.9	5031	1.0	763.9	50000	**A704_763.9 S3 ME3SA4**	**A704_763.9 S3 MX3SA4**	296	**A704_763.9 P90 BE90S4**	**A704_763.9 P90 BX90S4**	297
1.9	5019	1.6	762.1	65000	**A804_762.1 S3 ME3SA4**	**A804_762.1 S3 MX3SA4**	299	**A804_762.1 P90 BE90S4**	**A804_762.1 P90 BX90S4**	300
2.0	4662	3.0	707.9	75000	**A904_707.9 S3 ME3SA4**	**A904_707.9 S3 MX3SA4**	302	**A904_707.9 P90 BE90S4**	**A904_707.9 P90 BX90S4**	303
2.0	4644	1.1	705.1	50000	**A704_705.1 S3 ME3SA4**	**A704_705.1 S3 MX3SA4**	296	**A704_705.1 P90 BE90S4**	**A704_705.1 P90 BX90S4**	297
2.0	4633	1.7	703.5	65000	**A804_703.5 S3 ME3SA4**	**A804_703.5 S3 MX3SA4**	299	**A804_703.5 P90 BE90S4**	**A804_703.5 P90 BX90S4**	300
2.2	4245	1.2	644.6	50000	**A704_644.6 S3 ME3SA4**	**A704_644.6 S3 MX3SA4**	296	**A704_644.6 P90 BE90S4**	**A704_644.6 P90 BX90S4**	297
2.4	3999	2.0	607.2	65000	**A804_607.2 S3 ME3SA4**	**A804_607.2 S3 MX3SA4**	299	**A804_607.2 P90 BE90S4**	**A804_607.2 P90 BX90S4**	300
2.4	3962	3.5	601.6	75000	**A904_601.6 S3 ME3SA4**	**A904_601.6 S3 MX3SA4**	302	**A904_601.6 P90 BE90S4**	**A904_601.6 P90 BX90S4**	303
2.4	3919	1.3	595.0	50000	**A704_595.0 S3 ME3SA4**	**A704_595.0 S3 MX3SA4**	296	**A704_595.0 P90 BE90S4**	**A704_595.0 P90 BX90S4**	297
2.6	3691	2.2	560.5	65000	**A804_560.5 S3 ME3SA4**	**A804_560.5 S3 MX3SA4**	299	**A804_560.5 P90 BE90S4**	**A804_560.5 P90 BX90S4**	300
2.8	3394	1.5	515.4	50000	**A704_515.4 S3 ME3SA4**	**A704_515.4 S3 MX3SA4**	296	**A704_515.4 P90 BE90S4**	**A704_515.4 P90 BX90S4**	297
3.0	3154	2.5	478.9	65000	**A804_478.9 S3 ME3SA4**	**A804_478.9 S3 MX3SA4**	299	**A804_478.9 P90 BE90S4**	**A804_478.9 P90 BX90S4**	300
3.0	3133	1.6	475.8	50000	**A704_475.8 S3 ME3SA4**	**A704_475.8 S3 MX3SA4**	296	**A704_475.8 P90 BE90S4**	**A704_475.8 P90 BX90S4**	297

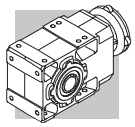

1.1 kW

n_2 min-1	M_2 Nm	S	i	R_{n2} N	IE2	IE3		IEC IE2	IEC IE3	
3.2	2912	2.7	442.1	65000	**A804_442.1 S3 ME3SA4**	**A804_442.1 S3 MX3SA4**	299	**A804_442.1 P90 BE90S4**	**A804_442.1 P90 BX90S4**	300
3.3	2887	1.0	438.4	30000	**A604_438.4 S3 ME3SA4**	**A604_438.4 S3 MX3SA4**	292	**A604_438.4 P90 BE90S4**	**A604_438.4 P90 BX90S4**	293
3.5	2665	1.1	404.7	30000	**A604_404.7 S3 ME3SA4**	**A604_404.7 S3 MX3SA4**	292	**A604_404.7 P90 BE90S4**	**A604_404.7 P90 BX90S4**	293
3.6	2635	1.9	400.2	50000	**A704_400.2 S3 ME3SA4**	**A704_400.2 S3 MX3SA4**	296	**A704_400.2 P90 BE90S4**	**A704_400.2 P90 BX90S4**	297
3.7	2526	3.2	383.5	65000	**A804_383.5 S3 ME3SA4**	**A804_383.5 S3 MX3SA4**	299	**A804_383.5 P90 BE90S4**	**A804_383.5 P90 BX90S4**	300
3.9	2433	2.1	369.4	50000	**A704_369.4 S3 ME3SA4**	**A704_369.4 S3 MX3SA4**	296	**A704_369.4 P90 BE90S4**	**A704_369.4 P90 BX90S4**	297
4.0	2331	3.4	354.0	65000	**A804_354.0 S3 ME3SA4**	**A804_354.0 S3 MX3SA4**	299	**A804_354.0 P90 BE90S4**	**A804_354.0 P90 BX90S4**	300
4.1	2313	1.2	351.2	30000	**A604_351.2 S3 ME3SA4**	**A604_351.2 S3 MX3SA4**	292	**A604_351.2 P90 BE90S4**	**A604_351.2 P90 BX90S4**	293
4.4	2139	0.9	324.7	30000	**A554_324.7 S3 ME3SA4**	**A554_324.7 S3 MX3SA4**	288	**A554_324.7 P90 BE90S4**	**A554_324.7 P90 BX90S4**	289
4.4	2135	1.3	324.2	30000	**A604_324.2 S3 ME3SA4**	**A604_324.2 S3 MX3SA4**	292	**A604_324.2 P90 BE90S4**	**A604_324.2 P90 BX90S4**	293
4.5	2083	2.4	316.4	50000	**A704_316.4 S3 ME3SA4**	**A704_316.4 S3 MX3SA4**	296	**A704_316.4 P90 BE90S4**	**A704_316.4 P90 BX90S4**	297
4.9	1923	2.6	292.0	50000	**A704_292.0 S3 ME3SA4**	**A704_292.0 S3 MX3SA4**	296	**A704_292.0 P90 BE90S4**	**A704_292.0 P90 BX90S4**	297
5.0	1886	1.5	286.3	30000	**A604_286.3 S3 ME3SA4**	**A604_286.3 S3 MX3SA4**	292	**A604_286.3 P90 BE90S4**	**A604_286.3 P90 BX90S4**	293
5.4	1741	1.6	264.3	30000	**A604_264.3 S3 ME3SA4**	**A604_264.3 S3 MX3SA4**	292	**A604_264.3 P90 BE90S4**	**A604_264.3 P90 BX90S4**	293
5.4	1730	1.2	262.6	30000	**A554_262.6 S3 ME3SA4**	**A554_262.6 S3 MX3SA4**	288	**A554_262.6 P90 BE90S4**	**A554_262.6 P90 BX90S4**	289
5.5	1718	0.9	260.9	20000	**A504_260.9 S3 ME3SA4**	**A504_260.9 S3 MX3SA4**	284	**A504_260.9 P90 BE90S4**	**A504_260.9 P90 BX90S4**	285
6.0	1571	3.2	238.6	50000	**A704_238.6 S3 ME3SA4**	**A704_238.6 S3 MX3SA4**	296	**A704_238.6 P90 BE90S4**	**A704_238.6 P90 BX90S4**	297
6.2	1528	1.0	232.0	20000	**A504_232.0 S3 ME3SA4**	**A504_232.0 S3 MX3SA4**	284	**A504_232.0 P90 BE90S4**	**A504_232.0 P90 BX90S4**	285
6.3	1489	1.9	226.1	30000	**A604_226.1 S3 ME3SA4**	**A604_226.1 S3 MX3SA4**	292	**A604_226.1 P90 BE90S4**	**A604_226.1 P90 BX90S4**	293
6.5	1451	3.4	220.3	50000	**A704_220.3 S3 ME3SA4**	**A704_220.3 S3 MX3SA4**	296	**A704_220.3 P90 BE90S4**	**A704_220.3 P90 BX90S4**	297
6.8	1390	1.1	211.0	20000	**A504_211.0 S3 ME3SA4**	**A504_211.0 S3 MX3SA4**	284	**A504_211.0 P90 BE90S4**	**A504_211.0 P90 BX90S4**	285
6.9	1375	2.0	208.7	30000	**A604_208.7 S3 ME3SA4**	**A604_208.7 S3 MX3SA4**	292	**A604_208.7 P90 BE90S4**	**A604_208.7 P90 BX90S4**	293
6.9	1370	1.4	208.1	30000	**A554_208.1 S3 ME3SA4**	**A554_208.1 S3 MX3SA4**	288	**A554_208.1 P90 BE90S4**	**A554_208.1 P90 BX90S4**	289
7.4	1308	1.5	194.2	30000	**A553_194.2 S3 ME3SA4**	**A553_194.2 S3 MX3SA4**	288	**A553_194.2 P90 BE90S4**	**A553_194.2 P90 BX90S4**	289
7.5	1283	1.2	190.6	20000	**A503_190.6 S3 ME3SA4**	**A503_190.6 S3 MX3SA4**	284	**A503_190.6 P90 BE90S4**	**A503_190.6 P90 BX90S4**	285
7.7	1251	2.2	185.8	30000	**A603_185.8 S3 ME3SA4**	**A603_185.8 S3 MX3SA4**	292	**A603_185.8 P90 BE90S4**	**A603_185.8 P90 BX90S4**	293
8.2	1179	1.7	175.0	30000	**A553_175.0 S3 ME3SA4**	**A553_175.0 S3 MX3SA4**	288	**A553_175.0 P90 BE90S4**	**A553_175.0 P90 BX90S4**	289
8.2	1167	1.3	173.4	20000	**A503_173.4 S3 ME3SA4**	**A503_173.4 S3 MX3SA4**	284	**A503_173.4 P90 BE90S4**	**A503_173.4 P90 BX90S4**	285
8.3	1155	2.4	171.5	30000	**A603_171.5 S3 ME3SA4**	**A603_171.5 S3 MX3SA4**	292	**A603_171.5 P90 BE90S4**	**A603_171.5 P90 BX90S4**	293
8.9	1080	1.9	160.4	30000	**A553_160.4 S3 ME3SA4**	**A553_160.4 S3 MX3SA4**	288	**A553_160.4 P90 BE90S4**	**A553_160.4 P90 BX90S4**	289
9.2	1051	2.7	156.0	30000	**A603_156.0 S3 ME3SA4**	**A603_156.0 S3 MX3SA4**	292	**A603_156.0 P90 BE90S4**	**A603_156.0 P90 BX90S4**	293
9.3	1041	1.4	154.6	20000	**A503_154.6 S3 ME3SA4**	**A503_154.6 S3 MX3SA4**	284	**A503_154.6 P90 BE90S4**	**A503_154.6 P90 BX90S4**	285
9.7	989	2.0	146.8	30000	**A553_146.8 S3 ME3SA4**	**A553_146.8 S3 MX3SA4**	288	**A553_146.8 P90 BE90S4**	**A553_146.8 P90 BX90S4**	289
9.9	970	2.9	144.0	30000	**A603_144.0 S3 ME3SA4**	**A603_144.0 S3 MX3SA4**	292	**A603_144.0 P90 BE90S4**	**A603_144.0 P90 BX90S4**	293
10.2	947	1.6	140.6	20000	**A503_140.6 S3 ME3SA4**	**A503_140.6 S3 MX3SA4**	284	**A503_140.6 P90 BE90S4**	**A503_140.6 P90 BX90S4**	285
10.7	898	3.1	133.3	30000	**A603_133.3 S3 ME3SA4**	**A603_133.3 S3 MX3SA4**	292	**A603_133.3 P90 BE90S4**	**A603_133.3 P90 BX90S4**	293
10.8	894	2.2	132.7	30000	**A553_132.7 S3 ME3SA4**	**A553_132.7 S3 MX3SA4**	288	**A553_132.7 P90 BE90S4**	**A553_132.7 P90 BX90S4**	289
11.0	873	1.7	129.7	20000	**A503_129.7 S3 ME3SA4**	**A503_129.7 S3 MX3SA4**	284	**A503_129.7 P90 BE90S4**	**A503_129.7 P90 BX90S4**	285
11.5	834	2.4	123.9	30000	**A553_123.9 S3 ME3SA4**	**A553_123.9 S3 MX3SA4**	288	**A553_123.9 P90 BE90S4**	**A553_123.9 P90 BX90S4**	289
11.6	828	3.4	123.0	30000	**A603_123.0 S3 ME3SA4**	**A603_123.0 S3 MX3SA4**	292	**A603_123.0 P90 BE90S4**	**A603_123.0 P90 BX90S4**	293
12.1	794	1.9	118.0	20000	**A503_118.0 S3 ME3SA4**	**A503_118.0 S3 MX3SA4**	284	**A503_118.0 P90 BE90S4**	**A503_118.0 P90 BX90S4**	285
12.3	780	1.1	115.9	15000	**A413_115.9 S3 ME3SA4**	**A413_115.9 S3 MX3SA4**	280	**A413_115.9 P90 BE90S4**	**A413_115.9 P90 BX90S4**	281
13.1	737	2.0	109.4	20000	**A503_109.4 S3 ME3SA4**	**A503_109.4 S3 MX3SA4**	284	**A503_109.4 P90 BE90S4**	**A503_109.4 P90 BX90S4**	285
14.1	683	2.9	101.4	30000	**A553_101.4 S3 ME3SA4**	**A553_101.4 S3 MX3SA4**	288	**A553_101.4 P90 BE90S4**	**A553_101.4 P90 BX90S4**	289
14.4	670	2.2	99.5	20000	**A503_99.5 S3 ME3SA4**	**A503_99.5 S3 MX3SA4**	284	**A503_99.5 P90 BE90S4**	**A503_99.5 P90 BX90S4**	285
15.4	625	1.3	92.8	15000	**A413_92.8 S3 ME3SA4**	**A413_92.8 S3 MX3SA4**	280	**A413_92.8 P90 BE90S4**	**A413_92.8 P90 BX90S4**	281
16.0	603	2.5	89.5	20000	**A503_89.5 S3 ME3SA4**	**A503_89.5 S3 MX3SA4**	284	**A503_89.5 P90 BE90S4**	**A503_89.5 P90 BX90S4**	285
17.3	574	1.0	82.5	12000	**A352_82.5 S3 ME3SA4**	**A352_82.5 S3 MX3SA4**	276	**A352_82.5 P90 BE90S4**	**A352_82.5 P90 BX90S4**	277
17.6	548	2.7	81.5	20000	**A503_81.5 S3 ME3SA4**	**A503_81.5 S3 MX3SA4**	284	**A503_81.5 P90 BE90S4**	**A503_81.5 P90 BX90S4**	285
18.0	551	1.5	79.2	15000	**A412_79.2 S3 ME3SA4**	**A412_79.2 S3 MX3SA4**	280	**A412_79.2 P90 BE90S4**	**A412_79.2 P90 BX90S4**	281
19.3	517	1.2	74.3	12000	**A352_74.3 S3 ME3SA4**	**A352_74.3 S3 MX3SA4**	276	**A352_74.3 P90 BE90S4**	**A352_74.3 P90 BX90S4**	277
20.1	496	1.7	71.3	15000	**A412_71.3 S3 ME3SA4**	**A412_71.3 S3 MX3SA4**	280	**A412_71.3 P90 BE90S4**	**A412_71.3 P90 BX90S4**	281
20.4	473	3.2	70.2	20000	**A503_70.2 S3 ME3SA4**	**A503_70.2 S3 MX3SA4**	284	**A503_70.2 P90 BE90S4**	**A503_70.2 P90 BX90S4**	285
21.7	458	1.3	65.8	12000	**A352_65.8 S3 ME3SA4**	**A352_65.8 S3 MX3SA4**	276	**A352_65.8 P90 BE90S4**	**A352_65.8 P90 BX90S4**	277
22.3	446	1.9	64.2	15000	**A412_64.2 S3 ME3SA4**	**A412_64.2 S3 MX3SA4**	280	**A412_64.2 P90 BE90S4**	**A412_64.2 P90 BX90S4**	281
22.4	430	3.5	63.9	20000	**A503_63.9 S3 ME3SA4**	**A503_63.9 S3 MX3SA4**	284	**A503_63.9 P90 BE90S4**	**A503_63.9 P90 BX90S4**	285
23.7	420	1.4	60.4	12000	**A352_60.4 S3 ME3SA4**	**A352_60.4 S3 MX3SA4**	276	**A352_60.4 P90 BE90S4**	**A352_60.4 P90 BX90S4**	277
24.1	413	1.0	59.4	7420	**A302_59.4 S3 ME3SA4**	**A302_59.4 S3 MX3SA4**	272	**A302_59.4 P90 BE90S4**	**A302_59.4 P90 BX90S4**	273
24.3	409	2.1	58.8	15000	**A412_58.8 S3 ME3SA4**	**A412_58.8 S3 MX3SA4**	280	**A412_58.8 P90 BE90S4**	**A412_58.8 P90 BX90S4**	281
26.3	378	1.6	54.3	12000	**A352_54.3 S3 ME3SA4**	**A352_54.3 S3 MX3SA4**	276	**A352_54.3 P90 BE90S4**	**A352_54.3 P90 BX90S4**	277
26.9	370	2.3	53.1	15000	**A412_53.1 S3 ME3SA4**	**A412_53.1 S3 MX3SA4**	280	**A412_53.1 P90 BE90S4**	**A412_53.1 P90 BX90S4**	281
27.1	366	1.1	52.7	7310	**A302_52.7 S3 ME3SA4**	**A302_52.7 S3 MX3SA4**	272	**A302_52.7 P90 BE90S4**	**A302_52.7 P90 BX90S4**	273
29.1	341	1.8	49.1	11800	**A352_49.1 S3 ME3SA4**	**A352_49.1 S3 MX3SA4**	276	**A352_49.1 P90 BE90S4**	**A352_49.1 P90 BX90S4**	277
29.6	336	1.2	48.3	7220	**A302_48.3 S3 ME3SA4**	**A302_48.3 S3 MX3SA4**	272	**A302_48.3 P90 BE90S4**	**A302_48.3 P90 BX90S4**	273
29.6	336	2.5	48.3	15000	**A412_48.3 S3 ME3SA4**	**A412_48.3 S3 MX3SA4**	280	**A412_48.3 P90 BE90S4**	**A412_48.3 P90 BX90S4**	281

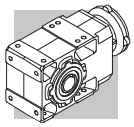

1.1 kW

n_2 min-1	M_2 Nm	S	i	R_{n2} N	IE2	IE3		IE2	IE3	
31	319	1.9	45.8	11700	**A352_45.8 S3 ME3SA4**	**A352_45.8 S3 MX3SA4**	276	**A352_45.8 P90 BE90S4**	**A352_45.8 P90 BX90S4**	277
32	313	2.6	45.1	15000	**A412_45.1 S3 ME3SA4**	**A412_45.1 S3 MX3SA4**	280	**A412_45.1 P90 BE90S4**	**A412_45.1 P90 BX90S4**	281
33	302	1.4	43.4	7100	**A302_43.4 S3 ME3SA4**	**A302_43.4 S3 MX3SA4**	272	**A302_43.4 P90 BE90S4**	**A302_43.4 P90 BX90S4**	273
34	291	2.1	41.8	11400	**A352_41.8 S3 ME3SA4**	**A352_41.8 S3 MX3SA4**	276	**A352_41.8 P90 BE90S4**	**A352_41.8 P90 BX90S4**	277
36	276	0.9	39.6	4500	**A202_39.6 S3 ME3SA4**	**A202_39.6 S3 MX3SA4**	268	**A202_39.6 P90 BE90S4**	**A202_39.6 P90 BX90S4**	269
36	273	1.5	39.3	6970	**A302_39.3 S3 ME3SA4**	**A302_39.3 S3 MX3SA4**	272	**A302_39.3 P90 BE90S4**	**A302_39.3 P90 BX90S4**	273
39	255	1.6	36.6	6880	**A302_36.6 S3 ME3SA4**	**A302_36.6 S3 MX3SA4**	272	**A302_36.6 P90 BE90S4**	**A302_36.6 P90 BX90S4**	273
39	255	2.4	36.6	11100	**A352_36.6 S3 ME3SA4**	**A352_36.6 S3 MX3SA4**	276	**A352_36.6 P90 BE90S4**	**A352_36.6 P90 BX90S4**	277
40	250	3.1	35.9	14300	**A412_35.9 S3 ME3SA4**	**A412_35.9 S3 MX3SA4**	280	**A412_35.9 P90 BE90S4**	**A412_35.9 P90 BX90S4**	281
40	246	1.0	35.4	4380	**A202_35.4 S3 ME3SA4**	**A202_35.4 S3 MX3SA4**	268	**A202_35.4 P90 BE90S4**	**A202_35.4 P90 BX90S4**	269
43	233	1.8	33.4	6760	**A302_33.4 S3 ME3SA4**	**A302_33.4 S3 MX3SA4**	272	**A302_33.4 P90 BE90S4**	**A302_33.4 P90 BX90S4**	273
43	231	2.6	33.2	10800	**A352_33.2 S3 ME3SA4**	**A352_33.2 S3 MX3SA4**	276	**A352_33.2 P90 BE90S4**	**A352_33.2 P90 BX90S4**	277
46	218	1.1	31.3	4320	**A202_31.3 S3 ME3SA4**	**A202_31.3 S3 MX3SA4**	268	**A202_31.3 P90 BE90S4**	**A202_31.3 P90 BX90S4**	269
49	204	2.0	29.3	6580	**A302_29.3 S3 ME3SA4**	**A302_29.3 S3 MX3SA4**	272	**A302_29.3 P90 BE90S4**	**A302_29.3 P90 BX90S4**	273
49	203	1.2	29.2	4290	**A202_29.2 S3 ME3SA4**	**A202_29.2 S3 MX3SA4**	268	**A202_29.2 P90 BE90S4**	**A202_29.2 P90 BX90S4**	269
50	198	3.0	28.4	10400	**A352_28.4 S3 ME3SA4**	**A352_28.4 S3 MX3SA4**	276	**A352_28.4 P90 BE90S4**	**A352_28.4 P90 BX90S4**	277
54	185	2.2	26.5	6440	**A302_26.5 S3 ME3SA4**	**A302_26.5 S3 MX3SA4**	272	**A302_26.5 P90 BE90S4**	**A302_26.5 P90 BX90S4**	273
54	184	1.4	26.5	4230	**A202_26.5 S3 ME3SA4**	**A202_26.5 S3 MX3SA4**	268	**A202_26.5 P90 BE90S4**	**A202_26.5 P90 BX90S4**	269
56	179	3.4	25.7	10100	**A352_25.7 S3 ME3SA4**	**A352_25.7 S3 MX3SA4**	276	**A352_25.7 P90 BE90S4**	**A352_25.7 P90 BX90S4**	277
60	165	0.9	23.8	3640	**A102_23.8 S3 ME3SA4**	**A102_23.8 S3 MX3SA4**	264	**A102_23.8 P90 BE90S4**	**A102_23.8 P90 BX90S4**	265
62	161	1.6	23.1	4140	**A202_23.1 S3 ME3SA4**	**A202_23.1 S3 MX3SA4**	268	**A202_23.1 P90 BE90S4**	**A202_23.1 P90 BX90S4**	269
63	158	2.6	22.8	6220	**A302_22.8 S3 ME3SA4**	**A302_22.8 S3 MX3SA4**	272	**A302_22.8 P90 BE90S4**	**A302_22.8 P90 BX90S4**	273
67	149	1.0	21.4	4280	**A102_21.4 S3 ME3SA4**	**A102_21.4 S3 MX3SA4**	264	**A102_21.4 P90 BE90S4**	**A102_21.4 P90 BX90S4**	265
67	148	1.7	21.2	4080	**A202_21.2 S3 ME3SA4**	**A202_21.2 S3 MX3SA4**	268	**A202_21.2 P90 BE90S4**	**A202_21.2 P90 BX90S4**	269
70	143	2.9	20.5	6070	**A302_20.5 S3 ME3SA4**	**A302_20.5 S3 MX3SA4**	272	**A302_20.5 P90 BE90S4**	**A302_20.5 P90 BX90S4**	273
77	129	1.2	18.6	3540	**A102_18.6 S3 ME3SA4**	**A102_18.6 S3 MX3SA4**	264	**A102_18.6 P90 BE90S4**	**A102_18.6 P90 BX90S4**	265
79	126	2.0	18.1	3970	**A202_18.1 S3 ME3SA4**	**A202_18.1 S3 MX3SA4**	268	**A202_18.1 P90 BE90S4**	**A202_18.1 P90 BX90S4**	269
80	125	3.2	18.0	5880	**A302_18.0 S3 ME3SA4**	**A302_18.0 S3 MX3SA4**	272	**A302_18.0 P90 BE90S4**	**A302_18.0 P90 BX90S4**	273
87	114	1.3	16.4	4130	**A102_16.4 S3 ME3SA4**	**A102_16.4 S3 MX3SA4**	264	**A102_16.4 P90 BE90S4**	**A102_16.4 P90 BX90S4**	265
88	114	3.4	16.3	5740	**A302_16.3 S3 ME3SA4**	**A302_16.3 S3 MX3SA4**	272	**A302_16.3 P90 BE90S4**	**A302_16.3 P90 BX90S4**	273
88	112	2.2	16.2	3880	**A202_16.2 S3 ME3SA4**	**A202_16.2 S3 MX3SA4**	268	**A202_16.2 P90 BE90S4**	**A202_16.2 P90 BX90S4**	269
102	98	2.5	14.1	3770	**A202_14.1 S3 ME3SA4**	**A202_14.1 S3 MX3SA4**	268	**A202_14.1 P90 BE90S4**	**A202_14.1 P90 BX90S4**	269
103	97	1.5	13.9	3380	**A102_13.9 S3 ME3SA4**	**A102_13.9 S3 MX3SA4**	264	**A102_13.9 P90 BE90S4**	**A102_13.9 P90 BX90S4**	265
116	86	1.6	12.3	3300	**A102_12.3 S3 ME3SA4**	**A102_12.3 S3 MX3SA4**	264	**A102_12.3 P90 BE90S4**	**A102_12.3 P90 BX90S4**	265
120	83	2.5	12.0	3620	**A202_12.0 S3 ME3SA4**	**A202_12.0 S3 MX3SA4**	268	**A202_12.0 P90 BE90S4**	**A202_12.0 P90 BX90S4**	269
135	73	2.0	10.6	3210	**A102_10.6 S3 ME3SA4**	**A102_10.6 S3 MX3SA4**	264	**A102_10.6 P90 BE90S4**	**A102_10.6 P90 BX90S4**	265
138	72	3.1	10.3	3510	**A202_10.3 S3 ME3SA4**	**A202_10.3 S3 MX3SA4**	268	**A202_10.3 P90 BE90S4**	**A202_10.3 P90 BX90S4**	269
149	67	2.1	9.6	3140	**A102_9.6 S3 ME3SA4**	**A102_9.6 S3 MX3SA4**	264	**A102_9.6 P90 BE90S4**	**A102_9.6 P90 BX90S4**	265
153	65	3.2	9.4	3420	**A202_9.4 S3 ME3SA4**	**A202_9.4 S3 MX3SA4**	268	**A202_9.4 P90 BE90S4**	**A202_9.4 P90 BX90S4**	269
168	59	2.4	8.5	3630	**A102_8.5 S3 ME3SA4**	**A102_8.5 S3 MX3SA4**	264	**A102_8.5 P90 BE90S4**	**A102_8.5 P90 BX90S4**	265
198	50	2.8	7.2	2940	**A102_7.2 S3 ME3SA4**	**A102_7.2 S3 MX3SA4**	264	**A102_7.2 P90 BE90S4**	**A102_7.2 P90 BX90S4**	265
226	44	3.2	6.3	3390	**A102_6.3 S3 ME3SA4**	**A102_6.3 S3 MX3SA4**	264	**A102_6.3 P90 BE90S4**	**A102_6.3 P90 BX90S4**	265
230	43	3.3	12.3	2830	**A102_12.3 S2 ME2SB2**		264	**A102_12.3 P80 BE80B2**		265
294	34	2.8	9.6	1600	**A052_9.6 S2 ME2SB2**		261	**A052_9.6 P80 BE80B2**		261
332	30	3.0	8.5	1560	**A052_8.5 S2 ME2SB2**		261	**A052_8.5 P80 BE80B2**		261
392	25	3.4	7.2	1500	**A052_7.2 S2 ME2SB2**		261	**A052_7.2 P80 BE80B2**		261
447	22	3.6	6.3	1450	**A052_6.3 S2 ME2SB2**		261	**A052_6.3 P80 BE80B2**		261
518	19.1	3.9	5.5	1400	**A052_5.5 S2 ME2SB2**		261	**A052_5.5 P80 BE80B2**		261

1.5 kW

n_2 min-1	M_2 Nm	S	i	R_{n2} N	IE2	IE3		IE2	IE3	
0.88	14528	1.0	1632	75000	**A904_1632 S3 ME3SB4**	**A904_1632 S3 MX3SB4**	302	**A904_1632 P90 BE90LA4**	**A904_1632 P90 BX90LA4**	303
0.95	13410	1.0	1507	75000	**A904_1507 S3 ME3SB4**	**A904_1507 S3 MX3SB4**	302	**A904_1507 P90 BE90LA4**	**A904_1507 P90 BX90LA4**	303
1.1	11784	1.2	1324	75000	**A904_1324 S3 ME3SB4**	**A904_1324 S3 MX3SB4**	302	**A904_1324 P90 BE90LA4**	**A904_1324 P90 BX90LA4**	303
1.2	10877	1.3	1222	75000	**A904_1222 S3 ME3SB4**	**A904_1222 S3 MX3SB4**	302	**A904_1222 P90 BE90LA4**	**A904_1222 P90 BX90LA4**	303
1.3	9884	1.4	1111	75000	**A904_1111 S3 ME3SB4**	**A904_1111 S3 MX3SB4**	302	**A904_1111 P90 BE90LA4**	**A904_1111 P90 BX90LA4**	303
1.4	9124	1.5	1025	75000	**A904_1025 S3 ME3SB4**	**A904_1025 S3 MX3SB4**	302	**A904_1025 P90 BE90LA4**	**A904_1025 P90 BX90LA4**	303
1.4	8913	0.9	1001	65000	**A804_1001 S3 ME3SB4**	**A804_1001 S3 MX3SB4**	299	**A804_1001 P90 BE90LA4**	**A804_1001 P90 BX90LA4**	300
1.5	8341	1.7	937.2	75000	**A904_937.2 S3 ME3SB4**	**A904_937.2 S3 MX3SB4**	302	**A904_937.2 P90 BE90LA4**	**A904_937.2 P90 BX90LA4**	303

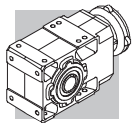

1.5 kW

n_2 min-1	M_2 Nm	S	i	R_{n2} N	IE2	IE3		IEC IE2	IEC IE3	
1.6	7998	1.0	898.7	65000	**A804_898.7 S3 ME3SB4**	**A804_898.7 S3 MX3SB4**	299	**A804_898.7 P90 BE90LA4**	**A804_898.7 P90 BX90LA4**	300
1.7	7699	1.8	865.1	75000	**A904_865.1 S3 ME3SB4**	**A904_865.1 S3 MX3SB4**	302	**A904_865.1 P90 BE90LA4**	**A904_865.1 P90 BX90LA4**	303
1.7	7383	1.1	829.5	65000	**A804_829.5 S3 ME3SB4**	**A804_829.5 S3 MX3SB4**	299	**A804_829.5 P90 BE90LA4**	**A804_829.5 P90 BX90LA4**	300
1.9	6826	2.1	766.9	75000	**A904_766.9 S3 ME3SB4**	**A904_766.9 S3 MX3SB4**	302	**A904_766.9 P90 BE90LA4**	**A904_766.9 P90 BX90LA4**	303
1.9	6783	1.2	762.1	65000	**A804_762.1 S3 ME3SB4**	**A804_762.1 S3 MX3SB4**	299	**A804_762.1 P90 BE90LA4**	**A804_762.1 P90 BX90LA4**	300
2.0	6300	2.2	707.9	75000	**A904_707.9 S3 ME3SB4**	**A904_707.9 S3 MX3SB4**	302	**A904_707.9 P90 BE90LA4**	**A904_707.9 P90 BX90LA4**	303
2.0	6261	1.3	703.5	65000	**A804_703.5 S3 ME3SB4**	**A804_703.5 S3 MX3SB4**	299	**A804_703.5 P90 BE90LA4**	**A804_703.5 P90 BX90LA4**	300
2.2	5737	0.9	644.6	50000	**A704_644.6 S3 ME3SB4**	**A704_644.6 S3 MX3SB4**	296	**A704_644.6 P90 BE90LA4**	**A704_644.6 P90 BX90LA4**	297
2.4	5404	1.5	607.2	65000	**A804_607.2 S3 ME3SB4**	**A804_607.2 S3 MX3SB4**	299	**A804_607.2 P90 BE90LA4**	**A804_607.2 P90 BX90LA4**	300
2.4	5354	2.6	601.6	75000	**A904_601.6 S3 ME3SB4**	**A904_601.6 S3 MX3SB4**	302	**A904_601.6 P90 BE90LA4**	**A904_601.6 P90 BX90LA4**	303
2.4	5296	0.9	595.0	50000	**A704_595.0 S3 ME3SB4**	**A704_595.0 S3 MX3SB4**	296	**A704_595.0 P90 BE90LA4**	**A704_595.0 P90 BX90LA4**	297
2.6	4988	1.6	560.5	65000	**A804_560.5 S3 ME3SB4**	**A804_560.5 S3 MX3SB4**	299	**A804_560.5 P90 BE90LA4**	**A804_560.5 P90 BX90LA4**	300
2.6	4942	2.8	555.3	75000	**A904_555.3 S3 ME3SB4**	**A904_555.3 S3 MX3SB4**	302	**A904_555.3 P90 BE90LA4**	**A904_555.3 P90 BX90LA4**	303
2.8	4587	1.1	515.4	50000	**A704_515.4 S3 ME3SB4**	**A704_515.4 S3 MX3SB4**	296	**A704_515.4 P90 BE90LA4**	**A704_515.4 P90 BX90LA4**	297
2.9	4331	3.2	486.6	75000	**A904_486.6 S3 ME3SB4**	**A904_486.6 S3 MX3SB4**	302	**A904_486.6 P90 BE90LA4**	**A904_486.6 P90 BX90LA4**	303
3.0	4262	1.9	478.9	65000	**A804_478.9 S3 ME3SB4**	**A804_478.9 S3 MX3SB4**	299	**A804_478.9 P90 BE90LA4**	**A804_478.9 P90 BX90LA4**	300
3.0	4234	1.2	475.8	50000	**A704_475.8 S3 ME3SB4**	**A704_475.8 S3 MX3SB4**	296	**A704_475.8 P90 BE90LA4**	**A704_475.8 P90 BX90LA4**	297
3.2	3998	3.5	449.2	75000	**A904_449.2 S3 ME3SB4**	**A904_449.2 S3 MX3SB4**	302	**A904_449.2 P90 BE90LA4**	**A904_449.2 P90 BX90LA4**	303
3.2	3935	2.0	442.1	65000	**A804_442.1 S3 ME3SB4**	**A804_442.1 S3 MX3SB4**	299	**A804_442.1 P90 BE90LA4**	**A804_442.1 P90 BX90LA4**	300
3.6	3561	1.4	400.2	50000	**A704_400.2 S3 ME3SB4**	**A704_400.2 S3 MX3SB4**	296	**A704_400.2 P90 BE90LA4**	**A704_400.2 P90 BX90LA4**	297
3.7	3413	2.3	383.5	65000	**A804_383.5 S3 ME3SB4**	**A804_383.5 S3 MX3SB4**	299	**A804_383.5 P90 BE90LA4**	**A804_383.5 P90 BX90LA4**	300
3.9	3288	1.5	369.4	50000	**A704_369.4 S3 ME3SB4**	**A704_369.4 S3 MX3SB4**	296	**A704_369.4 P90 BE90LA4**	**A704_369.4 P90 BX90LA4**	297
4.0	3150	2.5	354.0	65000	**A804_354.0 S3 ME3SB4**	**A804_354.0 S3 MX3SB4**	299	**A804_354.0 P90 BE90LA4**	**A804_354.0 P90 BX90LA4**	300
4.1	3126	0.9	351.2	30000	**A604_351.2 S3 ME3SB4**	**A604_351.2 S3 MX3SB4**	292	**A604_351.2 P90 BE90LA4**	**A604_351.2 P90 BX90LA4**	293
4.4	2885	1.0	324.2	30000	**A604_324.2 S3 ME3SB4**	**A604_324.2 S3 MX3SB4**	292	**A604_324.2 P90 BE90LA4**	**A604_324.2 P90 BX90LA4**	293
4.5	2816	1.8	316.4	50000	**A704_316.4 S3 ME3SB4**	**A704_316.4 S3 MX3SB4**	296	**A704_316.4 P90 BE90LA4**	**A704_316.4 P90 BX90LA4**	297
4.8	2673	3.0	300.4	65000	**A804_300.4 S3 ME3SB4**	**A804_300.4 S3 MX3SB4**	299	**A804_300.4 P90 BE90LA4**	**A804_300.4 P90 BX90LA4**	300
4.9	2599	1.9	292.0	50000	**A704_292.0 S3 ME3SB4**	**A704_292.0 S3 MX3SB4**	296	**A704_292.0 P90 BE90LA4**	**A704_292.0 P90 BX90LA4**	297
5.0	2548	1.1	286.3	30000	**A604_286.3 S3 ME3SB4**	**A604_286.3 S3 MX3SB4**	292	**A604_286.3 P90 BE90LA4**	**A604_286.3 P90 BX90LA4**	293
5.2	2468	3.2	277.3	65000	**A804_277.3 S3 ME3SB4**	**A804_277.3 S3 MX3SB4**	299	**A804_277.3 P90 BE90LA4**	**A804_277.3 P90 BX90LA4**	300
5.4	2352	1.2	264.3	30000	**A604_264.3 S3 ME3SB4**	**A604_264.3 S3 MX3SB4**	292	**A604_264.3 P90 BE90LA4**	**A604_264.3 P90 BX90LA4**	293
6.0	2124	2.4	238.6	50000	**A704_238.6 S3 ME3SB4**	**A704_238.6 S3 MX3SB4**	296	**A704_238.6 P90 BE90LA4**	**A704_238.6 P90 BX90LA4**	297
6.3	2013	1.4	226.1	30000	**A604_226.1 S3 ME3SB4**	**A604_226.1 S3 MX3SB4**	292	**A604_226.1 P90 BE90LA4**	**A604_226.1 P90 BX90LA4**	293
6.5	1960	2.6	220.3	50000	**A704_220.3 S3 ME3SB4**	**A704_220.3 S3 MX3SB4**	296	**A704_220.3 P90 BE90LA4**	**A704_220.3 P90 BX90LA4**	297
6.9	1858	1.5	208.7	30000	**A604_208.7 S3 ME3SB4**	**A604_208.7 S3 MX3SB4**	292	**A604_208.7 P90 BE90LA4**	**A604_208.7 P90 BX90LA4**	293
6.9	1852	1.1	208.1	30000	**A554_208.1 S3 ME3SB4**	**A554_208.1 S3 MX3SB4**	288	**A554_208.1 P90 BE90LA4**	**A554_208.1 P90 BX90LA4**	289
7.4	1767	1.1	194.2	30000	**A553_194.2 S3 ME3SB4**	**A553_194.2 S3 MX3SB4**	288	**A553_194.2 P90 BE90LA4**	**A553_194.2 P90 BX90LA4**	289
7.7	1690	1.7	185.8	30000	**A603_185.8 S3 ME3SB4**	**A603_185.8 S3 MX3SB4**	292	**A603_185.8 P90 BE90LA4**	**A603_185.8 P90 BX90LA4**	293
7.8	1637	3.1	183.9	50000	**A704_183.9 S3 ME3SB4**	**A704_183.9 S3 MX3SB4**	296	**A704_183.9 P90 BE90LA4**	**A704_183.9 P90 BX90LA4**	297
8.2	1593	1.3	175.0	30000	**A553_175.0 S3 ME3SB4**	**A553_175.0 S3 MX3SB4**	288	**A553_175.0 P90 BE90LA4**	**A553_175.0 P90 BX90LA4**	289
8.2	1578	1.0	173.4	20000	**A503_173.4 S3 ME3SB4**	**A503_173.4 S3 MX3SB4**	284	**A503_173.4 P90 BE90LA4**	**A503_173.4 P90 BX90LA4**	285
8.3	1560	1.8	171.5	30000	**A603_171.5 S3 ME3SB4**	**A603_171.5 S3 MX3SB4**	292	**A603_171.5 P90 BE90LA4**	**A603_171.5 P90 BX90LA4**	293
8.4	1511	3.3	169.8	50000	**A704_169.8 S3 ME3SB4**	**A704_169.8 S3 MX3SB4**	296	**A704_169.8 P90 BE90LA4**	**A704_169.8 P90 BX90LA4**	297
8.9	1460	1.4	160.4	30000	**A553_160.4 S3 ME3SB4**	**A553_160.4 S3 MX3SB4**	288	**A553_160.4 P90 BE90LA4**	**A553_160.4 P90 BX90LA4**	289
9.2	1420	2.0	156.0	30000	**A603_156.0 S3 ME3SB4**	**A603_156.0 S3 MX3SB4**	292	**A603_156.0 P90 BE90LA4**	**A603_156.0 P90 BX90LA4**	293
9.3	1407	1.1	154.6	20000	**A503_154.6 S3 ME3SB4**	**A503_154.6 S3 MX3SB4**	284	**A503_154.6 P90 BE90LA4**	**A503_154.6 P90 BX90LA4**	285
9.3	1399	2.9	153.7	50000	**A703_153.7 S3 ME3SB4**	**A703_153.7 S3 MX3SB4**	296	**A703_153.7 P90 BE90LA4**	**A703_153.7 P90 BX90LA4**	297
9.7	1336	1.5	146.8	30000	**A553_146.8 S3 ME3SB4**	**A553_146.8 S3 MX3SB4**	288	**A553_146.8 P90 BE90LA4**	**A553_146.8 P90 BX90LA4**	289
9.9	1311	2.1	144.0	30000	**A603_144.0 S3 ME3SB4**	**A603_144.0 S3 MX3SB4**	292	**A603_144.0 P90 BE90LA4**	**A603_144.0 P90 BX90LA4**	293
10.2	1280	1.2	140.6	20000	**A503_140.6 S3 ME3SB4**	**A503_140.6 S3 MX3SB4**	284	**A503_140.6 P90 BE90LA4**	**A503_140.6 P90 BX90LA4**	285
10.7	1213	2.3	133.3	30000	**A603_133.3 S3 ME3SB4**	**A603_133.3 S3 MX3SB4**	292	**A603_133.3 P90 BE90LA4**	**A603_133.3 P90 BX90LA4**	293
10.8	1208	1.7	132.7	30000	**A553_132.7 S3 ME3SB4**	**A553_132.7 S3 MX3SB4**	288	**A553_132.7 P90 BE90LA4**	**A553_132.7 P90 BX90LA4**	289
11.0	1180	1.3	129.7	20000	**A503_129.7 S3 ME3SB4**	**A503_129.7 S3 MX3SB4**	284	**A503_129.7 P90 BE90LA4**	**A503_129.7 P90 BX90LA4**	285
11.5	1127	1.8	123.9	30000	**A553_123.9 S3 ME3SB4**	**A553_123.9 S3 MX3SB4**	288	**A553_123.9 P90 BE90LA4**	**A553_123.9 P90 BX90LA4**	289
11.6	1120	2.5	123.0	30000	**A603_123.0 S3 ME3SB4**	**A603_123.0 S3 MX3SB4**	292	**A603_123.0 P90 BE90LA4**	**A603_123.0 P90 BX90LA4**	293
12.1	1073	1.4	118.0	20000	**A503_118.0 S3 ME3SB4**	**A503_118.0 S3 MX3SB4**	284	**A503_118.0 P90 BE90LA4**	**A503_118.0 P90 BX90LA4**	285
13.1	996	1.5	109.4	20000	**A503_109.4 S3 ME3SB4**	**A503_109.4 S3 MX3SB4**	284	**A503_109.4 P90 BE90LA4**	**A503_109.4 P90 BX90LA4**	285
13.3	981	2.9	107.8	30000	**A603_107.8 S3 ME3SB4**	**A603_107.8 S3 MX3SB4**	292	**A603_107.8 P90 BE90LA4**	**A603_107.8 P90 BX90LA4**	293
14.1	923	2.2	101.4	30000	**A553_101.4 S3 ME3SB4**	**A553_101.4 S3 MX3SB4**	288	**A553_101.4 P90 BE90LA4**	**A553_101.4 P90 BX90LA4**	289
14.4	906	1.7	99.5	20000	**A503_99.5 S3 ME3SB4**	**A503_99.5 S3 MX3SB4**	284	**A503_99.5 P90 BE90LA4**	**A503_99.5 P90 BX90LA4**	285
14.4	906	3.1	99.5	30000	**A603_99.5 S3 ME3SB4**	**A603_99.5 S3 MX3SB4**	292	**A603_99.5 P90 BE90LA4**	**A603_99.5 P90 BX90LA4**	293
15.4	844	0.9	92.8	15000	**A413_92.8 S3 ME3SB4**	**A413_92.8 S3 MX3SB4**	280	**A413_92.8 P90 BE90LA4**	**A413_92.8 P90 BX90LA4**	281
16.0	815	1.8	89.5	20000	**A503_89.5 S3 ME3SB4**	**A503_89.5 S3 MX3SB4**	284	**A503_89.5 P90 BE90LA4**	**A503_89.5 P90 BX90LA4**	285
16.6	786	3.6	86.4	30000	**A603_86.4 S3 ME3SB4**	**A603_86.4 S3 MX3SB4**	292	**A603_86.4 P90 BE90LA4**	**A603_86.4 P90 BX90LA4**	293
17.6	741	2.0	81.5	20000	**A503_81.5 S3 ME3SB4**	**A503_81.5 S3 MX3SB4**	284	**A503_81.5 P90 BE90LA4**	**A503_81.5 P90 BX90LA4**	285
18.0	724	2.8	79.5	30000	**A553_79.5 S3 ME3SB4**	**A553_79.5 S3 MX3SB4**	288	**A553_79.5 P90 BE90LA4**	**A553_79.5 P90 BX90LA4**	289
18.0	745	1.1	79.2	15000	**A412_79.2 S3 ME3SB4**	**A412_79.2 S3 MX3SB4**	280	**A412_79.2 P90 BE90LA4**	**A412_79.2 P90 BX90LA4**	281

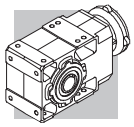

1.5 kW

n_2	M_2	S	i	R_{n2}	IE2	IE3		IE2	IEC IE3	
min-1	Nm			N						
20.1	670	1.3	71.3	15000	**A412_71.3 S3 ME3SB4**	**A412_71.3 S3 MX3SB4**	280	**A412_71.3 P90 BE90LA4**	**A412_71.3 P90 BX90LA4**	281
20.4	639	2.3	70.2	20000	**A503_70.2 S3 ME3SB4**	**A503_70.2 S3 MX3SB4**	284	**A503_70.2 P90 BE90LA4**	**A503_70.2 P90 BX90LA4**	285
21.7	619	1.0	65.8	11600	**A352_65.8 S3 ME3SB4**	**A352_65.8 S3 MX3SB4**	276	**A352_65.8 P90 BE90LA4**	**A352_65.8 P90 BX90LA4**	277
22.2	585	3.4	64.3	30000	**A553_64.3 S3 ME3SB4**	**A553_64.3 S3 MX3SB4**	288	**A553_64.3 P90 BE90LA4**	**A553_64.3 P90 BX90LA4**	289
22.3	603	1.4	64.2	15000	**A412_64.2 S3 ME3SB4**	**A412_64.2 S3 MX3SB4**	280	**A412_64.2 P90 BE90LA4**	**A412_64.2 P90 BX90LA4**	281
22.4	581	2.6	63.9	20000	**A503_63.9 S3 ME3SB4**	**A503_63.9 S3 MX3SB4**	284	**A503_63.9 P90 BE90LA4**	**A503_63.9 P90 BX90LA4**	285
23.7	567	1.1	60.4	11500	**A352_60.4 S3 ME3SB4**	**A352_60.4 S3 MX3SB4**	276	**A352_60.4 P90 BE90LA4**	**A352_60.4 P90 BX90LA4**	277
24.3	553	1.5	58.8	15000	**A412_58.8 S3 ME3SB4**	**A412_58.8 S3 MX3SB4**	280	**A412_58.8 P90 BE90LA4**	**A412_58.8 P90 BX90LA4**	281
25.2	517	2.9	56.8	20000	**A503_56.8 S3 ME3SB4**	**A503_56.8 S3 MX3SB4**	284	**A503_56.8 P90 BE90LA4**	**A503_56.8 P90 BX90LA4**	285
26.3	510	1.2	54.3	11300	**A352_54.3 S3 ME3SB4**	**A352_54.3 S3 MX3SB4**	276	**A352_54.3 P90 BE90LA4**	**A352_54.3 P90 BX90LA4**	277
26.9	500	1.7	53.1	15000	**A412_53.1 S3 ME3SB4**	**A412_53.1 S3 MX3SB4**	280	**A412_53.1 P90 BE90LA4**	**A412_53.1 P90 BX90LA4**	281
27.7	470	3.2	51.7	19700	**A503_51.7 S3 ME3SB4**	**A503_51.7 S3 MX3SB4**	284	**A503_51.7 P90 BE90LA4**	**A503_51.7 P90 BX90LA4**	285
29.1	461	1.3	49.1	11100	**A352_49.1 S3 ME3SB4**	**A352_49.1 S3 MX3SB4**	276	**A352_49.1 P90 BE90LA4**	**A352_49.1 P90 BX90LA4**	277
29.6	454	0.9	48.3	6680	**A302_48.3 S3 ME3SB4**	**A302_48.3 S3 MX3SB4**	272	**A302_48.3 P90 BE90LA4**	**A302_48.3 P90 BX90LA4**	273
29.6	454	1.9	48.3	14900	**A412_48.3 S3 ME3SB4**	**A412_48.3 S3 MX3SB4**	280	**A412_48.3 P90 BE90LA4**	**A412_48.3 P90 BX90LA4**	281
31	431	1.4	45.8	11000	**A352_45.8 S3 ME3SB4**	**A352_45.8 S3 MX3SB4**	276	**A352_45.8 P90 BE90LA4**	**A352_45.8 P90 BX90LA4**	277
32	424	2.0	45.1	14600	**A412_45.1 S3 ME3SB4**	**A412_45.1 S3 MX3SB4**	280	**A412_45.1 P90 BE90LA4**	**A412_45.1 P90 BX90LA4**	281
33	408	1.0	43.4	6450	**A302_43.4 S3 ME3SB4**	**A302_43.4 S3 MX3SB4**	272	**A302_43.4 P90 BE90LA4**	**A302_43.4 P90 BX90LA4**	273
34	393	1.5	41.8	10800	**A352_41.8 S3 ME3SB4**	**A352_41.8 S3 MX3SB4**	276	**A352_41.8 P90 BE90LA4**	**A352_41.8 P90 BX90LA4**	277
36	369	1.1	39.3	6380	**A302_39.3 S3 ME3SB4**	**A302_39.3 S3 MX3SB4**	272	**A302_39.3 P90 BE90LA4**	**A302_39.3 P90 BX90LA4**	273
39	344	1.2	36.6	6330	**A302_36.6 S3 ME3SB4**	**A302_36.6 S3 MX3SB4**	272	**A302_36.6 P90 BE90LA4**	**A302_36.6 P90 BX90LA4**	273
39	344	1.7	36.6	10500	**A352_36.6 S3 ME3SB4**	**A352_36.6 S3 MX3SB4**	276	**A352_36.6 P90 BE90LA4**	**A352_36.6 P90 BX90LA4**	277
40	338	2.3	35.9	13800	**A412_35.9 S3 ME3SB4**	**A412_35.9 S3 MX3SB4**	280	**A412_35.9 P90 BE90LA4**	**A412_35.9 P90 BX90LA4**	281
43	314	1.3	33.4	6260	**A302_33.4 S3 ME3SB4**	**A302_33.4 S3 MX3SB4**	272	**A302_33.4 P90 BE90LA4**	**A302_33.4 P90 BX90LA4**	273
43	312	1.9	33.2	10300	**A352_33.2 S3 ME3SB4**	**A352_33.2 S3 MX3SB4**	276	**A352_33.2 P90 BE90LA4**	**A352_33.2 P90 BX90LA4**	277
49	275	1.5	29.3	6140	**A302_29.3 S3 ME3SB4**	**A302_29.3 S3 MX3SB4**	272	**A302_29.3 P90 BE90LA4**	**A302_29.3 P90 BX90LA4**	273
49	275	0.9	29.2	3820	**A202_29.2 S3 ME3SB4**	**A202_29.2 S3 MX3SB4**	268	**A202_29.2 P90 BE90LA4**	**A202_29.2 P90 BX90LA4**	269
50	267	2.2	28.4	9940	**A352_28.4 S3 ME3SB4**	**A352_28.4 S3 MX3SB4**	276	**A352_28.4 P90 BE90LA4**	**A352_28.4 P90 BX90LA4**	277
50	266	2.7	28.3	13000	**A412_28.3 S3 ME3SB4**	**A412_28.3 S3 MX3SB4**	280	**A412_28.3 P90 BE90LA4**	**A412_28.3 P90 BX90LA4**	281
54	249	1.6	26.5	6040	**A302_26.5 S3 ME3SB4**	**A302_26.5 S3 MX3SB4**	272	**A302_26.5 P90 BE90LA4**	**A302_26.5 P90 BX90LA4**	273
54	249	1.0	26.5	3790	**A202_26.5 S3 ME3SB4**	**A202_26.5 S3 MX3SB4**	268	**A202_26.5 P90 BE90LA4**	**A202_26.5 P90 BX90LA4**	269
56	241	2.5	25.7	9710	**A352_25.7 S3 ME3SB4**	**A352_25.7 S3 MX3SB4**	276	**A352_25.7 P90 BE90LA4**	**A352_25.7 P90 BX90LA4**	277
62	217	1.2	23.1	3760	**A202_23.1 S3 ME3SB4**	**A202_23.1 S3 MX3SB4**	268	**A202_23.1 P90 BE90LA4**	**A202_23.1 P90 BX90LA4**	269
63	214	1.9	22.8	5870	**A302_22.8 S3 ME3SB4**	**A302_22.8 S3 MX3SB4**	272	**A302_22.8 P90 BE90LA4**	**A302_22.8 P90 BX90LA4**	273
63	213	3.2	22.7	12200	**A412_22.7 S3 ME3SB4**	**A412_22.7 S3 MX3SB4**	280	**A412_22.7 P90 BE90LA4**	**A412_22.7 P90 BX90LA4**	281
64	211	2.8	22.5	9400	**A352_22.5 S3 ME3SB4**	**A352_22.5 S3 MX3SB4**	276	**A352_22.5 P90 BE90LA4**	**A352_22.5 P90 BX90LA4**	277
67	200	1.3	21.2	3730	**A202_21.2 S3 ME3SB4**	**A202_21.2 S3 MX3SB4**	268	**A202_21.2 P90 BE90LA4**	**A202_21.2 P90 BX90LA4**	269
70	193	2.1	20.5	5760	**A302_20.5 S3 ME3SB4**	**A302_20.5 S3 MX3SB4**	272	**A302_20.5 P90 BE90LA4**	**A302_20.5 P90 BX90LA4**	273
70	192	3.1	20.4	9170	**A352_20.4 S3 ME3SB4**	**A352_20.4 S3 MX3SB4**	276	**A352_20.4 P90 BE90LA4**	**A352_20.4 P90 BX90LA4**	277
79	170	1.5	18.1	3660	**A202_18.1 S3 ME3SB4**	**A202_18.1 S3 MX3SB4**	268	**A202_18.1 P90 BE90LA4**	**A202_18.1 P90 BX90LA4**	269
80	169	2.4	18.0	5600	**A302_18.0 S3 ME3SB4**	**A302_18.0 S3 MX3SB4**	272	**A302_18.0 P90 BE90LA4**	**A302_18.0 P90 BX90LA4**	273
87	155	1.0	16.4	3720	**A102_16.4 S3 ME3SB4**	**A102_16.4 S3 MX3SB4**	264	**A102_16.4 P90 BE90LA4**	**A102_16.4 P90 BX90LA4**	265
88	154	2.5	16.3	5480	**A302_16.3 S3 ME3SB4**	**A302_16.3 S3 MX3SB4**	272	**A302_16.3 P90 BE90LA4**	**A302_16.3 P90 BX90LA4**	273
88	152	1.6	16.2	3600	**A202_16.2 S3 ME3SB4**	**A202_16.2 S3 MX3SB4**	268	**A202_16.2 P90 BE90LA4**	**A202_16.2 P90 BX90LA4**	269
102	132	1.9	14.1	3530	**A202_14.1 S3 ME3SB4**	**A202_14.1 S3 MX3SB4**	268	**A202_14.1 P90 BE90LA4**	**A202_14.1 P90 BX90LA4**	269
103	131	1.1	13.9	3090	**A102_13.9 S3 ME3SB4**	**A102_13.9 S3 MX3SB4**	264	**A102_13.9 P90 BE90LA4**	**A102_13.9 P90 BX90LA4**	265
105	128	2.9	13.6	5250	**A302_13.6 S3 ME3SB4**	**A302_13.6 S3 MX3SB4**	272	**A302_13.6 P90 BE90LA4**	**A302_13.6 P90 BX90LA4**	273
116	116	1.2	12.3	3040	**A102_12.3 S3 ME3SB4**	**A102_12.3 S3 MX3SB4**	264	**A102_12.3 P90 BE90LA4**	**A102_12.3 P90 BX90LA4**	265
120	112	1.9	12.0	3420	**A202_12.0 S3 ME3SB4**	**A202_12.0 S3 MX3SB4**	268	**A202_12.0 P90 BE90LA4**	**A202_12.0 P90 BX90LA4**	269
121	111	2.7	11.8	5060	**A302_11.8 S3 ME3SB4**	**A302_11.8 S3 MX3SB4**	272	**A302_11.8 P90 BE90LA4**	**A302_11.8 P90 BX90LA4**	273
125	107	3.3	22.8	5040	**A302_22.8 S3 ME3SA2**		272	**A302_22.8 P90 BE90SA2**		273
135	99	1.5	10.6	2990	**A102_10.6 S3 ME3SB4**	**A102_10.6 S3 MX3SB4**	264	**A102_10.6 P90 BE90LA4**	**A102_10.6 P90 BX90LA4**	265
137	98	3.5	10.5	4930	**A302_10.5 S3 ME3SB4**	**A302_10.5 S3 MX3SB4**	272	**A302_10.5 P90 BE90LA4**	**A302_10.5 P90 BX90LA4**	273
138	97	2.3	10.3	3330	**A202_10.3 S3 ME3SB4**	**A202_10.3 S3 MX3SB4**	268	**A202_10.3 P90 BE90LA4**	**A202_10.3 P90 BX90LA4**	269
149	90	1.5	9.6	2940	**A102_9.6 S3 ME3SB4**	**A102_9.6 S3 MX3SB4**	264	**A102_9.6 P90 BE90LA4**	**A102_9.6 P90 BX90LA4**	265
153	88	2.4	9.4	3250	**A202_9.4 S3 ME3SB4**	**A202_9.4 S3 MX3SB4**	268	**A202_9.4 P90 BE90LA4**	**A202_9.4 P90 BX90LA4**	269
154	88	3.4	9.3	4770	**A302_9.3 S3 ME3SB4**	**A302_9.3 S3 MX3SB4**	272	**A302_9.3 P90 BE90LA4**	**A302_9.3 P90 BX90LA4**	273
168	80	1.7	8.5	3420	**A102_8.5 S3 ME3SB4**	**A102_8.5 S3 MX3SB4**	264	**A102_8.5 P90 BE90LA4**	**A102_8.5 P90 BX90LA4**	265
171	79	2.7	8.4	3180	**A202_8.4 S3 ME3SB4**	**A202_8.4 S3 MX3SB4**	268	**A202_8.4 P90 BE90LA4**	**A202_8.4 P90 BX90LA4**	269
196	69	3.1	7.3	3080	**A202_7.3 S3 ME3SB4**	**A202_7.3 S3 MX3SB4**	268	**A202_7.3 P90 BE90LA4**	**A202_7.3 P90 BX90LA4**	269
198	68	2.1	7.2	2790	**A102_7.2 S3 ME3SB4**	**A102_7.2 S3 MX3SB4**	264	**A102_7.2 P90 BE90LA4**	**A102_7.2 P90 BX90LA4**	265
219	61	3.4	6.5	3000	**A202_6.5 S3 ME3SB4**	**A202_6.5 S3 MX3SB4**	268	**A202_6.5 P90 BE90LA4**	**A202_6.5 P90 BX90LA4**	269
226	60	2.4	6.3	3220	**A102_6.3 S3 ME3SB4**	**A102_6.3 S3 MX3SB4**	264	**A102_6.3 P90 BE90LA4**	**A102_6.3 P90 BX90LA4**	265
262	51	2.7	5.5	2630	**A102_5.5 S3 ME3SB4**	**A102_5.5 S3 MX3SB4**	264	**A102_5.5 P90 BE90LA4**	**A102_5.5 P90 BX90LA4**	265
297	45	3.1	9.6	2560	**A102_9.6 S3 ME3SA2**		264	**A102_9.6 P90 BE90SA2**		265
335	40	3.5	8.5	2950	**A102_8.5 S3 ME3SA2**		264	**A102_8.5 P90 BE90SA2**		265

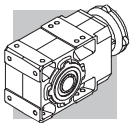

2.2 kW

n_2 min-1	M_2 Nm	S	i	R_{n2} N	IE2	IE3		IEC IE2	IEC IE3	
1.2	15990	0.9	1222	75000	**A904_1222 S3 ME3LA4**	**A904_1222 S3 MX3LA4**	302	**A904_1222 P100 BE100LA4**	**A904_1222 P100 BX100LA4**	303
1.3	14530	1.0	1111	75000	**A904_1111 S3 ME3LA4**	**A904_1111 S3 MX3LA4**	302	**A904_1111 P100 BE100LA4**	**A904_1111 P100 BX100LA4**	303
1.4	13412	1.0	1025	75000	**A904_1025 S3 ME3LA4**	**A904_1025 S3 MX3LA4**	302	**A904_1025 P100 BE100LA4**	**A904_1025 P100 BX100LA4**	303
1.5	12261	1.1	937.2	75000	**A904_937.2 S3 ME3LA4**	**A904_937.2 S3 MX3LA4**	302	**A904_937.2 P100 BE100LA4**	**A904_937.2 P100 BX100LA4**	303
1.7	11318	1.2	865.1	75000	**A904_865.1 S3 ME3LA4**	**A904_865.1 S3 MX3LA4**	302	**A904_865.1 P100 BE100LA4**	**A904_865.1 P100 BX100LA4**	303
1.9	10034	1.4	766.9	75000	**A904_766.9 S3 ME3LA4**	**A904_766.9 S3 MX3LA4**	302	**A904_766.9 P100 BE100LA4**	**A904_766.9 P100 BX100LA4**	303
2.0	9262	1.5	707.9	75000	**A904_707.9 S3 ME3LA4**	**A904_707.9 S3 MX3LA4**	302	**A904_707.9 P100 BE100LA4**	**A904_707.9 P100 BX100LA4**	303
2.0	9203	0.9	703.5	65000	**A804_703.5 S3 ME3LA4**	**A804_703.5 S3 MX3LA4**	299	**A804_703.5 P100 BE100LA4**	**A804_703.5 P100 BX100LA4**	300
2.4	7943	1.0	607.2	65000	**A804_607.2 S3 ME3LA4**	**A804_607.2 S3 MX3LA4**	299	**A804_607.2 P100 BE100LA4**	**A804_607.2 P100 BX100LA4**	300
2.4	7870	1.8	601.6	75000	**A904_601.6 S3 ME3LA4**	**A904_601.6 S3 MX3LA4**	302	**A904_601.6 P100 BE100LA4**	**A904_601.6 P100 BX100LA4**	303
2.6	7332	1.1	560.5	65000	**A804_560.5 S3 ME3LA4**	**A804_560.5 S3 MX3LA4**	299	**A804_560.5 P100 BE100LA4**	**A804_560.5 P100 BX100LA4**	300
2.6	7265	1.9	555.3	75000	**A904_555.3 S3 ME3LA4**	**A904_555.3 S3 MX3LA4**	302	**A904_555.3 P100 BE100LA4**	**A904_555.3 P100 BX100LA4**	303
2.9	6366	2.2	486.6	75000	**A904_486.6 S3 ME3LA4**	**A904_486.6 S3 MX3LA4**	302	**A904_486.6 P100 BE100LA4**	**A904_486.6 P100 BX100LA4**	303
3.0	6266	1.3	478.9	65000	**A804_478.9 S3 ME3LA4**	**A804_478.9 S3 MX3LA4**	299	**A804_478.9 P100 BE100LA4**	**A804_478.9 P100 BX100LA4**	300
3.2	5876	2.4	449.2	75000	**A904_449.2 S3 ME3LA4**	**A904_449.2 S3 MX3LA4**	302	**A904_449.2 P100 BE100LA4**	**A904_449.2 P100 BX100LA4**	303
3.2	5784	1.4	442.1	65000	**A804_442.1 S3 ME3LA4**	**A804_442.1 S3 MX3LA4**	299	**A804_442.1 P100 BE100LA4**	**A804_442.1 P100 BX100LA4**	300
3.6	5235	1.0	400.2	50000	**A704_400.2 S3 ME3LA4**	**A704_400.2 S3 MX3LA4**	296	**A704_400.2 P100 BE100LA4**	**A704_400.2 P100 BX100LA4**	297
3.7	5043	2.8	385.4	75000	**A904_385.4 S3 ME3LA4**	**A904_385.4 S3 MX3LA4**	302	**A904_385.4 P100 BE100LA4**	**A904_385.4 P100 BX100LA4**	303
3.7	5017	1.6	383.5	65000	**A804_383.5 S3 ME3LA4**	**A804_383.5 S3 MX3LA4**	299	**A804_383.5 P100 BE100LA4**	**A804_383.5 P100 BX100LA4**	300
3.9	4833	1.0	369.4	50000	**A704_369.4 S3 ME3LA4**	**A704_369.4 S3 MX3LA4**	296	**A704_369.4 P100 BE100LA4**	**A704_369.4 P100 BX100LA4**	297
4.0	4655	3.0	355.8	75000	**A904_355.8 S3 ME3LA4**	**A904_355.8 S3 MX3LA4**	302	**A904_355.8 P100 BE100LA4**	**A904_355.8 P100 BX100LA4**	303
4.0	4631	1.7	354.0	65000	**A804_354.0 S3 ME3LA4**	**A804_354.0 S3 MX3LA4**	299	**A804_354.0 P100 BE100LA4**	**A804_354.0 P100 BX100LA4**	300
4.5	4139	1.2	316.4	50000	**A704_316.4 S3 ME3LA4**	**A704_316.4 S3 MX3LA4**	296	**A704_316.4 P100 BE100LA4**	**A704_316.4 P100 BX100LA4**	297
4.7	3989	3.5	304.9	75000	**A904_304.9 S3 ME3LA4**	**A904_304.9 S3 MX3LA4**	302	**A904_304.9 P100 BE100LA4**	**A904_304.9 P100 BX100LA4**	303
4.8	3930	2.0	300.4	65000	**A804_300.4 S3 ME3LA4**	**A804_300.4 S3 MX3LA4**	299	**A804_300.4 P100 BE100LA4**	**A804_300.4 P100 BX100LA4**	300
4.9	3820	1.3	292.0	50000	**A704_292.0 S3 ME3LA4**	**A704_292.0 S3 MX3LA4**	296	**A704_292.0 P100 BE100LA4**	**A704_292.0 P100 BX100LA4**	297
5.2	3628	2.2	277.3	65000	**A804_277.3 S3 ME3LA4**	**A804_277.3 S3 MX3LA4**	299	**A804_277.3 P100 BE100LA4**	**A804_277.3 P100 BX100LA4**	300
6.0	3122	1.6	238.6	50000	**A704_238.6 S3 ME3LA4**	**A704_238.6 S3 MX3LA4**	296	**A704_238.6 P100 BE100LA4**	**A704_238.6 P100 BX100LA4**	297
6.1	3043	2.6	232.6	65000	**A804_232.6 S3 ME3LA4**	**A804_232.6 S3 MX3LA4**	299	**A804_232.6 P100 BE100LA4**	**A804_232.6 P100 BX100LA4**	300
6.3	2958	0.9	226.1	30000	**A604_226.1 S3 ME3LA4**	**A604_226.1 S3 MX3LA4**	292	**A604_226.1 P100 BE100LA4**	**A604_226.1 P100 BX100LA4**	293
6.5	2882	1.7	220.3	50000	**A704_220.3 S3 ME3LA4**	**A704_220.3 S3 MX3LA4**	296	**A704_220.3 P100 BE100LA4**	**A704_220.3 P100 BX100LA4**	297
6.7	2809	2.8	214.7	65000	**A804_214.7 S3 ME3LA4**	**A804_214.7 S3 MX3LA4**	299	**A804_214.7 P100 BE100LA4**	**A804_214.7 P100 BX100LA4**	300
6.9	2731	1.0	208.7	30000	**A604_208.7 S3 ME3LA4**	**A604_208.7 S3 MX3LA4**	292	**A604_208.7 P100 BE100LA4**	**A604_208.7 P100 BX100LA4**	293
7.7	2485	1.1	185.8	30000	**A603_185.8 S3 ME3LA4**	**A603_185.8 S3 MX3LA4**	292	**A603_185.8 P100 BE100LA4**	**A603_185.8 P100 BX100LA4**	293
7.8	2406	2.1	183.9	50000	**A704_183.9 S3 ME3LA4**	**A704_183.9 S3 MX3LA4**	296	**A704_183.9 P100 BE100LA4**	**A704_183.9 P100 BX100LA4**	297
8.3	2294	1.2	171.5	30000	**A603_171.5 S3 ME3LA4**	**A603_171.5 S3 MX3LA4**	292	**A603_171.5 P100 BE100LA4**	**A603_171.5 P100 BX100LA4**	293
8.3	2241	3.6	171.3	65000	**A804_171.3 S3 ME3LA4**	**A804_171.3 S3 MX3LA4**	299	**A804_171.3 P100 BE100LA4**	**A804_171.3 P100 BX100LA4**	300
8.4	2221	2.3	169.8	50000	**A704_169.8 S3 ME3LA4**	**A704_169.8 S3 MX3LA4**	296	**A704_169.8 P100 BE100LA4**	**A704_169.8 P100 BX100LA4**	297
8.9	2146	0.9	160.4	30000	**A553_160.4 S3 ME3LA4**	**A553_160.4 S3 MX3LA4**	288	**A553_160.4 P100 BE100LA4**	**A553_160.4 P100 BX100LA4**	289
9.2	2087	1.3	156.0	30000	**A603_156.0 S3 ME3LA4**	**A603_156.0 S3 MX3LA4**	292	**A603_156.0 P100 BE100LA4**	**A603_156.0 P100 BX100LA4**	293
9.3	2056	2.0	153.7	50000	**A703_153.7 S3 ME3LA4**	**A703_153.7 S3 MX3LA4**	296	**A703_153.7 P100 BE100LA4**	**A703_153.7 P100 BX100LA4**	297
9.7	1964	1.0	146.8	30000	**A553_146.8 S3 ME3LA4**	**A553_146.8 S3 MX3LA4**	288	**A553_146.8 P100 BE100LA4**	**A553_146.8 P100 BX100LA4**	289
9.9	1927	1.5	144.0	30000	**A603_144.0 S3 ME3LA4**	**A603_144.0 S3 MX3LA4**	292	**A603_144.0 P100 BE100LA4**	**A603_144.0 P100 BX100LA4**	293
10.1	1898	2.6	141.9	50000	**A703_141.9 S3 ME3LA4**	**A703_141.9 S3 MX3LA4**	296	**A703_141.9 P100 BE100LA4**	**A703_141.9 P100 BX100LA4**	297
10.7	1783	1.6	133.3	30000	**A603_133.3 S3 ME3LA4**	**A603_133.3 S3 MX3LA4**	292	**A603_133.3 P100 BE100LA4**	**A603_133.3 P100 BX100LA4**	293
10.8	1776	1.1	132.7	30000	**A553_132.7 S3 ME3LA4**	**A553_132.7 S3 MX3LA4**	288	**A553_132.7 P100 BE100LA4**	**A553_132.7 P100 BX100LA4**	289
10.9	1748	2.9	130.7	50000	**A703_130.7 S3 ME3LA4**	**A703_130.7 S3 MX3LA4**	296	**A703_130.7 P100 BE100LA4**	**A703_130.7 P100 BX100LA4**	297
11.5	1657	1.2	123.9	30000	**A553_123.9 S3 ME3LA4**	**A553_123.9 S3 MX3LA4**	288	**A553_123.9 P100 BE100LA4**	**A553_123.9 P100 BX100LA4**	289
11.6	1646	1.7	123.0	30000	**A603_123.0 S3 ME3LA4**	**A603_123.0 S3 MX3LA4**	292	**A603_123.0 P100 BE100LA4**	**A603_123.0 P100 BX100LA4**	293
11.9	1613	3.1	120.6	50000	**A703_120.6 S3 ME3LA4**	**A703_120.6 S3 MX3LA4**	296	**A703_120.6 P100 BE100LA4**	**A703_120.6 P100 BX100LA4**	297
12.1	1578	1.0	118.0	20000	**A503_118.0 S3 ME3LA4**	**A503_118.0 S3 MX3LA4**	284	**A503_118.0 P100 BE100LA4**	**A503_118.0 P100 BX100LA4**	285
13.1	1464	1.0	109.4	20000	**A503_109.4 S3 ME3LA4**	**A503_109.4 S3 MX3LA4**	284	**A503_109.4 P100 BE100LA4**	**A503_109.4 P100 BX100LA4**	285
13.3	1442	1.9	107.8	30000	**A603_107.8 S3 ME3LA4**	**A603_107.8 S3 MX3LA4**	292	**A603_107.8 P100 BE100LA4**	**A603_107.8 P100 BX100LA4**	293
13.7	1394	3.6	104.2	50000	**A703_104.2 S3 ME3LA4**	**A703_104.2 S3 MX3LA4**	296	**A703_104.2 P100 BE100LA4**	**A703_104.2 P100 BX100LA4**	297
14.1	1356	1.5	101.4	30000	**A553_101.4 S3 ME3LA4**	**A553_101.4 S3 MX3LA4**	288	**A553_101.4 P100 BE100LA4**	**A553_101.4 P100 BX100LA4**	289
14.4	1331	1.1	99.5	20000	**A503_99.5 S3 ME3LA4**	**A503_99.5 S3 MX3LA4**	284	**A503_99.5 P100 BE100LA4**	**A503_99.5 P100 BX100LA4**	285
14.4	1331	2.1	99.5	30000	**A603_99.5 S3 ME3LA4**	**A603_99.5 S3 MX3LA4**	292	**A603_99.5 P100 BE100LA4**	**A603_99.5 P100 BX100LA4**	293

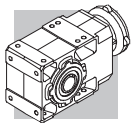

2.2 kW

n_2 min-1	M_2 Nm	S	i	R_{n2} N	IE2	IE3		IEC IE2	IEC IE3	
16.0	1198	1.3	89.5	19800	**A503_89.5 S3 ME3LA4**	**A503_89.5 S3 MX3LA4**	284	**A503_89.5 P100 BE100LA4**	**A503_89.5 P100 BX100LA4**	285
16.6	1155	2.4	86.4	30000	**A603_86.4 S3 ME3LA4**	**A603_86.4 S3 MX3LA4**	292	**A603_86.4 P100 BE100LA4**	**A603_86.4 P100 BX100LA4**	293
17.6	1090	1.4	81.5	19600	**A503_81.5 S3 ME3LA4**	**A503_81.5 S3 MX3LA4**	284	**A503_81.5 P100 BE100LA4**	**A503_81.5 P100 BX100LA4**	285
17.9	1066	2.6	79.7	30000	**A603_79.7 S3 ME3LA4**	**A603_79.7 S3 MX3LA4**	292	**A603_79.7 P100 BE100LA4**	**A603_79.7 P100 BX100LA4**	293
18.0	1064	1.9	79.5	30000	**A553_79.5 S3 ME3LA4**	**A553_79.5 S3 MX3LA4**	288	**A553_79.5 P100 BE100LA4**	**A553_79.5 P100 BX100LA4**	289
20.3	942	3.0	70.4	30000	**A603_70.4 S3 ME3LA4**	**A603_70.4 S3 MX3LA4**	292	**A603_70.4 P100 BE100LA4**	**A603_70.4 P100 BX100LA4**	293
20.4	940	1.6	70.2	19300	**A503_70.2 S3 ME3LA4**	**A503_70.2 S3 MX3LA4**	284	**A503_70.2 P100 BE100LA4**	**A503_70.2 P100 BX100LA4**	285
22.0	869	3.2	65.0	30000	**A603_65.0 S3 ME3LA4**	**A603_65.0 S3 MX3LA4**	292	**A603_65.0 P100 BE100LA4**	**A603_65.0 P100 BX100LA4**	293
22.2	860	2.3	64.3	30000	**A553_64.3 S3 ME3LA4**	**A553_64.3 S3 MX3LA4**	288	**A553_64.3 P100 BE100LA4**	**A553_64.3 P100 BX100LA4**	289
22.3	887	1.0	64.2	14500	**A412_64.2 S3 ME3LA4**	**A412_64.2 S3 MX3LA4**	280	**A412_64.2 P100 BE100LA4**	**A412_64.2 P100 BX100LA4**	281
22.4	855	1.8	63.9	19000	**A503_63.9 S3 ME3LA4**	**A503_63.9 S3 MX3LA4**	284	**A503_63.9 P100 BE100LA4**	**A503_63.9 P100 BX100LA4**	285
24.3	813	1.0	58.8	14400	**A412_58.8 S3 ME3LA4**	**A412_58.8 S3 MX3LA4**	280	**A412_58.8 P100 BE100LA4**	**A412_58.8 P100 BX100LA4**	281
25.2	760	2.0	56.8	18600	**A503_56.8 S3 ME3LA4**	**A503_56.8 S3 MX3LA4**	284	**A503_56.8 P100 BE100LA4**	**A503_56.8 P100 BX100LA4**	285
26.9	734	1.2	53.1	14100	**A412_53.1 S3 ME3LA4**	**A412_53.1 S3 MX3LA4**	280	**A412_53.1 P100 BE100LA4**	**A412_53.1 P100 BX100LA4**	281
27.7	691	2.2	51.7	18300	**A503_51.7 S3 ME3LA4**	**A503_51.7 S3 MX3LA4**	284	**A503_51.7 P100 BE100LA4**	**A503_51.7 P100 BX100LA4**	285
28.1	682	2.9	51.0	30000	**A553_51.0 S3 ME3LA4**	**A553_51.0 S3 MX3LA4**	288	**A553_51.0 P100 BE100LA4**	**A553_51.0 P100 BX100LA4**	289
29.1	678	0.9	49.1	9900	**A352_49.1 S3 ME3LA4**	**A352_49.1 S3 MX3LA4**	276	**A352_49.1 P100 BE100LA4**	**A352_49.1 P100 BX100LA4**	277
29.6	667	1.3	48.3	13900	**A412_48.3 S3 ME3LA4**	**A412_48.3 S3 MX3LA4**	280	**A412_48.3 P100 BE100LA4**	**A412_48.3 P100 BX100LA4**	281
31	633	0.9	45.8	9840	**A352_45.8 S3 ME3LA4**	**A352_45.8 S3 MX3LA4**	276	**A352_45.8 P100 BE100LA4**	**A352_45.8 P100 BX100LA4**	277
32	623	1.3	45.1	13700	**A412_45.1 S3 ME3LA4**	**A412_45.1 S3 MX3LA4**	280	**A412_45.1 P100 BE100LA4**	**A412_45.1 P100 BX100LA4**	281
32	602	2.5	45.0	17900	**A503_45.0 S3 ME3LA4**	**A503_45.0 S3 MX3LA4**	284	**A503_45.0 P100 BE100LA4**	**A503_45.0 P100 BX100LA4**	285
34	577	1.0	41.8	9750	**A352_41.8 S3 ME3LA4**	**A352_41.8 S3 MX3LA4**	276	**A352_41.8 P100 BE100LA4**	**A352_41.8 P100 BX100LA4**	277
35	548	2.7	40.9	17500	**A503_40.9 S3 ME3LA4**	**A503_40.9 S3 MX3LA4**	284	**A503_40.9 P100 BE100LA4**	**A503_40.9 P100 BX100LA4**	285
39	506	1.2	36.6	9600	**A352_36.6 S3 ME3LA4**	**A352_36.6 S3 MX3LA4**	276	**A352_36.6 P100 BE100LA4**	**A352_36.6 P100 BX100LA4**	277
40	496	1.6	35.9	13100	**A412_35.9 S3 ME3LA4**	**A412_35.9 S3 MX3LA4**	280	**A412_35.9 P100 BE100LA4**	**A412_35.9 P100 BX100LA4**	281
40	476	3.1	35.6	17000	**A503_35.6 S3 ME3LA4**	**A503_35.6 S3 MX3LA4**	284	**A503_35.6 P100 BE100LA4**	**A503_35.6 P100 BX100LA4**	285
43	462	0.9	33.4	5050	**A302_33.4 S3 ME3LA4**	**A302_33.4 S3 MX3LA4**	272	**A302_33.4 P100 BE100LA4**	**A302_33.4 P100 BX100LA4**	273
43	458	1.3	33.2	9460	**A352_33.2 S3 ME3LA4**	**A352_33.2 S3 MX3LA4**	276	**A352_33.2 P100 BE100LA4**	**A352_33.2 P100 BX100LA4**	277
44	433	3.5	32.4	16600	**A503_32.4 S3 ME3LA4**	**A503_32.4 S3 MX3LA4**	284	**A503_32.4 P100 BE100LA4**	**A503_32.4 P100 BX100LA4**	285
49	405	1.0	29.3	5380	**A302_29.3 S3 ME3LA4**	**A302_29.3 S3 MX3LA4**	272	**A302_29.3 P100 BE100LA4**	**A302_29.3 P100 BX100LA4**	273
50	393	1.5	28.4	9230	**A352_28.4 S3 ME3LA4**	**A352_28.4 S3 MX3LA4**	276	**A352_28.4 P100 BE100LA4**	**A352_28.4 P100 BX100LA4**	277
50	391	1.9	28.3	12400	**A412_28.3 S3 ME3LA4**	**A412_28.3 S3 MX3LA4**	280	**A412_28.3 P100 BE100LA4**	**A412_28.3 P100 BX100LA4**	281
54	367	1.1	26.5	5350	**A302_26.5 S3 ME3LA4**	**A302_26.5 S3 MX3LA4**	272	**A302_26.5 P100 BE100LA4**	**A302_26.5 P100 BX100LA4**	273
56	355	1.7	25.7	9070	**A352_25.7 S3 ME3LA4**	**A352_25.7 S3 MX3LA4**	276	**A352_25.7 P100 BE100LA4**	**A352_25.7 P100 BX100LA4**	277
63	314	1.3	22.8	5290	**A302_22.8 S3 ME3LA4**	**A302_22.8 S3 MX3LA4**	272	**A302_22.8 P100 BE100LA4**	**A302_22.8 P100 BX100LA4**	273
63	313	2.2	22.7	11700	**A412_22.7 S3 ME3LA4**	**A412_22.7 S3 MX3LA4**	280	**A412_22.7 P100 BE100LA4**	**A412_22.7 P100 BX100LA4**	281
64	311	1.9	22.5	8840	**A352_22.5 S3 ME3LA4**	**A352_22.5 S3 MX3LA4**	276	**A352_22.5 P100 BE100LA4**	**A352_22.5 P100 BX100LA4**	277
70	284	1.4	20.5	5230	**A302_20.5 S3 ME3LA4**	**A302_20.5 S3 MX3LA4**	272	**A302_20.5 P100 BE100LA4**	**A302_20.5 P100 BX100LA4**	273
70	282	2.1	20.4	8660	**A352_20.4 S3 ME3LA4**	**A352_20.4 S3 MX3LA4**	276	**A352_20.4 P100 BE100LA4**	**A352_20.4 P100 BX100LA4**	277
79	250	1.0	18.1	3140	**A202_18.1 S3 ME3LA4**	**A202_18.1 S3 MX3LA4**	268	**A202_18.1 P100 BE100LA4**	**A202_18.1 P100 BX100LA4**	269
80	249	1.6	18.0	5140	**A302_18.0 S3 ME3LA4**	**A302_18.0 S3 MX3LA4**	272	**A302_18.0 P100 BE100LA4**	**A302_18.0 P100 BX100LA4**	273
81	245	2.6	17.8	11000	**A412_17.8 S3 ME3LA4**	**A412_17.8 S3 MX3LA4**	280	**A412_17.8 P100 BE100LA4**	**A412_17.8 P100 BX100LA4**	281
84	234	2.6	17.0	8320	**A352_17.0 S3 ME3LA4**	**A352_17.0 S3 MX3LA4**	276	**A352_17.0 P100 BE100LA4**	**A352_17.0 P100 BX100LA4**	277
88	226	1.7	16.3	5060	**A302_16.3 S3 ME3LA4**	**A302_16.3 S3 MX3LA4**	272	**A302_16.3 P100 BE100LA4**	**A302_16.3 P100 BX100LA4**	273
88	223	1.1	16.2	3140	**A202_16.2 S3 ME3LA4**	**A202_16.2 S3 MX3LA4**	268	**A202_16.2 P100 BE100LA4**	**A202_16.2 P100 BX100LA4**	269
89	222	2.7	16.1	10800	**A412_16.1 S3 ME3LA4**	**A412_16.1 S3 MX3LA4**	280	**A412_16.1 P100 BE100LA4**	**A412_16.1 P100 BX100LA4**	281
92	214	2.8	15.5	8150	**A352_15.5 S3 ME3LA4**	**A352_15.5 S3 MX3LA4**	276	**A352_15.5 P100 BE100LA4**	**A352_15.5 P100 BX100LA4**	277
102	194	1.3	14.1	3120	**A202_14.1 S3 ME3LA4**	**A202_14.1 S3 MX3LA4**	268	**A202_14.1 P100 BE100LA4**	**A202_14.1 P100 BX100LA4**	269
104	190	3.1	13.8	10300	**A412_13.8 S3 ME3LA4**	**A412_13.8 S3 MX3LA4**	280	**A412_13.8 P100 BE100LA4**	**A412_13.8 P100 BX100LA4**	281
105	187	2.0	13.6	4900	**A302_13.6 S3 ME3LA4**	**A302_13.6 S3 MX3LA4**	272	**A302_13.6 P100 BE100LA4**	**A302_13.6 P100 BX100LA4**	273
109	181	3.3	13.1	7820	**A352_13.1 S3 ME3LA4**	**A352_13.1 S3 MX3LA4**	276	**A352_13.1 P100 BE100LA4**	**A352_13.1 P100 BX100LA4**	277
120	165	1.3	12.0	3070	**A202_12.0 S3 ME3LA4**	**A202_12.0 S3 MX3LA4**	268	**A202_12.0 P100 BE100LA4**	**A202_12.0 P100 BX100LA4**	269
121	163	1.8	11.8	4750	**A302_11.8 S3 ME3LA4**	**A302_11.8 S3 MX3LA4**	272	**A302_11.8 P100 BE100LA4**	**A302_11.8 P100 BX100LA4**	273
121	163	2.5	11.8	7710	**A352_11.8 S3 ME3LA4**	**A352_11.8 S3 MX3LA4**	276	**A352_11.8 P100 BE100LA4**	**A352_11.8 P100 BX100LA4**	277
122	162	3.4	11.7	9870	**A412_11.7 S3 ME3LA4**	**A412_11.7 S3 MX3LA4**	280	**A412_11.7 P100 BE100LA4**	**A412_11.7 P100 BX100LA4**	281
124	159	2.0	23.1	3070	**A202_23.1 S3 ME3LA2**		268	**A202_23.1 P90 BE90L2**		269
134	147	2.7	10.6	7510	**A352_10.6 S3 ME3LA4**	**A352_10.6 S3 MX3LA4**	276	**A352_10.6 P100 BE100LA4**	**A352_10.6 P100 BX100LA4**	277

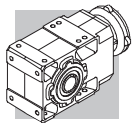

2.2 kW

n_2 min^{-1}	M_2 Nm	S	i	R_{n2} N	IE2	IE3		IEC IE2	IEC IE3	
135	146	1.0	10.6	2600	**A102_10.6 S3 ME3LA4**	**A102_10.6 S3 MX3LA4**	264	**A102_10.6 P100 BE100LA4**	**A102_10.6 P100 BX100LA4**	265
137	144	2.4	10.5	4660	**A302_10.5 S3 ME3LA4**	**A302_10.5 S3 MX3LA4**	272	**A302_10.5 P100 BE100LA4**	**A302_10.5 P100 BX100LA4**	273
138	143	1.6	10.3	3030	**A202_10.3 S3 ME3LA4**	**A202_10.3 S3 MX3LA4**	268	**A202_10.3 P100 BE100LA4**	**A202_10.3 P100 BX100LA4**	269
149	133	1.1	9.6	2580	**A102_9.6 S3 ME3LA4**	**A102_9.6 S3 MX3LA4**	264	**A102_9.6 P100 BE100LA4**	**A102_9.6 P100 BX100LA4**	265
153	130	1.6	9.4	2980	**A202_9.4 S3 ME3LA4**	**A202_9.4 S3 MX3LA4**	268	**A202_9.4 P100 BE100LA4**	**A202_9.4 P100 BX100LA4**	269
154	129	2.3	9.3	4530	**A302_9.3 S3 ME3LA4**	**A302_9.3 S3 MX3LA4**	272	**A302_9.3 P100 BE100LA4**	**A302_9.3 P100 BX100LA4**	273
154	129	3.1	9.3	7240	**A352_9.3 S3 ME3LA4**	**A352_9.3 S3 MX3LA4**	276	**A352_9.3 P100 BE100LA4**	**A352_9.3 P100 BX100LA4**	277
168	118	1.2	8.5	3050	**A102_8.5 S3 ME3LA4**	**A102_8.5 S3 MX3LA4**	264	**A102_8.5 P100 BE100LA4**	**A102_8.5 P100 BX100LA4**	265
169	117	2.6	8.5	4430	**A302_8.5 S3 ME3LA4**	**A302_8.5 S3 MX3LA4**	272	**A302_8.5 P100 BE100LA4**	**A302_8.5 P100 BX100LA4**	273
169	117	3.3	8.5	7060	**A352_8.5 S3 ME3LA4**	**A352_8.5 S3 MX3LA4**	276	**A352_8.5 P100 BE100LA4**	**A352_8.5 P100 BX100LA4**	277
171	116	1.8	8.4	2930	**A202_8.4 S3 ME3LA4**	**A202_8.4 S3 MX3LA4**	268	**A202_8.4 P100 BE100LA4**	**A202_8.4 P100 BX100LA4**	269
196	101	2.1	7.3	2860	**A202_7.3 S3 ME3LA4**	**A202_7.3 S3 MX3LA4**	268	**A202_7.3 P100 BE100LA4**	**A202_7.3 P100 BX100LA4**	269
198	100	1.4	7.2	2520	**A102_7.2 S3 ME3LA4**	**A102_7.2 S3 MX3LA4**	264	**A102_7.2 P100 BE100LA4**	**A102_7.2 P100 BX100LA4**	265
204	97	3.1	7.0	4240	**A302_7.0 S3 ME3LA4**	**A302_7.0 S3 MX3LA4**	272	**A302_7.0 P100 BE100LA4**	**A302_7.0 P100 BX100LA4**	273
219	90	2.3	6.5	2810	**A202_6.5 S3 ME3LA4**	**A202_6.5 S3 MX3LA4**	268	**A202_6.5 P100 BE100LA4**	**A202_6.5 P100 BX100LA4**	269
223	89	3.4	6.4	4150	**A302_6.4 S3 ME3LA4**	**A302_6.4 S3 MX3LA4**	272	**A302_6.4 P100 BE100LA4**	**A302_6.4 P100 BX100LA4**	273
226	88	1.6	6.3	2950	**A102_6.3 S3 ME3LA4**	**A102_6.3 S3 MX3LA4**	264	**A102_6.3 P100 BE100LA4**	**A102_6.3 P100 BX100LA4**	265
262	76	1.9	5.5	2430	**A102_5.5 S3 ME3LA4**	**A102_5.5 S3 MX3LA4**	264	**A102_5.5 P100 BE100LA4**	**A102_5.5 P100 BX100LA4**	265
267	74	2.8	5.4	2700	**A202_5.4 S3 ME3LA4**	**A202_5.4 S3 MX3LA4**	268	**A202_5.4 P100 BE100LA4**	**A202_5.4 P100 BX100LA4**	269
306	65	3.2	9.4	2620	**A202_9.4 S3 ME3LA2**		268	**A202_9.4 P90 BE90L2**		269

3 kW

n_2 min^{-1}	M_2 Nm	S	i	R_{n2} N	IE2	IE3		IEC IE2	IEC IE3	
1.7	15399	0.9	865.1	75000	**A904_865.1 S3 ME3LB4**	**A904_865.1 S3 MX3LB4**	302	**A904_865.1 P100 BE100LB4**	**A904_865.1 P100 BX100LB4**	303
1.9	13651	1.0	766.9	75000	**A904_766.9 S3 ME3LB4**	**A904_766.9 S3 MX3LB4**	302	**A904_766.9 P100 BE100LB4**	**A904_766.9 P100 BX100LB4**	303
2.0	12601	1.1	707.9	75000	**A904_707.9 S3 ME3LB4**	**A904_707.9 S3 MX3LB4**	302	**A904_707.9 P100 BE100LB4**	**A904_707.9 P100 BX100LB4**	303
2.4	10708	1.3	601.6	75000	**A904_601.6 S3 ME3LB4**	**A904_601.6 S3 MX3LB4**	302	**A904_601.6 P100 BE100LB4**	**A904_601.6 P100 BX100LB4**	303
2.6	9884	1.4	555.3	75000	**A904_555.3 S3 ME3LB4**	**A904_555.3 S3 MX3LB4**	302	**A904_555.3 P100 BE100LB4**	**A904_555.3 P100 BX100LB4**	303
3.0	8661	1.6	486.6	75000	**A904_486.6 S3 ME3LB4**	**A904_486.6 S3 MX3LB4**	302	**A904_486.6 P100 BE100LB4**	**A904_486.6 P100 BX100LB4**	303
3.0	8525	0.9	478.9	65000	**A804_478.9 S3 ME3LB4**	**A804_478.9 S3 MX3LB4**	299	**A804_478.9 P100 BE100LB4**	**A804_478.9 P100 BX100LB4**	300
3.2	7995	1.8	449.2	75000	**A904_449.2 S3 ME3LB4**	**A904_449.2 S3 MX3LB4**	302	**A904_449.2 P100 BE100LB4**	**A904_449.2 P100 BX100LB4**	303
3.3	7869	1.0	442.1	65000	**A804_442.1 S3 ME3LB4**	**A804_442.1 S3 MX3LB4**	299	**A804_442.1 P100 BE100LB4**	**A804_442.1 P100 BX100LB4**	300
3.7	6861	2.0	385.4	75000	**A904_385.4 S3 ME3LB4**	**A904_385.4 S3 MX3LB4**	302	**A904_385.4 P100 BE100LB4**	**A904_385.4 P100 BX100LB4**	303
3.8	6826	1.2	383.5	65000	**A804_383.5 S3 ME3LB4**	**A804_383.5 S3 MX3LB4**	299	**A804_383.5 P100 BE100LB4**	**A804_383.5 P100 BX100LB4**	300
4.0	6333	2.2	355.8	75000	**A904_355.8 S3 ME3LB4**	**A904_355.8 S3 MX3LB4**	302	**A904_355.8 P100 BE100LB4**	**A904_355.8 P100 BX100LB4**	303
4.1	6301	1.3	354.0	65000	**A804_354.0 S3 ME3LB4**	**A804_354.0 S3 MX3LB4**	299	**A804_354.0 P100 BE100LB4**	**A804_354.0 P100 BX100LB4**	300
4.6	5631	0.9	316.4	50000	**A704_316.4 S3 ME3LB4**	**A704_316.4 S3 MX3LB4**	296	**A704_316.4 P100 BE100LB4**	**A704_316.4 P100 BX100LB4**	297
4.7	5427	2.6	304.9	75000	**A904_304.9 S3 ME3LB4**	**A904_304.9 S3 MX3LB4**	302	**A904_304.9 P100 BE100LB4**	**A904_304.9 P100 BX100LB4**	303
4.8	5347	1.5	300.4	65000	**A804_300.4 S3 ME3LB4**	**A804_300.4 S3 MX3LB4**	299	**A804_300.4 P100 BE100LB4**	**A804_300.4 P100 BX100LB4**	300
4.9	5198	1.0	292.0	50000	**A704_292.0 S3 ME3LB4**	**A704_292.0 S3 MX3LB4**	296	**A704_292.0 P100 BE100LB4**	**A704_292.0 P100 BX100LB4**	297
5.1	5010	2.8	281.4	75000	**A904_281.4 S3 ME3LB4**	**A904_281.4 S3 MX3LB4**	302	**A904_281.4 P100 BE100LB4**	**A904_281.4 P100 BX100LB4**	303
5.2	4936	1.6	277.3	65000	**A804_277.3 S3 ME3LB4**	**A804_277.3 S3 MX3LB4**	299	**A804_277.3 P100 BE100LB4**	**A804_277.3 P100 BX100LB4**	300
6.0	4247	1.2	238.6	50000	**A704_238.6 S3 ME3LB4**	**A704_238.6 S3 MX3LB4**	296	**A704_238.6 P100 BE100LB4**	**A704_238.6 P100 BX100LB4**	297
6.2	4141	1.9	232.6	65000	**A804_232.6 S3 ME3LB4**	**A804_232.6 S3 MX3LB4**	299	**A804_232.6 P100 BE100LB4**	**A804_232.6 P100 BX100LB4**	300
6.4	4030	3.5	226.4	75000	**A904_226.4 S3 ME3LB4**	**A904_226.4 S3 MX3LB4**	302	**A904_226.4 P100 BE100LB4**	**A904_226.4 P100 BX100LB4**	303
6.5	3921	1.3	220.3	50000	**A704_220.3 S3 ME3LB4**	**A704_220.3 S3 MX3LB4**	296	**A704_220.3 P100 BE100LB4**	**A704_220.3 P100 BX100LB4**	297
6.7	3822	2.1	214.7	65000	**A804_214.7 S3 ME3LB4**	**A804_214.7 S3 MX3LB4**	299	**A804_214.7 P100 BE100LB4**	**A804_214.7 P100 BX100LB4**	300
7.8	3273	1.5	183.9	50000	**A704_183.9 S3 ME3LB4**	**A704_183.9 S3 MX3LB4**	296	**A704_183.9 P100 BE100LB4**	**A704_183.9 P100 BX100LB4**	297
8.4	3121	0.9	171.5	30000	**A603_171.5 S3 ME3LB4**	**A603_171.5 S3 MX3LB4**	292	**A603_171.5 P100 BE100LB4**	**A603_171.5 P100 BX100LB4**	293
8.4	3049	2.6	171.3	65000	**A804_171.3 S3 ME3LB4**	**A804_171.3 S3 MX3LB4**	299	**A804_171.3 P100 BE100LB4**	**A804_171.3 P100 BX100LB4**	300
8.5	3022	1.7	169.8	50000	**A704_169.8 S3 ME3LB4**	**A704_169.8 S3 MX3LB4**	296	**A704_169.8 P100 BE100LB4**	**A704_169.8 P100 BX100LB4**	297

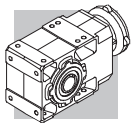

3 kW

n_2 min-1	M_2 Nm	S	i	R_{n2} N	IE2	IE3		IEC IE2	IEC IE3	
9.2	2854	2.8	156.8	65000	**A803_156.8 S3 ME3LB4**	**A803_156.8 S3 MX3LB4**	299	**A803_156.8 P100 BE100LB4**	**A803_156.8 P100 BX100LB4**	300
9.2	2840	1.0	156.0	30000	**A603_156.0 S3 ME3LB4**	**A603_156.0 S3 MX3LB4**	292	**A603_156.0 P100 BE100LB4**	**A603_156.0 P100 BX100LB4**	293
9.4	2797	1.4	153.7	50000	**A703_153.7 S3 ME3LB4**	**A703_153.7 S3 MX3LB4**	296	**A703_153.7 P100 BE100LB4**	**A703_153.7 P100 BX100LB4**	297
9.9	2634	3.0	144.7	65000	**A803_144.7 S3 ME3LB4**	**A803_144.7 S3 MX3LB4**	299	**A803_144.7 P100 BE100LB4**	**A803_144.7 P100 BX100LB4**	300
10.0	2622	1.1	144.0	30000	**A603_144.0 S3 ME3LB4**	**A603_144.0 S3 MX3LB4**	292	**A603_144.0 P100 BE100LB4**	**A603_144.0 P100 BX100LB4**	293
10.2	2582	1.9	141.9	50000	**A703_141.9 S3 ME3LB4**	**A703_141.9 S3 MX3LB4**	296	**A703_141.9 P100 BE100LB4**	**A703_141.9 P100 BX100LB4**	297
10.8	2426	1.2	133.3	30000	**A603_133.3 S3 ME3LB4**	**A603_133.3 S3 MX3LB4**	292	**A603_133.3 P100 BE100LB4**	**A603_133.3 P100 BX100LB4**	293
11.0	2378	2.1	130.7	50000	**A703_130.7 S3 ME3LB4**	**A703_130.7 S3 MX3LB4**	296	**A703_130.7 P100 BE100LB4**	**A703_130.7 P100 BX100LB4**	297
11.5	2286	3.5	125.6	65000	**A803_125.6 S3 ME3LB4**	**A803_125.6 S3 MX3LB4**	299	**A803_125.6 P100 BE100LB4**	**A803_125.6 P100 BX100LB4**	300
11.6	2255	0.9	123.9	30000	**A553_123.9 S3 ME3LB4**	**A553_123.9 S3 MX3LB4**	288	**A553_123.9 P100 BE100LB4**	**A553_123.9 P100 BX100LB4**	289
11.7	2239	1.3	123.0	30000	**A603_123.0 S3 ME3LB4**	**A603_123.0 S3 MX3LB4**	292	**A603_123.0 P100 BE100LB4**	**A603_123.0 P100 BX100LB4**	293
11.9	2195	2.3	120.6	50000	**A703_120.6 S3 ME3LB4**	**A703_120.6 S3 MX3LB4**	296	**A703_120.6 P100 BE100LB4**	**A703_120.6 P100 BX100LB4**	297
13.4	1962	1.4	107.8	30000	**A603_107.8 S3 ME3LB4**	**A603_107.8 S3 MX3LB4**	292	**A603_107.8 P100 BE100LB4**	**A603_107.8 P100 BX100LB4**	293
13.8	1897	2.6	104.2	50000	**A703_104.2 S3 ME3LB4**	**A703_104.2 S3 MX3LB4**	296	**A703_104.2 P100 BE100LB4**	**A703_104.2 P100 BX100LB4**	297
14.2	1845	1.1	101.4	30000	**A553_101.4 S3 ME3LB4**	**A553_101.4 S3 MX3LB4**	288	**A553_101.4 P100 BE100LB4**	**A553_101.4 P100 BX100LB4**	289
14.5	1811	1.5	99.5	30000	**A603_99.5 S3 ME3LB4**	**A603_99.5 S3 MX3LB4**	292	**A603_99.5 P100 BE100LB4**	**A603_99.5 P100 BX100LB4**	293
15.0	1751	2.9	96.2	50000	**A703_96.2 S3 ME3LB4**	**A703_96.2 S3 MX3LB4**	296	**A703_96.2 P100 BE100LB4**	**A703_96.2 P100 BX100LB4**	297
16.1	1630	0.9	89.5	17100	**A503_89.5 S3 ME3LB4**	**A503_89.5 S3 MX3LB4**	284	**A503_89.5 P100 BE100LB4**	**A503_89.5 P100 BX100LB4**	285
16.7	1572	1.8	86.4	30000	**A603_86.4 S3 ME3LB4**	**A603_86.4 S3 MX3LB4**	292	**A603_86.4 P100 BE100LB4**	**A603_86.4 P100 BX100LB4**	293
16.8	1564	3.2	85.9	50000	**A703_85.9 S3 ME3LB4**	**A703_85.9 S3 MX3LB4**	296	**A703_85.9 P100 BE100LB4**	**A703_85.9 P100 BX100LB4**	297
17.7	1482	1.0	81.5	17200	**A503_81.5 S3 ME3LB4**	**A503_81.5 S3 MX3LB4**	284	**A503_81.5 P100 BE100LB4**	**A503_81.5 P100 BX100LB4**	285
18.1	1451	1.9	79.7	30000	**A603_79.7 S3 ME3LB4**	**A603_79.7 S3 MX3LB4**	292	**A603_79.7 P100 BE100LB4**	**A603_79.7 P100 BX100LB4**	293
18.1	1447	1.4	79.5	30000	**A553_79.5 S3 ME3LB4**	**A553_79.5 S3 MX3LB4**	288	**A553_79.5 P100 BE100LB4**	**A553_79.5 P100 BX100LB4**	289
18.2	1444	3.5	79.3	50000	**A703_79.3 S3 ME3LB4**	**A703_79.3 S3 MX3LB4**	296	**A703_79.3 P100 BE100LB4**	**A703_79.3 P100 BX100LB4**	297
20.5	1281	2.2	70.4	30000	**A603_70.4 S3 ME3LB4**	**A603_70.4 S3 MX3LB4**	292	**A603_70.4 P100 BE100LB4**	**A603_70.4 P100 BX100LB4**	293
20.5	1278	1.2	70.2	17200	**A503_70.2 S3 ME3LB4**	**A503_70.2 S3 MX3LB4**	284	**A503_70.2 P100 BE100LB4**	**A503_70.2 P100 BX100LB4**	285
22.2	1183	2.4	65.0	30000	**A603_65.0 S3 ME3LB4**	**A603_65.0 S3 MX3LB4**	292	**A603_65.0 P100 BE100LB4**	**A603_65.0 P100 BX100LB4**	293
22.4	1171	1.7	64.3	30000	**A553_64.3 S3 ME3LB4**	**A553_64.3 S3 MX3LB4**	288	**A553_64.3 P100 BE100LB4**	**A553_64.3 P100 BX100LB4**	289
22.5	1163	1.3	63.9	17100	**A503_63.9 S3 ME3LB4**	**A503_63.9 S3 MX3LB4**	284	**A503_63.9 P100 BE100LB4**	**A503_63.9 P100 BX100LB4**	285
25.3	1034	1.5	56.8	17000	**A503_56.8 S3 ME3LB4**	**A503_56.8 S3 MX3LB4**	284	**A503_56.8 P100 BE100LB4**	**A503_56.8 P100 BX100LB4**	285
25.9	1012	2.8	55.6	30000	**A603_55.6 S3 ME3LB4**	**A603_55.6 S3 MX3LB4**	292	**A603_55.6 P100 BE100LB4**	**A603_55.6 P100 BX100LB4**	293
27.9	941	1.6	51.7	16800	**A503_51.7 S3 ME3LB4**	**A503_51.7 S3 MX3LB4**	284	**A503_51.7 P100 BE100LB4**	**A503_51.7 P100 BX100LB4**	285
28.1	934	3.0	51.3	30000	**A603_51.3 S3 ME3LB4**	**A603_51.3 S3 MX3LB4**	292	**A603_51.3 P100 BE100LB4**	**A603_51.3 P100 BX100LB4**	293
28.3	927	2.2	51.0	30000	**A553_51.0 S3 ME3LB4**	**A553_51.0 S3 MX3LB4**	288	**A553_51.0 P100 BE100LB4**	**A553_51.0 P100 BX100LB4**	289
29.8	908	0.9	48.3	12700	**A412_48.3 S3 ME3LB4**	**A412_48.3 S3 MX3LB4**	280	**A412_48.3 P100 BE100LB4**	**A412_48.3 P100 BX100LB4**	281
32	822	3.4	45.2	30000	**A603_45.2 S3 ME3LB4**	**A603_45.2 S3 MX3LB4**	292	**A603_45.2 P100 BE100LB4**	**A603_45.2 P100 BX100LB4**	293
32	847	1.0	45.1	12600	**A412_45.1 S3 ME3LB4**	**A412_45.1 S3 MX3LB4**	280	**A412_45.1 P100 BE100LB4**	**A412_45.1 P100 BX100LB4**	281
32	819	1.8	45.0	16500	**A503_45.0 S3 ME3LB4**	**A503_45.0 S3 MX3LB4**	284	**A503_45.0 P100 BE100LB4**	**A503_45.0 P100 BX100LB4**	285
35	745	2.0	40.9	16300	**A503_40.9 S3 ME3LB4**	**A503_40.9 S3 MX3LB4**	284	**A503_40.9 P100 BE100LB4**	**A503_40.9 P100 BX100LB4**	285
36	734	2.7	40.3	30000	**A553_40.3 S3 ME3LB4**	**A553_40.3 S3 MX3LB4**	288	**A553_40.3 P100 BE100LB4**	**A553_40.3 P100 BX100LB4**	289
39	689	0.9	36.6	8550	**A352_36.6 S3 ME3LB4**	**A352_36.6 S3 MX3LB4**	276	**A352_36.6 P100 BE100LB4**	**A352_36.6 P100 BX100LB4**	277
40	675	1.2	35.9	12200	**A412_35.9 S3 ME3LB4**	**A412_35.9 S3 MX3LB4**	280	**A412_35.9 P100 BE100LB4**	**A412_35.9 P100 BX100LB4**	281
40	648	2.3	35.6	16000	**A503_35.6 S3 ME3LB4**	**A503_35.6 S3 MX3LB4**	284	**A503_35.6 P100 BE100LB4**	**A503_35.6 P100 BX100LB4**	285
43	623	1.0	33.2	8520	**A352_33.2 S3 ME3LB4**	**A352_33.2 S3 MX3LB4**	276	**A352_33.2 P100 BE100LB4**	**A352_33.2 P100 BX100LB4**	277
44	589	2.5	32.4	15700	**A503_32.4 S3 ME3LB4**	**A503_32.4 S3 MX3LB4**	284	**A503_32.4 P100 BE100LB4**	**A503_32.4 P100 BX100LB4**	285
51	535	1.1	28.4	8420	**A352_28.4 S3 ME3LB4**	**A352_28.4 S3 MX3LB4**	276	**A352_28.4 P100 BE100LB4**	**A352_28.4 P100 BX100LB4**	277
51	532	1.4	28.3	11700	**A412_28.3 S3 ME3LB4**	**A412_28.3 S3 MX3LB4**	280	**A412_28.3 P100 BE100LB4**	**A412_28.3 P100 BX100LB4**	281
54	481	3.1	26.4	15100	**A503_26.4 S3 ME3LB4**	**A503_26.4 S3 MX3LB4**	284	**A503_26.4 P100 BE100LB4**	**A503_26.4 P100 BX100LB4**	285
56	483	1.2	25.7	8330	**A352_25.7 S3 ME3LB4**	**A352_25.7 S3 MX3LB4**	276	**A352_25.7 P100 BE100LB4**	**A352_25.7 P100 BX100LB4**	277
60	438	3.4	24.0	14800	**A503_24.0 S3 ME3LB4**	**A503_24.0 S3 MX3LB4**	284	**A503_24.0 P100 BE100LB4**	**A503_24.0 P100 BX100LB4**	285
63	428	1.0	22.8	4610	**A302_22.8 S3 ME3LB4**	**A302_22.8 S3 MX3LB4**	272	**A302_22.8 P100 BE100LB4**	**A302_22.8 P100 BX100LB4**	273
64	426	1.6	22.7	11200	**A412_22.7 S3 ME3LB4**	**A412_22.7 S3 MX3LB4**	280	**A412_22.7 P100 BE100LB4**	**A412_22.7 P100 BX100LB4**	281
64	423	1.4	22.5	8190	**A352_22.5 S3 ME3LB4**	**A352_22.5 S3 MX3LB4**	276	**A352_22.5 P100 BE100LB4**	**A352_22.5 P100 BX100LB4**	277
69	393	3.1	20.9	15500	**A502_20.9 S3 ME3LB4**	**A502_20.9 S3 MX3LB4**	284	**A502_20.9 P100 BE100LB4**	**A502_20.9 P100 BX100LB4**	285
70	386	1.1	20.5	4620	**A302_20.5 S3 ME3LB4**	**A302_20.5 S3 MX3LB4**	272	**A302_20.5 P100 BE100LB4**	**A302_20.5 P100 BX100LB4**	273

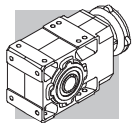

3 kW

n_2 min-1	M_2 Nm	S	i	R_{n2} N	IE2	IE3		IEC IE2	IEC IE3	
70	384	1.6	20.4	8080	**A352_20.4 S3 ME3LB4**	**A352_20.4 S3 MX3LB4**	276	**A352_20.4 P100 BE100LB4**	**A352_20.4 P100 BX100LB4**	277
80	338	1.2	18.0	4600	**A302_18.0 S3 ME3LB4**	**A302_18.0 S3 MX3LB4**	272	**A302_18.0 P100 BE100LB4**	**A302_18.0 P100 BX100LB4**	273
81	334	1.9	17.8	10600	**A412_17.8 S3 ME3LB4**	**A412_17.8 S3 MX3LB4**	280	**A412_17.8 P100 BE100LB4**	**A412_17.8 P100 BX100LB4**	281
85	319	1.9	17.0	7830	**A352_17.0 S3 ME3LB4**	**A352_17.0 S3 MX3LB4**	276	**A352_17.0 P100 BE100LB4**	**A352_17.0 P100 BX100LB4**	277
88	307	1.3	16.3	4580	**A302_16.3 S3 ME3LB4**	**A302_16.3 S3 MX3LB4**	272	**A302_16.3 P100 BE100LB4**	**A302_16.3 P100 BX100LB4**	273
89	303	2.0	16.1	10400	**A412_16.1 S3 ME3LB4**	**A412_16.1 S3 MX3LB4**	280	**A412_16.1 P100 BE100LB4**	**A412_16.1 P100 BX100LB4**	281
93	291	2.1	15.5	7700	**A352_15.5 S3 ME3LB4**	**A352_15.5 S3 MX3LB4**	276	**A352_15.5 P100 BE100LB4**	**A352_15.5 P100 BX100LB4**	277
102	265	0.9	14.1	2650	**A202_14.1 S3 ME3LB4**	**A202_14.1 S3 MX3LB4**	268	**A202_14.1 P100 BE100LB4**	**A202_14.1 P100 BX100LB4**	269
105	259	2.3	13.8	9990	**A412_13.8 S3 ME3LB4**	**A412_13.8 S3 MX3LB4**	280	**A412_13.8 P100 BE100LB4**	**A412_13.8 P100 BX100LB4**	281
106	255	1.5	13.6	4500	**A302_13.6 S3 ME3LB4**	**A302_13.6 S3 MX3LB4**	272	**A302_13.6 P100 BE100LB4**	**A302_13.6 P100 BX100LB4**	273
110	246	2.4	13.1	7450	**A352_13.1 S3 ME3LB4**	**A352_13.1 S3 MX3LB4**	276	**A352_13.1 P100 BE100LB4**	**A352_13.1 P100 BX100LB4**	277
120	225	0.9	12.0	2670	**A202_12.0 S3 ME3LB4**	**A202_12.0 S3 MX3LB4**	268	**A202_12.0 P100 BE100LB4**	**A202_12.0 P100 BX100LB4**	269
122	221	1.4	11.8	4400	**A302_11.8 S3 ME3LB4**	**A302_11.8 S3 MX3LB4**	272	**A302_11.8 P100 BE100LB4**	**A302_11.8 P100 BX100LB4**	273
122	221	1.8	11.8	7410	**A352_11.8 S3 ME3LB4**	**A352_11.8 S3 MX3LB4**	276	**A352_11.8 P100 BE100LB4**	**A352_11.8 P100 BX100LB4**	277
123	221	2.5	11.7	9580	**A412_11.7 S3 ME3LB4**	**A412_11.7 S3 MX3LB4**	280	**A412_11.7 P100 BE100LB4**	**A412_11.7 P100 BX100LB4**	281
125	216	1.5	23.1	2690	**A202_23.1 S3 ME3LB2**		268	**A202_23.1 P100 BE100L2**		269
135	200	2.0	10.6	7230	**A352_10.6 S3 ME3LB4**	**A352_10.6 S3 MX3LB4**	276	**A352_10.6 P100 BE100LB4**	**A352_10.6 P100 BX100LB4**	277
138	197	1.7	10.5	4350	**A302_10.5 S3 ME3LB4**	**A302_10.5 S3 MX3LB4**	272	**A302_10.5 P100 BE100LB4**	**A302_10.5 P100 BX100LB4**	273
139	194	1.2	10.3	2690	**A202_10.3 S3 ME3LB4**	**A202_10.3 S3 MX3LB4**	268	**A202_10.3 P100 BE100LB4**	**A202_10.3 P100 BX100LB4**	269
142	190	2.8	10.1	9230	**A412_10.1 S3 ME3LB4**	**A412_10.1 S3 MX3LB4**	280	**A412_10.1 P100 BE100LB4**	**A412_10.1 P100 BX100LB4**	281
154	176	1.2	9.4	2670	**A202_9.4 S3 ME3LB4**	**A202_9.4 S3 MX3LB4**	268	**A202_9.4 P100 BE100LB4**	**A202_9.4 P100 BX100LB4**	269
155	175	1.7	9.3	4240	**A302_9.3 S3 ME3LB4**	**A302_9.3 S3 MX3LB4**	272	**A302_9.3 P100 BE100LB4**	**A302_9.3 P100 BX100LB4**	273
155	175	2.3	9.3	7000	**A352_9.3 S3 ME3LB4**	**A352_9.3 S3 MX3LB4**	276	**A352_9.3 P100 BE100LB4**	**A352_9.3 P100 BX100LB4**	277
157	173	3.2	9.2	8980	**A412_9.2 S3 ME3LB4**	**A412_9.2 S3 MX3LB4**	280	**A412_9.2 P100 BE100LB4**	**A412_9.2 P100 BX100LB4**	281
170	159	1.9	8.5	4170	**A302_8.5 S3 ME3LB4**	**A302_8.5 S3 MX3LB4**	272	**A302_8.5 P100 BE100LB4**	**A302_8.5 P100 BX100LB4**	273
170	159	2.4	8.5	6840	**A352_8.5 S3 ME3LB4**	**A352_8.5 S3 MX3LB4**	276	**A352_8.5 P100 BE100LB4**	**A352_8.5 P100 BX100LB4**	277
172	157	1.3	8.4	2650	**A202_8.4 S3 ME3LB4**	**A202_8.4 S3 MX3LB4**	268	**A202_8.4 P100 BE100LB4**	**A202_8.4 P100 BX100LB4**	269
173	157	3.5	8.3	8740	**A412_8.3 S3 ME3LB4**	**A412_8.3 S3 MX3LB4**	280	**A412_8.3 P100 BE100LB4**	**A412_8.3 P100 BX100LB4**	281
198	137	1.5	7.3	2620	**A202_7.3 S3 ME3LB4**	**A202_7.3 S3 MX3LB4**	268	**A202_7.3 P100 BE100LB4**	**A202_7.3 P100 BX100LB4**	269
200	136	1.0	7.2	2220	**A102_7.2 S3 ME3LB4**	**A102_7.2 S3 MX3LB4**	264	**A102_7.2 P100 BE100LB4**	**A102_7.2 P100 BX100LB4**	265
205	132	2.3	7.0	4030	**A302_7.0 S3 ME3LB4**	**A302_7.0 S3 MX3LB4**	272	**A302_7.0 P100 BE100LB4**	**A302_7.0 P100 BX100LB4**	273
205	132	2.8	7.0	6520	**A352_7.0 S3 ME3LB4**	**A352_7.0 S3 MX3LB4**	276	**A352_7.0 P100 BE100LB4**	**A352_7.0 P100 BX100LB4**	277
220	123	1.7	6.5	2590	**A202_6.5 S3 ME3LB4**	**A202_6.5 S3 MX3LB4**	268	**A202_6.5 P100 BE100LB4**	**A202_6.5 P100 BX100LB4**	269
225	121	2.5	6.4	3950	**A302_6.4 S3 ME3LB4**	**A302_6.4 S3 MX3LB4**	272	**A302_6.4 P100 BE100LB4**	**A302_6.4 P100 BX100LB4**	273
225	121	2.9	6.4	6360	**A352_6.4 S3 ME3LB4**	**A352_6.4 S3 MX3LB4**	276	**A352_6.4 P100 BE100LB4**	**A352_6.4 P100 BX100LB4**	277
227	119	1.2	6.3	2640	**A102_6.3 S3 ME3LB4**	**A102_6.3 S3 MX3LB4**	264	**A102_6.3 P100 BE100LB4**	**A102_6.3 P100 BX100LB4**	265
245	110	2.7	11.8	3870	**A302_11.8 S3 ME3LB2**		272	**A302_11.8 P100 BE100L2**		273
263	103	1.4	5.5	2200	**A102_5.5 S3 ME3LB4**	**A102_5.5 S3 MX3LB4**	264	**A102_5.5 P100 BE100LB4**	**A102_5.5 P100 BX100LB4**	265
266	102	2.9	5.4	3810	**A302_5.4 S3 ME3LB4**	**A302_5.4 S3 MX3LB4**	272	**A302_5.4 P100 BE100LB4**	**A302_5.4 P100 BX100LB4**	273
266	102	3.3	5.4	6070	**A352_5.4 S3 ME3LB4**	**A352_5.4 S3 MX3LB4**	276	**A352_5.4 P100 BE100LB4**	**A352_5.4 P100 BX100LB4**	277
269	101	2.1	5.4	2520	**A202_5.4 S3 ME3LB4**	**A202_5.4 S3 MX3LB4**	268	**A202_5.4 P100 BE100LB4**	**A202_5.4 P100 BX100LB4**	269
279	97	1.9	10.3	2500	**A202_10.3 S3 ME3LB2**		268	**A202_10.3 P100 BE100L2**		269
309	87	3.4	9.3	3670	**A302_9.3 S3 ME3LB2**		272	**A302_9.3 P100 BE100L2**		273
344	78	2.7	8.4	2410	**A202_8.4 S3 ME3LB2**		268	**A202_8.4 P100 BE100L2**		269
399	67	2.1	7.2	2090	**A102_7.2 S3 ME3LB2**		264	**A102_7.2 P100 BE100L2**		265
455	59	2.3	6.3	2430	**A102_6.3 S3 ME3LB2**		264	**A102_6.3 P100 BE100L2**		265
527	51	2.6	5.5	1990	**A102_5.5 S3 ME3LB2**		264	**A102_5.5 P100 BE100L2**		265

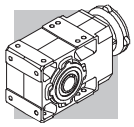

4 kW

n_2 min-1	M_2 Nm	S	i	R_{n2} N	IE2	IE3		IEC IE2	IEC IE3	
2.4	14456	1.0	601.6	75000	**A904_601.6 S4 ME4SA4**	**A904_601.6 S4 MX4SA4**	302	**A904_601.6 P112 BE112M4**	**A904_601.6 P112 BX112M4**	303
2.6	13344	1.0	555.3	75000	**A904_555.3 S4 ME4SA4**	**A904_555.3 S4 MX4SA4**	302	**A904_555.3 P112 BE112M4**	**A904_555.3 P112 BX112M4**	303
3.0	11693	1.2	486.6	75000	**A904_486.6 S4 ME4SA4**	**A904_486.6 S4 MX4SA4**	302	**A904_486.6 P112 BE112M4**	**A904_486.6 P112 BX112M4**	303
3.2	10793	1.3	449.2	75000	**A904_449.2 S4 ME4SA4**	**A904_449.2 S4 MX4SA4**	302	**A904_449.2 P112 BE112M4**	**A904_449.2 P112 BX112M4**	303
3.7	9262	1.5	385.4	75000	**A904_385.4 S4 ME4SA4**	**A904_385.4 S4 MX4SA4**	302	**A904_385.4 P112 BE112M4**	**A904_385.4 P112 BX112M4**	303
3.8	9215	0.9	383.5	65000	**A804_383.5 S4 ME4SA4**	**A804_383.5 S4 MX4SA4**	299	**A804_383.5 P112 BE112M4**	**A804_383.5 P112 BX112M4**	300
4.0	8550	1.6	355.8	75000	**A904_355.8 S4 ME4SA4**	**A904_355.8 S4 MX4SA4**	302	**A904_355.8 P112 BE112M4**	**A904_355.8 P112 BX112M4**	303
4.1	8506	0.9	354.0	65000	**A804_354.0 S4 ME4SA4**	**A804_354.0 S4 MX4SA4**	299	**A804_354.0 P112 BE112M4**	**A804_354.0 P112 BX112M4**	300
4.7	7326	1.9	304.9	75000	**A904_304.9 S4 ME4SA4**	**A904_304.9 S4 MX4SA4**	302	**A904_304.9 P112 BE112M4**	**A904_304.9 P112 BX112M4**	303
4.8	7218	1.1	300.4	65000	**A804_300.4 S4 ME4SA4**	**A804_300.4 S4 MX4SA4**	299	**A804_300.4 P112 BE112M4**	**A804_300.4 P112 BX112M4**	300
5.1	6763	2.1	281.4	75000	**A904_281.4 S4 ME4SA4**	**A904_281.4 S4 MX4SA4**	302	**A904_281.4 P112 BE112M4**	**A904_281.4 P112 BX112M4**	303
5.2	6663	1.2	277.3	65000	**A804_277.3 S4 ME4SA4**	**A804_277.3 S4 MX4SA4**	299	**A804_277.3 P112 BE112M4**	**A804_277.3 P112 BX112M4**	300
6.0	5734	0.9	238.6	50000	**A704_238.6 S4 ME4SA4**	**A704_238.6 S4 MX4SA4**	296	**A704_238.6 P112 BE112M4**	**A704_238.6 P112 BX112M4**	297
6.2	5590	1.4	232.6	65000	**A804_232.6 S4 ME4SA4**	**A804_232.6 S4 MX4SA4**	299	**A804_232.6 P112 BE112M4**	**A804_232.6 P112 BX112M4**	300
6.4	5441	2.6	226.4	75000	**A904_226.4 S4 ME4SA4**	**A904_226.4 S4 MX4SA4**	302	**A904_226.4 P112 BE112M4**	**A904_226.4 P112 BX112M4**	303
6.5	5293	0.9	220.3	50000	**A704_220.3 S4 ME4SA4**	**A704_220.3 S4 MX4SA4**	296	**A704_220.3 P112 BE112M4**	**A704_220.3 P112 BX112M4**	297
6.7	5160	1.6	214.7	65000	**A804_214.7 S4 ME4SA4**	**A804_214.7 S4 MX4SA4**	299	**A804_214.7 P112 BE112M4**	**A804_214.7 P112 BX112M4**	300
6.9	5023	2.8	209.0	75000	**A904_209.0 S4 ME4SA4**	**A904_209.0 S4 MX4SA4**	302	**A904_209.0 P112 BE112M4**	**A904_209.0 P112 BX112M4**	303
7.8	4419	1.1	183.9	50000	**A704_183.9 S4 ME4SA4**	**A704_183.9 S4 MX4SA4**	296	**A704_183.9 P112 BE112M4**	**A704_183.9 P112 BX112M4**	297
8.0	4325	3.2	180.0	75000	**A904_180.0 S4 ME4SA4**	**A904_180.0 S4 MX4SA4**	302	**A904_180.0 P112 BE112M4**	**A904_180.0 P112 BX112M4**	303
8.4	4116	1.9	171.3	65000	**A804_171.3 S4 ME4SA4**	**A804_171.3 S4 MX4SA4**	299	**A804_171.3 P112 BE112M4**	**A804_171.3 P112 BX112M4**	300
8.5	4079	1.2	169.8	50000	**A704_169.8 S4 ME4SA4**	**A704_169.8 S4 MX4SA4**	296	**A704_169.8 P112 BE112M4**	**A704_169.8 P112 BX112M4**	297
8.7	3992	3.5	166.1	75000	**A904_166.1 S4 ME4SA4**	**A904_166.1 S4 MX4SA4**	302	**A904_166.1 P112 BE112M4**	**A904_166.1 P112 BX112M4**	303
9.2	3853	2.1	156.8	65000	**A803_156.8 S4 ME4SA4**	**A803_156.8 S4 MX4SA4**	299	**A803_156.8 P112 BE112M4**	**A803_156.8 P112 BX112M4**	300
9.4	3776	1.1	153.7	50000	**A703_153.7 S4 ME4SA4**	**A703_153.7 S4 MX4SA4**	296	**A703_153.7 P112 BE112M4**	**A703_153.7 P112 BX112M4**	297
9.9	3556	2.2	144.7	65000	**A803_144.7 S4 ME4SA4**	**A803_144.7 S4 MX4SA4**	299	**A803_144.7 P112 BE112M4**	**A803_144.7 P112 BX112M4**	300
10.2	3486	1.4	141.9	50000	**A703_141.9 S4 ME4SA4**	**A703_141.9 S4 MX4SA4**	296	**A703_141.9 P112 BE112M4**	**A703_141.9 P112 BX112M4**	297
11.0	3210	1.6	130.7	50000	**A703_130.7 S4 ME4SA4**	**A703_130.7 S4 MX4SA4**	296	**A703_130.7 P112 BE112M4**	**A703_130.7 P112 BX112M4**	297
11.5	3086	2.6	125.6	65000	**A803_125.6 S4 ME4SA4**	**A803_125.6 S4 MX4SA4**	299	**A803_125.6 P112 BE112M4**	**A803_125.6 P112 BX112M4**	300
11.7	3023	0.9	123.0	30000	**A603_123.0 S4 ME4SA4**	**A603_123.0 S4 MX4SA4**	292	**A603_123.0 P112 BE112M4**	**A603_123.0 P112 BX112M4**	293
11.9	2964	1.7	120.6	50000	**A703_120.6 S4 ME4SA4**	**A703_120.6 S4 MX4SA4**	296	**A703_120.6 P112 BE112M4**	**A703_120.6 P112 BX112M4**	297
12.4	2849	2.8	116.0	65000	**A803_116.0 S4 ME4SA4**	**A803_116.0 S4 MX4SA4**	299	**A803_116.0 P112 BE112M4**	**A803_116.0 P112 BX112M4**	300
13.4	2649	1.1	107.8	30000	**A603_107.8 S4 ME4SA4**	**A603_107.8 S4 MX4SA4**	292	**A603_107.8 P112 BE112M4**	**A603_107.8 P112 BX112M4**	293
13.8	2561	2.0	104.2	50000	**A703_104.2 S4 ME4SA4**	**A703_104.2 S4 MX4SA4**	296	**A703_104.2 P112 BE112M4**	**A703_104.2 P112 BX112M4**	297
13.8	2556	3.1	104.0	65000	**A803_104.0 S4 ME4SA4**	**A803_104.0 S4 MX4SA4**	299	**A803_104.0 P112 BE112M4**	**A803_104.0 P112 BX112M4**	300
14.5	2445	1.1	99.5	30000	**A603_99.5 S4 ME4SA4**	**A603_99.5 S4 MX4SA4**	292	**A603_99.5 P112 BE112M4**	**A603_99.5 P112 BX112M4**	293
15.0	2364	2.1	96.2	50000	**A703_96.2 S4 ME4SA4**	**A703_96.2 S4 MX4SA4**	296	**A703_96.2 P112 BE112M4**	**A703_96.2 P112 BX112M4**	297
15.0	2359	3.4	96.0	65000	**A803_96.0 S4 ME4SA4**	**A803_96.0 S4 MX4SA4**	299	**A803_96.0 P112 BE112M4**	**A803_96.0 P112 BX112M4**	300
16.7	2122	1.3	86.4	30000	**A603_86.4 S4 ME4SA4**	**A603_86.4 S4 MX4SA4**	292	**A603_86.4 P112 BE112M4**	**A603_86.4 P112 BX112M4**	293
16.8	2112	2.4	85.9	50000	**A703_85.9 S4 ME4SA4**	**A703_85.9 S4 MX4SA4**	296	**A703_85.9 P112 BE112M4**	**A703_85.9 P112 BX112M4**	297
18.1	1959	1.4	79.7	30000	**A603_79.7 S4 ME4SA4**	**A603_79.7 S4 MX4SA4**	292	**A603_79.7 P112 BE112M4**	**A603_79.7 P112 BX112M4**	293
18.1	1954	1.0	79.5	30000	**A553_79.5 S4 ME4SA4**	**A553_79.5 S4 MX4SA4**	288	**A553_79.5 P112 BE112M4**	**A553_79.5 P112 BX112M4**	289
18.2	1949	2.6	79.3	50000	**A703_79.3 S4 ME4SA4**	**A703_79.3 S4 MX4SA4**	296	**A703_79.3 P112 BE112M4**	**A703_79.3 P112 BX112M4**	297
19.9	1782	2.8	72.5	50000	**A703_72.5 S4 ME4SA4**	**A703_72.5 S4 MX4SA4**	296	**A703_72.5 P112 BE112M4**	**A703_72.5 P112 BX112M4**	297
20.5	1730	1.6	70.4	30000	**A603_70.4 S4 ME4SA4**	**A603_70.4 S4 MX4SA4**	292	**A603_70.4 P112 BE112M4**	**A603_70.4 P112 BX112M4**	293
21.5	1645	3.0	66.9	50000	**A703_66.9 S4 ME4SA4**	**A703_66.9 S4 MX4SA4**	296	**A703_66.9 P112 BE112M4**	**A703_66.9 P112 BX112M4**	297
22.2	1597	1.8	65.0	30000	**A603_65.0 S4 ME4SA4**	**A603_65.0 S4 MX4SA4**	292	**A603_65.0 P112 BE112M4**	**A603_65.0 P112 BX112M4**	293
22.4	1580	1.3	64.3	30000	**A553_64.3 S4 ME4SA4**	**A553_64.3 S4 MX4SA4**	288	**A553_64.3 P112 BE112M4**	**A553_64.3 P112 BX112M4**	289
22.5	1570	1.0	63.9	14700	**A503_63.9 S4 ME4SA4**	**A503_63.9 S4 MX4SA4**	284	**A503_63.9 P112 BE112M4**	**A503_63.9 P112 BX112M4**	285
25.3	1396	1.1	56.8	14800	**A503_56.8 S4 ME4SA4**	**A503_56.8 S4 MX4SA4**	284	**A503_56.8 P112 BE112M4**	**A503_56.8 P112 BX112M4**	285
25.9	1366	2.0	55.6	30000	**A603_55.6 S4 ME4SA4**	**A603_55.6 S4 MX4SA4**	292	**A603_55.6 P112 BE112M4**	**A603_55.6 P112 BX112M4**	293
27.9	1270	1.2	51.7	14900	**A503_51.7 S4 ME4SA4**	**A503_51.7 S4 MX4SA4**	284	**A503_51.7 P112 BE112M4**	**A503_51.7 P112 BX112M4**	285
28.1	1261	2.2	51.3	30000	**A603_51.3 S4 ME4SA4**	**A603_51.3 S4 MX4SA4**	292	**A603_51.3 P112 BE112M4**	**A603_51.3 P112 BX112M4**	293
28.3	1252	1.6	51.0	30000	**A553_51.0 S4 ME4SA4**	**A553_51.0 S4 MX4SA4**	288	**A553_51.0 P112 BE112M4**	**A553_51.0 P112 BX112M4**	289
32	1110	2.5	45.2	30000	**A603_45.2 S4 ME4SA4**	**A603_45.2 S4 MX4SA4**	292	**A603_45.2 P112 BE112M4**	**A603_45.2 P112 BX112M4**	293
32	1106	1.4	45.0	14900	**A503_45.0 S4 ME4SA4**	**A503_45.0 S4 MX4SA4**	284	**A503_45.0 P112 BE112M4**	**A503_45.0 P112 BX112M4**	285
35	1025	2.7	41.7	30000	**A603_41.7 S4 ME4SA4**	**A603_41.7 S4 MX4SA4**	292	**A603_41.7 P112 BE112M4**	**A603_41.7 P112 BX112M4**	293

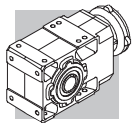

4 kW

n_2 min-1	M_2 Nm	S	i	R_{n2} N	IE2	IE3		IEC IE2	IEC IE3	
35	1006	1.5	40.9	14800	**A503_40.9 S4 ME4SA4**	**A503_40.9 S4 MX4SA4**	284	**A503_40.9 P112 BE112M4**	**A503_40.9 P112 BX112M4**	285
36	990	2.0	40.3	30000	**A553_40.3 S4 ME4SA4**	**A553_40.3 S4 MX4SA4**	288	**A553_40.3 P112 BE112M4**	**A553_40.3 P112 BX112M4**	289
40	875	1.7	35.6	14700	**A503_35.6 S4 ME4SA4**	**A503_35.6 S4 MX4SA4**	284	**A503_35.6 P112 BE112M4**	**A503_35.6 P112 BX112M4**	285
42	843	3.3	34.3	30000	**A603_34.3 S4 ME4SA4**	**A603_34.3 S4 MX4SA4**	292	**A603_34.3 P112 BE112M4**	**A603_34.3 P112 BX112M4**	293
44	796	1.9	32.4	14500	**A503_32.4 S4 ME4SA4**	**A503_32.4 S4 MX4SA4**	284	**A503_32.4 P112 BE112M4**	**A503_32.4 P112 BX112M4**	285
48	735	2.7	29.9	30000	**A553_29.9 S4 ME4SA4**	**A553_29.9 S4 MX4SA4**	288	**A553_29.9 P112 BE112M4**	**A553_29.9 P112 BX112M4**	289
51	719	1.0	28.3	10900	**A412_28.3 S4 ME4SA4**	**A412_28.3 S4 MX4SA4**	280	**A412_28.3 P112 BE112M4**	**A412_28.3 P112 BX112M4**	281
54	650	2.3	26.4	14100	**A503_26.4 S4 ME4SA4**	**A503_26.4 S4 MX4SA4**	284	**A503_26.4 P112 BE112M4**	**A503_26.4 P112 BX112M4**	285
56	652	0.9	25.7	7420				**A352_25.7 P112 BE112M4**	**A352_25.7 P112 BX112M4**	277
60	591	2.5	24.0	13900	**A503_24.0 S4 ME4SA4**	**A503_24.0 S4 MX4SA4**	284	**A503_24.0 P112 BE112M4**	**A503_24.0 P112 BX112M4**	285
61	585	3.3	23.8	30000	**A553_23.8 S4 ME4SA4**	**A553_23.8 S4 MX4SA4**	288	**A553_23.8 P112 BE112M4**	**A553_23.8 P112 BX112M4**	289
64	576	1.2	22.7	10500	**A412_22.7 S4 ME4SA4**	**A412_22.7 S4 MX4SA4**	280	**A412_22.7 P112 BE112M4**	**A412_22.7 P112 BX112M4**	281
64	571	1.1	22.5	7400				**A352_22.5 P112 BE112M4**	**A352_22.5 P112 BX112M4**	277
69	531	2.3	20.9	15100	**A502_20.9 S4 ME4SA4**	**A502_20.9 S4 MX4SA4**	284	**A502_20.9 P112 BE112M4**	**A502_20.9 P112 BX112M4**	285
70	518	1.2	20.4	7360				**A352_20.4 P112 BE112M4**	**A352_20.4 P112 BX112M4**	277
80	456	0.9	18.0	3930				**A302_18.0 P112 BE112M4**	**A302_18.0 P112 BX112M4**	273
81	451	1.4	17.8	10100	**A412_17.8 S4 ME4SA4**	**A412_17.8 S4 MX4SA4**	280	**A412_17.8 P112 BE112M4**	**A412_17.8 P112 BX112M4**	281
85	430	1.4	17.0	7240				**A352_17.0 P112 BE112M4**	**A352_17.0 P112 BX112M4**	277
87	421	2.9	16.6	14200	**A502_16.6 S4 ME4SA4**	**A502_16.6 S4 MX4SA4**	284	**A502_16.6 P112 BE112M4**	**A502_16.6 P112 BX112M4**	285
88	415	0.9	16.3	3970				**A302_16.3 P112 BE112M4**	**A302_16.3 P112 BX112M4**	273
89	408	1.5	16.1	9940	**A412_16.1 S4 ME4SA4**	**A412_16.1 S4 MX4SA4**	280	**A412_16.1 P112 BE112M4**	**A412_16.1 P112 BX112M4**	281
93	393	1.5	15.5	7160				**A352_15.5 P112 BE112M4**	**A352_15.5 P112 BX112M4**	277
105	349	1.7	13.8	9610	**A412_13.8 S4 ME4SA4**	**A412_13.8 S4 MX4SA4**	280	**A412_13.8 P112 BE112M4**	**A412_13.8 P112 BX112M4**	281
106	344	1.1	13.6	4000				**A302_13.6 P112 BE112M4**	**A302_13.6 P112 BX112M4**	273
110	333	3.3	13.1	13300	**A502_13.1 S4 ME4SA4**	**A502_13.1 S4 MX4SA4**	284	**A502_13.1 P112 BE112M4**	**A502_13.1 P112 BX112M4**	285
110	332	1.8	13.1	7000				**A352_13.1 P112 BE112M4**	**A352_13.1 P112 BX112M4**	277
122	299	1.0	11.8	3960				**A302_11.8 P112 BE112M4**	**A302_11.8 P112 BX112M4**	273
122	299	1.3	11.8	7050	**A352_11.8 S4 ME4SA4**	**A352_11.8 S4 MX4SA4**	276	**A352_11.8 P112 BE112M4**	**A352_11.8 P112 BX112M4**	277
123	298	1.8	11.7	9260	**A412_11.7 S4 ME4SA4**	**A412_11.7 S4 MX4SA4**	280	**A412_11.7 P112 BE112M4**	**A412_11.7 P112 BX112M4**	281
127	282	1.2	22.8	3980				**A302_22.8 P112 BE112M2**		273
135	270	1.5	10.6	6910	**A352_10.6 S4 ME4SA4**	**A352_10.6 S4 MX4SA4**	276	**A352_10.6 P112 BE112M4**	**A352_10.6 P112 BX112M4**	277
138	265	1.3	10.5	3970				**A302_10.5 P112 BE112M4**	**A302_10.5 P112 BX112M4**	273
142	257	2.1	10.1	8960	**A412_10.1 S4 ME4SA4**	**A412_10.1 S4 MX4SA4**	280	**A412_10.1 P112 BE112M4**	**A412_10.1 P112 BX112M4**	281
155	236	1.3	9.3	3900				**A302_9.3 P112 BE112M4**	**A302_9.3 P112 BX112M4**	273
155	236	1.7	9.3	6730	**A352_9.3 S4 ME4SA4**	**A352_9.3 S4 MX4SA4**	276	**A352_9.3 P112 BE112M4**	**A352_9.3 P112 BX112M4**	277
157	233	2.4	9.2	8740	**A412_9.2 S4 ME4SA4**	**A412_9.2 S4 MX4SA4**	280	**A412_9.2 P112 BE112M4**	**A412_9.2 P112 BX112M4**	281
170	215	1.4	8.5	3860				**A302_8.5 P112 BE112M4**	**A302_8.5 P112 BX112M4**	273
170	215	1.8	8.5	6590	**A352_8.5 S4 ME4SA4**	**A352_8.5 S4 MX4SA4**	276	**A352_8.5 P112 BE112M4**	**A352_8.5 P112 BX112M4**	277
172	212	1.0	8.4	2300				**A202_8.4 P112 BE112M4**	**A202_8.4 P112 BX112M4**	269
173	211	2.6	8.3	8520	**A412_8.3 S4 ME4SA4**	**A412_8.3 S4 MX4SA4**	280	**A412_8.3 P112 BE112M4**	**A412_8.3 P112 BX112M4**	281
198	185	1.1	7.3	2310				**A202_7.3 P112 BE112M4**	**A202_7.3 P112 BX112M4**	269
202	181	3.0	7.1	8180	**A412_7.1 S4 ME4SA4**	**A412_7.1 S4 MX4SA4**	280	**A412_7.1 P112 BE112M4**	**A412_7.1 P112 BX112M4**	281
205	178	1.7	7.0	3770				**A302_7.0 P112 BE112M4**	**A302_7.0 P112 BX112M4**	273
205	178	2.1	7.0	6310	**A352_7.0 S4 ME4SA4**	**A352_7.0 S4 MX4SA4**	276	**A352_7.0 P112 BE112M4**	**A352_7.0 P112 BX112M4**	277
220	166	1.3	6.5	2310				**A202_6.5 P112 BE112M4**	**A202_6.5 P112 BX112M4**	269
225	163	1.8	6.4	3720				**A302_6.4 P112 BE112M4**	**A302_6.4 P112 BX112M4**	273
225	163	2.2	6.4	6180	**A352_6.4 S4 ME4SA4**	**A352_6.4 S4 MX4SA4**	276	**A352_6.4 P112 BE112M4**	**A352_6.4 P112 BX112M4**	277
263	139	1.0	5.5	1910	**A102_5.5 S4 ME4SA4**	**A102_5.5 S4 MX4SA4**	264	**A102_5.5 P112 BE112M4**	**A102_5.5 P112 BX112M4**	265
266	137	2.2	5.4	3610				**A302_5.4 P112 BE112M4**	**A302_5.4 P112 BX112M4**	273
266	137	2.5	5.4	5920	**A352_5.4 S4 ME4SA4**	**A352_5.4 S4 MX4SA4**	276	**A352_5.4 P112 BE112M4**	**A352_5.4 P112 BX112M4**	277
269	136	1.5	5.4	2300				**A202_5.4 P112 BE112M4**	**A202_5.4 P112 BX112M4**	269
273	132	3.0	10.6	5850	**A352_10.6 S4 ME4SA2**		276	**A352_10.6 P112 BE112M2**		277
311	115	3.5	9.3	5650	**A352_9.3 S4 ME4SA2**		276	**A352_9.3 P112 BE112M2**		277
346	104	2.1	8.4	2230				**A202_8.4 P112 BE112M2**		269
413	87	3.4	7.0	3280				**A302_7.0 P112 BE112M2**		273
458	78	1.8	6.3	2240				**A102_6.3 P112 BE112M2**		265
542	66	2.9	5.4	2080				**A202_5.4 P112 BE112M2**		269

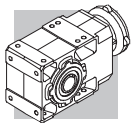

5.5 kW

n_2 min-1	M_2 Nm	S	i	R_{n2} N	IE2	IE3		IEC IE2	IEC IE3	
3.0	15590	0.9	486.6	75000	**A904_486.6 S4 ME4SB4**	**A904_486.6 S4 MX4SB4**	302	**A904_486.6 P132 BE132S4**	**A904_486.6 P132 BX132SB4**	303
3.3	14391	1.0	449.2	75000	**A904_449.2 S4 ME4SB4**	**A904_449.2 S4 MX4SB4**	302	**A904_449.2 P132 BE132S4**	**A904_449.2 P132 BX132SB4**	303
3.8	12350	1.1	385.4	75000	**A904_385.4 S4 ME4SB4**	**A904_385.4 S4 MX4SB4**	302	**A904_385.4 P132 BE132S4**	**A904_385.4 P132 BX132SB4**	303
4.1	11400	1.2	355.8	75000	**A904_355.8 S4 ME4SB4**	**A904_355.8 S4 MX4SB4**	302	**A904_355.8 P132 BE132S4**	**A904_355.8 P132 BX132SB4**	303
4.8	9769	1.4	304.9	75000	**A904_304.9 S4 ME4SB4**	**A904_304.9 S4 MX4SB4**	302	**A904_304.9 P132 BE132S4**	**A904_304.9 P132 BX132SB4**	303
5.2	9017	1.6	281.4	75000	**A904_281.4 S4 ME4SB4**	**A904_281.4 S4 MX4SB4**	302	**A904_281.4 P132 BE132S4**	**A904_281.4 P132 BX132SB4**	303
5.3	8884	0.9	277.3	65000	**A804_277.3 S4 ME4SB4**	**A804_277.3 S4 MX4SB4**	299	**A804_277.3 P132 BE132S4**	**A804_277.3 P132 BX132SB4**	300
6.3	7453	1.1	232.6	65000	**A804_232.6 S4 ME4SB4**	**A804_232.6 S4 MX4SB4**	299	**A804_232.6 P132 BE132S4**	**A804_232.6 P132 BX132SB4**	300
6.4	7255	1.9	226.4	75000	**A904_226.4 S4 ME4SB4**	**A904_226.4 S4 MX4SB4**	302	**A904_226.4 P132 BE132S4**	**A904_226.4 P132 BX132SB4**	303
6.8	6880	1.2	214.7	65000	**A804_214.7 S4 ME4SB4**	**A804_214.7 S4 MX4SB4**	299	**A804_214.7 P132 BE132S4**	**A804_214.7 P132 BX132SB4**	300
7.0	6697	2.1	209.0	75000	**A904_209.0 S4 ME4SB4**	**A904_209.0 S4 MX4SB4**	302	**A904_209.0 P132 BE132S4**	**A904_209.0 P132 BX132SB4**	303
8.1	5766	2.4	180.0	75000	**A904_180.0 S4 ME4SB4**	**A904_180.0 S4 MX4SB4**	302	**A904_180.0 P132 BE132S4**	**A904_180.0 P132 BX132SB4**	303
8.5	5488	1.5	171.3	65000	**A804_171.3 S4 ME4SB4**	**A804_171.3 S4 MX4SB4**	299	**A804_171.3 P132 BE132S4**	**A804_171.3 P132 BX132SB4**	300
8.6	5439	0.9	169.8	50000	**A704_169.8 S4 ME4SB4**	**A704_169.8 S4 MX4SB4**	296	**A704_169.8 P132 BE132S4**	**A704_169.8 P132 BX132SB4**	297
8.8	5323	2.6	166.1	75000	**A904_166.1 S4 ME4SB4**	**A904_166.1 S4 MX4SB4**	302	**A904_166.1 P132 BE132S4**	**A904_166.1 P132 BX132SB4**	303
9.3	5137	1.6	156.8	65000	**A803_156.8 S4 ME4SB4**	**A803_156.8 S4 MX4SB4**	299	**A803_156.8 P132 BE132S4**	**A803_156.8 P132 BX132SB4**	300
9.7	4947	2.8	151.0	75000	**A903_151.0 S4 ME4SB4**	**A903_151.0 S4 MX4SB4**	302	**A903_151.0 P132 BE132S4**	**A903_151.0 P132 BX132SB4**	303
10.1	4742	1.7	144.7	65000	**A803_144.7 S4 ME4SB4**	**A803_144.7 S4 MX4SB4**	299	**A803_144.7 P132 BE132S4**	**A803_144.7 P132 BX132SB4**	300
10.3	4647	1.1	141.9	50000	**A703_141.9 S4 ME4SB4**	**A703_141.9 S4 MX4SB4**	296	**A703_141.9 P132 BE132S4**	**A703_141.9 P132 BX132SB4**	297
10.5	4567	2.8	139.4	75000	**A903_139.4 S4 ME4SB4**	**A903_139.4 S4 MX4SB4**	302	**A903_139.4 P132 BE132S4**	**A903_139.4 P132 BX132SB4**	303
11.2	4281	1.2	130.7	50000	**A703_130.7 S4 ME4SB4**	**A703_130.7 S4 MX4SB4**	296	**A703_130.7 P132 BE132S4**	**A703_130.7 P132 BX132SB4**	297
11.5	4149	3.2	126.6	75000	**A903_126.6 S4 ME4SB4**	**A903_126.6 S4 MX4SB4**	302	**A903_126.6 P132 BE132S4**	**A903_126.6 P132 BX132SB4**	303
11.6	4115	1.9	125.6	65000	**A803_125.6 S4 ME4SB4**	**A803_125.6 S4 MX4SB4**	299	**A803_125.6 P132 BE132S4**	**A803_125.6 P132 BX132SB4**	300
12.1	3951	1.3	120.6	50000	**A703_120.6 S4 ME4SB4**	**A703_120.6 S4 MX4SB4**	296	**A703_120.6 P132 BE132S4**	**A703_120.6 P132 BX132SB4**	297
12.6	3799	2.1	116.0	65000	**A803_116.0 S4 ME4SB4**	**A803_116.0 S4 MX4SB4**	299	**A803_116.0 P132 BE132S4**	**A803_116.0 P132 BX132SB4**	300
14.0	3415	1.5	104.2	50000	**A703_104.2 S4 ME4SB4**	**A703_104.2 S4 MX4SB4**	296	**A703_104.2 P132 BE132S4**	**A703_104.2 P132 BX132SB4**	297
14.0	3408	2.3	104.0	65000	**A803_104.0 S4 ME4SB4**	**A803_104.0 S4 MX4SB4**	299	**A803_104.0 P132 BE132S4**	**A803_104.0 P132 BX132SB4**	300
15.2	3152	1.6	96.2	50000	**A703_96.2 S4 ME4SB4**	**A703_96.2 S4 MX4SB4**	296	**A703_96.2 P132 BE132S4**	**A703_96.2 P132 BX132SB4**	297
15.2	3146	2.5	96.0	65000	**A803_96.0 S4 ME4SB4**	**A803_96.0 S4 MX4SB4**	299	**A803_96.0 P132 BE132S4**	**A803_96.0 P132 BX132SB4**	300
16.4	2922	2.7	89.2	65000	**A803_89.2 S4 ME4SB4**	**A803_89.2 S4 MX4SB4**	299	**A803_89.2 P132 BE132S4**	**A803_89.2 P132 BX132SB4**	300
16.9	2829	1.0	86.4	30000	**A603_86.4 S4 ME4SB4**	**A603_86.4 S4 MX4SB4**	292	**A603_86.4 P132 BE132S4**	**A603_86.4 P132 BX132SB4**	293
17.0	2815	1.8	85.9	50000	**A703_85.9 S4 ME4SB4**	**A703_85.9 S4 MX4SB4**	296	**A703_85.9 P132 BE132S4**	**A703_85.9 P132 BX132SB4**	297
17.7	2697	3.0	82.3	65000	**A803_82.3 S4 ME4SB4**	**A803_82.3 S4 MX4SB4**	299	**A803_82.3 P132 BE132S4**	**A803_82.3 P132 BX132SB4**	300
18.3	2612	1.1	79.7	30000	**A603_79.7 S4 ME4SB4**	**A603_79.7 S4 MX4SB4**	292	**A603_79.7 P132 BE132S4**	**A603_79.7 P132 BX132SB4**	293
18.4	2599	1.9	79.3	50000	**A703_79.3 S4 ME4SB4**	**A703_79.3 S4 MX4SB4**	296	**A703_79.3 P132 BE132S4**	**A703_79.3 P132 BX132SB4**	297
20.1	2376	2.1	72.5	50000	**A703_72.5 S4 ME4SB4**	**A703_72.5 S4 MX4SB4**	296	**A703_72.5 P132 BE132S4**	**A703_72.5 P132 BX132SB4**	297
20.2	2371	3.4	72.4	65000	**A803_72.4 S4 ME4SB4**	**A803_72.4 S4 MX4SB4**	299	**A803_72.4 P132 BE132S4**	**A803_72.4 P132 BX132SB4**	300
20.7	2306	1.2	70.4	30000	**A603_70.4 S4 ME4SB4**	**A603_70.4 S4 MX4SB4**	292	**A603_70.4 P132 BE132S4**	**A603_70.4 P132 BX132SB4**	293
21.8	2193	2.3	66.9	50000	**A703_66.9 S4 ME4SB4**	**A703_66.9 S4 MX4SB4**	296	**A703_66.9 P132 BE132S4**	**A703_66.9 P132 BX132SB4**	297
22.5	2129	1.3	65.0	30000	**A603_65.0 S4 ME4SB4**	**A603_65.0 S4 MX4SB4**	292	**A603_65.0 P132 BE132S4**	**A603_65.0 P132 BX132SB4**	293
22.7	2107	0.9	64.3	30000	**A553_64.3 S4 ME4SB4**	**A553_64.3 S4 MX4SB4**	288	**A553_64.3 P132 BE132S4**	**A553_64.3 P132 BX132SB4**	289
25.3	1889	2.6	57.7	50000	**A703_57.7 S4 ME4SB4**	**A703_57.7 S4 MX4SB4**	296	**A703_57.7 P132 BE132S4**	**A703_57.7 P132 BX132SB4**	297
26.3	1822	1.5	55.6	30000	**A603_55.6 S4 ME4SB4**	**A603_55.6 S4 MX4SB4**	292	**A603_55.6 P132 BE132S4**	**A603_55.6 P132 BX132SB4**	293
27.4	1744	2.9	53.2	50000	**A703_53.2 S4 ME4SB4**	**A703_53.2 S4 MX4SB4**	296	**A703_53.2 P132 BE132S4**	**A703_53.2 P132 BX132SB4**	297
28.4	1681	1.7	51.3	30000	**A603_51.3 S4 ME4SB4**	**A603_51.3 S4 MX4SB4**	292	**A603_51.3 P132 BE132S4**	**A603_51.3 P132 BX132SB4**	293
28.7	1669	1.2	51.0	30000	**A553_51.0 S4 ME4SB4**	**A553_51.0 S4 MX4SB4**	288	**A553_51.0 P132 BE132S4**	**A553_51.0 P132 BX132SB4**	289
29.8	1605	3.1	49.0	50000	**A703_49.0 S4 ME4SB4**	**A703_49.0 S4 MX4SB4**	296	**A703_49.0 P132 BE132S4**	**A703_49.0 P132 BX132SB4**	297
32	1482	3.2	45.2	50000	**A703_45.2 S4 ME4SB4**	**A703_45.2 S4 MX4SB4**	296	**A703_45.2 P132 BE132S4**	**A703_45.2 P132 BX132SB4**	297
32	1480	1.9	45.2	30000	**A603_45.2 S4 ME4SB4**	**A603_45.2 S4 MX4SB4**	292	**A603_45.2 P132 BE132S4**	**A603_45.2 P132 BX132SB4**	293
32	1474	1.0	45.0	12400	**A503_45.0 S4 ME4SB4**	**A503_45.0 S4 MX4SB4**	284	**A503_45.0 P132 BE132S4**	**A503_45.0 P132 BX132SB4**	285
35	1367	2.0	41.7	30000	**A603_41.7 S4 ME4SB4**	**A603_41.7 S4 MX4SB4**	292	**A603_41.7 P132 BE132S4**	**A603_41.7 P132 BX132SB4**	293
36	1341	1.1	40.9	12600	**A503_40.9 S4 ME4SB4**	**A503_40.9 S4 MX4SB4**	284	**A503_40.9 P132 BE132S4**	**A503_40.9 P132 BX132SB4**	285
36	1320	1.5	40.3	30000	**A553_40.3 S4 ME4SB4**	**A553_40.3 S4 MX4SB4**	288	**A553_40.3 P132 BE132S4**	**A553_40.3 P132 BX132SB4**	289
41	1166	1.3	35.6	12700	**A503_35.6 S4 ME4SB4**	**A503_35.6 S4 MX4SB4**	284	**A503_35.6 P132 BE132S4**	**A503_35.6 P132 BX132SB4**	285
43	1124	2.5	34.3	30000	**A603_34.3 S4 ME4SB4**	**A603_34.3 S4 MX4SB4**	292	**A603_34.3 P132 BE132S4**	**A603_34.3 P132 BX132SB4**	293
45	1061	1.4	32.4	12700	**A503_32.4 S4 ME4SB4**	**A503_32.4 S4 MX4SB4**	284	**A503_32.4 P132 BE132S4**	**A503_32.4 P132 BX132SB4**	285
46	1037	2.7	31.7	30000	**A603_31.7 S4 ME4SB4**	**A603_31.7 S4 MX4SB4**	292	**A603_31.7 P132 BE132S4**	**A603_31.7 P132 BX132SB4**	293

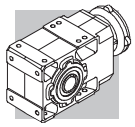

5.5 kW

n_2 min-1	M_2 Nm	S	i	R_{n2} N	IE2	IE3		IEC IE2	IEC IE3	
49	981	2.0	29.9	30000	**A553_29.9 S4 ME4SB4**	**A553_29.9 S4 MX4SB4**	288	**A553_29.9 P132 BE132S4**	**A553_29.9 P132 BX132SB4**	289
52	912	3.1	27.9	30000	**A603_27.9 S4 ME4SB4**	**A603_27.9 S4 MX4SB4**	292	**A603_27.9 P132 BE132S4**	**A603_27.9 P132 BX132SB4**	293
55	866	1.7	26.4	12600	**A503_26.4 S4 ME4SB4**	**A503_26.4 S4 MX4SB4**	284	**A503_26.4 P132 BE132S4**	**A503_26.4 P132 BX132SB4**	285
57	842	3.3	25.7	30000	**A603_25.7 S4 ME4SB4**	**A603_25.7 S4 MX4SB4**	292	**A603_25.7 P132 BE132S4**	**A603_25.7 P132 BX132SB4**	293
61	788	1.9	24.0	12500	**A503_24.0 S4 ME4SB4**	**A503_24.0 S4 MX4SB4**	284	**A503_24.0 P132 BE132S4**	**A503_24.0 P132 BX132SB4**	285
61	779	2.5	23.8	29800	**A553_23.8 S4 ME4SB4**	**A553_23.8 S4 MX4SB4**	288	**A553_23.8 P132 BE132S4**	**A553_23.8 P132 BX132SB4**	289
70	708	1.7	20.9	14400	**A502_20.9 S4 ME4SB4**	**A502_20.9 S4 MX4SB4**	284	**A502_20.9 P132 BE132S4**	**A502_20.9 P132 BX132SB4**	285
71	697	2.9	20.6	30000	**A602_20.6 S4 ME4SB4**	**A602_20.6 S4 MX4SB4**	292	**A602_20.6 P132 BE132S4**	**A602_20.6 P132 BX132SB4**	293
76	651	2.8	19.2	29300	**A552_19.2 S4 ME4SB4**	**A552_19.2 S4 MX4SB4**	288	**A552_19.2 P132 BE132S4**	**A552_19.2 P132 BX132SB4**	289
82	601	1.0	17.8	9280	**A412_17.8 S4 ME4SB4**	**A412_17.8 S4 MX4SB4**	280	**A412_17.8 P132 BE132S4**	**A412_17.8 P132 BX132SB4**	281
87	566	3.5	16.7	30000	**A602_16.7 S4 ME4SB4**	**A602_16.7 S4 MX4SB4**	292	**A602_16.7 P132 BE132S4**	**A602_16.7 P132 BX132SB4**	293
88	561	2.1	16.6	13600	**A502_16.6 S4 ME4SB4**	**A502_16.6 S4 MX4SB4**	284	**A502_16.6 P132 BE132S4**	**A502_16.6 P132 BX132SB4**	285
91	545	1.1	16.1	9160	**A412_16.1 S4 ME4SB4**	**A412_16.1 S4 MX4SB4**	280	**A412_16.1 P132 BE132S4**	**A412_16.1 P132 BX132SB4**	281
93	531	3.4	15.7	27700	**A552_15.7 S4 ME4SB4**	**A552_15.7 S4 MX4SB4**	288	**A552_15.7 P132 BE132S4**	**A552_15.7 P132 BX132SB4**	289
106	466	1.3	13.8	8940	**A412_13.8 S4 ME4SB4**	**A412_13.8 S4 MX4SB4**	280	**A412_13.8 P132 BE132S4**	**A412_13.8 P132 BX132SB4**	281
111	444	2.5	13.1	12800	**A502_13.1 S4 ME4SB4**	**A502_13.1 S4 MX4SB4**	284	**A502_13.1 P132 BE132S4**	**A502_13.1 P132 BX132SB4**	285
124	397	1.4	11.7	8670	**A412_11.7 S4 ME4SB4**	**A412_11.7 S4 MX4SB4**	280	**A412_11.7 P132 BE132S4**	**A412_11.7 P132 BX132SB4**	281
124	399	1.0	11.8	6450	**A352_11.8 S4 ME4SB4**	**A352_11.8 S4 MX4SB4**	276	**A352_11.8 P132 BE132S4**	**A352_11.8 P132 BX132SB4**	277
138	360	1.1	10.6	6360	**A352_10.6 S4 ME4SB4**	**A352_10.6 S4 MX4SB4**	276	**A352_10.6 P132 BE132S4**	**A352_10.6 P132 BX132SB4**	277
144	343	1.6	10.1	8440	**A412_10.1 S4 ME4SB4**	**A412_10.1 S4 MX4SB4**	280	**A412_10.1 P132 BE132S4**	**A412_10.1 P132 BX132SB4**	281
150	329	3.0	9.7	11800	**A502_9.7 S4 ME4SB4**	**A502_9.7 S4 MX4SB4**	284	**A502_9.7 P132 BE132S4**	**A502_9.7 P132 BX132SB4**	285
157	315	1.3	9.3	6240	**A352_9.3 S4 ME4SB4**	**A352_9.3 S4 MX4SB4**	276	**A352_9.3 P132 BE132S4**	**A352_9.3 P132 BX132SB4**	277
159	311	1.8	9.2	8250	**A412_9.2 S4 ME4SB4**	**A412_9.2 S4 MX4SB4**	280	**A412_9.2 P132 BE132S4**	**A412_9.2 P132 BX132SB4**	281
173	286	1.3	8.5	6140	**A352_8.5 S4 ME4SB4**	**A352_8.5 S4 MX4SB4**	276	**A352_8.5 P132 BE132S4**	**A352_8.5 P132 BX132SB4**	277
175	282	2.0	8.3	8080	**A412_8.3 S4 ME4SB4**	**A412_8.3 S4 MX4SB4**	280	**A412_8.3 P132 BE132S4**	**A412_8.3 P132 BX132SB4**	281
205	241	2.3	7.1	7790	**A412_7.1 S4 ME4SB4**	**A412_7.1 S4 MX4SB4**	280	**A412_7.1 P132 BE132S4**	**A412_7.1 P132 BX132SB4**	281
208	238	1.6	7.0	5930	**A352_7.0 S4 ME4SB4**	**A352_7.0 S4 MX4SB4**	276	**A352_7.0 P132 BE132S4**	**A352_7.0 P132 BX132SB4**	277
228	217	1.6	6.4	5820	**A352_6.4 S4 ME4SB4**	**A352_6.4 S4 MX4SB4**	276	**A352_6.4 P132 BE132S4**	**A352_6.4 P132 BX132SB4**	277
249	198	2.8	11.7	7430	**A412_11.7 S4 ME4SB2**		280	**A412_11.7 P132 BE132SA2**		281
270	183	1.9	5.4	5610	**A352_5.4 S4 ME4SB4**	**A352_5.4 S4 MX4SB4**	276	**A352_5.4 P132 BE132S4**	**A352_5.4 P132 BX132SB4**	277
289	171	2.5	10.1	7170	**A412_10.1 S4 ME4SB2**		280	**A412_10.1 P132 BE132SA2**		281
416	119	3.1	7.0	5060	**A352_7.0 S4 ME4SB2**		276	**A352_7.0 P132 BE132SA2**		277

7.5 kW

n_2 min-1	M_2 Nm	S	i	R_{n2} N	IE2	IE3		IEC IE2	IEC IE3	
4.1	15516	0.9	355.8	75000	**A904_355.8 S4 ME4LA4**	**A904_355.8 S4 MX4LA4**	302	**A904_355.8 P132 BE132MA4**	**A904_355.8 P132 BX132MA4**	303
4.8	13296	1.1	304.9	75000	**A904_304.9 S4 ME4LA4**	**A904_304.9 S4 MX4LA4**	302	**A904_304.9 P132 BE132MA4**	**A904_304.9 P132 BX132MA4**	303
5.2	12273	1.1	281.4	75000	**A904_281.4 S4 ME4LA4**	**A904_281.4 S4 MX4LA4**	302	**A904_281.4 P132 BE132MA4**	**A904_281.4 P132 BX132MA4**	303
6.4	9875	1.4	226.4	75000	**A904_226.4 S4 ME4LA4**	**A904_226.4 S4 MX4LA4**	302	**A904_226.4 P132 BE132MA4**	**A904_226.4 P132 BX132MA4**	303
7.0	9115	1.5	209.0	75000	**A904_209.0 S4 ME4LA4**	**A904_209.0 S4 MX4LA4**	302	**A904_209.0 P132 BE132MA4**	**A904_209.0 P132 BX132MA4**	303
8.1	7849	1.8	180.0	75000	**A904_180.0 S4 ME4LA4**	**A904_180.0 S4 MX4LA4**	302	**A904_180.0 P132 BE132MA4**	**A904_180.0 P132 BX132MA4**	303
8.5	7470	1.1	171.3	65000	**A804_171.3 S4 ME4LA4**	**A804_171.3 S4 MX4LA4**	299	**A804_171.3 P132 BE132MA4**	**A804_171.3 P132 BX132MA4**	300
8.8	7245	1.9	166.1	75000	**A904_166.1 S4 ME4LA4**	**A904_166.1 S4 MX4LA4**	302	**A904_166.1 P132 BE132MA4**	**A904_166.1 P132 BX132MA4**	303
9.3	6992	1.1	156.8	65000	**A803_156.8 S4 ME4LA4**	**A803_156.8 S4 MX4LA4**	299	**A803_156.8 P132 BE132MA4**	**A803_156.8 P132 BX132MA4**	300
9.6	6733	2.0	151.0	75000	**A903_151.0 S4 ME4LA4**	**A903_151.0 S4 MX4LA4**	302	**A903_151.0 P132 BE132MA4**	**A903_151.0 P132 BX132MA4**	303
10.1	6454	1.2	144.7	65000	**A803_144.7 S4 ME4LA4**	**A803_144.7 S4 MX4LA4**	299	**A803_144.7 P132 BE132MA4**	**A803_144.7 P132 BX132MA4**	300
10.4	6216	2.1	139.4	75000	**A903_139.4 S4 ME4LA4**	**A903_139.4 S4 MX4LA4**	302	**A903_139.4 P132 BE132MA4**	**A903_139.4 P132 BX132MA4**	303
11.5	5647	2.3	126.6	75000	**A903_126.6 S4 ME4LA4**	**A903_126.6 S4 MX4LA4**	302	**A903_126.6 P132 BE132MA4**	**A903_126.6 P132 BX132MA4**	303
11.6	5601	1.4	125.6	65000	**A803_125.6 S4 ME4LA4**	**A803_125.6 S4 MX4LA4**	299	**A803_125.6 P132 BE132MA4**	**A803_125.6 P132 BX132MA4**	300
12.1	5378	0.9	120.6	50000	**A703_120.6 S4 ME4LA4**	**A703_120.6 S4 MX4LA4**	296	**A703_120.6 P132 BE132MA4**	**A703_120.6 P132 BX132MA4**	297
12.4	5213	2.7	116.9	75000	**A903_116.9 S4 ME4LA4**	**A903_116.9 S4 MX4LA4**	302	**A903_116.9 P132 BE132MA4**	**A903_116.9 P132 BX132MA4**	303
12.5	5170	1.5	116.0	65000	**A803_116.0 S4 ME4LA4**	**A803_116.0 S4 MX4LA4**	299	**A803_116.0 P132 BE132MA4**	**A803_116.0 P132 BX132MA4**	300
13.6	4763	2.9	106.8	75000	**A903_106.8 S4 ME4LA4**	**A903_106.8 S4 MX4LA4**	302	**A903_106.8 P132 BE132MA4**	**A903_106.8 P132 BX132MA4**	303

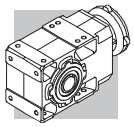

7.5 kW

n_2 min-1	M_2 Nm	S	i	R_{n2} N	IE2	IE3		IEC IE2	IEC IE3	
14.0	4648	1.1	104.2	50000	**A703_104.2 S4 ME4LA4**	**A703_104.2 S4 MX4LA4**	296	**A703_104.2 P132 BE132MA4**	**A703_104.2 P132 BX132MA4**	297
14.0	4639	1.7	104.0	65000	**A803_104.0 S4 ME4LA4**	**A803_104.0 S4 MX4LA4**	299	**A803_104.0 P132 BE132MA4**	**A803_104.0 P132 BX132MA4**	300
14.8	4397	3.2	98.6	75000	**A903_98.6 S4 ME4LA4**	**A903_98.6 S4 MX4LA4**	302	**A903_98.6 P132 BE132MA4**	**A903_98.6 P132 BX132MA4**	303
15.1	4290	1.2	96.2	50000	**A703_96.2 S4 ME4LA4**	**A703_96.2 S4 MX4LA4**	296	**A703_96.2 P132 BE132MA4**	**A703_96.2 P132 BX132MA4**	297
15.2	4282	1.9	96.0	65000	**A803_96.0 S4 ME4LA4**	**A803_96.0 S4 MX4LA4**	299	**A803_96.0 P132 BE132MA4**	**A803_96.0 P132 BX132MA4**	300
16.3	3977	2.0	89.2	65000	**A803_89.2 S4 ME4LA4**	**A803_89.2 S4 MX4LA4**	299	**A803_89.2 P132 BE132MA4**	**A803_89.2 P132 BX132MA4**	300
16.9	3832	1.3	85.9	50000	**A703_85.9 S4 ME4LA4**	**A703_85.9 S4 MX4LA4**	296	**A703_85.9 P132 BE132MA4**	**A703_85.9 P132 BX132MA4**	297
17.7	3671	2.2	82.3	65000	**A803_82.3 S4 ME4LA4**	**A803_82.3 S4 MX4LA4**	299	**A803_82.3 P132 BE132MA4**	**A803_82.3 P132 BX132MA4**	300
18.3	3537	1.4	79.3	50000	**A703_79.3 S4 ME4LA4**	**A703_79.3 S4 MX4LA4**	296	**A703_79.3 P132 BE132MA4**	**A703_79.3 P132 BX132MA4**	297
20.1	3234	1.5	72.5	50000	**A703_72.5 S4 ME4LA4**	**A703_72.5 S4 MX4LA4**	296	**A703_72.5 P132 BE132MA4**	**A703_72.5 P132 BX132MA4**	297
20.1	3227	2.5	72.4	65000	**A803_72.4 S4 ME4LA4**	**A803_72.4 S4 MX4LA4**	299	**A803_72.4 P132 BE132MA4**	**A803_72.4 P132 BX132MA4**	300
20.7	3139	0.9	70.4	30000	**A603_70.4 S4 ME4LA4**	**A603_70.4 S4 MX4LA4**	292	**A603_70.4 P132 BE132MA4**	**A603_70.4 P132 BX132MA4**	293
21.7	2985	1.7	66.9	50000	**A703_66.9 S4 ME4LA4**	**A703_66.9 S4 MX4LA4**	296	**A703_66.9 P132 BE132MA4**	**A703_66.9 P132 BX132MA4**	297
21.8	2979	2.7	66.8	65000	**A803_66.8 S4 ME4LA4**	**A803_66.8 S4 MX4LA4**	299	**A803_66.8 P132 BE132MA4**	**A803_66.8 P132 BX132MA4**	300
22.4	2898	1.0	65.0	30000	**A603_65.0 S4 ME4LA4**	**A603_65.0 S4 MX4LA4**	292	**A603_65.0 P132 BE132MA4**	**A603_65.0 P132 BX132MA4**	293
24.3	2666	3.0	59.8	63800	**A803_59.8 S4 ME4LA4**	**A803_59.8 S4 MX4LA4**	299	**A803_59.8 P132 BE132MA4**	**A803_59.8 P132 BX132MA4**	300
25.2	2571	1.9	57.7	50000	**A703_57.7 S4 ME4LA4**	**A703_57.7 S4 MX4LA4**	296	**A703_57.7 P132 BE132MA4**	**A703_57.7 P132 BX132MA4**	297
26.2	2479	1.1	55.6	30000	**A603_55.6 S4 ME4LA4**	**A603_55.6 S4 MX4LA4**	292	**A603_55.6 P132 BE132MA4**	**A603_55.6 P132 BX132MA4**	293
26.4	2461	3.2	55.2	62600	**A803_55.2 S4 ME4LA4**	**A803_55.2 S4 MX4LA4**	299	**A803_55.2 P132 BE132MA4**	**A803_55.2 P132 BX132MA4**	300
27.3	2374	2.1	53.2	50000	**A703_53.2 S4 ME4LA4**	**A703_53.2 S4 MX4LA4**	296	**A703_53.2 P132 BE132MA4**	**A703_53.2 P132 BX132MA4**	297
28.3	2289	1.2	51.3	30000	**A603_51.3 S4 ME4LA4**	**A603_51.3 S4 MX4LA4**	292	**A603_51.3 P132 BE132MA4**	**A603_51.3 P132 BX132MA4**	293
29.7	2185	2.3	49.0	50000	**A703_49.0 S4 ME4LA4**	**A703_49.0 S4 MX4LA4**	296	**A703_49.0 P132 BE132MA4**	**A703_49.0 P132 BX132MA4**	297
32	2017	2.4	45.2	50000	**A703_45.2 S4 ME4LA4**	**A703_45.2 S4 MX4LA4**	296	**A703_45.2 P132 BE132MA4**	**A703_45.2 P132 BX132MA4**	297
32	2015	1.4	45.2	30000	**A603_45.2 S4 ME4LA4**	**A603_45.2 S4 MX4LA4**	292	**A603_45.2 P132 BE132MA4**	**A603_45.2 P132 BX132MA4**	293
35	1860	1.5	41.7	30000	**A603_41.7 S4 ME4LA4**	**A603_41.7 S4 MX4LA4**	292	**A603_41.7 P132 BE132MA4**	**A603_41.7 P132 BX132MA4**	293
36	1797	1.1	40.3	30000	**A553_40.3 S4 ME4LA4**	**A553_40.3 S4 MX4LA4**	288	**A553_40.3 P132 BE132MA4**	**A553_40.3 P132 BX132MA4**	289
38	1712	2.8	38.4	50000	**A703_38.4 S4 ME4LA4**	**A703_38.4 S4 MX4LA4**	296	**A703_38.4 P132 BE132MA4**	**A703_38.4 P132 BX132MA4**	297
41	1587	0.9	35.6	10100	**A503_35.6 S4 ME4LA4**	**A503_35.6 S4 MX4LA4**	284	**A503_35.6 P132 BE132MA4**	**A503_35.6 P132 BX132MA4**	285
41	1580	2.8	35.4	50000	**A703_35.4 S4 ME4LA4**	**A703_35.4 S4 MX4LA4**	296	**A703_35.4 P132 BE132MA4**	**A703_35.4 P132 BX132MA4**	297
42	1529	1.8	34.3	30000	**A603_34.3 S4 ME4LA4**	**A603_34.3 S4 MX4LA4**	292	**A603_34.3 P132 BE132MA4**	**A603_34.3 P132 BX132MA4**	293
45	1444	1.0	32.4	10300	**A503_32.4 S4 ME4LA4**	**A503_32.4 S4 MX4LA4**	284	**A503_32.4 P132 BE132MA4**	**A503_32.4 P132 BX132MA4**	285
46	1412	2.0	31.7	30000	**A603_31.7 S4 ME4LA4**	**A603_31.7 S4 MX4LA4**	292	**A603_31.7 P132 BE132MA4**	**A603_31.7 P132 BX132MA4**	293
49	1335	1.5	29.9	30000	**A553_29.9 S4 ME4LA4**	**A553_29.9 S4 MX4LA4**	288	**A553_29.9 P132 BE132MA4**	**A553_29.9 P132 BX132MA4**	289
52	1242	2.3	27.9	30000	**A603_27.9 S4 ME4LA4**	**A603_27.9 S4 MX4LA4**	292	**A603_27.9 P132 BE132MA4**	**A603_27.9 P132 BX132MA4**	293
55	1179	1.3	26.4	10700	**A503_26.4 S4 ME4LA4**	**A503_26.4 S4 MX4LA4**	284	**A503_26.4 P132 BE132MA4**	**A503_26.4 P132 BX132MA4**	285
57	1146	2.4	25.7	30000	**A603_25.7 S4 ME4LA4**	**A603_25.7 S4 MX4LA4**	292	**A603_25.7 P132 BE132MA4**	**A603_25.7 P132 BX132MA4**	293
61	1072	1.4	24.0	10800	**A503_24.0 S4 ME4LA4**	**A503_24.0 S4 MX4LA4**	284	**A503_24.0 P132 BE132MA4**	**A503_24.0 P132 BX132MA4**	285
61	1061	1.8	23.8	28800	**A553_23.8 S4 ME4LA4**	**A553_23.8 S4 MX4LA4**	288	**A553_23.8 P132 BE132MA4**	**A553_23.8 P132 BX132MA4**	289
70	963	1.2	20.9	13700	**A502_20.9 S4 ME4LA4**	**A502_20.9 S4 MX4LA4**	284	**A502_20.9 P132 BE132MA4**	**A502_20.9 P132 BX132MA4**	285
71	949	2.1	20.6	30000	**A602_20.6 S4 ME4LA4**	**A602_20.6 S4 MX4LA4**	292	**A602_20.6 P132 BE132MA4**	**A602_20.6 P132 BX132MA4**	293
76	886	2.0	19.2	28800	**A552_19.2 S4 ME4LA4**	**A552_19.2 S4 MX4LA4**	288	**A552_19.2 P132 BE132MA4**	**A552_19.2 P132 BX132MA4**	289
87	771	2.6	16.7	30000	**A602_16.7 S4 ME4LA4**	**A602_16.7 S4 MX4LA4**	292	**A602_16.7 P132 BE132MA4**	**A602_16.7 P132 BX132MA4**	293
88	763	1.6	16.6	13000	**A502_16.6 S4 ME4LA4**	**A502_16.6 S4 MX4LA4**	284	**A502_16.6 P132 BE132MA4**	**A502_16.6 P132 BX132MA4**	285
93	722	2.5	15.7	27300	**A552_15.7 S4 ME4LA4**	**A552_15.7 S4 MX4LA4**	288	**A552_15.7 P132 BE132MA4**	**A552_15.7 P132 BX132MA4**	289
106	634	0.9	13.8	8130	**A412_13.8 S4 ME4LA4**	**A412_13.8 S4 MX4LA4**	280	**A412_13.8 P132 BE132MA4**	**A412_13.8 P132 BX132MA4**	281
111	604	1.8	13.1	12300	**A502_13.1 S4 ME4LA4**	**A502_13.1 S4 MX4LA4**	284	**A502_13.1 P132 BE132MA4**	**A502_13.1 P132 BX132MA4**	285
111	602	3.0	13.1	26100	**A552_13.1 S4 ME4LA4**	**A552_13.1 S4 MX4LA4**	288	**A552_13.1 P132 BE132MA4**	**A552_13.1 P132 BX132MA4**	289
115	585	3.4	12.7	30000	**A602_12.7 S4 ME4LA4**	**A602_12.7 S4 MX4LA4**	292	**A602_12.7 P132 BE132MA4**	**A602_12.7 P132 BX132MA4**	293
124	541	1.0	11.7	7970	**A412_11.7 S4 ME4LA4**	**A412_11.7 S4 MX4LA4**	280	**A412_11.7 P132 BE132MA4**	**A412_11.7 P132 BX132MA4**	281
144	467	1.1	10.1	7850	**A412_10.1 S4 ME4LA4**	**A412_10.1 S4 MX4LA4**	280	**A412_10.1 P132 BE132MA4**	**A412_10.1 P132 BX132MA4**	281
149	448	2.2	9.7	11500	**A502_9.7 S4 ME4LA4**	**A502_9.7 S4 MX4LA4**	284	**A502_9.7 P132 BE132MA4**	**A502_9.7 P132 BX132MA4**	285
156	429	0.9	9.3	5650	**A352_9.3 S4 ME4LA4**	**A352_9.3 S4 MX4LA4**	276	**A352_9.3 P132 BE132MA4**	**A352_9.3 P132 BX132MA4**	277
158	424	1.3	9.2	7710	**A412_9.2 S4 ME4LA4**	**A412_9.2 S4 MX4LA4**	280	**A412_9.2 P132 BE132MA4**	**A412_9.2 P132 BX132MA4**	281
172	390	1.0	8.5	5600	**A352_8.5 S4 ME4LA4**	**A352_8.5 S4 MX4LA4**	276	**A352_8.5 P132 BE132MA4**	**A352_8.5 P132 BX132MA4**	277
175	384	1.4	8.3	7590	**A412_8.3 S4 ME4LA4**	**A412_8.3 S4 MX4LA4**	280	**A412_8.3 P132 BE132MA4**	**A412_8.3 P132 BX132MA4**	281
188	356	2.7	7.7	10800	**A502_7.7 S4 ME4LA4**	**A502_7.7 S4 MX4LA4**	284	**A502_7.7 P132 BE132MA4**	**A502_7.7 P132 BX132MA4**	285
204	328	1.7	7.1	7370	**A412_7.1 S4 ME4LA4**	**A412_7.1 S4 MX4LA4**	280	**A412_7.1 P132 BE132MA4**	**A412_7.1 P132 BX132MA4**	281
207	323	1.1	7.0	5490	**A352_7.0 S4 ME4LA4**	**A352_7.0 S4 MX4LA4**	276	**A352_7.0 P132 BE132MA4**	**A352_7.0 P132 BX132MA4**	277
227	295	1.2	6.4	5420	**A352_6.4 S4 ME4LA4**	**A352_6.4 S4 MX4LA4**	276	**A352_6.4 P132 BE132MA4**	**A352_6.4 P132 BX132MA4**	277
269	249	1.4	5.4	5270	**A352_5.4 S4 ME4LA4**	**A352_5.4 S4 MX4LA4**	276	**A352_5.4 P132 BE132MA4**	**A352_5.4 P132 BX132MA4**	277
277	242	2.3	5.2	6920	**A412_5.2 S4 ME4LA4**	**A412_5.2 S4 MX4LA4**	280	**A412_5.2 P132 BE132MA4**	**A412_5.2 P132 BX132MA4**	281
318	212	2.5	9.2	6710	**A412_9.2 S4 ME4LA2**		280	**A412_9.2 P132 BE132SB2**		281
351	192	2.7	8.3	6550	**A412_8.3 S4 ME4LA2**		280	**A412_8.3 P132 BE132SB2**		281
416	162	2.3	7.0	4830	**A352_7.0 S4 ME4LA2**		276	**A352_7.0 P132 BE132SB2**		277
540	125	2.7	5.4	4550	**A352_5.4 S4 ME4LA2**		276	**A352_5.4 P132 BE132SB2**		277

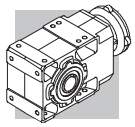

9.2 kW

n_2 min-1	M_2 Nm	S	i	R_{n2} N	IE2	IE3		IEC IE2	IEC IE3	
5.2	15279	0.9	281.4	75000	**A904_281.4 S4 ME4LB4**		302	**A904_281.4 P132 BE132MB4**	**A904_281.4 P160 BX160MA4**	303
6.4	12293	1.1	226.4	75000	**A904_226.4 S4 ME4LB4**		302	**A904_226.4 P132 BE132MB4**	**A904_226.4 P160 BX160MA4**	303
6.9	11347	1.2	209.0	75000	**A904_209.0 S4 ME4LB4**		302	**A904_209.0 P132 BE132MB4**	**A904_209.0 P160 BX160MA4**	303
8.1	9771	1.4	180.0	75000	**A904_180.0 S4 ME4LB4**		302	**A904_180.0 P132 BE132MB4**	**A904_180.0 P160 BX160MA4**	303
8.5	9300	0.9	171.3	65000	**A804_171.3 S4 ME4LB4**		299	**A804_171.3 P132 BE132MB4**		300
8.7	9019	1.6	166.1	75000	**A904_166.1 S4 ME4LB4**		302	**A904_166.1 P132 BE132MB4**	**A904_166.1 P160 BX160MA4**	303
9.2	8704	0.9	156.8	65000	**A803_156.8 S4 ME4LB4**	**A803_156.8 S5 MX5SA4**	299	**A803_156.8 P132 BE132MB4**	**A803_156.8 P160 BX160MA4**	300
9.6	8383	1.6	151.0	75000	**A903_151.0 S4 ME4LB4**	**A903_151.0 S5 MX5SA4**	302	**A903_151.0 P132 BE132MB4**	**A903_151.0 P160 BX160MA4**	303
10.0	8034	1.0	144.7	65000	**A803_144.7 S4 ME4LB4**	**A803_144.7 S5 MX5SA4**	299	**A803_144.7 P132 BE132MB4**	**A803_144.7 P160 BX160MA4**	300
10.4	7738	1.6	139.4	75000	**A903_139.4 S4 ME4LB4**	**A903_139.4 S5 MX5SA4**	302	**A903_139.4 P132 BE132MB4**	**A903_139.4 P160 BX160MA4**	303
11.4	7030	1.9	126.6	75000	**A903_126.6 S4 ME4LB4**	**A903_126.6 S5 MX5SA4**	302	**A903_126.6 P132 BE132MB4**	**A903_126.6 P160 BX160MA4**	303
11.5	6973	1.1	125.6	65000	**A803_125.6 S4 ME4LB4**	**A803_125.6 S5 MX5SA4**	299	**A803_125.6 P132 BE132MB4**	**A803_125.6 P160 BX160MA4**	300
12.4	6489	2.2	116.9	75000	**A903_116.9 S4 ME4LB4**	**A903_116.9 S5 MX5SA4**	302	**A903_116.9 P132 BE132MB4**	**A903_116.9 P160 BX160MA4**	303
12.5	6437	1.2	116.0	65000	**A803_116.0 S4 ME4LB4**	**A803_116.0 S5 MX5SA4**	299	**A803_116.0 P132 BE132MB4**	**A803_116.0 P160 BX160MA4**	300
13.6	5930	2.4	106.8	75000	**A903_106.8 S4 ME4LB4**	**A903_106.8 S5 MX5SA4**	302	**A903_106.8 P132 BE132MB4**	**A903_106.8 P160 BX160MA4**	303
13.9	5775	1.4	104.0	65000	**A803_104.0 S4 ME4LB4**	**A803_104.0 S5 MX5SA4**	299	**A803_104.0 P132 BE132MB4**	**A803_104.0 P160 BX160MA4**	300
14.7	5473	2.6	98.6	75000	**A903_98.6 S4 ME4LB4**	**A903_98.6 S5 MX5SA4**	302	**A903_98.6 P132 BE132MB4**	**A903_98.6 P160 BX160MA4**	303
15.1	5341	0.9	96.2	50000	**A703_96.2 S4 ME4LB4**	**A703_96.2 S5 MX5SA4**	296	**A703_96.2 P132 BE132MB4**	**A703_96.2 P160 BX160MA4**	297
15.1	5331	1.5	96.0	65000	**A803_96.0 S4 ME4LB4**	**A803_96.0 S5 MX5SA4**	299	**A803_96.0 P132 BE132MB4**	**A803_96.0 P160 BX160MA4**	300
16.3	4950	1.6	89.2	65000	**A803_89.2 S4 ME4LB4**	**A803_89.2 S5 MX5SA4**	299	**A803_89.2 P132 BE132MB4**	**A803_89.2 P160 BX160MA4**	300
16.7	4833	2.9	87.1	75000	**A903_87.1 S4 ME4LB4**	**A903_87.1 S5 MX5SA4**	302	**A903_87.1 P132 BE132MB4**	**A903_87.1 P160 BX160MA4**	303
16.9	4770	1.0	85.9	50000	**A703_85.9 S4 ME4LB4**	**A703_85.9 S5 MX5SA4**	296	**A703_85.9 P132 BE132MB4**	**A703_85.9 P160 BX160MA4**	297
17.6	4570	1.8	82.3	65000	**A803_82.3 S4 ME4LB4**	**A803_82.3 S5 MX5SA4**	299	**A803_82.3 P132 BE132MB4**	**A803_82.3 P160 BX160MA4**	300
18.0	4461	3.1	80.4	75000	**A903_80.4 S4 ME4LB4**	**A903_80.4 S5 MX5SA4**	302	**A903_80.4 P132 BE132MB4**	**A903_80.4 P160 BX160MA4**	303
18.3	4403	1.1	79.3	50000	**A703_79.3 S4 ME4LB4**	**A703_79.3 S5 MX5SA4**	296	**A703_79.3 P132 BE132MB4**	**A703_79.3 P160 BX160MA4**	297
19.5	4134	3.4	74.5	75000	**A903_74.5 S4 ME4LB4**	**A903_74.5 S5 MX5SA4**	302	**A903_74.5 P132 BE132MB4**	**A903_74.5 P160 BX160MA4**	303
20.0	4026	1.2	72.5	50000	**A703_72.5 S4 ME4LB4**	**A703_72.5 S5 MX5SA4**	296	**A703_72.5 P132 BE132MB4**	**A703_72.5 P160 BX160MA4**	297
20.0	4017	2.0	72.4	65000	**A803_72.4 S4 ME4LB4**	**A803_72.4 S5 MX5SA4**	299	**A803_72.4 P132 BE132MB4**	**A803_72.4 P160 BX160MA4**	300
21.7	3716	1.3	66.9	50000	**A703_66.9 S4 ME4LB4**	**A703_66.9 S5 MX5SA4**	296	**A703_66.9 P132 BE132MB4**	**A703_66.9 P160 BX160MA4**	297
21.7	3708	2.2	66.8	63800	**A803_66.8 S4 ME4LB4**	**A803_66.8 S5 MX5SA4**	299	**A803_66.8 P132 BE132MB4**	**A803_66.8 P160 BX160MA4**	300
24.3	3318	2.4	59.8	62400	**A803_59.8 S4 ME4LB4**	**A803_59.8 S5 MX5SA4**	299	**A803_59.8 P132 BE132MB4**	**A803_59.8 P160 BX160MA4**	300
25.1	3201	1.6	57.7	50000	**A703_57.7 S4 ME4LB4**	**A703_57.7 S5 MX5SA4**	296	**A703_57.7 P132 BE132MB4**	**A703_57.7 P160 BX160MA4**	297
26.1	3087	0.9	55.6	30000	**A603_55.6 S4 ME4LB4**	**A603_55.6 S5 MX5SA4**	292	**A603_55.6 P132 BE132MB4**	**A603_55.6 P160 BX160MA4**	293
26.3	3063	2.6	55.2	61300	**A803_55.2 S4 ME4LB4**	**A803_55.2 S5 MX5SA4**	299	**A803_55.2 P132 BE132MB4**	**A803_55.2 P160 BX160MA4**	300
27.2	2955	1.7	53.2	50000	**A703_53.2 S4 ME4LB4**	**A703_53.2 S5 MX5SA4**	296	**A703_53.2 P132 BE132MB4**	**A703_53.2 P160 BX160MA4**	297
28.3	2849	1.0	51.3	30000	**A603_51.3 S4 ME4LB4**	**A603_51.3 S5 MX5SA4**	292	**A603_51.3 P132 BE132MB4**	**A603_51.3 P160 BX160MA4**	293
29.6	2720	1.8	49.0	50000	**A703_49.0 S4 ME4LB4**	**A703_49.0 S5 MX5SA4**	296	**A703_49.0 P132 BE132MB4**	**A703_49.0 P160 BX160MA4**	297
30	2675	3.0	48.2	59500	**A803_48.2 S4 ME4LB4**	**A803_48.2 S5 MX5SA4**	299	**A803_48.2 P132 BE132MB4**	**A803_48.2 P160 BX160MA4**	300
32	2511	1.9	45.2	50000	**A703_45.2 S4 ME4LB4**	**A703_45.2 S5 MX5SA4**	296	**A703_45.2 P132 BE132MB4**	**A703_45.2 P160 BX160MA4**	297
32	2508	1.1	45.2	30000	**A603_45.2 S4 ME4LB4**	**A603_45.2 S5 MX5SA4**	292	**A603_45.2 P132 BE132MB4**	**A603_45.2 P160 BX160MA4**	293
33	2469	3.0	44.5	58400	**A803_44.5 S4 ME4LB4**	**A803_44.5 S5 MX5SA4**	299	**A803_44.5 P132 BE132MB4**	**A803_44.5 P160 BX160MA4**	300
35	2315	1.2	41.7	30000	**A603_41.7 S4 ME4LB4**	**A603_41.7 S5 MX5SA4**	292	**A603_41.7 P132 BE132MB4**	**A603_41.7 P160 BX160MA4**	293
38	2131	2.3	38.4	50000	**A703_38.4 S4 ME4LB4**	**A703_38.4 S5 MX5SA4**	296	**A703_38.4 P132 BE132MB4**	**A703_38.4 P160 BX160MA4**	297
41	1967	2.3	35.4	50000	**A703_35.4 S4 ME4LB4**	**A703_35.4 S5 MX5SA4**	296	**A703_35.4 P132 BE132MB4**	**A703_35.4 P160 BX160MA4**	297
42	1904	1.5	34.3	30000	**A603_34.3 S4 ME4LB4**	**A603_34.3 S5 MX5SA4**	292	**A603_34.3 P132 BE132MB4**	**A603_34.3 P160 BX160MA4**	293
46	1758	1.6	31.7	30000	**A603_31.7 S4 ME4LB4**	**A603_31.7 S5 MX5SA4**	292	**A603_31.7 P132 BE132MB4**	**A603_31.7 P160 BX160MA4**	293
48	1661	1.2	29.9	29100	**A553_29.9 S4 ME4LB4**	**A553_29.9 S5 MX5SA4**	288	**A553_29.9 P132 BE132MB4**	**A553_29.9 P160 BX160MA4**	289
52	1546	1.8	27.9	30000	**A603_27.9 S4 ME4LB4**	**A603_27.9 S5 MX5SA4**	292	**A603_27.9 P132 BE132MB4**	**A603_27.9 P160 BX160MA4**	293
55	1468	1.0	26.4	9130	**A503_26.4 S4 ME4LB4**	**A503_26.4 S5 MX5SA4**	284	**A503_26.4 P132 BE132MB4**	**A503_26.4 P160 BX160MA4**	285
56	1427	2.0	25.7	30000	**A603_25.7 S4 ME4LB4**	**A603_25.7 S5 MX5SA4**	292	**A603_25.7 P132 BE132MB4**	**A603_25.7 P160 BX160MA4**	293
60	1335	1.1	24.0	9370	**A503_24.0 S4 ME4LB4**	**A503_24.0 S5 MX5SA4**	284	**A503_24.0 P132 BE132MB4**	**A503_24.0 P160 BX160MA4**	285
61	1321	1.5	23.8	27900	**A553_23.8 S4 ME4LB4**	**A553_23.8 S5 MX5SA4**	288	**A553_23.8 P132 BE132MB4**	**A553_23.8 P160 BX160MA4**	289
68	1183	3.4	21.3	46000	**A703_21.3 S4 ME4LB4**	**A703_21.3 S5 MX5SA4**	296	**A703_21.3 P132 BE132MB4**	**A703_21.3 P160 BX160MA4**	297
69	1199	1.0	20.9	13000	**A502_20.9 S4 ME4LB4**	**A502_20.9 S5 MX5SA4**	284	**A502_20.9 P132 BE132MB4**	**A502_20.9 P160 BX160MA4**	285
70	1181	1.7	20.6	30000	**A602_20.6 S4 ME4LB4**	**A602_20.6 S5 MX5SA4**	292	**A602_20.6 P132 BE132MB4**	**A602_20.6 P160 BX160MA4**	293
74	1092	3.4	19.7	45100	**A703_19.7 S4 ME4LB4**	**A703_19.7 S5 MX5SA4**	296	**A703_19.7 P132 BE132MB4**	**A703_19.7 P160 BX160MA4**	297
75	1103	1.6	19.2	28400	**A552_19.2 S4 ME4LB4**	**A552_19.2 S5 MX5SA4**	288	**A552_19.2 P132 BE132MB4**	**A552_19.2 P160 BX160MA4**	289

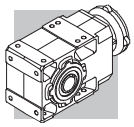

9.2 kW

n_2 min-1	M_2 Nm	S	i	R_{n2} N	IE2	IE3		IE2	IEC IE3	
87	960	2.1	16.7	30000	**A602_16.7 S4 ME4LB4**	**A602_16.7 S5 MX5SA4**	292	**A602_16.7 P132 BE132MB4**	**A602_16.7 P160 BX160MA4**	293
88	950	1.3	16.6	12500	**A502_16.6 S4 ME4LB4**	**A502_16.6 S5 MX5SA4**	284	**A502_16.6 P132 BE132MB4**	**A502_16.6 P160 BX160MA4**	285
92	899	2.0	15.7	27000	**A552_15.7 S4 ME4LB4**	**A552_15.7 S5 MX5SA4**	288	**A552_15.7 P132 BE132MB4**	**A552_15.7 P160 BX160MA4**	289
111	752	1.5	13.1	11900	**A502_13.1 S4 ME4LB4**	**A502_13.1 S5 MX5SA4**	284	**A502_13.1 P132 BE132MB4**	**A502_13.1 P160 BX160MA4**	285
111	750	2.4	13.1	25800	**A552_13.1 S4 ME4LB4**	**A552_13.1 S5 MX5SA4**	288	**A552_13.1 P132 BE132MB4**	**A552_13.1 P160 BX160MA4**	289
114	728	2.7	12.7	30000	**A602_12.7 S4 ME4LB4**	**A602_12.7 S5 MX5SA4**	292	**A602_12.7 P132 BE132MB4**	**A602_12.7 P160 BX160MA4**	293
123	651	2.5	23.8	24100	**A553_23.8 S4 ME4LB2**	**A553_23.8 S5 ME4LB2**	288	**A553_23.8 P132 BE132MB2**	**A553_23.8 P160 BE132MB2**	289
140	594	3.0	10.4	24200	**A552_10.4 S4 ME4LB4**	**A552_10.4 S5 MX5SA4**	288	**A552_10.4 P132 BE132MB4**	**A552_10.4 P160 BX160MA4**	289
141	592	3.4	10.3	30000	**A602_10.3 S4 ME4LB4**	**A602_10.3 S5 MX5SA4**	292	**A602_10.3 P132 BE132MB4**	**A602_10.3 P160 BX160MA4**	293
143	581	0.9	10.1	7340	**A412_10.1 S4 ME4LB4**		280	**A412_10.1 P132 BE132MB4**		281
149	558	1.8	9.7	11200	**A502_9.7 S4 ME4LB4**	**A502_9.7 S5 MX5SA4**	284	**A502_9.7 P132 BE132MB4**	**A502_9.7 P160 BX160MA4**	285
158	527	1.0	9.2	7250	**A412_9.2 S4 ME4LB4**		280	**A412_9.2 P132 BE132MB4**		281
174	478	1.2	8.3	7170	**A412_8.3 S4 ME4LB4**		280	**A412_8.3 P132 BE132MB4**		281
187	444	2.1	7.7	10600	**A502_7.7 S4 ME4LB4**	**A502_7.7 S5 MX5SA4**	284	**A502_7.7 P132 BE132MB4**	**A502_7.7 P160 BX160MA4**	285
204	408	1.3	7.1	7020	**A412_7.1 S4 ME4LB4**		280	**A412_7.1 P132 BE132MB4**		281
206	403	0.9	7.0	5110	**A352_7.0 S4 ME4LB4**		276	**A352_7.0 P132 BE132MB4**		277
226	368	1.0	6.4	5070	**A352_6.4 S4 ME4LB4**		276	**A352_6.4 P132 BE132MB4**		277
268	310	1.1	5.4	4980	**A352_5.4 S4 ME4LB4**		276	**A352_5.4 P132 BE132MB4**		277
276	301	1.8	5.2	6660	**A412_5.2 S4 ME4LB4**		280	**A412_5.2 P132 BE132MB4**		281
317	260	2.0	9.2	6480	**A412_9.2 S4 ME4LB2**		280	**A412_9.2 P132 BE132MB2**		281
377	219	3.4	7.7	8780	**A502_7.7 S4 ME4LB2**		284	**A502_7.7 P132 BE132MB2**		285
539	153	2.2	5.4	4410	**A352_5.4 S4 ME4LB2**		276	**A352_5.4 P132 BE132MB2**		277
557	148	3.0	5.2	5690	**A412_5.2 S4 ME4LB2**		280	**A412_5.2 P132 BE132MB2**		281

11 kW

n_2 min-1	M_2 Nm	S	i	R_{n2} N	IE2	IE3		IE2	IEC IE3	
6.5	14510	1.0	226.4	75000	**A904_226.4 S5 ME5SA4**	**A904_226.4 S5 MX5SB4**	302	**A904_226.4 P160 BE160M4**	**A904_226.4 P160 BX160MB4**	303
7.0	13393	1.0	209.0	75000	**A904_209.0 S5 ME5SA4**	**A904_209.0 S5 MX5SB4**	302	**A904_209.0 P160 BE160M4**	**A904_209.0 P160 BX160MB4**	303
8.2	11533	1.2	180.0	75000	**A904_180.0 S5 ME5SA4**	**A904_180.0 S5 MX5SB4**	302	**A904_180.0 P160 BE160M4**	**A904_180.0 P160 BX160MB4**	303
8.8	10645	1.3	166.1	75000	**A904_166.1 S5 ME5SA4**	**A904_166.1 S5 MX5SB4**	302	**A904_166.1 P160 BE160M4**	**A904_166.1 P160 BX160MB4**	303
9.7	9894	1.4	151.0	75000	**A903_151.0 S5 ME5SA4**	**A903_151.0 S5 MX5SB4**	302	**A903_151.0 P160 BE160M4**	**A903_151.0 P160 BX160MB4**	303
10.5	9133	1.4	139.4	75000	**A903_139.4 S5 ME5SA4**	**A903_139.4 S5 MX5SB4**	302	**A903_139.4 P160 BE160M4**	**A903_139.4 P160 BX160MB4**	303
11.6	8298	1.6	126.6	75000	**A903_126.6 S5 ME5SA4**	**A903_126.6 S5 MX5SB4**	302	**A903_126.6 P160 BE160M4**	**A903_126.6 P160 BX160MB4**	303
11.7	8231	1.0	125.6	65000	**A803_125.6 S5 ME5SA4**	**A803_125.6 S5 MX5SB4**	299	**A803_125.6 P160 BE160M4**	**A803_125.6 P160 BX160MB4**	300
12.6	7660	1.8	116.9	75000	**A903_116.9 S5 ME5SA4**	**A903_116.9 S5 MX5SB4**	302	**A903_116.9 P160 BE160M4**	**A903_116.9 P160 BX160MB4**	303
12.7	7597	1.1	116.0	65000	**A803_116.0 S5 ME5SA4**	**A803_116.0 S5 MX5SB4**	299	**A803_116.0 P160 BE160M4**	**A803_116.0 P160 BX160MB4**	300
13.8	6999	2.0	106.8	75000	**A903_106.8 S5 ME5SA4**	**A903_106.8 S5 MX5SB4**	302	**A903_106.8 P160 BE160M4**	**A903_106.8 P160 BX160MB4**	303
14.1	6816	1.2	104.0	65000	**A803_104.0 S5 ME5SA4**	**A803_104.0 S5 MX5SB4**	299	**A803_104.0 P160 BE160M4**	**A803_104.0 P160 BX160MB4**	300
14.9	6460	2.2	98.6	75000	**A903_98.6 S5 ME5SA4**	**A903_98.6 S5 MX5SB4**	302	**A903_98.6 P160 BE160M4**	**A903_98.6 P160 BX160MB4**	303
15.3	6292	1.3	96.0	65000	**A803_96.0 S5 ME5SA4**	**A803_96.0 S5 MX5SB4**	299	**A803_96.0 P160 BE160M4**	**A803_96.0 P160 BX160MB4**	300
16.5	5843	1.4	89.2	65000	**A803_89.2 S5 ME5SA4**	**A803_89.2 S5 MX5SB4**	299	**A803_89.2 P160 BE160M4**	**A803_89.2 P160 BX160MB4**	300
16.9	5705	2.5	87.1	75000	**A903_87.1 S5 ME5SA4**	**A903_87.1 S5 MX5SB4**	302	**A903_87.1 P160 BE160M4**	**A903_87.1 P160 BX160MB4**	303
17.9	5394	1.5	82.3	64500	**A803_82.3 S5 ME5SA4**	**A803_82.3 S5 MX5SB4**	299	**A803_82.3 P160 BE160M4**	**A803_82.3 P160 BX160MB4**	300
18.3	5266	2.7	80.4	75000	**A903_80.4 S5 ME5SA4**	**A903_80.4 S5 MX5SB4**	302	**A903_80.4 P160 BE160M4**	**A903_80.4 P160 BX160MB4**	303
18.5	5198	1.0	79.3	50000	**A703_79.3 S5 ME5SA4**	**A703_79.3 S5 MX5SB4**	296	**A703_79.3 P160 BE160M4**	**A703_79.3 P160 BX160MB4**	297
19.7	4880	2.9	74.5	75000	**A903_74.5 S5 ME5SA4**	**A903_74.5 S5 MX5SB4**	302	**A903_74.5 P160 BE160M4**	**A903_74.5 P160 BX160MB4**	303
20.3	4752	1.1	72.5	50000	**A703_72.5 S5 ME5SA4**	**A703_72.5 S5 MX5SB4**	296	**A703_72.5 P160 BE160M4**	**A703_72.5 P160 BX160MB4**	297
20.3	4742	1.7	72.4	63200	**A803_72.4 S5 ME5SA4**	**A803_72.4 S5 MX5SB4**	299	**A803_72.4 P160 BE160M4**	**A803_72.4 P160 BX160MB4**	300
21.4	4505	3.1	68.8	75000	**A903_68.8 S5 ME5SA4**	**A903_68.8 S5 MX5SB4**	302	**A903_68.8 P160 BE160M4**	**A903_68.8 P160 BX160MB4**	303
22.0	4386	1.1	66.9	50000	**A703_66.9 S5 ME5SA4**	**A703_66.9 S5 MX5SB4**	296	**A703_66.9 P160 BE160M4**	**A703_66.9 P160 BX160MB4**	297

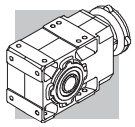

11 kW

n_2 min-1	M_2 Nm	S	i	R_{n2} N	IE2	IE3		IEC IE2	IEC IE3	
22.0	4377	1.8	66.8	62200	**A803_66.8 S5 ME5SA4**	**A803_66.8 S5 MX5SB4**	299	**A803_66.8 P160 BE160M4**	**A803_66.8 P160 BX160MB4**	300
24.6	3917	2.0	59.8	60900	**A803_59.8 S5 ME5SA4**	**A803_59.8 S5 MX5SB4**	299	**A803_59.8 P160 BE160M4**	**A803_59.8 P160 BX160MB4**	300
24.7	3906	3.6	59.6	75000	**A903_59.6 S5 ME5SA4**	**A903_59.6 S5 MX5SB4**	302	**A903_59.6 P160 BE160M4**	**A903_59.6 P160 BX160MB4**	303
25.5	3778	1.3	57.7	50000	**A703_57.7 S5 ME5SA4**	**A703_57.7 S5 MX5SB4**	296	**A703_57.7 P160 BE160M4**	**A703_57.7 P160 BX160MB4**	297
26.6	3615	2.2	55.2	59900	**A803_55.2 S5 ME5SA4**	**A803_55.2 S5 MX5SB4**	299	**A803_55.2 P160 BE160M4**	**A803_55.2 P160 BX160MB4**	300
27.6	3488	1.4	53.2	50000	**A703_53.2 S5 ME5SA4**	**A703_53.2 S5 MX5SB4**	296	**A703_53.2 P160 BE160M4**	**A703_53.2 P160 BX160MB4**	297
30	3210	1.6	49.0	50000	**A703_49.0 S5 ME5SA4**	**A703_49.0 S5 MX5SB4**	296	**A703_49.0 P160 BE160M4**	**A703_49.0 P160 BX160MB4**	297
31	3157	2.5	48.2	58300	**A803_48.2 S5 ME5SA4**	**A803_48.2 S5 MX5SB4**	299	**A803_48.2 P160 BE160M4**	**A803_48.2 P160 BX160MB4**	300
33	2964	1.6	45.2	50000	**A703_45.2 S5 ME5SA4**	**A703_45.2 S5 MX5SB4**	296	**A703_45.2 P160 BE160M4**	**A703_45.2 P160 BX160MB4**	297
33	2961	0.9	45.2	30000	**A603_45.2 S5 ME5SA4**	**A603_45.2 S5 MX5SB4**	292	**A603_45.2 P160 BE160M4**	**A603_45.2 P160 BX160MB4**	293
33	2914	2.6	44.5	57300	**A803_44.5 S5 ME5SA4**	**A803_44.5 S5 MX5SB4**	299	**A803_44.5 P160 BE160M4**	**A803_44.5 P160 BX160MB4**	300
35	2733	1.0	41.7	30000	**A603_41.7 S5 ME5SA4**	**A603_41.7 S5 MX5SB4**	292	**A603_41.7 P160 BE160M4**	**A603_41.7 P160 BX160MB4**	293
38	2523	3.0	38.5	55500				**A803_38.5 P160 BE160M4**	**A803_38.5 P160 BX160MB4**	300
38	2515	1.9	38.4	50000	**A703_38.4 S5 ME5SA4**	**A703_38.4 S5 MX5SB4**	296	**A703_38.4 P160 BE160M4**	**A703_38.4 P160 BX160MB4**	297
41	2328	3.0	35.5	54500				**A803_35.5 P160 BE160M4**	**A803_35.5 P160 BX160MB4**	300
41	2321	1.9	35.4	50000	**A703_35.4 S5 ME5SA4**	**A703_35.4 S5 MX5SB4**	296	**A703_35.4 P160 BE160M4**	**A703_35.4 P160 BX160MB4**	297
43	2247	1.2	34.3	30000	**A603_34.3 S5 ME5SA4**	**A603_34.3 S5 MX5SB4**	292	**A603_34.3 P160 BE160M4**	**A603_34.3 P160 BX160MB4**	293
46	2074	1.3	31.7	30000	**A603_31.7 S5 ME5SA4**	**A603_31.7 S5 MX5SB4**	292	**A603_31.7 P160 BE160M4**	**A603_31.7 P160 BX160MB4**	293
48	2003	3.2	30.6	52600				**A803_30.6 P160 BE160M4**	**A803_30.6 P160 BX160MB4**	300
49	1972	2.3	30.1	49400				**A703_30.1 P160 BE160M4**	**A703_30.1 P160 BX160MB4**	297
49	1961	1.0	29.9	28200	**A553_29.9 S5 ME5SA4**	**A553_29.9 S5 MX5SB4**	288	**A553_29.9 P160 BE160M4**	**A553_29.9 P160 BX160MB4**	289
52	1849	3.6	28.2	51600			5	**A803_28.2 P160 BE160M4**	**A803_28.2 P160 BX160MB4**	300
53	1825	1.5	27.9	30000	**A603_27.9 S5 ME5SA4**	**A603_27.9 S5 MX5SB4**	292	**A603_27.9 P160 BE160M4**	**A603_27.9 P160 BX160MB4**	293
53	1820	2.3	27.8	48500				**A703_27.8 P160 BE160M4**	**A703_27.8 P160 BX160MB4**	297
57	1685	1.7	25.7	30000	**A603_25.7 S5 ME5SA4**	**A603_25.7 S5 MX5SB4**	292	**A603_25.7 P160 BE160M4**	**A603_25.7 P160 BX160MB4**	293
61	1576	1.0	24.0	7800	**A503_24.0 S5 ME5SA4**	**A503_24.0 S5 MX5SB4**	284	**A503_24.0 P160 BE160M4**	**A503_24.0 P160 BX160MB4**	285
62	1559	1.3	23.8	26000	**A553_23.8 S5 ME5SA4**	**A553_23.8 S5 MX5SB4**	288	**A553_23.8 P160 BE160M4**	**A553_23.8 P160 BX160MB4**	289
63	1541	2.8	23.5	46600				**A703_23.5 P160 BE160M4**	**A703_23.5 P160 BX160MB4**	297
69	1396	2.9	21.3	45500	**A703_21.3 S5 ME5SA4**	**A703_21.3 S5 MX5SB4**	296	**A703_21.3 P160 BE160M4**	**A703_21.3 P160 BX160MB4**	297
70	1416	0.8	20.9		**A502_20.9 S5 ME5SA4**	**A502_20.9 S5 MX5SB4**	284	**A502_20.9 P160 BE160M4**	**A502_20.9 P160 BX160MB4**	285
71	1394	1.4	20.6	30000	**A602_20.6 S5 ME5SA4**	**A602_20.6 S5 MX5SB4**	292	**A602_20.6 P160 BE160M4**	**A602_20.6 P160 BX160MB4**	293
75	1288	2.9	19.7	44500	**A703_19.7 S5 ME5SA4**	**A703_19.7 S5 MX5SB4**	296	**A703_19.7 P160 BE160M4**	**A703_19.7 P160 BX160MB4**	297
76	1302	1.4	19.2	27900	**A552_19.2 S5 ME5SA4**	**A552_19.2 S5 MX5SB4**	288	**A552_19.2 P160 BE160M4**	**A552_19.2 P160 BX160MB4**	289
88	1133	1.8	16.7	30000	**A602_16.7 S5 ME5SA4**	**A602_16.7 S5 MX5SB4**	292	**A602_16.7 P160 BE160M4**	**A602_16.7 P160 BX160MB4**	293
89	1121	1.1	16.6	12000	**A502_16.6 S5 ME5SA4**	**A502_16.6 S5 MX5SB4**	284	**A502_16.6 P160 BE160M4**	**A502_16.6 P160 BX160MB4**	285
94	1061	1.7	15.7	26600	**A552_15.7 S5 ME5SA4**	**A552_15.7 S5 MX5SB4**	288	**A552_15.7 P160 BE160M4**	**A552_15.7 P160 BX160MB4**	289
112	887	1.2	13.1	11500	**A502_13.1 S5 ME5SA4**	**A502_13.1 S5 MX5SB4**	284	**A502_13.1 P160 BE160M4**	**A502_13.1 P160 BX160MB4**	285
112	885	2.0	13.1	25400	**A552_13.1 S5 ME5SA4**	**A552_13.1 S5 MX5SB4**	288	**A552_13.1 P160 BE160M4**	**A552_13.1 P160 BX160MB4**	289
116	860	2.3	12.7	30000	**A602_12.7 S5 ME5SA4**	**A602_12.7 S5 MX5SB4**	292	**A602_12.7 P160 BE160M4**	**A602_12.7 P160 BX160MB4**	293
124	773	2.1	23.8	23600	**A553_23.8 S5 ME5SA2**		288	**A553_23.8 P160 BE160MA2**		289
142	701	2.6	10.4	24000	**A552_10.4 S5 ME5SA4**	**A552_10.4 S5 MX5SB4**	288	**A552_10.4 P160 BE160M4**	**A552_10.4 P160 BX160MB4**	289
143	698	2.9	10.3	30000	**A602_10.3 S5 ME5SA4**	**A602_10.3 S5 MX5SB4**	292	**A602_10.3 P160 BE160M4**	**A602_10.3 P160 BX160MB4**	293
151	659	1.5	9.7	10800	**A502_9.7 S5 ME5SA4**	**A502_9.7 S5 MX5SB4**	284	**A502_9.7 P160 BE160M4**	**A502_9.7 P160 BX160MB4**	285
174	573	3.1	8.5	22800	**A552_8.5 S5 ME5SA4**	**A552_8.5 S5 MX5SB4**	288	**A552_8.5 P160 BE160M4**	**A552_8.5 P160 BX160MB4**	289
190	524	1.8	7.7	10300	**A502_7.7 S5 ME5SA4**	**A502_7.7 S5 MX5SB4,**	284	**A502_7.7 P160 BE160M4**	**A502_7.7 P160 BX160MB4**	285
224	440	2.0	13.1	9920	**A502_13.1 S5 ME5SA2**		284	**A502_13.1 P160 BE160MA2**		285
380	260	2.8	7.7	8650	**A502_7.7 S5 ME5SA2**		284	**A502_7.7 P160 BE160MA2**		285

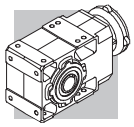

15 kW

n_2	M_2	S	i	R_{n2}	IE2	IE3		IEC IE2	IEC IE3	
min-1	Nm			N						
8.2	15697	0.9	180.0	75000	**A904_180.0 S5 ME5LA4**	**A904_180.0 S5 MX5LA4**	302	**A904_180.0 P160 BE160L4**	**A904_180.0 P160 BX160L4**	303
8.8	14490	1.0	166.1	75000	**A904_166.1 S5 ME5LA4**	**A904_166.1 S5 MX5LA4**	302	**A904_166.1 P160 BE160L4**	**A904_166.1 P160 BX160L4**	303
9.7	13467	1.0	151.0	75000	**A903_151.0 S5 ME5LA4**	**A903_151.0 S5 MX5LA4**	302	**A903_151.0 P160 BE160L4**	**A903_151.0 P160 BX160L4**	303
10.5	12431	1.0	139.4	75000	**A903_139.4 S5 ME5LA4**	**A903_139.4 S5 MX5LA4**	302	**A903_139.4 P160 BE160L4**	**A903_139.4 P160 BX160L4**	303
11.6	11294	1.2	126.6	75000	**A903_126.6 S5 ME5LA4**	**A903_126.6 S5 MX5LA4**	302	**A903_126.6 P160 BE160L4**	**A903_126.6 P160 BX160L4**	303
12.6	10426	1.3	116.9	75000	**A903_116.9 S5 ME5LA4**	**A903_116.9 S5 MX5LA4**	302	**A903_116.9 P160 BE160L4**	**A903_116.9 P160 BX160L4**	303
13.8	9526	1.5	106.8	75000	**A903_106.8 S5 ME5LA4**	**A903_106.8 S5 MX5LA4**	302	**A903_106.8 P160 BE160L4**	**A903_106.8 P160 BX160L4**	303
14.9	8793	1.6	98.6	75000	**A903_98.6 S5 ME5LA4**	**A903_98.6 S5 MX5LA4**	302	**A903_98.6 P160 BE160L4**	**A903_98.6 P160 BX160L4**	303
15.3	8564	0.9	96.0	60600	**A803_96.0 S5 ME5LA4**	**A803_96.0 S5 MX5LA4**	299	**A803_96.0 P160 BE160L4**	**A803_96.0 P160 BX160L4**	300
16.5	7953	1.0	89.2	60400	**A803_89.2 S5 ME5LA4**	**A803_89.2 S5 MX5LA4**	299	**A803_89.2 P160 BE160L4**	**A803_89.2 P160 BX160L4**	300
16.9	7765	1.8	87.1	75000	**A903_87.1 S5 ME5LA4**	**A903_87.1 S5 MX5LA4**	302	**A903_87.1 P160 BE160L4**	**A903_87.1 P160 BX160L4**	303
17.9	7341	1.1	82.3	59800	**A803_82.3 S5 ME5LA4**	**A803_82.3 S5 MX5LA4**	299	**A803_82.3 P160 BE160L4**	**A803_82.3 P160 BX160L4**	300
18.3	7168	2.0	80.4	75000	**A903_80.4 S5 ME5LA4**	**A903_80.4 S5 MX5LA4**	302	**A903_80.4 P160 BE160L4**	**A903_80.4 P160 BX160L4**	303
19.7	6642	2.1	74.5	75000	**A903_74.5 S5 ME5LA4**	**A903_74.5 S5 MX5LA4**	302	**A903_74.5 P160 BE160L4**	**A903_74.5 P160 BX160L4**	303
20.3	6454	1.2	72.4	59100	**A803_72.4 S5 ME5LA4**	**A803_72.4 S5 MX5LA4**	299	**A803_72.4 P160 BE160L4**	**A803_72.4 P160 BX160L4**	300
21.4	6131	2.3	68.8	75000	**A903_68.8 S5 ME5LA4**	**A903_68.8 S5 MX5LA4**	302	**A903_68.8 P160 BE160L4**	**A903_68.8 P160 BX160L4**	303
22.0	5957	1.3	66.8	58300	**A803_66.8 S5 ME5LA4**	**A803_66.8 S5 MX5LA4**	299	**A803_66.8 P160 BE160L4**	**A803_66.8 P160 BX160L4**	300
24.6	5331	1.5	59.8	57500	**A803_59.8 S5 ME5LA4**	**A803_59.8 S5 MX5LA4**	299	**A803_59.8 P160 BE160L4**	**A803_59.8 P160 BX160L4**	300
24.7	5317	2.6	59.6	75000	**A903_59.6 S5 ME5LA4**	**A903_59.6 S5 MX5LA4**	302	**A903_59.6 P160 BE160L4**	**A903_59.6 P160 BX160L4**	303
25.5	5143	1.0	57.7	50000	**A703_57.7 S5 ME5LA4**	**A703_57.7 S5 MX5LA4**	296	**A703_57.7 P160 BE160L4**	**A703_57.7 P160 BX160L4**	297
26.6	4921	1.6	55.2	56700	**A803_55.2 S5 ME5LA4**	**A803_55.2 S5 MX5LA4**	299	**A803_55.2 P160 BE160L4**	**A803_55.2 P160 BX160L4**	300
26.7	4908	2.9	55.0	75000	**A903_55.0 S5 ME5LA4**	**A903_55.0 S5 MX5LA4**	302	**A903_55.0 P160 BE160L4**	**A903_55.0 P160 BX160L4**	303
27.6	4747	1.1	53.2	50000	**A703_53.2 S5 ME5LA4**	**A703_53.2 S5 MX5LA4**	296	**A703_53.2 P160 BE160L4**	**A703_53.2 P160 BX160L4**	297
30	4370	1.1	49.0	50000	**A703_49.0 S5 ME5LA4**	**A703_49.0 S5 MX5LA4**	296	**A703_49.0 P160 BE160L4**	**A703_49.0 P160 BX160L4**	297
30	4307	3.3	48.3	74900				**A903_48.3 P160 BE160L4**	**A903_48.3 P160 BX160L4**	303
31	4297	1.9	48.2	55500	**A803_48.2 S5 ME5LA4**	**A803_48.2 S5 MX5LA4**	299	**A803_48.2 P160 BE160L4**	**A803_48.2 P160 BX160L4**	300
33	4034	1.2	45.2	50000	**A703_45.2 S5 ME5LA4**	**A703_45.2 S5 MX5LA4**	296	**A703_45.2 P160 BE160L4**	**A703_45.2 P160 BX160L4**	297
33	3976	3.5	44.6	73500				**A903_44.6 P160 BE160L4**	**A903_44.6 P160 BX160L4**	303
33	3966	1.9	44.5	54700	**A803_44.5 S5 ME5LA4**	**A803_44.5 S5 MX5LA4**	299	**A803_44.5 P160 BE160L4**	**A803_44.5 P160 BX160L4**	300
38	3433	2.2	38.5	53200				**A803_38.5 P160 BE160L4**	**A803_38.5 P160 BX160L4**	300
38	3423	1.4	38.4	49900	**A703_38.4 S5 ME5LA4**	**A703_38.4 S5 MX5LA4**	296	**A703_38.4 P160 BE160L4**	**A703_38.4 P160 BX160L4**	297
41	3169	2.2	35.5	52300				**A803_35.5 P160 BE160L4**	**A803_35.5 P160 BX160L4**	300
41	3160	1.4	35.4	49100	**A703_35.4 S5 ME5LA4**	**A703_35.4 S5 MX5LA4**	296	**A703_35.4 P160 BE160L4**	**A703_35.4 P160 BX160L4**	297
43	3059	0.9	34.3	30000	**A603_34.3 S5 ME5LA4**	**A603_34.3 S5 MX5LA4**	292	**A603_34.3 P160 BE160L4**	**A603_34.3 P160 BX160L4**	293
46	2824	1.0	31.7	30000	**A603_31.7 S5 ME5LA4**	**A603_31.7 S5 MX5LA4**	292	**A603_31.7 P160 BE160L4**	**A603_31.7 P160 BX160L4**	293
48	2727	2.4	30.6	50800				**A803_30.6 P160 BE160L4**	**A803_30.6 P160 BX160L4**	300
49	2684	1.7	30.1	47600				**A703_30.1 P160 BE160L4**	**A703_30.1 P160 BX160L4**	297
52	2517	2.6	28.2	49900				**A803_28.2 P160 BE160L4**	**A803_28.2 P160 BX160L4**	300
53	2484	1.1	27.9	30000	**A603_27.9 S5 ME5LA4**	**A603_27.9 S5 MX5LA4**	292	**A603_27.9 P160 BE160L4**	**A603_27.9 P160 BX160L4**	293
53	2478	1.7	27.8	46700				**A703_27.8 P160 BE160L4**	**A703_27.8 P160 BX160L4**	297
57	2293	1.2	25.7	30000	**A603_25.7 S5 ME5LA4**	**A603_25.7 S5 MX5LA4**	292	**A603_25.7 P160 BE160L4**	**A603_25.7 P160 BX160L4**	293
62	2122	0.9	23.8	22600	**A553_23.8 S5 ME5LA4**	**A553_23.8 S5 MX5LA4**	288	**A553_23.8 P160 BE160L4**	**A553_23.8 P160 BX160L4**	289
63	2098	2.1	23.5	45100				**A703_23.5 P160 BE160L4**	**A703_23.5 P160 BX160L4**	297
69	1900	2.1	21.3	44100	**A703_21.3 S5 ME5LA4**	**A703_21.3 S5 MX5LA4**	296	**A703_21.3 P160 BE160L4**	**A703_21.3 P160 BX160L4**	297
70	1868	3.5	20.9	46600	**A803_20.9 S5 ME5LA4**	**A803_20.9 S5 MX5LA4**	299	**A803_20.9 P160 BE160L4**	**A803_20.9 P160 BX160L4**	300
71	1897	1.1	20.6	30000	**A602_20.6 S5 ME5LA4**	**A602_20.6 S5 MX5LA4**	292	**A602_20.6 P160 BE160L4**	**A602_20.6 P160 BX160L4**	293
75	1754	2.1	19.7	43300	**A703_19.7 S5 ME5LA4**	**A703_19.7 S5 MX5LA4**	296	**A703_19.7 P160 BE160L4**	**A703_19.7 P160 BX160L4**	297
76	1725	3.5	19.3	45700	**A803_19.3 S5 ME5LA4**	**A803_19.3 S5 MX5LA4**	299	**A803_19.3 P160 BE160L4**	**A803_19.3 P160 BX160L4**	300
76	1772	1.0	19.2	26800	**A552_19.2 S5 ME5LA4**	**A552_19.2 S5 MX5LA4**	288	**A552_19.2 P160 BE160L4**	**A552_19.2 P160 BX160L4**	289
88	1542	1.3	16.7	30000	**A602_16.7 S5 ME5LA4**	**A602_16.7 S5 MX5LA4**	292	**A602_16.7 P160 BE160L4**	**A602_16.7 P160 BX160L4**	293
88	1488	2.7	16.7	41600	**A703_16.7 S5 ME5LA4**	**A703_16.7 S5 MX5LA4**	296	**A703_16.7 P160 BE160L4**	**A703_16.7 P160 BX160L4**	297
94	1444	1.2	15.7	25700	**A552_15.7 S5 ME5LA4**	**A552_15.7 S5 MX5LA4**	288	**A552_15.7 P160 BE160L4**	**A552_15.7 P160 BX160L4**	289
95	1374	2.7	15.4	40800	**A703_15.4 S5 ME5LA4**	**A703_15.4 S5 MX5LA4**	296	**A703_15.4 P160 BE160L4**	**A703_15.4 P160 BX160L4**	297
112	1207	0.9	13.1	10500	**A502_13.1 S5 ME5LA4**	**A502_13.1 S5 MX5LA4**	284	**A502_13.1 P160 BE160L4**	**A502_13.1 P160 BX160L4**	285
112	1167	3.3	13.1	39200				**A703_13.1 P160 BE160L4**	**A703_13.1 P160 BX160L4**	297
112	1205	1.5	13.1	24700	**A552_13.1 S5 ME5LA4**	**A552_13.1 S5 MX5LA4**	288	**A552_13.1 P160 BE160L4**	**A552_13.1 P160 BX160L4**	289
116	1170	1.7	12.7	30000	**A602_12.7 S5 ME5LA4**	**A602_12.7 S5 MX5LA4**	292	**A602_12.7 P160 BE160L4**	**A602_12.7 P160 BX160L4**	293
122	1077	3.3	12.1	38400				**A703_12.1 P160 BE160L4**	**A703_12.1 P160 BX160L4**	297
142	954	1.9	10.4	23400	**A552_10.4 S5 ME5LA4**	**A552_10.4 S5 MX5LA4**	288	**A552_10.4 P160 BE160L4**	**A552_10.4 P160 BX160L4**	289
143	950	2.1	10.3	30000	**A602_10.3 S5 ME5LA4**	**A602_10.3 S5 MX5LA4**	292	**A602_10.3 P160 BE160L4**	**A602_10.3 P160 BX160L4**	293
151	897	1.1	9.7	10100	**A502_9.7 S5 ME5LA4**	**A502_9.7 S5 MX5LA4**	284	**A502_9.7 P160 BE160L4**	**A502_9.7 P160 BX160L4**	285
174	779	2.3	8.5	22200	**A552_8.5 S5 ME5LA4**	**A552_8.5 S5 MX5LA4**	288	**A552_8.5 P160 BE160L4**	**A552_8.5 P160 BX160L4**	289
187	724	2.8	7.9	28300	**A602_7.9 S5 ME5LA4**	**A602_7.9 S5 MX5LA4**	292	**A602_7.9 P160 BE160L4**	**A602_7.9 P160 BX160L4**	293

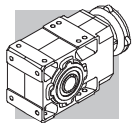

15 kW

n_2 min-1	M_2 Nm	S	i	R_{n2} N	IE2	IE3		IEC IE2	IEC IE3	
190	713	1.3	7.7	9750	**A502_7.7 S5 ME5LA4**	**A502_7.7 S5 MX5LA4**	284	**A502_7.7 P160 BE160L4**	**A502_7.7 P160 BX160L4**	285
229	591	2.9	6.4	20700	**A552_6.4 S5 ME5LA4**	**A552_6.4 S5 MX5LA4**	288	**A552_6.4 P160 BE160L4**	**A552_6.4 P160 BX160L4**	289
297	456	3.5	4.9	19400	**A552_4.9 S5 ME5LA4**	**A552_4.9 S5 MX5LA4**	288	**A552_4.9 P160 BE160L4**	**A552_4.9 P160 BX160L4**	289
302	446	1.8	9.7	8830	**A502_9.7 S5 ME5SB2**		284	**A502_9.7 P160 BE160MB2**		285
380	354	2.1	7.7	8350	**A502_7.7 S5 ME5SB2**		284	**A502_7.7 P160 BE160MB2**		285

18.5 kW

n_2 min-1	M_2 Nm	S	i	R_{n2} N	IE2	IE3		IEC IE2	IEC IE3	
11.6	13830	1.0	126.6	75000				**A903_126.6 P180 BE180M4**	**A903_126.6 P180 BX180M4**	303
12.6	12766	1.1	116.9	75000				**A903_116.9 P180 BE180M4**	**A903_116.9 P180 BX180M4**	303
13.8	11665	1.2	106.8	75000				**A903_106.8 P180 BE180M4**	**A903_106.8 P180 BX180M4**	303
14.9	10767	1.3	98.6	75000				**A903_98.6 P180 BE180M4**	**A903_98.6 P180 BX180M4**	303
16.9	9508	1.5	87.1	75000				**A903_87.1 P180 BE180M4**	**A903_87.1 P180 BX180M4**	303
18.3	8777	1.6	80.4	75000				**A903_80.4 P180 BE180M4**	**A903_80.4 P180 BX180M4**	303
19.7	8133	1.7	74.5	75000				**A903_74.5 P180 BE180M4**	**A903_74.5 P180 BX180M4**	303
20.3	7903	1.0	72.4	55600				**A803_72.4 P180 BE180M4**	**A803_72.4 P180 BX180M4**	300
21.4	7508	1.9	68.8	75000				**A903_68.8 P180 BE180M4**	**A903_68.8 P180 BX180M4**	303
22.0	7295	1.1	66.8	55100				**A803_66.8 P180 BE180M4**	**A803_66.8 P180 BX180M4**	300
24.6	6528	1.2	59.8	54700				**A803_59.8 P180 BE180M4**	**A803_59.8 P180 BX180M4**	300
24.7	6510	2.2	59.6	75000				**A903_59.6 P180 BE180M4**	**A903_59.6 P180 BX180M4**	303
26.6	6026	1.3	55.2	54100				**A803_55.2 P180 BE180M4**	**A803_55.2 P180 BX180M4**	300
26.7	6009	2.3	55.0	74900				**A903_55.0 P180 BE180M4**	**A903_55.0 P180 BX180M4**	303
30	5351	0.9	49.0	49600				**A703_49.0 P180 BE180M4**	**A703_49.0 P180 BX180M4**	297
30	5274	2.7	48.3	73100				**A903_48.3 P180 BE180M4**	**A903_48.3 P180 BX180M4**	303
31	5262	1.5	48.2	53200				**A803_48.2 P180 BE180M4**	**A803_48.2 P180 BX180M4**	300
33	4939	1.0	45.2	49000				**A703_45.2 P180 BE180M4**	**A703_45.2 P180 BX180M4**	297
33	4869	2.9	44.6	71800				**A903_44.6 P180 BE180M4**	**A903_44.6 P180 BX180M4**	303
33	4857	1.5	44.5	52500				**A803_44.5 P180 BE180M4**	**A803_44.5 P180 BX180M4**	300
38	4238	3.3	38.8	69700				**A903_38.8 P180 BE180M4**	**A903_38.8 P180 BX180M4**	303
38	4204	1.8	38.5	51400				**A803_38.5 P180 BE180M4**	**A803_38.5 P180 BX180M4**	300
38	4191	1.2	38.4	48000				**A703_38.4 P180 BE180M4**	**A703_38.4 P180 BX180M4**	297
41	3912	3.5	35.8	68500				**A903_35.8 P180 BE180M4**	**A903_35.8 P180 BX180M4**	303
41	3881	1.8	35.5	50600				**A803_35.5 P180 BE180M4**	**A803_35.5 P180 BX180M4**	300
41	3869	1.2	35.4	47300				**A703_35.4 P180 BE180M4**	**A703_35.4 P180 BX180M4**	297
48	3339	1.9	30.6	49300				**A803_30.6 P180 BE180M4**	**A803_30.6 P180 BX180M4**	300
49	3287	1.4	30.1	46100				**A703_30.1 P180 BE180M4**	**A703_30.1 P180 BX180M4**	297
52	3082	2.1	28.2	48500				**A803_28.2 P180 BE180M4**	**A803_28.2 P180 BX180M4**	300
53	3042	0.9	27.9	30000				**A603_27.9 P180 BE180M4**	**A603_27.9 P180 BX180M4**	293
53	3034	1.4	27.8	45300				**A703_27.8 P180 BE180M4**	**A703_27.8 P180 BX180M4**	297
57	2808	1.0	25.7	30000				**A603_25.7 P180 BE180M4**	**A603_25.7 P180 BX180M4**	293
60	2675	2.5	24.5	47200				**A803_24.5 P180 BE180M4**	**A803_24.5 P180 BX180M4**	300
63	2568	1.7	23.5	43900				**A703_23.5 P180 BE180M4**	**A703_23.5 P180 BX180M4**	297
65	2470	2.5	22.6	46300				**A803_22.6 P180 BE180M4**	**A803_22.6 P180 BX180M4**	300
69	2326	1.7	21.3	43000				**A703_21.3 P180 BE180M4**	**A703_21.3 P180 BX180M4**	297
70	2288	2.9	20.9	45600				**A803_20.9 P180 BE180M4**	**A803_20.9 P180 BX180M4**	300
71	2323	0.9	20.6	30000				**A602_20.6 P180 BE180M4**	**A602_20.6 P180 BX180M4**	293
75	2147	1.7	19.7	42300				**A703_19.7 P180 BE180M4**	**A703_19.7 P180 BX180M4**	297
76	2112	2.9	19.3	44800				**A803_19.3 P180 BE180M4**	**A803_19.3 P180 BX180M4**	300
88	1888	1.1	16.7	30000				**A602_16.7 P180 BE180M4**	**A602_16.7 P180 BX180M4**	293
88	1822	2.2	16.7	40800				**A703_16.7 P180 BE180M4**	**A703_16.7 P180 BX180M4**	297
94	1769	1.0	15.7	25000				**A552_15.7 P180 BE180M4**	**A552_15.7 P180 BX180M4**	289
95	1682	2.2	15.4	40100				**A703_15.4 P180 BE180M4**	**A703_15.4 P180 BX180M4**	297

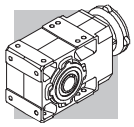

18.5 kW

n_2 min-1	M_2 Nm	S	i	R_{n2} N	IE2	IE3		IEC IE2	IEC IE3	
112	1429	2.7	13.1	38600				**A703_13.1 P180 BE180M4**	**A703_13.1 P180 BX180M4**	297
112	1475	1.2	13.1	24100				**A552_13.1 P180 BE180M4**	**A552_13.1 P180 BX180M4**	289
116	1433	1.4	12.7	30000				**A602_12.7 P180 BE180M4**	**A602_12.7 P180 BX180M4**	293
122	1319	2.7	12.1	37800				**A703_12.1 P180 BE180M4**	**A703_12.1 P180 BX180M4**	297
124	1299	1.2	23.8	21600	**A553_23.8 S5 ME5LA2**		288	**A553_23.8 P160 BE160L2**		289
142	1168	1.5	10.4	22900				**A552_10.4 P180 BE180M4**	**A552_10.4 P180 BX180M4**	289
143	1164	1.7	10.3	29900				**A602_10.3 P180 BE180M4**	**A602_10.3 P180 BX180M4**	293
144	1117	2.9	10.2	36300				**A703_10.2 P180 BE180M4**	**A703_10.2 P180 BX180M4**	297
151	1098	0.9	9.7	9530				**A502_9.7 P180 BE180M4**	**A502_9.7 P180 BX180M4**	285
156	1031	2.9	9.4	35600				**A703_9.4 P180 BE180M4**	**A703_9.4 P180 BX180M4**	297
174	954	1.9	8.5	21900				**A552_8.5 P180 BE180M4**	**A552_8.5 P180 BX180M4**	289
187	887	2.3	7.9	27900				**A602_7.9 P180 BE180M4**	**A602_7.9 P180 BX180M4**	293
190	873	1.1	7.7	9260				**A502_7.7 P180 BE180M4**	**A502_7.7 P180 BX180M4**	285
229	723	2.4	6.4	20400				**A552_6.4 P180 BE180M4**	**A552_6.4 P180 BX180M4**	289
297	558	2.9	4.9	19100				**A552_4.9 P180 BE180M4**	**A552_4.9 P180 BX180M4**	289
381	436	1.7	7.7	8100	**A502_7.7 S5 ME5LA2**		284	**A502_7.7 P160 BE160L2**		285

22 kW

n_2 min-1	M_2 Nm	S	i	R_{n2} N	IE2	IE3		IEC IE2	IEC IE3	
12.6	15213	0.9	116.9	75000				**A903_116.9 P180 BE180L4**	**A903_116.9 P180 BX180L4**	303
13.8	13900	1.0	106.8	75000				**A903_106.8 P180 BE180L4**	**A903_106.8 P180 BX180L4**	303
14.9	12831	1.1	98.6	75000				**A903_98.6 P180 BE180L4**	**A903_98.6 P180 BX180L4**	303
16.9	11330	1.2	87.1	75000				**A903_87.1 P180 BE180L4**	**A903_87.1 P180 BX180L4**	303
18.3	10459	1.3	80.4	75000				**A903_80.4 P180 BE180L4**	**A903_80.4 P180 BX180L4**	303
19.7	9692	1.4	74.5	75000				**A903_74.5 P180 BE180L4**	**A903_74.5 P180 BX180L4**	303
21.4	8947	1.6	68.8	75000				**A903_68.8 P180 BE180L4**	**A903_68.8 P180 BX180L4**	303
22.0	8693	0.9	66.8	51900				**A803_66.8 P180 BE180L4**	**A803_66.8 P180 BX180L4**	300
24.6	7779	1.0	59.8	51800				**A803_59.8 P180 BE180L4**	**A803_59.8 P180 BX180L4**	300
24.7	7758	1.8	59.6	73800				**A903_59.6 P180 BE180L4**	**A903_59.6 P180 BX180L4**	303
26.6	7181	1.1	55.2	51400				**A803_55.2 P180 BE180L4**	**A803_55.2 P180 BX180L4**	300
26.7	7161	2.0	55.0	72700				**A903_55.0 P180 BE180L4**	**A903_55.0 P180 BX180L4**	303
30	6285	2.2	48.3	71100				**A903_48.3 P180 BE180L4**	**A903_48.3 P180 BX180L4**	303
31	6270	1.3	48.2	50900				**A803_48.2 P180 BE180L4**	**A803_48.2 P180 BX180L4**	300
33	5802	2.4	44.6	70000				**A903_44.6 P180 BE180L4**	**A903_44.6 P180 BX180L4**	303
33	5788	1.3	44.5	50300				**A803_44.5 P180 BE180L4**	**A803_44.5 P180 BX180L4**	300
38	5050	2.8	38.8	68100				**A903_38.8 P180 BE180L4**	**A903_38.8 P180 BX180L4**	303
38	5010	1.5	38.5	49500				**A803_38.5 P180 BE180L4**	**A803_38.5 P180 BX180L4**	300
38	4995	1.0	38.4	46000				**A703_38.4 P180 BE180L4**	**A703_38.4 P180 BX180L4**	297
41	4662	2.9	35.8	67000				**A903_35.8 P180 BE180L4**	**A903_35.8 P180 BX180L4**	303
41	4625	1.5	35.5	48900				**A803_35.5 P180 BE180L4**	**A803_35.5 P180 BX180L4**	300
41	4611	1.0	35.4	45500				**A703_35.4 P180 BE180L4**	**A703_35.4 P180 BX180L4**	297
47	4099	3.4	31.5	65200				**A903_31.5 P180 BE180L4**	**A903_31.5 P180 BX180L4**	303
48	3979	1.6	30.6	47800				**A803_30.6 P180 BE180L4**	**A803_30.6 P180 BX180L4**	300
49	3917	1.2	30.1	44500				**A703_30.1 P180 BE180L4**	**A703_30.1 P180 BX180L4**	297
51	3784	3.4	29.1	64000				**A903_29.1 P180 BE180L4**	**A903_29.1 P180 BX180L4**	303
52	3673	1.8	28.2	47100				**A803_28.2 P180 BE180L4**	**A803_28.2 P180 BX180L4**	300
53	3616	1.2	27.8	43900				**A703_27.8 P180 BE180L4**	**A703_27.8 P180 BX180L4**	297
60	3188	2.1	24.5	45900				**A803_24.5 P180 BE180L4**	**A803_24.5 P180 BX180L4**	300
63	3061	1.4	23.5	42700				**A703_23.5 P180 BE180L4**	**A703_23.5 P180 BX180L4**	297
65	2943	2.1	22.6	45200				**A803_22.6 P180 BE180L4**	**A803_22.6 P180 BX180L4**	300

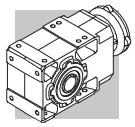

22 kW

n_2 min-1	M_2 Nm	S	i	R_{n2} N	IE2	IE3		IEC IE2	IEC IE3	
69	2772	1.4	21.3	41900				**A703_21.3 P180 BE180L4**	**A703_21.3 P180 BX180L4**	297
70	2726	2.4	20.9	44600				**A803_20.9 P180 BE180L4**	**A803_20.9 P180 BX180L4**	300
75	2559	1.4	19.7	41200				**A703_19.7 P180 BE180L4**	**A703_19.7 P180 BX180L4**	297
76	2516	2.4	19.3	43800				**A803_19.3 P180 BE180L4**	**A803_19.3 P180 BX180L4**	300
88	2178	3.0	16.7	42500				**A803_16.7 P180 BE180L4**	**A803_16.7 P180 BX180L4**	300
88	2250	0.9	16.7	30000				**A602_16.7 P180 BE180L4**	**A602_16.7 P180 BX180L4**	293
88	2172	1.8	16.7	39900				**A703_16.7 P180 BE180L4**	**A703_16.7 P180 BX180L4**	297
95	2011	3.0	15.5	41700				**A803_15.5 P180 BE180L4**	**A803_15.5 P180 BX180L4**	300
95	2005	1.8	15.4	39200				**A703_15.4 P180 BE180L4**	**A703_15.4 P180 BX180L4**	297
112	1703	2.3	13.1	37900				**A703_13.1 P180 BE180L4**	**A703_13.1 P180 BX180L4**	297
112	1758	1.0	13.1	23500				**A552_13.1 P180 BE180L4**	**A552_13.1 P180 BX180L4**	289
116	1708	1.2	12.7	30000				**A602_12.7 P180 BE180L4**	**A602_12.7 P180 BX180L4**	293
122	1572	2.3	12.1	37200				**A703_12.1 P180 BE180L4**	**A703_12.1 P180 BX180L4**	297
142	1392	1.3	10.4	22400				**A552_10.4 P180 BE180L4**	**A552_10.4 P180 BX180L4**	289
143	1387	1.4	10.3	29300				**A602_10.3 P180 BE180L4**	**A602_10.3 P180 BX180L4**	293
144	1331	2.4	10.2	35800				**A703_10.2 P180 BE180L4**	**A703_10.2 P180 BX180L4**	297
156	1228	2.4	9.4	35100				**A703_9.4 P180 BE180L4**	**A703_9.4 P180 BX180L4**	297
174	1137	1.6	8.5	21400				**A552_8.5 P180 BE180L4**	**A552_8.5 P180 BX180L4**	289
187	1057	1.9	7.9	27500				**A602_7.9 P180 BE180L4**	**A602_7.9 P180 BX180L4**	293
190	1040	0.9	7.7	8760				**A502_7.7 P180 BE180L4**	**A502_7.7 P180 BX180L4**	285
229	862	2.0	6.4	20100				**A552_6.4 P180 BE180L4**	**A552_6.4 P180 BX180L4**	289
297	665	2.4	4.9	18900				**A552_4.9 P180 BE180L4**	**A552_4.9 P180 BX180L4**	289

30 kW

n_2 min-1	M_2 Nm	S	i	R_{n2} N	IE...		IEC IE2*	IEC IE3	
16.8	15556	0.9	87.1	70100			**A903_87.1 P200 IEC200L4**	**A903_87.1 P200 BX200LA4**	303
18.2	14360	1.0	80.4	70000			**A903_80.4 P200 IEC200L4**	**A903_80.4 P200 BX200LA4**	303
19.6	13307	1.1	74.5	69700			**A903_74.5 P200 IEC200L4**	**A903_74.5 P200 BX200LA4**	303
21.2	12283	1.1	68.8	69200			**A903_68.8 P200 IEC200L4**	**A903_68.8 P200 BX200LA4**	303
24.5	10651	1.3	59.6	68500			**A903_59.6 P200 IEC200L4**	**A903_59.6 P200 BX200LA4**	303
26.5	9832	1.4	55.0	67800			**A903_55.0 P200 IEC200L4**	**A903_55.0 P200 BX200LA4**	303
30.0	8630	1.6	48.3	66900			**A903_48.3 P200 IEC200L4**	**A903_48.3 P200 BX200LA4**	303
30	8609	0.9	48.2	45700			**A803_48.2 P200 IEC200L4**	**A803_48.2 P200 BX200LA4**	300
33	7966	1.8	44.6	66000			**A903_44.6 P200 IEC200L4**	**A903_44.6 P200 BX200LA4**	303
33	7946	0.9	44.5	45500			**A803_44.5 P200 IEC200L4**	**A803_44.5 P200 BX200LA4**	300
38	6934	2.0	38.8	64700			**A903_38.8 P200 IEC200L4**	**A903_38.8 P200 BX200LA4**	303
38	6879	1.1	38.5	45300			**A803_38.5 P200 IEC200L4**	**A803_38.5 P200 BX200LA4**	300
41	6400	2.1	35.8	63800			**A903_35.8 P200 IEC200L4**	**A903_35.8 P200 BX200LA4**	303
41	6349	1.1	35.5	45000			**A803_35.5 P200 IEC200L4**	**A803_35.5 P200 BX200LA4**	300
46	5628	2.5	31.5	62400			**A903_31.5 P200 IEC200L4**	**A903_31.5 P200 BX200LA4**	303
48	5463	1.2	30.6	44500			**A803_30.6 P200 IEC200L4**	**A803_30.6 P200 BX200LA4**	300
50	5195	2.5	29.1	61400			**A903_29.1 P200 IEC200L4**	**A903_29.1 P200 BX200LA4**	303
52	5043	1.3	28.2	44000			**A803_28.2 P200 IEC200L4**	**A803_28.2 P200 BX200LA4**	300
60	4377	1.5	24.5	43300			**A803_24.5 P200 IEC200L4**	**A803_24.5 P200 BX200LA4**	300
61	4307	3.1	24.1	59200			**A903_24.1 P200 IEC200L4**	**A903_24.1 P200 BX200LA4**	303
62	4202	1.0	23.5	40100			**A703_23.5 P200 IEC200L4**	**A703_23.5 P200 BX200LA4**	297
65	4041	1.5	22.6	42700			**A803_22.6 P200 IEC200L4**	**A803_22.6 P200 BX200LA4**	300
66	3976	3.1	22.3	58200			**A903_22.3 P200 IEC200L4**	**A903_22.3 P200 BX200LA4**	303
70	3752	3.3	21.0	57500			**A903_21.0 P200 IEC200L4**	**A903_21.0 P200 BX200LA4**	303
70	3743	1.7	20.9	42300			**A803_20.9 P200 IEC200L4**	**A803_20.9 P200 BX200LA4**	300

***电机额定功率大于22KW时，技术资料仅供参考，选型时必参考电机制造商提供的信息。**

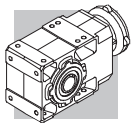

30 kW

n_2 min-1	M_2 Nm	S	i	R_{n2} N	IE...		IE2*	IEC IE3	
75	3463	3.3	19.4	56500			**A903_19.4 P200 IEC200L4**	**A903_19.4 P200 BX200LA4**	303
75	3455	1.8	19.3	41700			**A803_19.3 P200 IEC200L4**	**A803_19.3 P200 BX200LA4**	300
87	2991	2.2	16.7	40700			**A803_16.7 P200 IEC200L4**	**A803_16.7 P200 BX200LA4**	300
87	2982	1.3	16.7	38100			**A703_16.7 P200 IEC200L4**	**A703_16.7 P200 BX200LA4**	297
94	2761	2.2	15.5	40000			**A803_15.5 P200 IEC200L4**	**A803_15.5 P200 BX200LA4**	300
95	2752	1.3	15.4	37500			**A703_15.4 P200 IEC200L4**	**A703_15.4 P200 BX200LA4**	297
110	2375	2.8	13.3	38900			**A803_13.3 P200 IEC200L4**	**A803_13.3 P200 BX200LA4**	300
112	2338	1.6	13.1	36400			**A703_13.1 P200 IEC200L4**	**A703_13.1 P200 BX200LA4**	297
119	2192	2.8	12.3	38200			**A803_12.3 P200 IEC200L4**	**A803_12.3 P200 BX200LA4**	300
121	2158	1.6	12.1	35800			**A703_12.1 P200 IEC200L4**	**A703_12.1 P200 BX200LA4**	297
125	2094	1.7	23.5	35600			**A703_23.5 P200 IEC200LA2**	**A703_23.5 P200 IEC200LA2**	297
137	1903	3.4	10.7	37100			**A803_10.7 P200 IEC200L4**	**A803_10.7 P200 BX200LA4**	300
143	1827	1.8	10.2	34600			**A703_10.2 P200 IEC200L4**	**A703_10.2 P200 BX200LA4**	297
148	1757	3.4	9.8	36500			**A803_9.8 P200 IEC200L4**	**A803_9.8 P200 BX200LA4**	300
155	1687	1.8	9.4	34000			**A703_9.4 P200 IEC200L4**	**A703_9.4 P200 BX200LA4**	297
176	1486	2.3	16.7	33100			**A703_16.7 P200 IEC200LA2**	**A703_16.7 P200 IEC200LA2**	297
190	1371	2.3	15.4	32500			**A703_15.4 P200 IEC200LA2**	**A703_15.4 P200 IEC200LA2**	297
224	1165	2.7	13.1	31300			**A703_13.1 P200 IEC200LA2**	**A703_13.1 P200 IEC200LA2**	297
243	1075	2.7	12.1	30600			**A703_12.1 P200 IEC200LA2**	**A703_12.1 P200 IEC200LA2**	297
287	910	3.2	10.2	29400			**A703_10.2 P200 IEC200LA2**	**A703_10.2 P200 IEC200LA2**	297
310	840	3.2	9.4	28800			**A703_9.4 P200 IEC200LA2**	**A703_9.4 P200 IEC200LA2**	297

37 kW

n_2 min-1	M_2 Nm	S	i	R_{n2} N	IE...		IE2*	IEC IE3	
21.5	14945	0.9	68.8	63900			**A903_68.8 P225 IEC225S4**	**A903_68.8 P225 BX225SA4**	303
24.8	12959	1.1	59.6	63900			**A903_59.6 P225 IEC225S4**	**A903_59.6 P225 BX225SA4**	303
26.9	11962	1.2	55.0	63600			**A903_55.0 P225 IEC225S4**	**A903_55.0 P225 BX225SA4**	303
31	10499	1.3	48.3	63100			**A903_48.3 P225 IEC225S4**	**A903_48.3 P225 BX225SA4**	303
33	9692	1.4	44.6	62500			**A903_44.6 P225 IEC225S4**	**A903_44.6 P225 BX225SA4**	303
38	8436	1.7	38.8	61700			**A903_38.8 P225 IEC225S4**	**A903_38.8 P225 BX225SA4**	303
38	8369	0.9	38.5	41700			**A803_38.5 P225 IEC225S4**	**A803_38.5 P225 BX225SA4**	300
41	7787	1.8	35.8	61000			**A903_35.8 P225 IEC225S4**	**A903_35.8 P225 BX225SA4**	303
42	7725	0.9	35.5	41600			**A803_35.5 P225 IEC225S4**	**A803_35.5 P225 BX225SA4**	300
47	6847	2.0	31.5	59900			**A903_31.5 P225 IEC225S4**	**A903_31.5 P225 BX225SA4**	303
48	6647	1.0	30.6	41600			**A803_30.6 P225 IEC225S4**	**A803_30.6 P225 BX225SA4**	300
51	6321	2.1	29.1	59100			**A903_29.1 P225 IEC225S4**	**A903_29.1 P225 BX225SA4**	303
52	6135	1.1	28.2	41300			**A803_28.2 P225 IEC225S4**	**A803_28.2 P225 BX225SA4**	300
60	5326	1.3	24.5	40900			**A803_24.5 P225 IEC225S4**	**A803_24.5 P225 BX225SA4**	300
61	5241	2.5	24.1	57300			**A903_24.1 P225 IEC225S4**	**A903_24.1 P225 BX225SA4**	303
65	4916	1.3	22.6	40500			**A803_22.6 P225 IEC225S4**	**A803_22.6 P225 BX225SA4**	300
67	4837	2.5	22.3	56400			**A903_22.3 P225 IEC225S4**	**A903_22.3 P225 BX225SA4**	303
70	4565	2.7	21.0	55900			**A903_21.0 P225 IEC225S4**	**A903_21.0 P225 BX225SA4**	303
71	4554	1.4	20.9	40300			**A803_20.9 P225 IEC225S4**	**A803_20.9 P225 BX225SA4**	300
76	4214	2.7	19.4	54900			**A903_19.4 P225 IEC225S4**	**A903_19.4 P225 BX225SA4**	303
77	4204	1.4	19.3	39800			**A803_19.3 P225 IEC225S4**	**A803_19.3 P225 BX225SA4**	300
88	3668	3.2	16.9	53400			**A903_16.9 P225 IEC225S4**	**A903_16.9 P225 BX225SA4**	303
88	3639	1.8	16.7	39100			**A803_16.7 P225 IEC225S4**	**A803_16.7 P225 BX225SA4**	300
95	3386	3.2	15.6	52500			**A903_15.6 P225 IEC225S4**	**A903_15.6 P225 BX225SA4**	303
96	3359	1.8	15.5	38500			**A803_15.5 P225 IEC225S4**	**A803_15.5 P225 BX225SA4**	300
111	2890	2.3	13.3	37600			**A803_13.3 P225 IEC225S4**	**A803_13.3 P225 BX225SA4**	300
121	2667	2.3	12.3	37000			**A803_12.3 P225 IEC225S4**	**A803_12.3 P225 BX225SA4**	300
139	2316	2.8	10.7	36100			**A803_10.7 P225 IEC225S4**	**A803_10.7 P225 BX225SA4**	300
151	2137	2.8	9.8	35500			**A803_9.8 P225 IEC225S4**	**A803_9.8 P225 BX225SA4**	300

***电机额定功率大于22KW时，技术资料仅供参考，选型时必参考电机制造商提供的信息。**

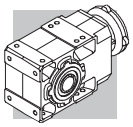

45 kW

n_2 min-1	M_2 Nm	S	i	R_{n2} N	IE...		IEC IE2*	IEC IE3	
26.9	14549	1.0	55.0	58700			**A903_55.0 P225 IEC225M4**	**A903_55.0 P225 BX225SB4**	303
31	12769	1.1	48.3	58900			**A903_48.3 P225 IEC225M4**	**A903_48.3 P225 BX225SB4**	303
33	11787	1.2	44.6	58600			**A903_44.6 P225 IEC225M4**	**A903_44.6 P225 BX225SB4**	303
38	10260	1.4	38.8	58300			**A903_38.8 P225 IEC225M4**	**A903_38.8 P225 BX225SB4**	303
41	9471	1.5	35.8	57800			**A903_35.8 P225 IEC225M4**	**A903_35.8 P225 BX225SB4**	303
47	8328	1.7	31.5	57200			**A903_31.5 P225 IEC225M4**	**A903_31.5 P225 BX225SB4**	303
51	7687	1.7	29.1	56600			**A903_29.1 P225 IEC225M4**	**A903_29.1 P225 BX225SB4**	303
60	6477	1.0	24.5	38300			**A803_24.5 P225 IEC225M4**	**A803_24.5 P225 BX225SB4**	300
61	6374	2.1	24.1	55200			**A903_24.1 P225 IEC225M4**	**A903_24.1 P225 BX225SB4**	303
65	5979	1.0	22.6	38100			**A803_22.6 P225 IEC225M4**	**A803_22.6 P225 BX225SB4**	300
67	5883	2.1	22.3	54500			**A903_22.3 P225 IEC225M4**	**A903_22.3 P225 BX225SB4**	303
70	5552	2.2	21.0	54000			**A903_21.0 P225 IEC225M4**	**A903_21.0 P225 BX225SB4**	303
71	5539	1.2	20.9	38000			**A803_20.9 P225 IEC225M4**	**A803_20.9 P225 BX225SB4**	300
76	5125	2.3	19.4	53200			**A903_19.4 P225 IEC225M4**	**A903_19.4 P225 BX225SB4**	303
77	5112	1.2	19.3	37700			**A803_19.3 P225 IEC225M4**	**A803_19.3 P225 BX225SB4**	300
88	4461	2.7	16.9	52000			**A903_16.9 P225 IEC225M4**	**A903_16.9 P225 BX225SB4**	303
88	4425	1.5	16.7	37300			**A803_16.7 P225 IEC225M4**	**A803_16.7 P225 BX225SB4**	300
95	4118	2.7	15.6	51100			**A903_15.6 P225 IEC225M4**	**A903_15.6 P225 BX225SB4**	303
96	4085	1.5	15.5	36900			**A803_15.5 P225 IEC225M4**	**A803_15.5 P225 BX225SB4**	300
108	3621	3.1	13.7	49900			**A903_13.7 P225 IEC225M4**	**A903_13.7 P225 BX225SB4**	303
111	3515	1.9	13.3	36200			**A803_13.3 P225 IEC225M4**	**A803_13.3 P225 BX225SB4**	300
117	3342	3.1	12.6	49000			**A903_12.6 P225 IEC225M4**	**A903_12.6 P225 BX225SB4**	303
121	3244	1.9	12.3	35700			**A803_12.3 P225 IEC225M4**	**A803_12.3 P225 BX225SB4**	300
139	2816	2.3	10.7	34900			**A803_10.7 P225 IEC225M4**	**A803_10.7 P225 BX225SB4**	300
141	2771	3.5	10.5	47100			**A903_10.5 P225 IEC225M4**	**A903_10.5 P225 BX225SB4**	303
151	2600	2.3	9.8	34400			**A803_9.8 P225 IEC225M4**	**A803_9.8 P225 BX225SB4**	300
153	2558	3.5	9.7	46200			**A903_9.7 P225 IEC225M4**	**A903_9.7 P225 BX225SB4**	303

55 kW

n_2 min-1	M_2 Nm	S	i	R_{n2} N	IE...		IEC IE2*	IEC IE3	
33	14406	1.0	44.6	53900			**A903_44.6 P250 IEC250M4**	**A903_44.6 P250 BX250MA4**	303
38	12540	1.1	38.8	54100			**A903_38.8 P250 IEC250M4**	**A903_38.8 P250 BX250MA4**	303
41	11575	1.2	35.8	54000			**A903_35.8 P250 IEC250M4**	**A903_35.8 P250 BX250MA4**	303
47	10179	1.4	31.5	53800			**A903_31.5 P250 IEC250M4**	**A903_31.5 P250 BX250MA4**	303
51	9396	1.4	29.1	53400			**A903_29.1 P250 IEC250M4**	**A903_29.1 P250 BX250MA4**	303
61	7790	1.7	24.1	52600			**A903_24.1 P250 IEC250M4**	**A903_24.1 P250 BX250MA4**	303
67	7191	1.7	22.3	52000			**A903_22.3 P250 IEC250M4**	**A903_22.3 P250 BX250MA4**	303
70	6786	1.8	21.0	51700			**A903_21.0 P250 IEC250M4**	**A903_21.0 P250 BX250MA4**	303
76	6264	1.8	19.4	51100			**A903_19.4 P250 IEC250M4**	**A903_19.4 P250 BX250MA4**	303
88	5452	2.2	16.9	50100			**A903_16.9 P250 IEC250M4**	**A903_16.9 P250 BX250MA4**	303
95	5033	2.2	15.6	49400			**A903_15.6 P250 IEC250M4**	**A903_15.6 P250 BX250MA4**	303
108	4425	2.5	13.7	48400			**A903_13.7 P250 IEC250M4**	**A903_13.7 P250 BX250MA4**	303
117	4085	2.6	12.6	47600			**A903_12.6 P250 IEC250M4**	**A903_12.6 P250 BX250MA4**	303
141	3387	2.9	10.5	45900			**A903_10.5 P250 IEC250M4**	**A903_10.5 P250 BX250MA4**	303
153	3126	2.9	9.7	45100			**A903_9.7 P250 IEC250M4**	**A903_9.7 P250 BX250MA4**	303

***电机额定功率大于22KW时，技术资料仅供参考，选型时必参考电机制造商提供的信息。**

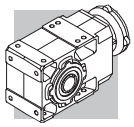

39 减速电机选型表

A 10 150 Nm

	i	n_1 = 2800 min^{-1}					n_1 = 1400 min^{-1}					
		n_2 min^{-1}	M_{n2} Nm	P_{n1} kW	R_{n1} N	R_{n2} N	n_2 min^{-1}	M_{n2} Nm	P_{n1} kW	R_{n1} N	R_{n2} N	
A 10 2_5.5	5.5	512	73	4.2	—	1830	256	73	2.1	960	2460	
A 10 2_6.3	6.3	442	80	3.9	—	1900	221	80	2.0	830	2560	
A 10 2_7.2	7.2	388	92	4.0	—	1910	194	93	2.0	630	2600	
A 10 2_8.5	8.5	329	92	3.4	—	2060	164	93	1.7	720	2790	
A 10 2_9.6	9.6	291	102	3.3	—	2090	146	128	2.1	—	2650	
A 10 2_10.6	10.6	265	125	3.7	540	2010	133	150	2.2	810	2590	
A 10 2_12.3	12.3	228	110	2.8	—	2280	114	138	1.7	—	2880	
A 10 2_13.9	13.9	201	135	3.0	620	2220	101	150	1.7	1080	2960	
A 10 2_16.4	16.4	170	140	2.7	610	2370	85	150	1.4	1140	3200	
A 10 2_18.6	18.6	151	147	2.5	650	2460	75	150	1.3	1180	3380	
A 10 2_21.4	21.4	131	150	2.2	650	2610	66	150	1.1	1200	3600	
A 10 2_23.8	23.8	118	150	2.0	750	2750	59	150	0.98	1220	3780	265
A 10 2_25.5	25.5	110	150	1.8	750	2840	55	150	0.92	1220	3900	
A 10 2_28.6	28.6	98	150	1.6	830	3000	49	150	0.82	1250	4100	
A 10 2_32.2	32.2	87	150	1.5	880	3170	43	150	0.73	1270	4310	
A 10 2_35.1	35.1	80	150	1.3	880	3300	40	150	0.67	1270	4470	
A 10 2_40.9	40.9	69	150	1.1	910	3530	34	150	0.57	1300	4770	
A 10 2_45.4	45.4	62	150	1.0	910	3700	31	150	0.52	1300	4980	
A 10 2_51.3	51.3	55	150	0.91	910	3910	27.3	150	0.46	1290	5240	
A 10 2_58.6	58.6	48	150	0.80	920	4140	23.9	150	0.40	1300	5500	
A 10 2_65.9	65.9	42	150	0.71	920	4360	21.2	150	0.35	1300	5500	
A 10 2_76.4	76.4	37	150	0.61	930	4640	18.3	150	0.31	1300	5500	
A 10 2_91.6	91.6	31	130	0.44	1020	5160	15.3	130	0.22	1300	5500	

(—) 请联系我们的技术部门并告知径向负载信息 (转向, 力的方向, 位置)

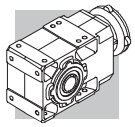

A 10 — 150 Nm

	i	n_1 = 900 min^{-1}					n_1 = 500 min^{-1}					
		n_2 min^{-1}	M_{n2} Nm	P_{n1} kW	R_{n1} N	R_{n2} N	n_2 min^{-1}	M_{n2} Nm	P_{n1} kW	R_{n1} N	R_{n2} N	
A 10 2_5.5	5.5	165	73	1.3	1300	2950	91	73	0.74	1300	3720	
A 10 2_6.3	6.3	142	80	1.3	1300	3070	79	80	0.70	1300	4100	
A 10 2_7.2	7.2	125	93	1.3	1160	3130	69	93	0.72	1300	3970	
A 10 2_8.5	8.5	106	95	1.1	1200	3330	59	110	0.72	1300	4100	
A 10 2_9.6	9.6	94	128	1.3	500	3230	52	128	0.74	1300	4160	
A 10 2_10.6	10.6	85	150	1.4	1300	3200	47	150	0.79	1300	4160	
A 10 2_12.3	12.3	73	150	1.2	180	3420	41	150	0.68	1030	4430	
A 10 2_13.9	13.9	65	150	1.1	1300	3630	36	150	0.60	1300	4680	
A 10 2_16.4	16.4	55	150	0.91	1300	3900	30	150	0.51	1300	5010	
A 10 2_18.6	18.6	48	150	0.81	1300	4120	26.9	150	0.45	1300	5270	
A 10 2_21.4	21.4	42	150	0.70	1300	4370	23.4	150	0.39	1300	5500	
A 10 2_23.8	23.8	38	150	0.63	1300	4570	21.0	150	0.35	1300	5500	265
A 10 2_25.5	25.5	35	150	0.59	1300	4710	19.6	150	0.33	1300	5500	
A 10 2_28.6	28.6	31	150	0.53	1300	4940	17.5	150	0.29	1300	5500	
A 10 2_32.2	32.2	28.0	150	0.47	1300	5190	15.5	150	0.26	1300	5500	
A 10 2_35.1	35.1	25.6	150	0.43	1300	5380	14.2	150	0.24	1300	5500	
A 10 2_40.9	40.9	22.0	150	0.37	1300	5500	12.2	150	0.20	1300	5500	
A 10 2_45.4	45.4	19.8	150	0.33	1300	5500	11.0	150	0.18	1300	5500	
A 10 2_51.3	51.3	17.6	150	0.29	1300	5500	9.8	150	0.16	1300	5500	
A 10 2_58.6	58.6	15.4	150	0.26	1300	5500	8.5	150	0.14	1300	5500	
A 10 2_65.9	65.9	13.7	150	0.23	1300	5500	7.6	150	0.13	1300	5500	
A 10 2_76.4	76.4	11.8	150	0.20	1300	5500	6.5	150	0.11	1300	5500	
A 10 2_91.6	91.6	9.8	130	0.14	1300	5500	5.5	130	0.08	1300	5500	

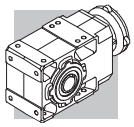

A 20 — 250 Nm

	i	n_1 = 2800 min^{-1}					n_1 = 1400 min^{-1}					
		n_2 min^{-1}	M_{n2} Nm	P_{n1} kW	R_{n1} N	R_{n2} N	n_2 min^{-1}	M_{n2} Nm	P_{n1} kW	R_{n1} N	R_{n2} N	
A 20 2_5.4	5.4	523	96	5.6	610	1910	262	121	3.5	770	2400	
A 20 2_6.5	6.5	428	107	5.1	490	2010	214	135	3.2	610	2530	
A 20 2_7.3	7.3	384	113	4.8	510	2070	192	143	3.1	630	2600	
A 20 2_8.4	8.4	334	116	4.3	510	2180	167	146	2.7	650	2750	
A 20 2_9.4	9.4	299	122	4.1	530	2260	149	154	2.6	660	2840	
A 20 2_10.3	10.3	271	183	5.5	650	1970	135	225	3.4	890	2520	
A 20 2_12.0	12.0	234	128	3.3	550	2280	117	161	2.1	690	3120	
A 20 2_14.1	14.1	199	199	4.4	750	2210	99	245	2.7	960	2820	
A 20 2_16.2	16.2	173	209	4.0	700	2310	87	250	2.4	1040	2990	
A 20 2_18.1	18.1	155	216	3.7	760	2400	77	250	2.2	1210	3170	
A 20 2_21.2	21.2	132	226	3.3	710	2540	66	250	1.8	1290	3430	
A 20 2_23.1	23.1	121	232	3.1	710	2620	61	250	1.7	1360	3580	
A 20 2_26.5	26.5	106	241	2.8	660	2750	53	250	1.5	1410	3820	
A 20 2_29.2	29.2	96	249	2.7	670	2850	48	250	1.3	1510	4000	
A 20 2_31.3	31.3	89	250	2.5	660	2940	45	250	1.2	1510	4130	
A 20 2_35.4	35.4	79	250	2.2	800	3140	40	250	1.1	1650	4380	
A 20 2_39.6	39.6	71	250	2.0	880	3320	35	250	0.98	1710	4600	
A 20 2_43.2	43.2	65	250	1.8	880	3460	32	250	0.90	1710	4790	
A 20 2_48.3	48.3	58	250	1.6	920	3650	29.0	250	0.81	1720	5030	269
A 20 2_53.7	53.7	52	250	1.5	920	3840	26.1	250	0.73	1720	5270	
A 20 2_63.1	63.1	44	245	1.2	1040	4180	22.2	245	0.61	1740	5680	
A 20 2_71.0	71.0	39	210	0.92	1360	4640	19.7	210	0.46	1790	6200	
A 20 2_79.9	79.9	35	210	0.82	1360	4880	17.5	210	0.41	1790	6200	
A 20 2_92.3	92.3	30	200	0.68	1380	5250	15.2	200	0.34	1810	6200	
A 20 3_109.2	109.2	25.6	165	0.49	1180	5900	12.8	205	0.30	1300	6200	
A 20 3_120.5	120.5	23.2	168	0.45	1130	6110	11.6	210	0.28	1300	6200	
A 20 3_129.1	129.1	21.7	175	0.44	1210	6200	10.8	215	0.27	1300	6200	
A 20 3_146.1	146.1	19.2	183	0.40	1160	6200	9.6	230	0.25	1300	6200	
A 20 3_163.4	163.4	17.1	190	0.37	1240	6200	8.6	235	0.23	1300	6200	
A 20 3_178.3	178.3	15.7	195	0.35	1200	6200	7.9	245	0.22	1300	6200	
A 20 3_199.2	199.2	14.1	200	0.32	1270	6200	7.0	250	0.20	1300	6200	
A 20 3_221.3	221.3	12.7	203	0.30	1240	6200	6.3	250	0.18	1300	6200	
A 20 3_260.5	260.5	10.8	214	0.26	1270	6200	5.4	250	0.15	1300	6200	
A 20 3_292.8	292.8	9.6	218	0.24	1300	6200	4.8	250	0.14	1300	6200	
A 20 3_329.4	329.4	8.5	221	0.22	1300	6200	4.3	250	0.12	1300	6200	
A 20 3_380.9	380.9	7.4	226	0.19	1300	6200	3.7	250	0.11	1300	6200	

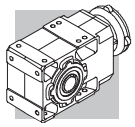

A 20 — 250 Nm

	i	n_1 = 900 min^{-1}					n_1 = 500 min^{-1}					
		n_2 min^{-1}	M_{n2} Nm	P_{n1} kW	R_{n1} N	R_{n2} N	n_2 min^{-1}	M_{n2} Nm	P_{n1} kW	R_{n1} N	R_{n2} N	
A 20 2_5.4	5.4	168	140	2.6	900	2780	93	170	1.8	1100	3390	
A 20 2_6.5	6.5	138	156	2.4	720	2930	76	190	1.6	860	3570	
A 20 2_7.3	7.3	123	165	2.3	740	3020	69	201	1.5	890	3670	
A 20 2_8.4	8.4	108	170	2.0	730	3180	60	206	1.4	910	3870	
A 20 2_9.4	9.4	96	179	1.9	760	3290	53	210	1.2	1090	4050	
A 20 2_10.3	10.3	87	250	2.4	1190	2990	48	250	1.3	2200	3980	
A 20 2_12.0	12.0	75	187	1.6	790	2990	42	210	0.98	1336	4510	
A 20 2_14.1	14.1	64	250	1.8	1610	3490	36	250	0.99	2200	4590	
A 20 2_16.2	16.2	56	250	1.6	1690	3730	31	250	0.86	2200	4880	
A 20 2_18.1	18.1	50	250	1.4	1860	3930	27.6	250	0.77	2200	5140	
A 20 2_21.2	21.2	42	250	1.2	1940	4230	23.6	250	0.66	2200	5500	
A 20 2_23.1	23.1	39	250	1.1	1970	4400	21.6	250	0.60	2200	5710	
A 20 2_26.5	26.5	34	250	0.95	1980	4680	18.9	250	0.53	2200	6050	
A 20 2_29.2	29.2	31	250	0.86	2000	4890	17.1	250	0.48	2200	6200	
A 20 2_31.3	31.3	28.7	250	0.80	2000	5040	16.0	250	0.44	2200	6200	
A 20 2_35.4	35.4	25.4	250	0.71	2020	5330	14.1	250	0.39	2200	6200	
A 20 2_39.6	39.6	22.7	250	0.63	2040	5590	12.6	250	0.35	2200	6200	
A 20 2_43.2	43.2	20.8	250	0.58	2040	5800	11.6	250	0.32	2200	6200	
A 20 2_48.3	48.3	18.6	250	0.52	2040	6080	10.4	250	0.29	2200	6200	269
A 20 2_53.7	53.7	16.8	250	0.47	2050	6200	9.3	250	0.26	2200	6200	
A 20 2_63.1	63.1	14.3	245	0.39	2060	6200	7.9	245	0.22	2200	6200	
A 20 2_71.0	71.0	12.7	210	0.30	2120	6200	7.0	210	0.16	2200	6200	
A 20 2_79.9	79.9	11.3	210	0.26	2120	6200	6.3	210	0.15	2200	6200	
A 20 2_92.3	92.3	9.7	200	0.22	2140	6200	5.4	200	0.12	2200	6200	
A 20 3_109.2	109.2	8.2	240	0.23	1300	6200	4.6	250	0.13	1300	6200	
A 20 3_120.5	120.5	7.5	245	0.21	1300	6200	4.1	250	0.12	1300	6200	
A 20 3_129.1	129.1	7.0	250	0.20	1300	6200	3.9	250	0.11	1300	6200	
A 20 3_146.1	146.1	6.2	250	0.18	1300	6200	3.4	250	0.10	1300	6200	
A 20 3_163.4	163.4	5.5	250	0.16	1300	6200	3.1	250	0.09	1300	6200	
A 20 3_178.3	178.3	5.0	250	0.15	1300	6200	2.8	250	0.08	1300	6200	
A 20 3_199.2	199.2	4.5	250	0.13	1300	6200	2.5	250	0.07	1300	6200	
A 20 3_221.3	221.3	4.1	250	0.12	1300	6200	2.3	250	0.06	1300	6200	
A 20 3_260.5	260.5	3.5	250	0.10	1300	6200	1.9	250	0.06	1300	6200	
A 20 3_292.8	292.8	3.1	250	0.09	1300	6200	1.7	250	0.05	1300	6200	
A 20 3_329.4	329.4	2.7	250	0.08	1300	6200	1.5	250	0.04	1300	6200	
A 20 3_380.9	380.9	2.4	250	0.07	1300	6200	1.3	250	0.04	1300	6200	

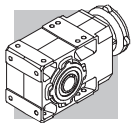

A 30 — 410 Nm

	i	n_1 = 2800 min^{-1}					n_1 = 1400 min^{-1}					
		n_2 min^{-1}	M_{n2} Nm	P_{n1} kW	R_{n1} N	R_{n2} N	n_2 min^{-1}	M_{n2} Nm	P_{n1} kW	R_{n1} N	R_{n2} N	
A 30 2_5.4	5.4	517	175	10.1	1130	2480	259	220	6.3	1430	3130	
A 30 2_6.4	6.4	437	185	9.0	1120	2630	218	230	5.6	1470	3330	
A 30 2_7.0	7.0	399	194	8.6	1140	2690	199	245	5.4	1430	3380	
A 30 2_8.5	8.5	331	200	7.4	1220	2900	165	250	4.6	1570	3660	
A 30 2_9.3	9.3	301	214	7.2	1140	2950	150	270	4.5	1440	3710	
A 30 2_10.5	10.5	268	278	8.3	1800	2770	134	340	5.1	2200	3550	
A 30 2_11.8	11.8	238	230	6.1	1130	3200	119	290	3.8	1420	4030	
A 30 2_13.6	13.6	206	301	6.9	1830	3030	103	370	4.3	2200	3870	
A 30 2_16.3	16.3	171	318	6.1	1830	3240	86	385	3.7	2200	4170	
A 30 2_18.0	18.0	156	327	5.7	1840	3350	78	400	3.5	2200	4290	
A 30 2_20.5	20.5	136	340	5.2	1830	3510	68	410	3.1	2200	4530	
A 30 2_22.8	22.8	123	351	4.8	1850	3640	62	410	2.8	2200	4770	
A 30 2_26.5	26.5	106	367	4.3	1840	3850	53	410	2.4	2200	5150	
A 30 2_29.3	29.3	96	378	4.0	1847	3980	48	410	2.2	2200	5400	
A 30 2_33.4	33.4	84	393	3.7	1840	4170	42	410	1.9	2200	5750	
A 30 2_36.6	36.6	76	404	3.4	1840	4310	38	410	1.7	2200	6010	
A 30 2_39.3	39.3	71	410	3.3	1810	4430	36	410	1.6	2200	6200	
A 30 2_43.4	43.4	64	410	2.9	1850	4660	32	410	1.5	2200	6490	
A 30 2_48.3	48.3	58	410	2.6	1860	4920	29.0	410	1.3	2200	6810	
A 30 2_52.7	52.7	53	410	2.4	1860	5130	26.6	410	1.2	2200	7080	273
A 30 2_59.4	59.4	47	400	2.1	1890	5500	23.6	400	1.0	2200	7530	
A 30 2_66.0	66.0	42	390	1.8	1900	5840	21.2	390	0.92	2200	7940	
A 30 2_76.5	76.5	37	350	1.4	1950	6480	18.3	350	0.71	2200	8690	
A 30 2_86.7	86.7	32	320	1.2	2000	7010	16.2	320	0.58	2200	9310	
A 30 2_97.5	97.5	28.7	300	0.96	2020	7480	14.4	300	0.48	2200	9600	
A 30 3_109.1	109.1	25.7	240	0.71	1300	8240	12.8	300	0.44	1300	9600	
A 30 3_120.5	120.5	23.2	243	0.65	1120	8540	11.6	300	0.40	1300	9600	
A 30 3_137.4	137.4	20.4	250	0.59	1300	8950	10.2	315	0.37	1300	9600	
A 30 3_150.7	150.7	18.6	261	0.56	1170	9210	9.3	330	0.35	1300	9600	
A 30 3_161.4	161.4	17.3	270	0.54	1300	9410	8.7	340	0.34	1300	9600	
A 30 3_178.5	178.5	15.7	274	0.49	1210	9600	7.8	345	0.31	1300	9600	
A 30 3_198.5	198.5	14.1	280	0.45	1300	9600	7.1	350	0.28	1300	9600	
A 30 3_216.6	216.6	12.9	287	0.43	1240	9600	6.5	360	0.27	1300	9600	
A 30 3_244.3	244.3	11.5	295	0.39	1300	9600	5.7	370	0.24	1300	9600	
A 30 3_271.5	271.5	10.3	301	0.36	1280	9600	5.2	380	0.23	1300	9600	
A 30 3_314.5	314.5	8.9	309	0.32	1300	9600	4.5	390	0.20	1300	9600	
A 30 3_356.3	356.3	7.9	320	0.29	1300	9600	3.9	370	0.17	1300	9600	
A 30 3_400.8	400.8	7.0	320	0.26	1300	9600	3.5	360	0.14	1300	9600	

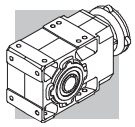

A 30 — 410 Nm

	i	n_1 = 900 min^{-1}					n_1 = 500 min^{-1}					
		n_2 min^{-1}	M_{n2} Nm	P_{n1} kW	R_{n1} N	R_{n2} N	n_2 min^{-1}	M_{n2} Nm	P_{n1} kW	R_{n1} N	R_{n2} N	
A 30 2_5.4	5.4	166	255	4.7	1660	3630	92	300	3.1	2200	4470	
A 30 2_6.4	6.4	140	270	4.2	1630	3830	78	300	2.6	2200	4830	
A 30 2_7.0	7.0	128	284	4.1	1650	3920	71	300	2.4	2200	5040	
A 30 2_8.5	8.5	106	290	3.4	1810	4240	59	300	2.0	2200	5470	
A 30 2_9.3	9.3	97	300	3.2	1900	4380	54	300	1.8	2200	5710	
A 30 2_10.5	10.5	86	391	3.7	2200	4130	48	410	2.2	2200	5400	
A 30 2_11.8	11.8	76	300	2.6	2200	4880	42	300	1.4	2200	6320	
A 30 2_13.6	13.6	66	410	3.0	2200	4600	37	410	1.7	2200	6110	
A 30 2_16.3	16.3	55	410	2.5	2200	5044	31	410	1.4	2200	6650	
A 30 2_18.0	18.0	50	410	2.3	2200	5280	27.8	410	1.3	2200	6940	
A 30 2_20.5	20.5	44	410	2.0	2200	5630	24.3	410	1.1	2200	7360	
A 30 2_22.8	22.8	40	410	1.8	2200	5910	22.0	410	1.0	2200	7700	
A 30 2_26.5	26.5	34	410	1.5	2200	6340	18.8	410	0.86	2200	8230	
A 30 2_29.3	29.3	31	410	1.4	2200	6640	17.1	410	0.78	2200	8590	
A 30 2_33.4	33.4	26.9	410	1.2	2200	7040	15.0	410	0.68	2200	9080	
A 30 2_36.6	36.6	24.6	410	1.1	2200	7340	13.6	410	0.62	2200	9440	
A 30 2_39.3	39.3	22.9	410	1.0	2200	7560	12.7	410	0.58	2200	9600	
A 30 2_43.4	43.4	20.7	410	0.95	2200	7900	11.5	410	0.53	2200	9600	
A 30 2_48.3	48.3	18.6	410	0.85	2200	8270	10.4	410	0.47	2200	9600	
A 30 2_52.7	52.7	17.1	410	0.78	2200	8590	9.5	410	0.43	2200	9600	273
A 30 2_59.4	59.4	15.1	400	0.67	2200	9090	8.4	400	0.37	2200	9600	
A 30 2_66.0	66.0	13.6	390	0.59	2200	9560	7.6	390	0.33	2200	9600	
A 30 2_76.5	76.5	11.8	350	0.46	2200	9600	6.5	350	0.25	2200	9600	
A 30 2_86.7	86.7	10.4	320	0.37	2200	9600	5.8	320	0.21	2200	9600	
A 30 2_97.5	97.5	9.2	300	0.31	2200	9600	5.1	300	0.17	2200	9600	
A 30 3_109.1	109.1	8.3	350	0.33	1300	9600	4.6	370	0.20	1300	9600	
A 30 3_120.5	120.5	7.5	354	0.30	1300	9600	4.2	410	0.20	1300	9600	
A 30 3_137.4	137.4	6.5	370	0.28	1300	9600	3.6	410	0.17	1300	9600	
A 30 3_150.7	150.7	6.0	381	0.26	1300	9600	3.3	410	0.16	1300	9600	
A 30 3_161.4	161.4	5.6	390	0.25	1300	9600	3.1	410	0.15	1300	9600	
A 30 3_178.5	178.5	5.0	400	0.23	1300	9600	2.8	410	0.13	1300	9600	
A 30 3_198.5	198.5	4.5	410	0.21	1300	9600	2.5	410	0.12	1300	9600	
A 30 3_216.6	216.6	4.2	410	0.20	1300	9600	2.3	410	0.11	1300	9600	
A 30 3_244.3	244.3	3.7	410	0.17	1300	9600	2.0	410	0.10	1300	9600	
A 30 3_271.5	271.5	3.3	410	0.16	1300	9600	1.8	410	0.09	1300	9600	
A 30 3_314.5	314.5	2.9	410	0.13	1300	9600	1.6	410	0.07	1300	9600	
A 30 3_356.3	356.3	2.5	380	0.11	1300	9600	1.4	380	0.06	1300	9600	
A 30 3_400.8	400.8	2.2	360	0.09	1300	9600	1.2	360	0.05	1300	9600	

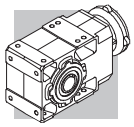

A 35 — 600 Nm

	i	n_1 = 2800 min^{-1}					n_1 = 1400 min^{-1}					
		n_2 min^{-1}	M_{n2} Nm	P_{n1} kW	R_{n1} N	R_{n2} N	n_2 min^{-1}	M_{n2} Nm	P_{n1} kW	R_{n1} N	R_{n2} N	
A 35 2_5.4	5.4	517	246	14.2	1420	4000	259	310	8.9	1790	5050	
A 35 2_6.4	6.4	437	262	12.7	1420	4230	218	330	8.0	1790	5330	
A 35 2_7.0	7.0	399	278	12.3	1410	4320	199	350	7.8	1790	5440	
A 35 2_8.5	8.5	331	286	10.5	1450	4650	165	360	6.6	1830	5850	
A 35 2_9.3	9.3	301	302	10.1	1450	4760	150	380	6.4	1830	6000	
A 35 2_10.6	10.6	263	310	9.1	1440	5010	132	390	5.7	1830	6310	
A 35 2_11.8	11.8	238	317	8.4	1480	5200	119	400	5.3	1860	6550	
A 35 2_13.1	13.1	214	400	10.9	1630	4470	107	550	6.6	2100	5780	
A 35 2_15.5	15.5	181	430	10.0	1620	4670	90	570	5.7	2120	6190	
A 35 2_17.0	17.0	165	465	9.7	1620	4730	83	600	5.5	2130	6310	
A 35 2_20.4	20.4	137	500	8.4	1630	5080	69	600	4.6	2170	6930	
A 35 2_22.5	22.5	125	540	7.8	1660	5290	62	600	4.2	2200	7260	
A 35 2_25.7	25.7	109	585	7.1	1640	5540	55	600	3.6	2200	7740	
A 35 2_28.4	28.4	98	600	6.6	1660	5760	49	600	3.3	2200	8130	
A 35 2_33.2	33.2	84	600	5.6	910	6240	42	600	2.8	2200	8730	
A 35 2_36.6	36.6	76	600	5.1	1080	6560	38	600	2.6	2200	9140	
A 35 2_41.8	41.8	67	600	4.5	1140	7010	34	600	2.2	2200	9700	
A 35 2_45.8	45.8	61	600	4.1	1260	7330	31	600	2.0	2200	10100	
A 35 2_49.1	49.1	57	600	3.8	1260	7580	28.5	600	1.9	2200	10400	
A 35 2_54.3	54.3	52	600	3.4	1360	7950	25.8	600	1.7	2200	10900	277
A 35 2_60.4	60.4	46	600	3.1	1470	8360	23.2	600	1.6	2200	11400	
A 35 2_65.8	65.8	43	600	2.8	1470	8700	21.3	600	1.4	2200	11800	
A 35 2_74.3	74.3	38	600	2.5	1560	9200	18.8	600	1.3	2200	12000	
A 35 2_82.5	82.5	34	600	2.3	1560	9650	17.0	600	1.1	2200	12000	
A 35 2_95.6	95.6	29.3	540	1.8	1860	10600	14.6	540	0.88	2200	12000	
A 35 3_105.5	105.5	26.5	430	1.3	550	12000	13.3	525	0.80	780	12000	
A 35 3_116.9	116.9	24.0	455	1.3	650	12000	12.0	560	0.77	870	12000	
A 35 3_136.3	136.3	20.5	470	1.1	870	12000	10.3	575	0.68	1110	12000	
A 35 3_150.6	150.6	18.6	495	1.1	900	12000	9.3	600	0.64	1160	12000	
A 35 3_171.8	171.8	16.3	505	0.95	960	12000	8.1	600	0.56	1250	12000	
A 35 3_188.3	188.3	14.9	525	0.90	990	12000	7.4	600	0.51	1300	12000	
A 35 3_201.8	201.8	13.9	525	0.84	1020	12000	6.9	600	0.48	1300	12000	
A 35 3_223.2	223.2	12.5	545	0.79	1050	12000	6.3	600	0.43	1300	12000	
A 35 3_248.1	248.1	11.3	565	0.73	1080	12000	5.6	600	0.39	1300	12000	
A 35 3_270.7	270.7	10.3	570	0.68	1110	12000	5.2	600	0.36	1300	12000	
A 35 3_305.4	305.4	9.2	585	0.62	1140	12000	4.6	600	0.32	1300	12000	
A 35 3_339.3	339.3	8.3	520	0.49	1210	12000	4.1	520	0.25	1300	12000	
A 35 3_393.2	393.2	7.1	465	0.38	1260	12000	3.6	465	0.19	1300	12000	

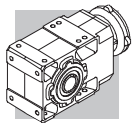

A 35 — 600 Nm

	i	n_1 = 900 min^{-1}					n_1 = 500 min^{-1}					
		n_2 min^{-1}	M_{n2} Nm	P_{n1} kW	R_{n1} N	R_{n2} N	n_2 min^{-1}	M_{n2} Nm	P_{n1} kW	R_{n1} N	R_{n2} N	
A 35 2_5.4	5.4	166	340	6.3	2150	5940	92	340	3.5	2200	7600	
A 35 2_6.4	6.4	140	350	5.5	2190	6340	78	350	3.0	2200	8090	
A 35 2_7.0	7.0	128	370	5.3	2200	6490	71	370	2.9	2200	8290	
A 35 2_8.5	8.5	106	380	4.5	2200	6970	59	380	2.5	2200	8890	
A 35 2_9.3	9.3	97	400	4.3	2200	7160	54	400	2.4	2200	9140	
A 35 2_10.6	10.6	85	400	3.8	2200	7570	47	400	2.1	2200	9650	
A 35 2_11.8	11.8	76	400	3.4	2200	7910	42	400	1.9	2200	10100	
A 35 2_13.1	13.1	69	600	4.6	2200	6910	38	600	2.6	2200	9140	
A 35 2_15.5	15.5	58	600	3.9	2090	7510	32	600	2.2	2200	9860	
A 35 2_17.0	17.0	53	600	3.5	2200	7840	29.5	600	2.0	2200	10300	
A 35 2_20.4	20.4	44	600	2.9	2200	8560	24.5	600	1.6	2200	11100	
A 35 2_22.5	22.5	40	600	2.7	2200	8950	22.2	600	1.5	2200	11600	
A 35 2_25.7	25.7	35	600	2.3	2200	9500	19.5	600	1.3	2200	12000	
A 35 2_28.4	28.4	32	600	2.1	2200	9950	17.6	600	1.2	2200	12000	
A 35 2_33.2	33.2	27.1	600	1.8	2200	10700	15.1	600	1.0	2200	12000	
A 35 2_36.6	36.6	24.6	600	1.6	2200	11100	13.7	600	0.91	2200	12000	
A 35 2_41.8	41.8	21.5	600	1.4	2200	11800	12.0	600	0.80	2200	12000	
A 35 2_45.8	45.8	19.6	600	1.3	2200	12000	10.9	600	0.73	2200	12000	
A 35 2_49.1	49.1	18.3	600	1.2	2200	12000	10.2	600	0.68	2200	12000	
A 35 2_54.3	54.3	16.6	600	1.1	2200	12000	9.2	600	0.62	2200	12000	277
A 35 2_60.4	60.4	14.9	600	1.0	2200	12000	8.3	600	0.55	2200	12000	
A 35 2_65.8	65.8	13.7	600	0.91	2200	12000	7.6	600	0.51	2200	12000	
A 35 2_74.3	74.3	12.1	600	0.81	2200	12000	6.7	600	0.45	2200	12000	
A 35 2_82.5	82.5	10.9	600	0.73	2200	12000	6.1	600	0.40	2200	12000	
A 35 2_95.6	95.6	9.4	540	0.57	2200	12000	5.2	540	0.31	2200	12000	
A 35 3_105.5	105.5	8.5	600	0.59	940	12000	4.7	600	0.33	1300	12000	
A 35 3_116.9	116.9	7.7	600	0.53	1230	12000	4.3	600	0.30	1300	12000	
A 35 3_136.3	136.3	6.6	600	0.46	1300	12000	3.7	600	0.25	1300	12000	
A 35 3_150.6	150.6	6.0	600	0.41	1300	12000	3.3	600	0.23	1300	12000	
A 35 3_171.8	171.8	5.2	600	0.36	1300	12000	2.9	600	0.20	1300	12000	
A 35 3_188.3	188.3	4.8	600	0.33	1300	12000	2.7	600	0.18	1300	12000	
A 35 3_201.8	201.8	4.5	600	0.31	1300	12000	2.5	600	0.17	1300	12000	
A 35 3_223.2	223.2	4.0	600	0.28	1300	12000	2.2	600	0.15	1300	12000	
A 35 3_248.1	248.1	3.6	600	0.25	1300	12000	2.0	600	0.14	1300	12000	
A 35 3_270.7	270.7	3.3	600	0.23	1300	12000	1.8	600	0.13	1300	12000	
A 35 3_305.4	305.4	2.9	600	0.20	1300	12000	1.6	600	0.11	1300	12000	
A 35 3_339.3	339.3	2.7	520	0.16	1300	12000	1.5	520	0.09	1300	12000	
A 35 3_393.2	393.2	2.3	465	0.12	1300	12000	1.3	465	0.07	1300	12000	

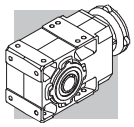

A 41 — 850 Nm

	i	n_1 = 2800 min^{-1}					n_1 = 1400 min^{-1}					
		n_2 min^{-1}	M_{n2} Nm	P_{n1} kW	R_{n1} N	R_{n2} N	n_2 min^{-1}	M_{n2} Nm	P_{n1} kW	R_{n1} N	R_{n2} N	
A 41 2_5.2	5.2	534	450	27	1790	4350	267	550	16.4	2450	5560	
A 41 2_7.1	7.1	393	490	22	1890	4850	197	550	12.0	2670	6430	
A 41 2_8.3	8.3	336	510	19.1	1900	5140	168	550	10.3	2750	6920	
A 41 2_9.2	9.2	304	530	18.0	1980	5300	152	550	9.3	2860	7240	
A 41 2_10.1	10.1	276	435	13.4	2680	6030	138	535	8.2	3390	7650	
A 41 2_11.7	11.7	238	550	14.6	2050	5870	119	550	7.3	2950	8070	
A 41 2_13.8	13.8	204	480	10.9	2690	6680	102	585	6.6	3430	8510	
A 41 2_16.1	16.1	174	500	9.7	2700	7070	87	610	5.9	3430	9000	
A 41 2_17.8	17.8	158	515	9.0	2730	7310	79	630	5.5	3470	9300	
A 41 2_22.7	22.7	123	550	7.6	2730	7970	62	680	4.7	3460	10100	
A 41 2_28.3	28.3	99	595	6.6	2670	8570	49	730	4.0	3450	10900	
A 41 2_35.9	35.9	78	635	5.5	2590	9320	39	780	3.4	3410	11800	
A 41 2_45.1	45.1	62	680	4.7	2500	10100	31	830	2.9	3330	12800	
A 41 2_48.3	48.3	58	690	4.5	2430	10300	29.0	850	2.7	3200	13100	
A 41 2_53.1	53.1	53	700	4.1	2470	10700	26.3	850	2.5	3330	13700	
A 41 2_58.8	58.8	48	730	3.9	2390	11100	23.8	850	2.3	3460	14300	281
A 41 2_64.2	64.2	44	740	3.6	2320	11500	21.8	850	2.1	3460	14800	
A 41 2_71.3	71.3	39	780	3.4	2120	11800	19.6	850	1.9	3470	15000	
A 41 2_79.2	79.2	35	800	3.1	1990	12300	17.7	800	1.6	3500	15000	
A 41 3_92.8	92.8	30	650	2.3	270	14000	15.1	800	1.4	430	15000	
A 41 3_115.9	115.9	24.2	800	2.2	310	14600	12.1	850	1.2	980	15000	
A 41 3_146.9	146.9	19.1	850	1.9	790	15000	9.5	850	0.93	1640	15000	
A 41 3_184.4	184.4	15.2	850	1.5	1290	15000	7.6	850	0.74	1770	15000	
A 41 3_197.5	197.5	14.2	850	1.4	1360	15000	7.1	850	0.69	1790	15000	
A 41 3_217.4	217.4	12.9	850	1.3	1390	15000	6.4	850	0.63	1820	15000	
A 41 3_240.6	240.6	11.6	850	1.1	1410	15000	5.8	850	0.57	1840	15000	
A 41 3_262.5	262.5	10.7	850	1.0	1430	15000	5.3	850	0.52	1860	15000	
A 41 3_291.7	291.7	9.6	850	0.94	1450	15000	4.8	850	0.47	1880	15000	
A 41 3_324.2	324.2	8.6	850	0.84	1470	15000	4.3	850	0.42	1900	15000	
A 41 3_376.8	376.8	7.4	850	0.73	1500	15000	3.7	850	0.36	1930	15000	

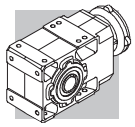

A 41 — 850 Nm

	i	n_1 = 900 min^{-1}					n_1 = 500 min^{-1}					
		n_2 min^{-1}	M_{n2} Nm	P_{n1} kW	R_{n1} N	R_{n2} N	n_2 min^{-1}	M_{n2} Nm	P_{n1} kW	R_{n1} N	R_{n2} N	
A 41 2_5.2	5.2	172	550	10.5	3140	6850	95	550	5.8	3500	8900	
A 41 2_7.1	7.1	126	550	7.7	3360	7870	70	550	4.3	3500	10100	
A 41 2_8.3	8.3	108	550	6.6	3440	8430	60	550	3.7	3500	10800	
A 41 2_9.2	9.2	98	550	6.0	3500	8800	54	550	3.3	3500	11300	
A 41 2_10.1	10.1	89	610	6.0	3500	8920	49	730	4.0	3500	10900	
A 41 2_11.7	11.7	77	550	4.7	3500	9760	43	550	2.6	3500	12400	
A 41 2_13.8	13.8	65	670	4.9	3500	9900	36	800	3.2	3500	12100	
A 41 2_16.1	16.1	56	700	4.4	3500	10500	31	830	2.9	3500	12800	
A 41 2_17.8	17.8	51	720	4.1	3500	10800	28.1	850	2.7	3500	13300	
A 41 2_22.7	22.7	40	780	3.4	3500	11700	22.0	850	2.1	3500	14800	
A 41 2_28.3	28.3	32	830	2.9	3500	12700	17.7	850	1.7	3500	15000	
A 41 2_35.9	35.9	25.1	850	2.4	3500	14000	13.9	850	1.3	3500	15000	
A 41 2_45.1	45.1	20.0	850	1.9	3500	15000	11.1	850	1.1	3500	15000	
A 41 2_48.3	48.3	18.6	850	1.8	3500	15000	10.4	850	0.98	3500	15000	
A 41 2_53.1	53.1	16.9	850	1.6	3500	15000	9.4	850	0.89	3500	15000	
A 41 2_58.8	58.8	15.3	850	1.4	3500	15000	8.5	850	0.81	3500	15000	281
A 41 2_64.2	64.2	14.0	850	1.3	3300	15000	7.8	850	0.74	3500	15000	
A 41 2_71.3	71.3	12.6	850	1.2	3500	15000	7.0	850	0.66	3500	15000	
A 41 2_79.2	79.2	11.4	800	1.0	3500	15000	6.3	800	0.56	3500	15000	
A 41 3_92.8	92.8	9.7	800	0.89	1080	15000	5.4	800	0.50	2110	15000	
A 41 3_115.9	115.9	7.8	850	0.76	1630	15000	4.3	850	0.42	2200	15000	
A 41 3_146.9	146.9	6.1	850	0.60	2020	15000	3.4	850	0.33	2200	15000	
A 41 3_184.4	184.4	4.9	850	0.48	2100	15000	2.7	850	0.27	2200	15000	
A 41 3_197.5	197.5	4.6	850	0.45	2120	15000	2.5	850	0.25	2200	15000	
A 41 3_217.4	217.4	4.1	850	0.40	2150	15000	2.3	850	0.22	2200	15000	
A 41 3_240.6	240.6	3.7	850	0.37	2170	15000	2.1	850	0.20	2200	15000	
A 41 3_262.5	262.5	3.4	850	0.34	2190	15000	1.9	850	0.19	2200	15000	
A 41 3_291.7	291.7	3.1	850	0.30	2200	15000	1.7	850	0.17	2200	15000	
A 41 3_324.2	324.2	2.8	850	0.27	2200	15000	1.5	850	0.15	2200	15000	
A 41 3_376.8	376.8	2.4	850	0.23	2200	15000	1.3	850	0.13	2200	15000	

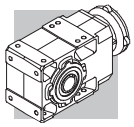

A 50 — 1500 Nm

	i	n_1 = 2800 min^{-1}					n_1 = 1400 min^{-1}					
		n_2 min^{-1}	M_{n2} Nm	P_{n1} kW	R_{n1} N	R_{n2} N	n_2 min^{-1}	M_{n2} Nm	P_{n1} kW	R_{n1} N	R_{n2} N	
A 50 2_7.7	7.7	362	550	22	2300	7920	181	700	14.1	2890	9960	
A 50 2_9.7	9.7	288	600	19.2	2330	8530	144	750	12.0	2950	10800	
A 50 2_13.1	13.1	214	600	14.3	2460	9600	107	750	8.9	3110	12100	
A 50 2_16.6	16.6	169	640	12.0	2490	10400	84	800	7.5	3150	13100	
A 50 2_20.9	20.9	134	640	9.5	2540	11400	67	800	6.0	3210	14400	
A 50 3_24.0	24.0	116	1150	15.4	1850	7020	58	1500	10.0	2100	8540	
A 50 3_26.4	26.4	106	1200	14.6	2100	7170	53	1500	9.1	2690	9100	
A 50 3_32.4	32.4	86	1290	12.8	1800	4630	43	1500	7.5	2760	10400	
A 50 3_35.6	35.6	79	1340	12.1	2080	7830	39	1500	6.8	3290	11000	
A 50 3_40.9	40.9	68	1415	11.1	1740	8130	34	1500	5.9	3220	11900	
A 50 3_45.0	45.0	62	1470	10.5	2030	8340	31	1500	5.4	3440	12600	
A 50 3_51.7	51.7	54	1500	9.4	1680	8970	27.1	1500	4.7	3400	13600	
A 50 3_56.8	56.8	49	1500	8.5	2150	9540	24.6	1500	4.3	3480	14400	
A 50 3_63.9	63.9	44	1500	7.6	1900	10300	21.9	1500	3.8	3450	15300	
A 50 3_70.2	70.2	40	1500	6.9	2350	10900	19.9	1500	3.4	3500	16100	
A 50 3_81.5	81.5	34	1500	5.9	2170	11900	17.2	1500	3.0	3500	17300	
A 50 3_89.5	89.5	31	1500	5.4	2590	12600	15.6	1500	2.7	3500	18200	
A 50 3_99.5	99.5	28.1	1500	4.9	2260	13400	14.1	1500	2.4	3500	19200	
A 50 3_109.4	109.4	25.6	1500	4.4	2680	14100	12.8	1500	2.2	3500	20000	
A 50 3_118.0	118.0	23.7	1500	4.1	2390	14700	11.9	1500	2.0	3500	20000	285
A 50 3_129.7	129.7	21.6	1500	3.7	2720	15400	10.8	1500	1.9	3500	20000	
A 50 3_140.6	140.6	19.9	1500	3.4	2440	16100	10.0	1500	1.7	3500	20000	
A 50 3_154.6	154.6	18.1	1500	3.1	2730	16900	9.1	1500	1.6	3500	20000	
A 50 3_173.4	173.4	16.2	1500	2.8	2480	17900	8.1	1500	1.4	3500	20000	
A 50 3_190.6	190.6	14.7	1500	2.5	2740	18800	7.3	1500	1.3	3500	20000	
A 50 4_211.0	211.0	13.3	1500	2.3	1930	20000	6.6	1500	1.2	2200	20000	
A 50 4_232.0	232.0	12.1	1500	2.1	1970	20000	6.0	1500	1.1	2200	20000	
A 50 4_260.9	260.9	10.7	1500	1.9	2010	20000	5.4	1500	0.95	2200	20000	
A 50 4_286.8	286.8	9.8	1500	1.7	2040	20000	4.9	1500	0.86	2200	20000	
A 50 4_332.6	332.6	8.4	1500	1.5	2080	20000	4.2	1500	0.74	2200	20000	
A 50 4_365.6	365.6	7.7	1500	1.4	2100	20000	3.8	1500	0.68	2200	20000	
A 50 4_406.4	406.4	6.9	1500	1.2	2130	20000	3.4	1500	0.61	2200	20000	
A 50 4_446.8	446.8	6.3	1500	1.1	2140	20000	3.1	1500	0.55	2200	20000	
A 50 4_481.6	481.6	5.8	1500	1.0	2160	20000	2.9	1500	0.51	2200	20000	
A 50 4_529.5	529.5	5.3	1500	0.93	2170	20000	2.6	1500	0.47	2200	20000	
A 50 4_574.2	574.2	4.9	1500	0.86	2190	20000	2.4	1500	0.43	2200	20000	
A 50 4_631.2	631.2	4.4	1500	0.78	2200	20000	2.2	1500	0.39	2200	20000	
A 50 4_707.9	707.9	4.0	1500	0.70	2200	20000	2.0	1500	0.35	2200	20000	
A 50 4_778.2	778.2	3.6	1500	0.63	2200	20000	1.8	1500	0.32	2200	20000	

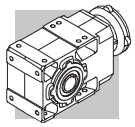

A 50 — 1500 Nm

	i	n_1 = 900 min^{-1}					n_1 = 500 min^{-1}					
		n_2 min^{-1}	M_{n2} Nm	P_{n1} kW	R_{n1} N	R_{n2} N	n_2 min^{-1}	M_{n2} Nm	P_{n1} kW	R_{n1} N	R_{n2} N	
A 50 2_7.7	7.7	116	770	10.0	3430	11700	65	900	6.5	3500	14300	
A 50 2_9.7	9.7	92	830	8.5	3490	12600	51	1000	5.7	3500	15300	
A 50 2_13.1	13.1	69	830	6.3	3500	14200	38	1000	4.2	3500	17300	
A 50 2_16.6	16.6	54	880	5.3	3500	15400	30	1000	3.4	3500	18900	
A 50 2_20.9	20.9	43	880	4.2	3500	16800	23.9	1000	2.7	3500	20000	
A 50 3_24.0	24.0	37	1500	6.5	3480	11300	20.8	1500	3.6	3500	15700	
A 50 3_26.4	26.4	34	1500	5.9	3500	12000	18.9	1500	3.3	3500	16500	
A 50 3_32.4	32.4	27.8	1500	4.8	3500	13400	15.4	1500	2.7	3500	18300	
A 50 3_35.6	35.6	25.3	1500	4.4	3500	14200	14.0	1500	2.4	3500	19200	
A 50 3_40.9	40.9	22.0	1500	3.8	3500	15300	12.2	1500	2.1	3500	20000	
A 50 3_45.0	45.0	20.0	1500	3.5	3500	16000	11.1	1500	1.9	3500	20000	
A 50 3_51.7	51.7	17.4	1500	3.0	3450	17200	9.7	1500	1.7	3500	20000	
A 50 3_56.8	56.8	15.8	1500	2.7	3500	18100	8.8	1500	1.5	3500	20000	
A 50 3_63.9	63.9	14.1	1500	2.4	3500	19200	7.8	1500	1.4	3500	20000	
A 50 3_70.2	70.2	12.8	1500	2.2	3500	20000	7.1	1500	1.2	3500	20000	
A 50 3_81.5	81.5	11.0	1500	1.9	3500	20000	6.1	1500	1.1	3500	20000	
A 50 3_89.5	89.5	10.1	1500	1.7	3500	20000	5.6	1500	0.96	3500	20000	
A 50 3_99.5	99.5	9.0	1500	1.6	3500	20000	5.0	1500	0.87	3500	20000	
A 50 3_109.4	109.4	8.2	1500	1.4	3500	20000	4.6	1500	0.79	3500	20000	
A 50 3_118.0	118.0	7.6	1500	1.3	3500	20000	4.2	1500	0.73	3500	20000	285
A 50 3_129.7	129.7	6.9	1500	1.2	3500	20000	3.9	1500	0.67	3500	20000	
A 50 3_140.6	140.6	6.4	1500	1.1	3500	20000	3.6	1500	0.61	3500	20000	
A 50 3_154.6	154.6	5.8	1500	1.0	3500	20000	3.2	1500	0.56	3500	20000	
A 50 3_173.4	173.4	5.2	1500	0.90	3500	20000	2.9	1500	0.50	3500	20000	
A 50 3_190.6	190.6	4.7	1500	0.82	3500	20000	2.6	1500	0.45	3500	20000	
A 50 4_211.0	211.0	4.3	1500	0.75	2200	20000	2.4	1500	0.42	2200	20000	
A 50 4_232.0	232.0	3.9	1500	0.68	2200	20000	2.2	1500	0.38	2200	20000	
A 50 4_260.9	260.9	3.4	1500	0.61	2200	20000	1.9	1500	0.34	2200	20000	
A 50 4_286.8	286.8	3.1	1500	0.55	2200	20000	1.7	1500	0.31	2200	20000	
A 50 4_332.6	332.6	2.7	1500	0.48	2200	20000	1.5	1500	0.27	2200	20000	
A 50 4_365.6	365.6	2.5	1500	0.43	2200	20000	1.4	1500	0.24	2200	20000	
A 50 4_406.4	406.4	2.2	1500	0.39	2200	20000	1.2	1500	0.22	2200	20000	
A 50 4_446.8	446.8	2.0	1500	0.36	2200	20000	1.1	1500	0.20	2200	20000	
A 50 4_481.6	481.6	1.9	1500	0.33	2200	20000	1.0	1500	0.18	2200	20000	
A 50 4_529.5	529.5	1.7	1500	0.30	2200	20000	0.94	1500	0.17	2200	20000	
A 50 4_574.2	574.2	1.6	1500	0.28	2200	20000	0.87	1500	0.15	2200	20000	
A 50 4_631.2	631.2	1.4	1500	0.25	2200	20000	0.79	1500	0.14	2200	20000	
A 50 4_707.9	707.9	1.3	1500	0.22	2200	20000	0.71	1500	0.12	2200	20000	
A 50 4_778.2	778.2	1.2	1500	0.20	2200	20000	0.64	1500	0.11	2200	20000	

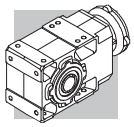

A 55 — 2000 Nm

	i	n_1 = 2800 min^{-1}					n_1 = 1400 min^{-1}					
		n_2 min^{-1}	M_{n2} Nm	P_{n1} kW	R_{n1} N	R_{n2} N	n_2 min^{-1}	M_{n2} Nm	P_{n1} kW	R_{n1} N	R_{n2} N	
A 55 2_4.9	4.9	571	760	48	1320	15100	286	900	28	2150	18700	
A 55 2_6.4	6.4	438	800	39	1950	16400	219	950	23	2860	20300	
A 55 2_8.5	8.5	329	800	30	2810	18000	165	950	17.5	3500	22200	
A 55 2_10.4	10.4	269	840	25	2900	19100	135	1000	15.1	3500	23600	
A 55 2_13.1	13.1	214	840	20	3230	20600	107	1000	11.9	3500	25500	
A 55 2_15.7	15.7	178	840	16.7	3440	21900	89	1000	9.9	3500	27000	
A 55 2_19.2	19.2	146	925	15.0	3160	23200	73	1100	8.9	3500	28600	
A 55 3_23.8	23.8	118	1600	22	2050	21000	59	1950	13.2	2640	26000	
A 55 3_29.9	29.9	94	1700	18.3	2110	22500	47	2000	10.8	2770	28200	
A 55 3_40.3	40.3	69	1850	14.8	2150	24800	35	2000	8.0	2930	30000	
A 55 3_51.0	51.0	55	2000	12.6	2170	26500	27.5	2000	6.3	3050	30000	
A 55 3_64.3	64.3	44	2000	10.0	2230	29000	21.8	2000	5.0	3110	30000	
A 55 3_79.5	79.5	35	2000	8.1	1040	30000	17.6	2000	4.1	2820	30000	
A 55 3_101.4	101.4	27.6	2000	6.4	1340	30000	13.8	2000	3.2	3130	30000	
A 55 3_123.9	123.9	22.6	2000	5.2	1450	30000	11.3	2000	2.6	3230	30000	289
A 55 3_132.7	132.7	21.1	2000	4.9	1450	30000	10.6	2000	2.4	3240	30000	
A 55 3_146.8	146.8	19.1	2000	4.4	1610	30000	9.5	2000	2.2	3290	30000	
A 55 3_160.4	160.4	17.5	2000	4.0	1660	30000	8.7	2000	2.0	3300	30000	
A 55 3_175.0	175.0	16.0	2000	3.7	1660	30000	8.0	2000	1.8	3300	30000	
A 55 3_194.2	194.2	14.4	2000	3.3	1710	30000	7.2	2000	1.7	3310	30000	
A 55 4_208.1	208.1	13.5	1600	2.5	1890	30000	6.7	1950	1.5	2200	30000	
A 55 4_262.6	262.6	10.7	1650	2.1	1980	30000	5.3	2000	1.3	2200	30000	
A 55 4_324.7	324.7	8.6	1750	1.8	2030	30000	4.3	2000	1.0	2200	30000	
A 55 4_414.0	414.0	6.8	1850	1.5	2080	30000	3.4	2000	0.80	2200	30000	
A 55 4_505.9	505.9	5.5	1900	1.2	2120	30000	2.8	2000	0.65	2200	30000	
A 55 4_542.0	542.0	5.2	1900	1.2	2140	30000	2.6	2000	0.61	2200	30000	
A 55 4_599.5	599.5	4.7	1950	1.1	2150	30000	2.3	2000	0.55	2200	30000	
A 55 4_655.1	655.1	4.3	1950	1.0	2180	30000	2.1	2000	0.50	2200	30000	
A 55 4_714.7	714.7	3.9	1950	0.90	2200	30000	2.0	2000	0.46	2200	30000	
A 55 4_793.0	793.0	3.5	2000	0.83	2200	30000	1.8	2000	0.42	2200	30000	

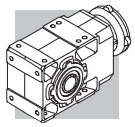

A 55 — 2000 Nm

	i	n_1 = 900 min^{-1}					n_1 = 500 min^{-1}					
		n_2 min^{-1}	M_{n2} Nm	P_{n1} kW	R_{n1} N	R_{n2} N	n_2 min^{-1}	M_{n2} Nm	P_{n1} kW	R_{n1} N	R_{n2} N	
A 55 2_4.9	4.9	184	1000	20	2850	21400	102	1160	13.1	3500	25600	
A 55 2_6.4	6.4	141	1060	16.6	3500	23200	78	1230	10.7	3500	27700	
A 55 2_8.5	8.5	106	1060	12.6	3500	25400	59	1230	8.1	3500	30000	
A 55 2_10.4	10.4	87	1120	10.8	3500	27000	48	1290	6.9	3500	30000	
A 55 2_13.1	13.1	69	1120	8.6	3500	29100	38	1290	5.5	3500	30000	
A 55 2_15.7	15.7	57	1120	7.2	3500	30000	32	1290	4.6	3500	30000	
A 55 2_19.2	19.2	47	1230	6.4	3500	30000	26.0	1420	4.1	3500	30000	
A 55 3_23.8	23.8	38	2000	8.7	3280	30000	21.0	2000	4.8	3500	30000	
A 55 3_29.9	29.9	30	2000	6.9	3450	30000	16.7	2000	3.8	3500	30000	
A 55 3_40.3	40.3	22.3	2000	5.1	3500	30000	12.4	2000	2.9	3500	30000	
A 55 3_51.0	51.0	17.6	2000	4.1	3500	30000	9.8	2000	2.3	3500	30000	
A 55 3_64.3	64.3	14.0	2000	3.2	3500	30000	7.8	2000	1.8	3500	30000	
A 55 3_79.5	79.5	11.3	2000	2.6	3500	30000	6.3	2000	1.4	3500	30000	
A 55 3_101.4	101.4	8.9	2000	2.0	3500	30000	4.9	2000	1.1	3500	30000	
A 55 3_123.9	123.9	7.3	2000	1.7	3500	30000	4.0	2000	0.93	3500	30000	289
A 55 3_132.7	132.7	6.8	2000	1.6	3500	30000	3.8	2000	0.87	3500	30000	
A 55 3_146.8	146.8	6.1	2000	1.4	3500	30000	3.4	2000	0.78	3500	30000	
A 55 3_160.4	160.4	5.6	2000	1.3	3500	30000	3.1	2000	0.72	3500	30000	
A 55 3_175.0	175.0	5.1	2000	1.2	3500	30000	2.9	2000	0.66	3500	30000	
A 55 3_194.2	194.2	4.6	2000	1.1	3500	30000	2.6	2000	0.59	3500	30000	
A 55 4_208.1	208.1	4.3	2000	1.0	2200	30000	2.4	2000	0.57	2200	30000	
A 55 4_262.6	262.6	3.4	2000	0.81	2200	30000	1.9	2000	0.45	2200	30000	
A 55 4_324.7	324.7	2.8	2000	0.65	2200	30000	1.5	2000	0.36	2200	30000	
A 55 4_414.0	414.0	2.2	2000	0.51	2200	30000	1.2	2000	0.28	2200	30000	
A 55 4_505.9	505.9	1.8	2000	0.42	2200	30000	1.0	2000	0.23	2200	30000	
A 55 4_542.0	542.0	1.7	2000	0.39	2200	30000	0.92	2000	0.22	2200	30000	
A 55 4_599.5	599.5	1.5	2000	0.35	2200	30000	0.83	2000	0.20	2200	30000	
A 55 4_655.1	655.1	1.4	2000	0.32	2200	30000	0.76	2000	0.18	2200	30000	
A 55 4_714.7	714.7	1.3	2000	0.30	2200	30000	0.70	2000	0.16	2200	30000	
A 55 4_793.0	793.0	1.1	2000	0.27	2200	30000	0.63	2000	0.15	2200	30000	

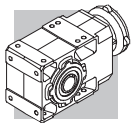

A 60 — 2800 Nm

	i	n_1 = 2800 min^{-1}					n_1 = 1400 min^{-1}					
		n_2 min^{-1}	M_{n2} Nm	P_{n1} kW	R_{n1} N	R_{n2} N	n_2 min^{-1}	M_{n2} Nm	P_{n1} kW	R_{n1} N	R_{n2} N	
A 60 2_7.9	7.9	356	950	38	2770	22500	178	1200	24	3400	27700	
A 60 2_10.3	10.3	271	950	29	2970	24600	136	1200	18.1	3740	30000	
A 60 2_12.7	12.7	220	1000	25	3020	26200	110	1250	15.3	3810	30000	
A 60 2_16.7	16.7	167	1050	19.6	3080	28600	84	1300	12.1	3910	30000	
A 60 2_20.6	20.6	136	1100	16.7	3100	30000	68	1400	10.6	3890	30000	
A 60 3_25.7	25.7	109	2760	35	2380	26900	54	2800	17.5	3800	30000	
A 60 3_27.9	27.9	101	2800	32	2780	27700	50	2800	16.2	3930	30000	
A 60 3_31.7	31.7	88	2800	29	2790	29000	44	2800	14.2	3940	30000	
A 60 3_34.3	34.3	82	2800	26	2920	30000	41	2800	13.2	4060	30000	
A 60 3_41.7	41.7	67	2800	22	2940	30000	34	2800	10.8	4090	30000	
A 60 3_45.2	45.2	62	2800	20	3060	30000	31	2800	10.0	4200	30000	
A 60 3_51.3	51.3	55	2800	17.6	3030	30000	27.3	2800	8.8	4180	30000	
A 60 3_55.6	55.6	50	2800	16.2	3140	30000	25.2	2800	8.1	4280	30000	
A 60 3_65.0	65.0	43	2800	13.9	3110	30000	21.5	2800	6.9	4260	30000	
A 60 3_70.4	70.4	40	2800	12.8	3210	30000	19.9	2800	6.4	4360	30000	
A 60 3_79.7	79.7	35	2800	11.3	3160	30000	17.6	2800	5.7	4310	30000	
A 60 3_86.4	86.4	32	2800	10.4	3260	30000	16.2	2800	5.2	4410	30000	
A 60 3_99.5	99.5	28.1	2800	9.1	3210	30000	14.1	2800	4.5	4360	30000	
A 60 3_107.8	107.8	26.0	2800	8.4	3300	30000	13.0	2800	4.2	4450	30000	
A 60 3_123.0	123.0	22.8	2800	7.3	3250	30000	11.4	2800	3.7	4400	30000	293
A 60 3_133.3	133.3	21.0	2800	6.8	3340	30000	10.5	2800	3.4	4490	30000	
A 60 3_144.0	144.0	19.4	2800	6.3	3280	30000	9.7	2800	3.1	4420	30000	
A 60 3_156.0	156.0	17.9	2800	5.8	3360	30000	9.0	2800	2.9	4510	30000	
A 60 3_171.5	171.5	16.3	2800	5.3	3290	30000	8.2	2800	2.6	4430	30000	
A 60 3_185.8	185.8	15.1	2800	4.9	3370	30000	7.5	2800	2.4	4520	30000	
A 60 4_208.7	208.7	13.4	2800	4.4	2720	30000	6.7	2800	2.2	3500	30000	
A 60 4_226.1	226.1	12.4	2800	4.1	2770	30000	6.2	2800	2.0	3500	30000	
A 60 4_264.3	264.3	10.6	2800	3.5	2860	30000	5.3	2800	1.7	3500	30000	
A 60 4_286.3	286.3	9.8	2800	3.2	2900	30000	4.9	2800	1.6	3500	30000	
A 60 4_324.2	324.2	8.6	2800	2.8	2960	30000	4.3	2800	1.4	3500	30000	
A 60 4_351.2	351.2	8.0	2800	2.6	2990	30000	4.0	2800	1.3	3500	30000	
A 60 4_404.7	404.7	6.9	2800	2.3	3050	30000	3.5	2800	1.1	3500	30000	
A 60 4_438.4	438.4	6.4	2800	2.1	3070	30000	3.2	2800	1.1	3500	30000	
A 60 4_500.3	500.3	5.6	2800	1.8	3110	30000	2.8	2800	0.92	3500	30000	
A 60 4_542.0	542.0	5.2	2800	1.7	3140	30000	2.6	2800	0.85	3500	30000	
A 60 4_585.8	585.8	4.8	2800	1.6	3150	30000	2.4	2800	0.79	3500	30000	
A 60 4_634.6	634.6	4.4	2800	1.5	3170	30000	2.2	2800	0.73	3500	30000	
A 60 4_697.3	697.3	4.0	2800	1.3	3190	30000	2.0	2800	0.66	3500	30000	
A 60 4_755.4	755.4	3.7	2800	1.2	3210	30000	1.9	2800	0.61	3500	30000	

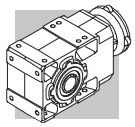

A 60 — 2800 Nm

	i	n_1 = 900 min^{-1}					n_1 = 500 min^{-1}					
		n_2 min^{-1}	M_{n2} Nm	P_{n1} kW	R_{n1} N	R_{n2} N	n_2 min^{-1}	M_{n2} Nm	P_{n1} kW	R_{n1} N	R_{n2} N	
A 60 2_7.9	7.9	114	1300	16.6	4190	30000	64	1550	11.0	4700	30000	
A 60 2_10.3	10.3	87	1300	12.6	4470	30000	48	1550	8.4	4700	30000	
A 60 2_12.7	12.7	71	1400	11.0	4490	30000	39	1700	7.5	4700	30000	
A 60 2_16.7	16.7	54	1450	8.7	4610	30000	29.9	1700	5.7	4700	30000	
A 60 2_20.6	20.6	44	1550	7.5	4600	30000	24.3	1800	4.9	4700	30000	
A 60 3_25.7	25.7	35	2800	11.3	4680	30000	19.4	2800	6.3	4700	30000	
A 60 3_27.9	27.9	32	2800	10.4	4700	30000	18.0	2800	5.8	4700	30000	
A 60 3_31.7	31.7	28.4	2800	9.2	4700	30000	15.8	2800	5.1	4700	30000	
A 60 3_34.3	34.3	26.2	2800	8.5	4700	30000	14.6	2800	4.7	4700	30000	
A 60 3_41.7	41.7	21.6	2800	7.0	4700	30000	12.0	2800	3.9	4700	30000	
A 60 3_45.2	45.2	19.9	2800	6.4	4700	30000	11.1	2800	3.6	4700	30000	
A 60 3_51.3	51.3	17.5	2800	5.6	4700	30000	9.7	2800	3.1	4700	30000	
A 60 3_55.6	55.6	16.2	2800	5.2	4700	30000	9.0	2800	2.9	4700	30000	
A 60 3_65.0	65.0	13.8	2800	4.5	4700	30000	7.7	2800	2.5	4700	30000	
A 60 3_70.4	70.4	12.8	2800	4.1	4700	30000	7.1	2800	2.3	4700	30000	
A 60 3_79.7	79.7	11.3	2800	3.6	4700	30000	6.3	2800	2.0	4700	30000	
A 60 3_86.4	86.4	10.4	2800	3.4	4700	30000	5.8	2800	1.9	4700	30000	
A 60 3_99.5	99.5	9.0	2800	2.9	4700	30000	5.0	2800	1.6	4700	30000	
A 60 3_107.8	107.8	8.3	2800	2.7	4700	30000	4.6	2800	1.5	4700	30000	
A 60 3_123.0	123.0	7.3	2800	2.4	4700	30000	4.1	2800	1.3	4700	30000	293
A 60 3_133.3	133.3	6.8	2800	2.2	4700	30000	3.8	2800	1.2	4700	30000	
A 60 3_144.0	144.0	6.2	2800	2.0	4700	30000	3.5	2800	1.1	4700	30000	
A 60 3_156.0	156.0	5.8	2800	1.9	4700	30000	3.2	2800	1.0	4700	30000	
A 60 3_171.5	171.5	5.2	2800	1.7	4700	30000	2.9	2800	0.94	4700	30000	
A 60 3_185.8	185.8	4.8	2800	1.6	4700	30000	2.7	2800	0.87	4700	30000	
A 60 4_208.7	208.7	4.3	2800	1.4	3500	30000	2.4	2800	0.79	3500	30000	
A 60 4_226.1	226.1	4.0	2800	1.3	3500	30000	2.2	2800	0.73	3500	30000	
A 60 4_264.3	264.3	3.4	2800	1.1	3500	30000	1.9	2800	0.62	3500	30000	
A 60 4_286.3	286.3	3.1	2800	1.0	3500	30000	1.7	2800	0.58	3500	30000	
A 60 4_324.2	324.2	2.8	2800	0.91	3500	30000	1.5	2800	0.51	3500	30000	
A 60 4_351.2	351.2	2.6	2800	0.84	3500	30000	1.4	2800	0.47	3500	30000	
A 60 4_404.7	404.7	2.2	2800	0.73	3500	30000	1.2	2800	0.41	3500	30000	
A 60 4_438.4	438.4	2.1	2800	0.68	3500	30000	1.1	2800	0.38	3500	30000	
A 60 4_500.3	500.3	1.8	2800	0.59	3500	30000	1.0	2800	0.33	3500	30000	
A 60 4_542.0	542.0	1.7	2800	0.55	3500	30000	0.92	2800	0.30	3500	30000	
A 60 4_585.8	585.8	1.5	2800	0.51	3500	30000	0.85	2800	0.28	3500	30000	
A 60 4_634.6	634.6	1.4	2800	0.47	3500	30000	0.79	2800	0.26	3500	30000	
A 60 4_697.3	697.3	1.3	2800	0.43	3500	30000	0.72	2800	0.24	3500	30000	
A 60 4_755.4	755.4	1.2	2800	0.39	3500	30000	0.66	2800	0.22	3500	30000	

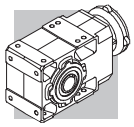

A 70 — 5000 Nm

	i	n_1 = 2800 min^{-1}					n_1 = 1400 min^{-1}					
		n_2 min^{-1}	M_{n2} Nm	P_{n1} kW	R_{n1} N	R_{n2} N	n_2 min^{-1}	M_{n2} Nm	P_{n1} kW	R_{n1} N	R_{n2} N	
A 70 3_9.4	9.4	297	2300	79	1900	25900	148	2800	48	2550	31900	
A 70 3_10.2	10.2	274	2400	76	2480	26400	137	3200	50	1480	31900	
A 70 3_12.1	12.1	232	2400	64	2420	28000	116	3200	43	1400	33900	
A 70 3_13.1	13.1	214	2600	64	2420	28400	107	3350	41	2100	34600	
A 70 3_15.4	15.4	182	2700	56	2100	29900	91	3350	35	2430	36700	
A 70 3_16.7	16.7	168	2850	55	2500	30400	84	3600	35	2590	37200	
A 70 3_19.7	19.7	142	2900	48	2030	32100	71	3700	30	1790	39300	
A 70 3_21.3	21.3	131	3000	45	2750	32900	66	4000	30	1830	39800	
A 70 3_23.5	23.5	119	3500	48	4930	32900	60	4300	30	6250	40500	
A 70 3_27.8	27.8	101	3450	40	4960	35100	50	4200	24	6300	43300	
A 70 3_30.1	30.1	93	3700	40	4970	35600	47	4550	24	6300	43900	
A 70 3_35.4	35.4	79	3650	33	5040	37900	40	4500	21	6370	46600	
A 70 3_38.4	38.4	73	3950	33	5040	38400	36	4850	20	6380	47300	
A 70 3_45.2	45.2	62	3900	28	5050	40800	31	4800	17.1	6400	50000	
A 70 3_49.0	49.0	57	4250	28	5050	41300	28.6	5000	16.4	6450	50000	
A 70 3_53.2	53.2	53	4100	25	5030	42900	26.3	5000	15.1	6380	50000	
A 70 3_57.7	57.7	49	4450	25	5030	43400	24.3	5000	14.0	6490	50000	
A 70 3_66.9	66.9	42	4350	21	5050	46000	20.9	5000	12.0	6480	50000	
A 70 3_72.5	72.5	39	4750	21	5040	46500	19.3	5000	11.1	6580	50000	
A 70 3_79.3	79.3	35	4600	18.7	5020	48400	17.6	5000	10.2	6520	50000	
A 70 3_85.9	85.9	33	4950	18.6	5030	49100	16.3	5000	9.4	6620	50000	
A 70 3_96.2	96.2	29.1	4850	16.2	5000	50000	14.6	5000	8.4	6570	50000	
A 70 3_104.2	104.2	26.9	5000	15.5	5060	50000	13.4	5000	7.7	6660	50000	
A 70 3_120.6	120.6	23.2	5000	13.4	5010	50000	11.6	5000	6.7	6610	50000	
A 70 3_130.7	130.7	21.4	5000	12.3	5100	50000	10.7	5000	6.2	6690	50000	297
A 70 3_141.9	141.9	19.7	5000	11.4	5040	50000	9.9	5000	5.7	6640	50000	
A 70 3_153.7	153.7	18.2	3300	6.9	5410	50000	9.1	4050	4.2	6920	50000	
A 70 4_169.8	169.8	16.5	5000	9.7	1130	50000	8.2	5000	4.9	2520	50000	
A 70 4_183.9	183.9	15.2	5000	9.0	1450	50000	7.6	5000	4.5	2670	50000	
A 70 4_220.3	220.3	12.7	5000	7.5	1560	50000	6.4	5000	3.7	2710	50000	
A 70 4_238.6	238.6	11.7	5000	6.9	1860	50000	5.9	5000	3.5	2770	50000	
A 70 4_292.0	292.0	9.6	5000	5.6	1900	50000	4.8	5000	2.8	2790	50000	
A 70 4_316.4	316.4	8.9	5000	5.2	2110	50000	4.4	5000	2.6	2850	50000	
A 70 4_369.4	369.4	7.6	5000	4.5	2110	50000	3.8	5000	2.2	2840	50000	
A 70 4_400.2	400.2	7.0	5000	4.1	2160	50000	3.5	5000	2.1	2900	50000	
A 70 4_475.8	475.8	5.9	5000	3.5	2150	50000	2.9	5000	1.7	2890	50000	
A 70 4_515.4	515.4	5.4	5000	3.2	2200	50000	2.7	5000	1.6	2940	50000	
A 70 4_595.0	595.0	4.7	5000	2.8	2190	50000	2.4	5000	1.4	2920	50000	
A 70 4_644.6	644.6	4.3	5000	2.6	2230	50000	2.2	5000	1.3	2970	50000	
A 70 4_705.1	705.1	4.0	5000	2.3	2200	50000	2.0	5000	1.2	2940	50000	
A 70 4_763.9	763.9	3.7	5000	2.2	2250	50000	1.8	5000	1.1	2990	50000	
A 70 4_855.3	855.3	3.3	5000	1.9	2220	50000	1.6	5000	0.96	2960	50000	
A 70 4_926.5	926.5	3.0	5000	1.8	2270	50000	1.5	5000	0.89	3000	50000	
A 70 4_1072	1072	2.6	5000	1.5	2240	50000	1.3	5000	0.77	2970	50000	
A 70 4_1161	1161	2.4	5000	1.4	2280	50000	1.2	5000	0.71	3020	50000	
A 70 4_1242	1242	2.3	5000	1.3	2250	50000	1.1	5000	0.66	2980	50000	
A 70 4_1346	1346	2.1	5000	1.2	2290	50000	1.0	5000	0.61	3030	50000	
A 70 4_1583	1583	1.8	5000	1.0	2260	50000	0.88	5000	0.52	2990	50000	
A 70 4_1715	1715	1.6	5000	0.96	2300	50000	0.82	5000	0.48	3040	50000	

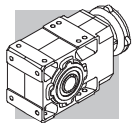

A 70 — 5000 Nm

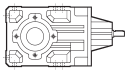

	i	n_1 = 900 min^{-1}					n_1 = 500 min^{-1}					
		n_2	M_{n2}	P_{n1}	R_{n1}	R_{n2}	n_2	M_{n2}	P_{n1}	R_{n1}	R_{n2}	
		min^{-1}	Nm	kW	N	N	min^{-1}	Nm	kW	N	N	
A 70 3_9.4	9.4	95	3000	33	4290	36900	53	3000	18.3	7000	45400	
A 70 3_10.2	10.2	88	3250	33	4290	37400	49	3250	18.3	7000	46100	
A 70 3_12.1	12.1	75	3650	31	1620	38700	41	3650	17.4	6470	47900	
A 70 3_13.1	13.1	69	3950	31	1650	39200	38	3950	17.4	6500	48600	
A 70 3_15.4	15.4	58	3700	25	3510	42200	32	3700	13.8	7000	50000	
A 70 3_16.7	16.7	54	4000	25	3560	42800	30	4000	13.8	7000	50000	
A 70 3_19.7	19.7	46	3700	19.5	4910	46100	25.4	3700	10.8	7000	50000	
A 70 3_21.3	21.3	42	4000	19.4	4950	46800	23.5	4000	10.8	7000	50000	
A 70 3_23.5	23.5	38	4900	21.6	7000	46300	21.3	5000	12.2	7000	50000	
A 70 3_27.8	27.8	32	4800	17.9	7000	49400	18.0	5000	10.4	7000	50000	
A 70 3_30.1	30.1	29.9	5000	17.2	7000	50000	16.6	5000	9.6	7000	50000	
A 70 3_35.4	35.4	25.4	5000	14.6	7000	50000	14.1	5000	8.1	7000	50000	
A 70 3_38.4	38.4	23.4	5000	13.5	7000	50000	13.0	5000	7.5	7000	50000	
A 70 3_45.2	45.2	19.9	5000	11.4	7000	50000	11.1	5000	6.4	7000	50000	
A 70 3_49.0	49.0	18.4	5000	10.6	7000	50000	10.2	5000	5.9	7000	50000	
A 70 3_53.2	53.2	16.9	5000	9.7	7000	50000	9.4	5000	5.4	7000	50000	
A 70 3_57.7	57.7	15.6	5000	9.0	7000	50000	8.7	5000	5.0	7000	50000	
A 70 3_66.9	66.9	13.4	5000	7.7	7000	50000	7.5	5000	4.3	7000	50000	
A 70 3_72.5	72.5	12.4	5000	7.1	7000	50000	6.9	5000	4.0	7000	50000	
A 70 3_79.3	79.3	11.3	5000	6.5	7000	50000	6.3	5000	3.6	7000	50000	
A 70 3_85.9	85.9	10.5	5000	6.0	7000	50000	5.8	5000	3.3	7000	50000	
A 70 3_96.2	96.2	9.4	5000	5.4	7000	50000	5.2	5000	3.0	7000	50000	
A 70 3_104.2	104.2	8.6	5000	5.0	7000	50000	4.8	5000	2.8	7000	50000	
A 70 3_120.6	120.6	7.5	5000	4.3	7000	50000	4.1	5000	2.4	7000	50000	
A 70 3_130.7	130.7	6.9	5000	4.0	7000	50000	3.8	5000	2.2	7000	50000	297
A 70 3_141.9	141.9	6.3	5000	3.7	7000	50000	3.5	5000	2.0	7000	50000	
A 70 3_153.7	153.7	5.9	4600	3.1	7000	50000	3.3	5000	1.9	7000	50000	
A 70 4_169.8	169.8	5.3	5000	3.1	3170	50000	2.9	5000	1.7	3500	50000	
A 70 4_183.9	183.9	4.9	5000	2.9	3240	50000	2.7	5000	1.6	3500	50000	
A 70 4_220.3	220.3	4.1	5000	2.4	3270	50000	2.3	5000	1.3	3500	50000	
A 70 4_238.6	238.6	3.8	5000	2.2	3340	50000	2.1	5000	1.2	3500	50000	
A 70 4_292.0	292.0	3.1	5000	1.8	3350	50000	1.7	5000	1.0	3500	50000	
A 70 4_316.4	316.4	2.8	5000	1.7	3410	50000	1.6	5000	0.93	3500	50000	
A 70 4_369.4	369.4	2.4	5000	1.4	3410	50000	1.4	5000	0.80	3500	50000	
A 70 4_400.2	400.2	2.2	5000	1.3	3460	50000	1.2	5000	0.74	3500	50000	
A 70 4_475.8	475.8	1.9	5000	1.1	3450	50000	1.1	5000	0.62	3500	50000	
A 70 4_515.4	515.4	1.7	5000	1.0	3500	50000	0.97	5000	0.57	3500	50000	
A 70 4_595.0	595.0	1.5	5000	0.89	3480	50000	0.84	5000	0.49	3500	50000	
A 70 4_644.6	644.6	1.4	5000	0.82	3500	50000	0.78	5000	0.46	3500	50000	
A 70 4_705.1	705.1	1.3	5000	0.75	3500	50000	0.71	5000	0.42	3500	50000	
A 70 4_763.9	763.9	1.2	5000	0.69	3500	50000	0.65	5000	0.39	3500	50000	
A 70 4_855.3	855.3	1.1	5000	0.62	3500	50000	0.58	5000	0.34	3500	50000	
A 70 4_926.5	926.5	0.97	5000	0.57	3500	50000	0.54	5000	0.32	3500	50000	
A 70 4_1072	1072	0.84	5000	0.49	3500	50000	0.47	5000	0.27	3500	50000	
A 70 4_1161	1161	0.77	5000	0.46	3500	50000	0.43	5000	0.25	3500	50000	
A 70 4_1242	1242	0.72	5000	0.43	3500	50000	0.40	5000	0.24	3500	50000	
A 70 4_1346	1346	0.67	5000	0.39	3500	50000	0.37	5000	0.22	3500	50000	
A 70 4_1583	1583	0.57	5000	0.33	3500	50000	0.32	5000	0.19	3500	50000	
A 70 4_1715	1715	0.52	5000	0.31	3500	50000	0.29	5000	0.17	3500	50000	

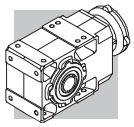

A 80 — 8000 Nm

	i	n_1 = 2800 min^{-1}					n_1 = 1400 min^{-1}					
		n_2 min^{-1}	M_{n2} Nm	P_{n1} kW	R_{n1} N	R_{n2} N	n_2 min^{-1}	M_{n2} Nm	P_{n1} kW	R_{n1} N	R_{n2} N	
A 80 3_9.8	9.8	285	3100	102	—	26300	142	3900	64	—	32100	
A 80 3_10.7	10.7	263	3450	104	—	26300	131	4300	65	—	32300	
A 80 3_12.3	12.3	228	3450	91	—	27700	114	4300	56	—	34000	
A 80 3_13.3	13.3	211	3450	84	1150	28700	105	4300	52	1150	35200	
A 80 3_15.5	15.5	181	3300	69	1560	30600	91	4100	43	1730	37600	
A 80 3_16.7	16.7	167	3600	69	1440	30900	84	4500	43	1460	37900	
A 80 3_19.3	19.3	145	3500	58	1870	32800	72	4400	37	1880	40200	
A 80 3_20.9	20.9	134	3840	59	1670	33100	67	4800	37	1740	40600	
A 80 3_22.6	22.6	124	5050	72	4500	31200	62	6250	45	5830	38400	
A 80 3_24.5	24.5	114	5500	72	4470	31300	57	6750	44	5840	38600	
A 80 3_28.2	28.2	99	5350	61	4700	33500	50	6600	38	5960	41200	
A 80 3_30.6	30.6	92	5250	55	4840	34900	46	6450	34	6140	43000	
A 80 3_35.5	35.5	79	5700	52	4700	36000	39	7000	32	6000	44300	
A 80 3_38.5	38.5	73	6150	51	4720	36200	36	7600	32	6000	44500	
A 80 3_44.5	44.5	63	6050	44	4790	38600	31	7450	27	6070	47500	
A 80 3_48.2	48.2	58	6550	44	4790	38800	29.1	8000	27	6090	47900	
A 80 3_55.2	55.2	51	6400	37	4710	41300	25.4	7900	23	6050	50800	
A 80 3_59.8	59.8	47	6950	37	4690	41500	23.4	8000	22	6170	52300	
A 80 3_66.8	66.8	42	6800	33	4670	43700	21.0	8000	19.3	6150	54600	
A 80 3_72.4	72.4	39	7350	33	4680	44000	19.3	8000	17.8	6280	56500	
A 80 3_82.3	82.3	34	7200	28	4570	46600	17.0	8000	15.7	6230	59300	
A 80 3_89.2	89.2	31	7800	28	4570	46900	15.7	8000	14.5	6350	61400	
A 80 3_96.0	96.0	29.2	7500	25	4410	48900	14.6	8000	13.4	6260	63000	
A 80 3_104.0	104.0	26.9	8000	25	4500	49500	13.5	8000	12.4	6380	65000	
A 80 3_116.0	116.0	24.1	7950	22	4230	51700	12.1	8000	11.1	6300	65000	300
A 80 3_125.6	125.6	22.3	8000	21	4630	53400	11.1	8000	10.3	6420	65000	
A 80 3_144.7	144.7	19.3	8000	17.8	4320	56400	9.7	8000	8.9	6350	65000	
A 80 3_156.8	156.8	17.9	8000	16.4	4750	58300	8.9	8000	8.2	6460	65000	
A 80 4_171.3	171.3	16.3	8000	15.4	—	65000	8.2	8000	7.7	1230	65000	
A 80 4_214.7	214.7	13.0	8000	12.3	—	65000	6.5	8000	6.1	1400	65000	
A 80 4_232.6	232.6	12.0	8000	11.3	—	65000	6.0	8000	5.7	1810	65000	
A 80 4_277.3	277.3	10.1	8000	9.5	540	65000	5.0	8000	4.8	1930	65000	
A 80 4_300.4	300.4	9.3	8000	8.8	900	65000	4.7	8000	4.4	2290	65000	
A 80 4_354.0	354.0	7.9	8000	7.4	800	65000	4.0	8000	3.7	2190	65000	
A 80 4_383.5	383.5	7.3	8000	6.9	1140	65000	3.7	8000	3.4	2530	65000	
A 80 4_442.1	442.1	6.3	8000	6.0	1040	65000	3.2	8000	3.0	2430	65000	
A 80 4_478.9	478.9	5.8	8000	5.5	1370	65000	2.9	8000	2.8	2670	65000	
A 80 4_560.5	560.5	5.0	8000	4.7	1240	65000	2.5	8000	2.4	2630	65000	
A 80 4_607.2	607.2	4.6	8000	4.3	1550	65000	2.3	8000	2.2	2720	65000	
A 80 4_703.5	703.5	4.0	8000	3.7	1440	65000	2.0	8000	1.9	2690	65000	
A 80 4_762.1	762.1	3.7	8000	3.5	1730	65000	1.8	8000	1.7	2760	65000	
A 80 4_829.5	829.5	3.4	8000	3.2	1530	65000	1.7	8000	1.6	2720	65000	
A 80 4_898.7	898.7	3.1	8000	2.9	1820	65000	1.6	8000	1.5	2780	65000	
A 80 4_1001	1001	2.8	8000	2.6	1620	65000	1.4	8000	1.3	2740	65000	
A 80 4_1085	1085	2.6	8000	2.4	1900	65000	1.3	8000	1.2	2800	65000	
A 80 4_1237	1237	2.3	8000	2.1	1660	65000	1.1	8000	1.1	2750	65000	
A 80 4_1340	1340	2.1	8000	2.0	1940	65000	1.0	8000	0.98	2810	65000	
A 80 4_1438	1438	1.9	8000	1.8	1730	65000	0.97	8000	0.92	2770	65000	
A 80 4_1558	1558	1.8	8000	1.7	2000	65000	0.90	8000	0.85	2830	65000	

(—) 请联系我们的技术部门并告知径向负载信息 (转向, 力的方向, 位置)

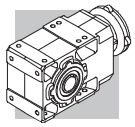

A 80 — 8000 Nm

	i	n_1 = 900 min^{-1}					n_1 = 500 min^{-1}					
		n_2 min^{-1}	M_{n2} Nm	P_{n1} kW	R_{n1} N	R_{n2} N	n_2 min^{-1}	M_{n2} Nm	P_{n1} kW	R_{n1} N	R_{n2} N	
A 80 3_9.8	9.8	92	4450	47	—	36700	51	5300	31	—	43800	
A 80 3_10.7	10.7	84	4900	48	—	36900	47	5850	32	—	44000	
A 80 3_12.3	12.3	73	4900	41	—	38900	41	5850	27	—	46400	
A 80 3_13.3	13.3	68	4900	38	1360	40200	38	5850	25	1600	47900	
A 80 3_15.5	15.5	58	4650	31	2130	43000	32	5550	21	2530	51300	
A 80 3_16.7	16.7	54	5100	32	1840	43400	29.9	6100	21	2120	51700	
A 80 3_19.3	19.3	47	5000	27	2260	46000	25.9	6000	17.9	2530	54800	
A 80 3_20.9	20.9	43	5470	27	2030	46400	23.9	6500	17.9	2530	55400	
A 80 3_22.6	22.6	40	7100	33	6810	43900	22.1	8000	20.4	7000	53400	
A 80 3_24.5	24.5	37	7700	33	6800	44100	20.4	8000	18.8	7000	55300	
A 80 3_28.2	28.2	32	7550	28	6940	47000	17.7	8000	16.3	7000	58400	
A 80 3_30.6	30.6	29.4	7400	25	7000	49000	16.4	8000	15.1	7000	60400	
A 80 3_35.5	35.5	25.3	8000	23	6980	50600	14.1	8000	13.0	7000	63900	
A 80 3_38.5	38.5	23.4	8000	22	7000	52400	13.0	8000	12.0	7000	65000	
A 80 3_44.5	44.5	20.2	8000	18.6	7000	55400	11.2	8000	10.3	7000	65000	
A 80 3_48.2	48.2	18.7	8000	17.2	7000	57300	10.4	8000	9.6	7000	65000	
A 80 3_55.2	55.2	16.3	8000	15.0	7000	60300	9.1	8000	8.3	7000	65000	
A 80 3_59.8	59.8	15.1	8000	13.9	7000	62300	8.4	8000	7.7	7000	65000	
A 80 3_66.8	66.8	13.5	8000	12.4	7000	65000	7.5	8000	6.9	7000	65000	
A 80 3_72.4	72.4	12.4	8000	11.4	7000	65000	6.9	8000	6.4	7000	65000	
A 80 3_82.3	82.3	10.9	8000	10.1	7000	65000	6.1	8000	5.6	7000	65000	
A 80 3_89.2	89.2	10.1	8000	9.3	7000	65000	5.6	8000	5.2	7000	65000	
A 80 3_96.0	96.0	9.4	8000	8.6	7000	65000	5.2	8000	4.8	7000	65000	
A 80 3_104.0	104.0	8.7	8000	8.0	7000	65000	4.8	8000	4.4	7000	65000	
A 80 3_116.0	116.0	7.8	8000	7.1	7000	65000	4.3	8000	4.0	7000	65000	300
A 80 3_125.6	125.6	7.2	8000	6.6	7000	65000	4.0	8000	3.7	7000	65000	
A 80 3_144.7	144.7	6.2	8000	5.7	7000	65000	3.5	8000	3.2	7000	65000	
A 80 3_156.8	156.8	5.7	8000	5.3	7000	65000	3.2	8000	2.9	7000	65000	
A 80 4_171.3	171.3	5.3	8000	4.9	2300	65000	2.9	8000	2.7	3500	65000	
A 80 4_214.7	214.7	4.2	8000	3.9	2470	65000	2.3	8000	2.2	3500	65000	
A 80 4_232.6	232.6	3.9	8000	3.6	2870	65000	2.1	8000	2.0	3500	65000	
A 80 4_277.3	277.3	3.2	8000	3.1	3000	65000	1.8	8000	1.7	3500	65000	
A 80 4_300.4	300.4	3.0	8000	2.8	3120	65000	1.7	8000	1.6	3500	65000	
A 80 4_354.0	354.0	2.5	8000	2.4	3100	65000	1.4	8000	1.3	3500	65000	
A 80 4_383.5	383.5	2.3	8000	2.2	3180	65000	1.3	8000	1.2	3500	65000	
A 80 4_442.1	442.1	2.0	8000	1.9	3160	65000	1.1	8000	1.1	3500	65000	
A 80 4_478.9	478.9	1.9	8000	1.8	3230	65000	1.0	8000	0.98	3500	65000	
A 80 4_560.5	560.5	1.6	8000	1.5	3210	65000	0.89	8000	0.84	3500	65000	
A 80 4_607.2	607.2	1.5	8000	1.4	3280	65000	0.82	8000	0.78	3500	65000	
A 80 4_703.5	703.5	1.3	8000	1.2	3260	65000	0.71	8000	0.67	3500	65000	
A 80 4_762.1	762.1	1.2	8000	1.1	3320	65000	0.66	8000	0.62	3500	65000	
A 80 4_829.5	829.5	1.1	8000	1.0	3280	65000	0.60	8000	0.57	3500	65000	
A 80 4_898.7	898.7	1.0	8000	0.94	3340	65000	0.56	8000	0.52	3500	65000	
A 80 4_1001	1001	0.90	8000	0.85	3300	65000	0.50	8000	0.47	3500	65000	
A 80 4_1085	1085	0.83	8000	0.78	3360	65000	0.46	8000	0.43	3500	65000	
A 80 4_1237	1237	0.73	8000	0.68	3310	65000	0.40	8000	0.38	3500	65000	
A 80 4_1340	1340	0.67	8000	0.63	3370	65000	0.37	8000	0.35	3500	65000	
A 80 4_1438	1438	0.63	8000	0.59	3330	65000	0.35	8000	0.33	3500	65000	
A 80 4_1558	1558	0.58	8000	0.54	3390	65000	0.32	8000	0.30	3500	65000	

(—) 请联系我们的技术部门并告知径向负载信息 (转向, 力的方向, 位置)

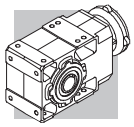

A 90 — 14000 Nm

	i	n_1 = 2800 min^{-1}					n_1 = 1400 min^{-1}					
		n_2 min^{-1}	M_{n2} Nm	P_{n1} kW	R_{n1} N	R_{n2} N	n_2 min^{-1}	M_{n2} Nm	P_{n1} kW	R_{n1} N	R_{n2} N	
A 90 3_9.7	9.7	289	7800	260	2440	27600	145	9050	151	5520	35000	
A 90 3_10.5	10.5	267	8350	257	2620	27700	134	9800	151	5530	34900	
A 90 3_12.6	12.6	221	8500	217	2700	29800	111	10450	133	4790	36700	
A 90 3_13.7	13.7	204	8050	189	4670	31800	102	11150	131	5060	36900	
A 90 3_15.6	15.6	180	8900	184	3240	32000	90	10950	113	5410	39400	
A 90 3_16.9	16.9	166	9650	184	3230	31900	83	11850	113	5440	39300	
A 90 3_19.4	19.4	144	9400	156	3160	34300	72	11550	96	5350	42300	
A 90 3_21.0	21.0	133	10150	156	3210	34300	67	12400	95	5510	42400	
A 90 3_22.3	22.3	126	9850	143	9660	35700	63	12150	88	12200	43900	
A 90 3_24.1	24.1	116	10700	143	9660	35500	58	13150	88	12200	43800	
A 90 3_29.1	29.1	96	10550	117	9800	38900	48	13000	72	12400	47900	
A 90 3_31.5	31.5	89	11450	117	9800	38800	44	14000	72	12400	47900	
A 90 3_35.8	35.8	78	11150	100	9910	41600	39	13750	62	12500	51100	
A 90 3_38.8	38.8	72	12100	100	9900	41500	36	14000	58	12700	52700	
A 90 3_44.6	44.6	63	11800	85	9920	44600	31	14000	51	12700	56000	
A 90 3_48.3	48.3	58	12800	85	9920	44500	29.0	14000	47	12800	58000	
A 90 3_55.0	55.0	51	12550	73	9960	47500	25.4	14000	41	12800	61400	
A 90 3_59.6	59.6	47	13550	73	9970	47500	23.5	14000	38	13000	63500	
A 90 3_68.8	68.8	41	13350	63	9960	50900	20.4	14000	33	13000	67400	
A 90 3_74.5	74.5	38	14000	61	10000	51700	18.8	14000	30	13100	69700	
A 90 3_80.4	80.4	35	13900	56	9920	53500	17.4	14000	28	13000	71900	
A 90 3_87.1	87.1	32	14000	52	10100	55500	16.1	14000	26	13200	74300	
A 90 3_98.6	98.6	28.4	14000	46	9990	58500	14.2	14000	23	13100	75000	
A 90 3_106.8	106.8	26.2	14000	42	10100	60600	13.1	14000	21	13300	75000	
A 90 3_116.9	116.9	24.0	14000	39	10100	63000	12.0	14000	19.3	13200	75000	
A 90 3_126.6	126.6	22.1	10650	27	10600	71400	11.1	13150	16.7	13400	75000	303
A 90 3_139.4	139.4	20.1	10350	24	10600	74500	10.0	12750	14.7	13400	75000	
A 90 3_151.0	151.0	18.5	11200	24	10600	75000	9.3	13800	14.7	13400	75000	
A 90 4_166.1	166.1	16.9	14000	28	—	75000	8.4	14000	13.9	—	75000	
A 90 4_180.0	180.0	15.6	14000	26	—	75000	7.8	14000	12.8	—	75000	
A 90 4_209.0	209.0	13.4	14000	22	—	75000	6.7	14000	11.0	—	75000	
A 90 4_226.4	226.4	12.4	14000	20	—	75000	6.2	14000	10.2	—	75000	
A 90 4_281.4	281.4	9.9	14000	16.4	—	75000	5.0	14000	8.2	—	75000	
A 90 4_304.9	304.9	9.2	14000	15.1	—	75000	4.6	14000	7.6	—	75000	
A 90 4_355.8	355.8	7.9	14000	13.0	—	75000	3.9	14000	6.5	—	75000	
A 90 4_385.4	385.4	7.3	14000	12.0	—	75000	3.6	14000	6.0	680	75000	
A 90 4_449.2	449.2	6.2	14000	10.3	—	75000	3.1	14000	5.1	—	75000	
A 90 4_486.6	486.6	5.8	14000	9.5	—	75000	2.9	14000	4.7	950	75000	
A 90 4_555.3	555.3	5.0	14000	8.3	—	75000	2.5	14000	4.2	740	75000	
A 90 4_601.6	601.6	4.7	14000	7.7	—	75000	2.3	14000	3.8	1200	75000	
A 90 4_707.9	707.9	4.0	14000	6.5	—	75000	2.0	14000	3.3	1050	75000	
A 90 4_766.9	766.9	3.7	14000	6.0	—	75000	1.8	14000	3.0	1490	75000	
A 90 4_865.1	865.1	3.2	14000	5.3	—	75000	1.6	14000	2.7	1170	75000	
A 90 4_937.2	937.2	3.0	14000	4.9	—	75000	1.5	14000	2.5	1590	75000	
A 90 4_1025	1025	2.7	14000	4.5	—	75000	1.4	14000	2.2	1330	75000	
A 90 4_1111	1111	2.5	14000	4.2	—	75000	1.3	14000	2.1	1740	75000	
A 90 4_1222	1222	2.3	14000	3.8	—	75000	1.1	14000	1.9	1380	75000	
A 90 4_1324	1324	2.1	14000	3.5	—	75000	1.1	14000	1.7	1790	75000	
A 90 4_1507	1507	1.9	14000	3.1	—	75000	0.93	14000	1.5	1440	75000	
A 90 4_1632	1632	1.7	14000	2.8	—	75000	0.86	14000	1.4	1840	75000	

(—) 请联系我们的技术部门并告知径向负载信息 (转向, 力的方向, 位置)

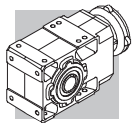

A 90 — 14000 Nm

	i	n_1 = 900 min^{-1}					n_1 = 500 min^{-1}					
		n_2 min^{-1}	M_{n2} Nm	P_{n1} kW	R_{n1} N	R_{n2} N	n_2 min^{-1}	M_{n2} Nm	P_{n1} kW	R_{n1} N	R_{n2} N	
A 90 3_9.7	9.7	93	9050	97	9800	42300	52	9050	54	15000	53700	
A 90 3_10.5	10.5	86	9800	97	9810	42500	48	9800	54	15000	54200	
A 90 3_12.6	12.6	71	11800	97	6720	42100	40	11800	54	13500	54500	
A 90 3_13.7	13.7	66	12750	96	6770	42100	37	12800	54	13500	54600	
A 90 3_15.6	15.6	58	11550	77	8730	46700	32	11550	43	15000	59900	
A 90 3_16.9	16.9	53	12500	77	8750	46800	29.6	12500	43	15000	60300	
A 90 3_19.4	19.4	46	11550	62	9630	51400	25.8	11550	34	15000	65400	
A 90 3_21.0	21.0	43	12400	61	9790	51700	23.8	12400	34	15000	66100	
A 90 3_22.3	22.3	40	13850	64	14200	50200	22.5	14000	36	15000	64700	
A 90 3_24.1	24.1	37	14000	60	14400	51900	20.7	14000	33	15000	66900	
A 90 3_29.1	29.1	31	14000	50	14600	56200	17.2	14000	28	15000	72100	
A 90 3_31.5	31.5	28.6	14000	46	14800	58400	15.9	14000	26	15000	74700	
A 90 3_35.8	35.8	25.1	14000	40	14900	61700	14.0	14000	23	15000	75000	
A 90 3_38.8	38.8	23.2	14000	37	15000	63900	12.9	14000	21	15000	75000	
A 90 3_44.6	44.6	20.2	14000	33	15000	67700	11.2	14000	18.1	15000	75000	
A 90 3_48.3	48.3	18.6	14000	30	15000	70000	10.4	14000	16.7	15000	75000	
A 90 3_55.0	55.0	16.4	14000	26	15000	73800	9.1	14000	14.6	15000	75000	
A 90 3_59.6	59.6	15.1	14000	24	15000	75000	8.4	14000	13.5	15000	75000	
A 90 3_68.8	68.8	13.1	14000	21	15000	75000	7.3	14000	11.7	15000	75000	
A 90 3_74.5	74.5	12.1	14000	19.5	15000	75000	6.7	14000	10.8	15000	75000	
A 90 3_80.4	80.4	11.2	14000	18.0	15000	75000	6.2	14000	10.0	15000	75000	
A 90 3_87.1	87.1	10.3	14000	16.7	15000	75000	5.7	14000	9.3	15000	75000	
A 90 3_98.6	98.6	9.1	14000	14.7	15000	75000	5.1	14000	8.2	15000	75000	
A 90 3_106.8	106.8	8.4	14000	13.6	15000	75000	4.7	14000	7.5	15000	75000	
A 90 3_116.9	116.9	7.7	14000	12.4	15000	75000	4.3	14000	6.9	15000	75000	
A 90 3_126.6	126.6	7.1	14000	11.4	15000	75000	3.9	14000	6.4	15000	75000	303
A 90 3_139.4	139.4	6.5	14000	10.4	15000	75000	3.6	14000	5.8	15000	75000	
A 90 3_151.0	151.0	6.0	14000	9.6	15000	75000	3.3	14000	5.3	15000	75000	
A 90 4_166.1	166.1	5.4	14000	8.9	—	75000	3.0	14000	5.0	700	75000	
A 90 4_180.0	180.0	5.0	14000	8.2	—	75000	2.8	14000	4.6	1400	75000	
A 90 4_209.0	209.0	4.3	14000	7.1	—	75000	2.4	14000	3.9	1500	75000	
A 90 4_226.4	226.4	4.0	14000	6.5	500	75000	2.2	14000	3.6	2100	75000	
A 90 4_281.4	281.4	3.2	14000	5.3	690	75000	1.8	14000	2.9	2300	75000	
A 90 4_304.9	304.9	3.0	14000	4.9	1230	75000	1.6	14000	2.7	2900	75000	
A 90 4_355.8	355.8	2.5	14000	4.2	1240	75000	1.4	14000	2.3	2900	75000	
A 90 4_385.4	385.4	2.3	14000	3.8	1750	75000	1.3	14000	2.1	3400	75000	
A 90 4_449.2	449.2	2.0	14000	3.3	1540	75000	1.1	14000	1.8	3200	75000	
A 90 4_486.6	486.6	1.8	14000	3.0	2020	75000	1.0	14000	1.7	3500	75000	
A 90 4_555.3	555.3	1.6	14000	2.7	1810	75000	0.90	14000	1.5	3500	75000	
A 90 4_601.6	601.6	1.5	14000	2.5	2270	75000	0.83	14000	1.4	3500	75000	
A 90 4_707.9	707.9	1.3	14000	2.1	2120	75000	0.71	14000	1.2	3500	75000	
A 90 4_766.9	766.9	1.2	14000	1.9	2560	75000	0.65	14000	1.1	3500	75000	
A 90 4_865.1	865.1	1.0	14000	1.7	2240	75000	0.58	14000	0.95	3500	75000	
A 90 4_937.2	937.2	0.96	14000	1.6	2660	75000	0.53	14000	0.88	3500	75000	
A 90 4_1025	1025	0.88	14000	1.4	2400	75000	0.49	14000	0.80	3500	75000	
A 90 4_1111	1111	0.81	14000	1.3	2810	75000	0.45	14000	0.74	3500	75000	
A 90 4_1222	1222	0.74	14000	1.2	2450	75000	0.41	14000	0.67	3500	75000	
A 90 4_1324	1324	0.68	14000	1.1	2860	75000	0.38	14000	0.62	3500	75000	
A 90 4_1507	1507	0.60	14000	0.98	2410	75000	0.33	14000	0.55	3500	75000	
A 90 4_1632	1632	0.55	14000	0.91	2910	75000	0.31	14000	0.50	3500	75000	

(—) 请联系我们的技术部门并告知径向负载信息 (转向, 力的方向, 位置)

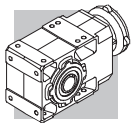

40 电机与减速机的组合范围

请注意下表中的中电机与减速机的组合，仅仅基于结构上的兼容性。

在选择减速电机时，参照第12章的步骤，并且满足条件S⩾ f_S。

(C 40)

		IEC_ BN BE BX (IM B5)																								
		BN		BN	BE	BX	BN	BE	BX	BN	BE	BX	BN	BE	BX	BN	BE	BX	BN	BE	BX	BN	BE	BX	BN	IEC	IEC
P_{n1}(#) [kW]	2p	0.37	0.75	1.5	1.1	—	2.2	2.2	—	4	3	—	4	4	—	9.2	9.2	—	18.5	18.5	—	22	—	—	30	45	55
	4p	0.25	0.55	1.1	0.75	0.75	1.85	1.5	1.5	3	3	3	4	4	4	9.2	9.2	7.5	15	15	15	22	22	22	30	47	55
	6p	0.12	0.37	0.75	—	—	1.1	0.75	—	1.85	1.5	—	2.2	2.2	—	5.5	4	—	11	7.5	—	15	—	—	18.5	30	37
		P63	P71	P80			P90			P100			P112			P132			P160			P180			P200	P225	P250
A 05 2		5.5_91.6	5.5_51.3	5.5_51.3																							
A 10 2		5.5_91.6	5.5_91.6	5.5_65.9			5.5_65.9			5.5_65.9			5.5_65.9														
A 20 2		7.3_92.3 ⛔(10.3)	7.3_92.3 ⛔(10.3)	5.4_79.9			5.4_79.9			5.4_79.9			5.4_79.9														
A 20 3		109.2_380.9	109.2_380.9	109.2_380.9			109.2_380.9			109.2_380.9			109.2_380.9														
A 30 2		9.3_97.5 ⛔(10.5 ; 13.6_16.3)	9.3_97.5 ⛔(10.5 ; 13.6_16.3)	5.4_97.5			5.4_97.5			5.4_97.5			5.4_97.5														
A 30 3		109.1_400.8	109.1_400.8	109.1_400.8			109.1_400.8			109.1_400.8			109.1_400.8														
A 35 2		9.3_95.6 ⛔(13.1_20.4)	9.3_95.6 ⛔(13.1_20.4)	5.4_95.6			5.4_95.6			5.4_95.6			5.4_95.6			5.4_11.8											
A 35 3		105.5_393.2	105.5_393.2	105.5_393.2			105.5_393.2			105.5_393.2			105.5_393.2														
A 41 2		11.7_79.2 ⛔(13.8_17.8)	11.7_79.2 ⛔(13.8_17.8)	5.2_79.2			5.2_79.2			5.2_79.2			5.2_79.2			5.2_45.1											
A 41 3		92.8_376.8	92.8_376.8	92.8_376.8			92.8_376.8			92.8_376.8			92.8_376.8														
A 50 2		20.9	20.9	7.7_20.9			7.7_20.9			7.7_20.9			7.7_20.9			7.7_20.9			7.7_20.9			7.7_20.9					
A 50 3		51.7_190.6	51.7_190.6	24.0_190.6			24.0_190.6			24.0_190.6			24.0_190.6			24.0_109.4			24.0_109.4			24.0_109.4					
A 50 4	i =	211.0_778.2	211.0_778.2	211.0_778.2			211.0_778.2			211.0_778.2			211.0_778.2														
A 55 2				13.1_19.2			13.1_19.2			13.1_19.2			13.1_19.2			4.9_19.2			4.9_19.2			4.9_19.2					
A 55 3		64.3_194.2	64.3_194.2	23.8_194.2			23.8_194.2			23.8_194.2			23.8_194.2			23.8_123.9			23.8_123.9			23.8_123.9					
A 55 4		208.1_793.0	208.1_793.0	208.1_793.0			208.1_793.0			208.1_793.0			208.1_793.0														
A 60 2				10.3_20.6			10.3_20.6			10.3_20.6			10.3_20.6			7.9_20.6			7.9_20.6			7.9_20.6					
A 60 3		65.0_185.8	65.0_185.8	25.7_185.8			25.7_185.8			25.7_185.8			25.7_185.8			25.7_133.3			25.7_133.3			25.7_133.3					
A 60 4		208.7_755.4	208.7_755.4	208.7_755.4			208.7_755.4			208.7_755.4			208.7_755.4														
A 70 3				66.9_153.7			66.9_153.7			66.9_153.7			66.9_153.7			15.4_153.7 ⛔(23.5_30.1)			9.4_153.7			9.4_153.7			9.4_38.4 ⛔(19.7_21.3)		
A 70 4		292.0_1715	292.0_1715	169.8_1715			169.8_1715			169.8_1715			169.8_1715			169.8_644.6											
A 80 3				82.3_156.8			82.3_156.8			82.3_156.8			82.3_156.8			19.3_156.8 ⛔(22.6_38.5)			12.3_156.8 ⛔(22.6_24.5)			9.8_156.8			9.8_104.0	9.8_104.0	
A 80 4		354.0_1558	354.0_1558	171.3_1558			171.3_1558			171.3_1558			171.3_1558			171.3_762.1											
A 90 3				98.6_151.0			98.6_151.0			98.6_151.0			98.6_151.0			55.0_151.0			19.4_151.0 ⛔(22.3_38.8)			9.7_151.0			9.7_126.6	9.7_126.6	9.7_126.6
A 90 4		449.2_1632	449.2_1632	166.1_1632			166.1_1632			166.1_1632			166.1_1632			166.1_937.2			166.1_937.2			166.1_937.2					

（#） P_{n1} 最大输入功率

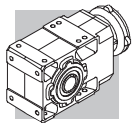

(C 41)

		M05	M1	ME2 - MX2	ME3 - MX4	ME4 - MX4	ME5 - MX5
A 05 2		5.5_91.6	5.5_51.3	5.5_65.9			
A 10 2		5.5_91.6	5.5_51.3	5.5_65.9	5.5_65.9		
A 20 2		7.3_92.3 ⛀ (10.3)	7.3_63.1 ⛀ (10.3)	5.4_79.9	5.4_79.9		
A 20 3		109.2_380.9	109.2_380.9	109.2_380.9	109.2_380.9		
A 30 2			9.3_76.5 ⛀ (10.5 ; 13.6_16.3)	5.4_97.5	5.4_97.5		
A 30 3		109.1_400.8	109.1_400.8	109.1_400.8	109.1_400.8		
A 35 2			9.3_95.6 ⛀ (13.1_20.4)	5.4_95.6	5.4_95.6	5.4_11.8	
A 35 3		105.5_393.2	105.5_393.2	105.5_393.2	105.5_393.2		
A 41 2			11.7_79.2 ⛀ (13.8_17.8)	5.2_79.2	5.2_79.2	5.2_45.1	
A 41 3		92.8_376.8	92.8_376.8	92.8_376.8	92.8_376.8		
A 50 2			20.9	7.7_20.9	7.7_20.9	7.7_20.9	7.7_20.9
A 50 3			51.7_190.6	24.0_190.6	24.0_190.6	24.0_109.4	24.0_109.4
A 50 4	**i =**		211.0_778.2	211.0_778.2	211.0_778.2		
A 55 2				13.1_19.2	13.1_19.2	4.9_19.2	4.9_19.2
A 55 3			64.3_194.2	23.8_194.2	23.8_194.2	23.8_123.9	23.8_123.9
A 55 4			208.1_793.0	208.1_793.0	208.1_793.0		
A 60 2				10.3_20.6	10.3_20.6	7.9_20.6	7.9_20.6
A 60 3				25.7_185.8	25.7_185.8	25.7_133.3	25.7_133.3
A 60 4			208.7_755.4	208.7_755.4	208.7_755.4		
A 70 3				66.9_153.7	66.9_153.7	15.4_153.7 ⛀ (23.5_30.1)	15.4_153.7 ⛀ (23.5_30.1)
A 70 4			292.0_1715	169.8_1715	169.8_1715	169.8_644.6	
A 80 3					82.3_156.8	19.3_156.8 ⛀ (22.6_38.5)	19.3_156.8 ⛀ (22.6_38.5)
A 80 4			354.0_1558	171.3_1558	171.3_1558	171.3_762.1	
A 90 3					98.6_151.0	55.0_151.0	55.0_151.0
A 90 4			449.2_1632	166.1_1632	166.1_1632	166.1_937.2	

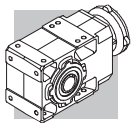

机座A05…A60提供与最常用伺服电机品牌匹配的电机接头。每个机座的图纸部分可查到伺服电机接头相关尺寸。

代码**SK**适用传统的平键输入，而**SC**则适用带有阻尼装置的输入端。

(C 42)

		SERVO INPUT					
		SK40A	SK60A	SK60B	SK80A	SK80B	SK80C
		SC40A	SC60A	SC60B	SC80A	SC80B	SC80C
A 05 2	i =	5.5_91.6	5.5_91.6	5.5_51.3	5.5_51.3		
A 10 2			5.5_91.6	5.5_51.3	5.5_51.3		5.5_65.9
A 20 2			7.3_92.3 ⛀ (10.3)	7.3_63.1 ⛀ (10.3)	7.3_63.1 ⛀ (10.3)		5.4_79.9
A 20 3			109.2_380.9	109.2_380.9	109.2_380.9		109.2_380.9
A 30 2			9.3_97.5 ⛀ (10.5 ; 13.6_16.3)	9.3_76.5 ⛀ (10.5 ; 13.6_16.3)	9.3_76.5 ⛀ (10.5 ; 13.6_16.3)		5.4_97.5
A 30 3			109.1_400.8	109.1_400.8	109.1_400.8		109.1_400.8
A 35 2			9.3_95.6 ⛀ (13.1_20.4)	9.3_95.6 ⛀ (13.1_20.4)	9.3_95.6 ⛀ (13.1_20.4)		5.4_95.6
A 35 3			105.5_393.2	105.5_393.2	105.5_393.2		105.5_393.2
A 41 2						11.7_79.2 ⛀ (13.8_17.8)	5.2_79.2
A 41 3			92.8_376.8	92.8_376.8	92.8_376.8		92.8_376.8
A 50 2						20.9	7.7_20.9
A 50 3						51.7_190.6	24.0_190.6
A 50 4							211.0_778.2
A 55 2							13.1_19.2
A 55 3						64.3_194.2	23.8_194.2
A 55 4							208.1_793.0
A 60 2							10.3_20.6
A 60 3							25.7_185.8
A 60 4						208.7_755.4	208.7_755.4

(C 43)

		SERVO INPUT								
		SK95A	SK95B	SK95C	SK110A	SK110B	SK130A	SK130B	SK180A	SK180B
		SC95A	SC95B	SC95C	SC110A	SC110B	SC130A	SC130B	SC180A	SC180B
A 10 2	i =	5.5_51.3	5.5_65.9	5.5_65.9	5.5_65.9	5.5_65.9				
A 20 2		7.3_63.1 ⛀ (10.3)	5.4_79.9	5.4_79.9	5.4_79.9	5.4_79.9				
A 20 3		109.2_380.9	109.2_380.9	109.2_380.9	109.2_380.9	109.2_380.9				
A 30 2		9.3_76.5 ⛀ (10.5 ; 13.6_16.3)	5.4_97.5	5.4_97.5	5.4_97.5	5.4_97.5	5.4_97.5			
A 30 3		109.1_400.8	109.1_400.8	109.1_400.8	109.1_400.8	109.1_400.8				
A 35 2		9.3_95.6 ⛀ (13.1_20.4)	5.4_95.6	5.4_95.6	5.4_95.6	5.4_95.6	5.4_95.6			
A 35 3		105.5_393.2	105.5_393.2	105.5_393.2	105.5_393.2	105.5_393.2				
A 41 2		11.7_79.2 ⛀ (13.8_17.8)	5.2_79.2	5.2_79.2	5.2_79.2	5.2_79.2	5.2_79.2	5.2_45.1	5.2_45.1	5.2_45.1
A 41 3		92.8_376.8	92.8_376.8	92.8_376.8	92.8_376.8	92.8_376.8				
A 50 2		20.9	7.7_20.9	7.7_20.9	7.7_20.9	7.7_20.9	7.7_20.9	7.7_20.9	7.7_20.9	7.7_20.9
A 50 3		51.7_190.6	24.0_190.6	24.0_190.6	24.0_190.6	24.0_190.6	24.0_190.6	24.0_109.4	24.0_109.4	24.0_109.4
A 50 4		211.0_778.2	211.0_778.2	211.0_778.2	211.0_778.2	211.0_778.2	211.0_778.2			
A 55 2			13.1_19.2	13.1_19.2	13.1_19.2	13.1_19.2	13.1_19.2	4.9_19.2	4.9_19.2	4.9_19.2
A 55 3		64.3_194.2	23.8_194.2	23.8_194.2	23.8_194.2	23.8_194.2	23.8_194.2	23.8_123.9	23.8_123.9	23.8_123.9
A 55 4		208.1_793.0	208.1_793.0	208.1_793.0	208.1_793.0	208.1_793.0	208.1_793.0			
A 60 2			10.3_20.6	10.3_20.6	10.3_20.6	10.3_20.6	10.3_20.6	7.9_20.6	7.9_20.6	7.9_20.6
A 60 3		65.0_185.8	25.7_185.8	25.7_185.8	25.7_185.8	25.7_185.8	25.7_185.8	25.7_133.3	25.7_133.3	25.7_133.3
A 60 4		208.7_755.4	208.7_755.4	208.7_755.4	208.7_755.4	208.7_755.4	208.7_755.4			

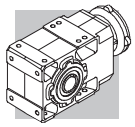

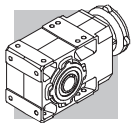

41 转动惯量

下表列出的转动惯量J_r [kgm2]是指减速机高速轴。图例使用的符号如下：



这种图标下的数值指不带电机的紧凑型输入接口的减速机。加上紧凑型电机的转动惯量（在相关的额定值表中给出），可以得到总的转动惯量。



这种图标下的数值指带IEC电机接口的减速机(IEC 标准尺寸...)。

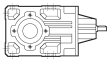

这种图标下的数值指带实心输入轴的减速机。

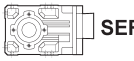

这种图标下的数值指带伺服电机接口的减速机。

A 05

	i	J (•10-4) [kgm2]				
			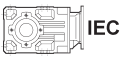 IEC			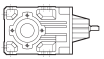
			63	71	80	
A 05 2_5.5	5.5	0.72	0.99	1.0	1.4	—
A 05 2_6.3	6.3	0.56	0.83	0.86	1.2	—
A 05 2_7.2	7.2	0.48	0.74	0.77	1.1	—
A 05 2_8.5	8.5	0.36	0.63	0.65	1.0	—
A 05 2_9.6	9.6	0.29	0.55	0.58	0.92	—
A 05 2_10.6	10.6	0.50	0.77	0.80	1.1	—
A 05 2_12.3	12.3	0.18	0.45	0.48	0.82	—
A 05 2_13.9	13.9	0.35	0.62	0.65	0.99	—
A 05 2_16.4	16.4	0.27	0.54	0.57	0.91	—
A 05 2_18.6	18.6	0.22	0.49	0.51	0.86	—
A 05 2_21.4	21.4	0.16	0.43	0.46	0.80	—
A 05 2_23.8	23.8	0.14	0.41	0.43	0.78	—
A 05 2_25.5	25.5	0.13	0.39	0.42	0.76	—
A 05 2_28.6	28.6	0.11	0.38	0.40	0.75	—
A 05 2_32.2	32.2	0.09	0.36	0.39	0.73	—
A 05 2_35.1	35.1	0.08	0.35	0.37	0.72	—
A 05 2_40.9	40.9	0.07	0.33	0.36	0.70	—
A 05 2_45.4	45.4	0.05	0.32	0.35	0.69	—
A 05 2_51.3	51.3	0.04	0.31	0.34	0.68	—
A 05 2_58.6	58.6	0.04	0.31	—	—	—
A 05 2_65.9	65.9	0.03	0.30	—	—	—
A 05 2_76.4	76.4	0.02	0.29	—	—	—
A 05 2_91.6	91.6	0.02	0.28	—	—	—

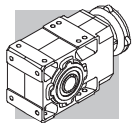

A 05

	i	J (•10-4) [kgm2]					
		SERVO					
		40A		60A		60B 80A	
		SK	SC	SK	SC	SK	SC
A 05 2_5.5	5.5	0.89	1.1	0.99	1.3	1.0	1.4
A 05 2_6.3	6.3	0.73	0.89	0.83	1.1	0.86	1.3
A 05 2_7.2	7.2	0.65	0.81	0.74	1.0	0.77	1.2
A 05 2_8.5	8.5	0.53	0.69	0.63	0.89	0.65	1.1
A 05 2_9.6	9.6	0.46	0.62	0.55	0.81	0.58	1.0
A 05 2_10.6	10.6	0.67	0.83	0.77	1.0	0.80	1.2
A 05 2_12.3	12.3	0.35	0.51	0.45	0.71	0.48	0.92
A 05 2_13.9	13.9	0.52	0.68	0.62	0.88	0.65	1.1
A 05 2_16.4	16.4	0.44	0.60	0.54	0.80	0.57	1.0
A 05 2_18.6	18.6	0.39	0.55	0.49	0.75	0.51	0.95
A 05 2_21.4	21.4	0.33	0.49	0.43	0.69	0.46	0.90
A 05 2_23.8	23.8	0.31	0.47	0.41	0.67	0.43	0.87
A 05 2_25.5	25.5	0.30	0.46	0.39	0.65	0.42	0.86
A 05 2_28.6	28.6	0.28	0.44	0.38	0.64	0.40	0.84
A 05 2_32.2	32.2	0.26	0.42	0.36	0.62	0.39	0.83
A 05 2_35.1	35.1	0.25	0.41	0.35	0.61	0.37	0.81
A 05 2_40.9	40.9	0.24	0.40	0.33	0.59	0.36	0.80
A 05 2_45.4	45.4	0.22	0.38	0.32	0.58	0.35	0.79
A 05 2_51.3	51.3	0.21	0.37	0.31	0.57	0.34	0.78
A 05 2_58.6	58.6	0.21	0.37	0.31	0.57	—	—
A 05 2_65.9	65.9	0.20	0.36	0.30	0.56	—	—
A 05 2_76.4	76.4	0.19	0.35	0.29	0.55	—	—
A 05 2_91.6	91.6	0.19	0.35	0.28	0.54	—	—

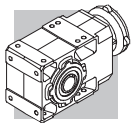

A 10

	i	J (•10-4) [kgm2]							
			IEC						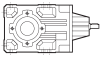
			63	71	80	90	100	112	
A 10 2_5.5	5.5	1.0	2.5	2.5	3.9	3.8	5.1	5.1	1.8
A 10 2_6.3	6.3	0.80	2.3	2.3	3.7	3.6	4.9	4.9	1.6
A 10 2_7.2	7.2	0.60	2.1	2.1	3.5	3.4	4.7	4.7	1.5
A 10 2_8.5	8.5	0.45	1.9	1.9	3.3	3.1	4.5	4.5	1.4
A 10 2_9.6	9.6	0.30	1.8	1.8	3.2	3.1	4.4	4.4	1.3
A 10 2_10.6	10.6	0.50	2.0	2.0	3.4	3.3	4.6	4.6	1.4
A 10 2_12.3	12.3	0.20	1.7	1.7	3.1	3.0	4.3	4.3	1.1
A 10 2_13.9	13.9	0.30	1.8	1.8	3.2	3.1	4.6	4.6	1.2
A 10 2_16.4	16.4	0.25	1.7	1.7	3.1	3.0	4.3	4.3	1.1
A 10 2_18.6	18.6	0.20	1.7	1.7	3.1	3.0	4.3	4.3	1.0
A 10 2_21.4	21.4	0.15	1.6	1.6	3.0	2.9	4.2	4.2	1.0
A 10 2_23.8	23.8	0.10	1.6	1.6	3.0	2.9	4.2	4.2	1.0
A 10 2_25.5	25.5	0.10	1.6	1.6	3.0	2.9	4.2	4.2	1.0
A 10 2_28.6	28.6	0.10	1.6	1.6	3.0	2.9	4.2	4.2	0.90
A 10 2_32.2	32.2	0.08	1.6	1.6	3.0	2.9	4.2	4.2	0.90
A 10 2_35.1	35.1	0.07	1.6	1.6	3.0	2.9	4.2	4.2	0.90
A 10 2_40.9	40.9	0.06	1.6	1.6	3.0	2.9	4.2	4.2	0.90
A 10 2_45.4	45.4	0.05	1.6	1.6	3.0	2.9	4.2	4.2	0.90
A 10 2_51.3	51.3	0.03	1.5	1.5	2.9	2.8	4.1	4.1	0.90
A 10 2_58.6	58.6	0.03	1.5	1.5	2.9	2.8	4.1	4.1	0.90
A 10 2_65.9	65.9	0.02	1.5	1.5	2.9	2.8	4.1	4.1	0.90
A 10 2_76.4	76.4	0.02	1.5	1.5	—	—	—	—	0.90
A 10 2_91.6	91.6	0.01	1.5	1.5	—	—	—	—	0.90

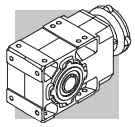

A 10

	i	J (•10-4) [kgm2]									
		SERVO									
		60A		60B 80A		95A		80C 95B 110A		95C 110B	
		SK	SC	SK	SC	SK	SC	SK	SC	SK	SC
A 10 2_5.5	5.5	1.3	1.5	1.3	1.7	3.8	4.3	3.9	4.4	3.8	4.8
A 10 2_6.3	6.3	1.1	1.3	1.1	1.5	3.6	4.1	3.7	4.2	3.6	4.6
A 10 2_7.2	7.2	0.87	1.1	0.89	1.3	3.4	3.9	3.5	4.0	3.4	4.4
A 10 2_8.5	8.5	0.72	0.98	0.74	1.2	3.3	3.7	3.3	3.8	3.1	4.1
A 10 2_9.6	9.6	0.57	0.83	0.59	1.0	3.1	3.6	3.2	3.7	3.1	4.1
A 10 2_10.6	10.6	0.77	1.0	0.79	1.2	3.3	3.8	3.4	3.9	3.3	4.3
A 10 2_12.3	12.3	0.47	0.73	0.49	0.93	3.0	3.5	3.1	3.6	3.0	4.0
A 10 2_13.9	13.9	0.57	0.83	0.59	1.0	3.1	3.6	3.2	3.7	3.1	4.1
A 10 2_16.4	16.4	0.52	0.78	0.54	0.98	3.1	3.5	3.1	3.6	3.0	4.0
A 10 2_18.6	18.6	0.47	0.73	0.49	0.93	3.0	3.5	3.1	3.6	3.0	4.0
A 10 2_21.4	21.4	0.42	0.68	0.44	0.88	3.0	3.4	3.0	3.5	2.9	3.9
A 10 2_23.8	23.8	0.37	0.63	0.39	0.83	2.9	3.4	3.0	3.5	2.9	3.9
A 10 2_25.5	25.5	0.37	0.63	0.39	0.83	2.9	3.4	3.0	3.5	2.9	3.9
A 10 2_28.6	28.6	0.37	0.63	0.39	0.83	2.9	3.4	3.0	3.5	2.9	3.9
A 10 2_32.2	32.2	0.35	0.61	0.37	0.81	2.9	3.3	3.0	3.5	2.9	3.9
A 10 2_35.1	35.1	0.34	0.60	0.36	0.80	2.9	3.3	3.0	3.5	2.9	3.9
A 10 2_40.9	40.9	0.33	0.59	0.35	0.79	2.9	3.3	3.0	3.5	2.9	3.9
A 10 2_45.4	45.4	0.32	0.58	0.34	0.78	2.9	3.3	3.0	3.5	2.9	3.9
A 10 2_51.3	51.3	0.30	0.56	0.32	0.76	2.9	3.3	2.9	3.4	2.8	3.8
A 10 2_58.6	58.6	0.30	0.56	—	—	—	—	2.9	3.4	2.8	3.8
A 10 2_65.9	65.9	0.29	0.55	—	—	—	—	2.9	3.4	2.8	3.8
A 10 2_76.4	76.4	0.29	0.55	—	—	—	—	—	—	—	—
A 10 2_91.6	91.6	0.28	0.54	—	—	—	—	—	—	—	—

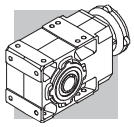

A 20

	i	J (•10-4) [kgm2]							
			IEC						
			63	71	80	90	100	112	
A 20 2_5.4	5.4	2.4	—	—	5.3	5.2	6.5	6.5	4.3
A 20 2_6.5	6.5	1.9	—	—	4.8	4.7	6.0	6.0	3.8
A 20 2_7.3	7.3	1.4	2.9	2.9	4.3	4.2	5.5	5.5	3.3
A 20 2_8.4	8.4	1.1	2.6	2.6	4.0	3.9	5.2	5.2	3.0
A 20 2_9.4	9.4	0.90	2.4	2.4	3.8	3.7	5.0	5.0	2.8
A 20 2_10.3	10.3	1.2	—	—	4.1	4.0	5.3	5.3	3.0
A 20 2_12.0	12.0	0.50	2.0	2.0	3.4	3.3	4.6	4.6	2.4
A 20 2_14.1	14.1	0.70	2.2	2.2	3.6	3.5	4.8	4.8	2.6
A 20 2_16.2	16.2	0.55	2.0	2.0	3.4	3.3	4.6	4.6	2.5
A 20 2_18.1	18.1	0.40	1.9	1.9	3.3	3.2	4.5	4.5	2.4
A 20 2_21.2	21.2	0.35	1.8	1.8	3.2	3.1	4.4	4.4	2.3
A 20 2_23.1	23.1	0.30	1.8	1.8	3.2	3.1	4.4	4.4	2.2
A 20 2_26.5	26.5	0.25	1.7	1.7	3.1	3.0	4.3	4.3	2.1
A 20 2_29.2	29.2	0.20	1.7	1.7	3.1	3.0	4.3	4.3	2.1
A 20 2_31.3	31.3	0.20	1.7	1.7	3.1	3.0	4.3	4.3	2.1
A 20 2_35.4	35.4	0.20	1.7	1.7	3.1	3.0	4.3	4.3	2.1
A 20 2_39.6	39.6	0.10	1.6	1.6	3.0	2.9	4.2	4.2	2.0
A 20 2_43.2	43.2	0.10	1.6	1.6	3.0	2.9	4.2	4.2	2.0
A 20 2_48.3	48.3	0.10	1.6	1.6	3.0	2.9	4.2	4.2	2.0
A 20 2_53.7	53.7	0.10	1.6	1.6	3.0	2.9	4.2	4.2	2.0
A 20 2_63.1	63.1	0.10	1.6	1.6	3.0	2.9	4.2	4.2	2.0
A 20 2_71.0	71.0	0.05	1.5	1.5	2.9	2.8	4.1	4.1	2.0
A 20 2_79.9	79.9	0.03	1.5	1.5	2.9	2.8	4.1	4.1	2.0
A 20 2_92.3	92.3	0.02	1.5	1.5	—	—	—	—	2.0
A 20 3_109.2	109.2	0.02	1.5	1.5	2.9	2.8	4.1	4.1	0.90
A 20 3_120.5	120.5	0.02	1.5	1.5	2.9	2.8	4.1	4.1	0.90
A 20 3_129.1	129.1	0.02	1.5	1.5	2.9	2.8	4.1	4.1	0.90
A 20 3_146.1	146.1	0.02	1.5	1.5	2.9	2.8	4.1	4.1	0.90
A 20 3_163.4	163.4	0.01	1.5	1.5	2.9	2.8	4.1	4.1	0.90
A 20 3_178.3	178.3	0.01	1.5	1.5	2.9	2.8	4.1	4.1	0.90
A 20 3_199.2	199.2	0.01	1.5	1.5	2.9	2.8	4.1	4.1	0.90
A 20 3_221.3	221.3	0.01	1.5	1.5	2.9	2.8	4.1	4.1	0.90
A 20 3_260.5	260.5	0.01	1.5	1.5	2.9	2.8	4.1	4.1	0.90
A 20 3_292.8	292.8	0.01	1.5	1.5	2.9	2.8	4.1	4.1	0.90
A 20 3_329.4	329.4	0.01	1.5	1.5	2.9	2.8	4.1	4.1	0.90
A 20 3_380.9	380.9	0.01	1.5	1.5	2.9	2.8	4.1	4.1	0.90

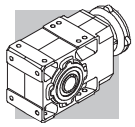

A 20

	i	J (•10-4) [kgm2]									
		SERVO									
		60A		60B 80A		95A		80C 95B 110A		95C 110B	
		SK	SC	SK	SC	SK	SC	SK	SC	SK	SC
A 20 2_5.4	5.4	—	—	—	—	—	—	5.3	5.8	5.2	6.2
A 20 2_6.5	6.5	—	—	—	—	—	—	4.8	5.3	4.7	5.7
A 20 2_7.3	7.3	1.7	1.9	1.7	2.1	4.2	4.7	4.3	4.8	4.2	5.2
A 20 2_8.4	8.4	1.4	1.6	1.4	1.8	3.9	4.6	4.0	4.5	3.9	4.9
A 20 2_9.4	9.4	1.2	1.4	1.2	1.6	3.7	4.2	3.8	4.3	3.7	4.7
A 20 2_10.3	10.3	—	—	—	—	—	—	4.1	4.6	4.0	5.0
A 20 2_12.0	12.0	0.77	1.0	0.79	1.2	3.3	3.8	3.4	3.9	3.3	4.3
A 20 2_14.1	14.1	0.97	1.2	0.99	1.4	3.5	4.0	3.6	4.1	3.5	4.5
A 20 2_16.2	16.2	0.82	1.1	0.84	1.3	3.4	3.8	3.4	3.9	3.3	4.3
A 20 2_18.1	18.1	0.67	0.93	0.69	1.1	3.2	3.7	3.3	3.8	3.2	4.2
A 20 2_21.2	21.2	0.62	0.88	0.64	1.1	3.2	3.6	3.2	3.7	3.1	4.1
A 20 2_23.1	23.1	0.57	0.83	0.59	1.0	3.1	3.6	3.2	3.7	3.1	4.1
A 20 2_26.5	26.5	0.52	0.78	0.54	0.98	3.1	3.5	3.1	3.6	3.0	4.0
A 20 2_29.2	29.2	0.47	0.73	0.49	0.93	3.0	3.5	3.1	3.6	3.0	4.0
A 20 2_31.3	31.3	0.47	0.73	0.49	0.93	3.0	3.5	3.1	3.6	3.0	4.0
A 20 2_35.4	35.4	0.47	0.73	0.49	0.93	3.0	3.5	3.1	3.6	3.0	4.0
A 20 2_39.6	39.6	0.37	0.63	0.39	0.83	2.9	3.4	3.0	3.5	2.9	3.9
A 20 2_43.2	43.2	0.37	0.63	0.39	0.83	2.9	3.4	3.0	3.5	2.9	3.9
A 20 2_48.3	48.3	0.37	0.63	0.39	0.83	2.9	3.4	3.0	3.5	2.9	3.9
A 20 2_53.7	53.7	0.37	0.63	0.39	0.83	2.9	3.4	3.0	3.5	2.9	3.9
A 20 2_63.1	63.1	0.37	0.63	0.39	0.83	2.9	3.4	3.0	3.5	2.9	3.9
A 20 2_71.0	71.0	0.32	0.58	—	—	—	—	2.9	3.4	2.8	3.8
A 20 2_79.9	79.9	0.30	0.56	—	—	—	—	2.9	3.4	2.8	3.8
A 20 2_92.3	92.3	0.29	0.55	—	—	—	—	—	—	—	—
A 20 3_109.2	109.2	0.29	0.55	0.31	0.75	2.8	3.3	2.9	3.4	2.8	3.8
A 20 3_120.5	120.5	0.29	0.55	0.31	0.75	2.8	3.3	2.9	3.4	2.8	3.8
A 20 3_129.1	129.1	0.29	0.55	0.31	0.75	2.8	3.3	2.9	3.4	2.8	3.8
A 20 3_146.1	146.1	0.29	0.55	0.31	0.75	2.8	3.3	2.9	3.4	2.8	3.8
A 20 3_163.4	163.4	0.28	0.54	0.30	0.74	2.8	3.3	2.9	3.4	2.8	3.8
A 20 3_178.3	178.3	0.28	0.54	0.30	0.74	2.8	3.3	2.9	3.4	2.8	3.8
A 20 3_199.2	199.2	0.28	0.54	0.30	0.74	2.8	3.3	2.9	3.4	2.8	3.8
A 20 3_221.3	221.3	0.28	0.54	0.30	0.74	2.8	3.3	2.9	3.4	2.8	3.8
A 20 3_260.5	260.5	0.28	0.54	0.30	0.74	2.8	3.3	2.9	3.4	2.8	3.8
A 20 3_292.8	292.8	0.28	0.54	0.30	0.74	2.8	3.3	2.9	3.4	2.8	3.8
A 20 3_329.4	329.4	0.28	0.54	0.30	0.74	2.8	3.3	2.9	3.4	2.8	3.8
A 20 3_380.9	380.9	0.28	0.54	0.30	0.74	2.8	3.3	2.9	3.4	2.8	3.8

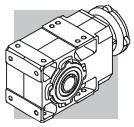

A 30

	i	J (•10-4) [kgm2]							
			IEC						
			63	71	80	90	100	112	
A 30 2_5.4	5.4	4.5	—	—	7.4	7.3	8.6	8.6	6.9
A 30 2_6.4	6.4	3.4	—	—	6.6	6.6	7.8	7.8	6.0
A 30 2_7.0	7.0	2.9	—	—	5.8	5.8	7.0	7.0	5.2
A 30 2_8.5	8.5	2.2	—	—	5.1	5.1	6.3	6.3	4.6
A 30 2_9.3	9.3	1.6	3.1	3.1	4.5	4.4	5.7	5.7	4.0
A 30 2_10.5	10.5	2.3	—	—	5.2	5.1	6.4	6.4	4.6
A 30 2_11.8	11.8	1.1	2.6	2.6	4.0	3.9	5.2	5.2	3.4
A 30 2_13.6	13.6	1.5	—	—	4.4	4.3	5.6	5.6	3.9
A 30 2_16.3	16.3	1.2	—	—	4.1	4.0	5.3	5.3	3.5
A 30 2_18.0	18.0	0.90	2.4	2.4	3.8	3.7	5.0	5.0	3.2
A 30 2_20.5	20.5	0.70	2.2	2.2	3.6	3.5	4.8	4.8	3.1
A 30 2_22.8	22.8	0.60	2.1	2.1	3.5	3.4	4.7	4.7	3.0
A 30 2_26.5	26.5	0.50	2.0	2.0	3.4	3.3	4.6	4.6	2.9
A 30 2_29.3	29.3	0.40	1.9	1.9	3.3	3.2	4.5	4.5	2.8
A 30 2_33.4	33.4	0.35	1.8	1.8	3.2	3.1	4.4	4.4	2.7
A 30 2_36.6	36.6	0.30	1.8	1.8	3.2	3.1	4.4	4.4	2.7
A 30 2_39.3	39.3	0.25	1.7	1.7	3.1	3.0	4.3	4.3	2.6
A 30 2_43.4	43.4	0.20	1.7	1.7	3.1	3.0	4.3	4.3	2.6
A 30 2_48.3	48.3	0.20	1.7	1.7	3.1	3.0	4.3	4.3	2.6
A 30 2_52.7	52.7	0.20	1.7	1.7	3.1	3.0	4.3	4.3	2.5
A 30 2_59.4	59.4	0.10	1.6	1.6	3.0	2.9	4.2	4.2	2.5
A 30 2_66.0	66.0	0.10	1.6	1.6	3.0	2.9	4.2	4.2	2.5
A 30 2_76.5	76.5	0.10	1.6	1.6	3.0	2.9	4.2	4.2	2.5
A 30 2_86.7	86.7	0.10	1.6	1.6	3.0	2.9	4.2	4.2	2.5
A 30 2_97.5	97.5	0.10	1.6	1.6	3.0	2.9	4.2	4.2	2.4
A 30 3_109.1	109.1	0.10	1.6	1.6	3.0	2.9	4.2	4.2	0.90
A 30 3_120.5	120.5	0.10	1.6	1.6	3.0	2.9	4.2	4.2	0.90
A 30 3_137.4	137.4	0.10	1.6	1.6	3.0	2.9	4.2	4.2	0.90
A 30 3_150.7	150.7	0.10	1.6	1.6	3.0	2.9	4.2	4.2	0.90
A 30 3_161.4	161.4	0.10	1.6	1.6	3.0	2.9	4.2	4.2	0.90
A 30 3_178.5	178.5	0.10	1.6	1.6	3.0	2.9	4.2	4.2	0.90
A 30 3_198.5	198.5	0.10	1.6	1.6	3.0	2.9	4.2	4.2	0.90
A 30 3_216.6	216.6	0.10	1.6	1.6	3.0	2.9	4.2	4.2	0.90
A 30 3_244.3	244.3	0.10	1.6	1.6	3.0	2.9	4.2	4.2	0.90
A 30 3_271.5	271.5	0.10	1.6	1.6	3.0	2.9	4.2	4.2	0.90
A 30 3_314.5	314.5	0.10	1.6	1.6	3.0	2.9	4.2	4.2	0.90
A 30 3_356.3	356.3	0.06	1.6	1.6	3.0	2.9	4.2	4.2	0.90
A 30 3_400.8	400.8	0.04	1.5	1.6	2.9	2.8	4.1	4.1	0.90

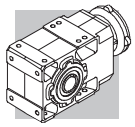

A 30

	i	J (•10-4) [kgm2]											
		SERVO											
		60A		60B 80A		95A		80C 95B 110A		95C 110B		130A	
		SK	SC	SK	SC	SK	SC	SK	SC	SK	SC	SK	SC
A 30 2_5.4	5.4	—	—	—	—	—	—	7.4	7.9	7.3	8.3	7.3	8.3
A 30 2_6.4	6.4	—	—	—	—	—	—	6.6	7.1	6.6	7.6	6.6	7.6
A 30 2_7.0	7.0	—	—	—	—	—	—	5.8	6.3	5.8	6.8	5.8	6.8
A 30 2_8.5	8.5	—	—	—	—	—	—	5.1	5.6	5.1	6.1	5.1	6.1
A 30 2_9.3	9.3	1.9	2.1	1.9	2.3	4.4	4.9	4.5	5.0	4.4	5.4	4.4	5.4
A 30 2_10.5	10.5	—	—	—	—	—	—	5.2	5.7	5.1	6.1	5.1	6.1
A 30 2_11.8	11.8	1.4	1.6	1.4	1.8	3.9	4.4	4.0	4.5	3.9	4.9	3.9	4.9
A 30 2_13.6	13.6	—	—	—	—	—	—	4.4	4.9	4.3	5.3	4.3	5.3
A 30 2_16.3	16.3	—	—	—	—	—	—	4.1	4.6	4.0	5.0	4.0	5.0
A 30 2_18.0	18.0	1.2	1.4	1.2	1.6	3.7	4.2	3.8	4.3	3.7	4.7	3.7	4.7
A 30 2_20.5	20.5	0.97	1.2	0.99	1.4	3.5	4.0	3.6	4.1	3.5	4.5	3.5	4.5
A 30 2_22.8	22.8	0.87	1.1	0.89	1.3	3.4	3.9	3.5	4.0	3.4	4.4	3.4	4.4
A 30 2_26.5	26.5	0.77	1.0	0.79	1.2	3.3	3.8	3.4	3.9	3.3	4.3	3.3	4.3
A 30 2_29.3	29.3	0.67	0.93	0.69	1.1	3.2	3.7	3.3	3.8	3.2	4.2	3.2	4.2
A 30 2_33.4	33.4	0.62	0.88	0.64	1.1	3.2	3.6	3.2	3.7	3.1	4.1	3.1	4.1
A 30 2_36.6	36.6	0.57	0.83	0.59	1.0	3.1	3.6	3.2	3.7	3.1	4.1	3.1	4.1
A 30 2_39.3	39.3	0.52	0.78	0.54	0.98	3.1	3.5	3.1	3.6	3.0	4.0	3.0	4.0
A 30 2_43.4	43.4	0.47	0.73	0.49	0.93	3.0	3.5	3.1	3.6	3.0	4.0	3.0	4.0
A 30 2_48.3	48.3	0.47	0.73	0.49	0.93	3.0	3.5	3.1	3.6	3.0	4.0	3.0	4.0
A 30 2_52.7	52.7	0.47	0.73	0.49	0.93	3.0	3.5	3.1	3.6	3.0	4.0	3.0	4.0
A 30 2_59.4	59.4	0.37	0.63	0.39	0.83	2.9	3.4	3.0	3.5	2.9	3.9	2.9	3.9
A 30 2_66.0	66.0	0.37	0.63	0.39	0.83	2.9	3.4	3.0	3.5	2.9	3.9	2.9	3.9
A 30 2_76.5	76.5	0.37	0.63	0.39	0.83	2.9	3.4	3.0	3.5	2.9	3.9	2.9	3.9
A 30 2_86.7	86.7	0.37	0.63	—	—	—	—	3.0	3.5	2.9	3.9	2.9	3.9
A 30 2_97.5	97.5	0.37	0.63	—	—	—	—	3.0	3.5	2.9	3.9	2.9	3.9
A 30 3_109.1	109.1	0.37	0.63	0.39	0.83	2.9	3.4	3.0	3.5	2.9	3.9	—	—
A 30 3_120.5	120.5	0.37	0.63	0.39	0.83	2.9	3.4	3.0	3.5	2.9	3.9	—	—
A 30 3_137.4	137.4	0.37	0.63	0.39	0.83	2.9	3.4	3.0	3.5	2.9	3.9	—	—
A 30 3_150.7	150.7	0.37	0.63	0.39	0.83	2.9	3.4	3.0	3.5	2.9	3.9	—	—
A 30 3_161.4	161.4	0.37	0.63	0.39	0.83	2.9	3.4	3.0	3.5	2.9	3.9	—	—
A 30 3_178.5	178.5	0.37	0.63	0.39	0.83	2.9	3.4	3.0	3.5	2.9	3.9	—	—
A 30 3_198.5	198.5	0.37	0.63	0.39	0.83	2.9	3.4	3.0	3.5	2.9	3.9	—	—
A 30 3_216.6	216.6	0.37	0.63	0.39	0.83	2.9	3.4	3.0	3.5	2.9	3.9	—	—
A 30 3_244.3	244.3	0.37	0.63	0.39	0.83	2.9	3.4	3.0	3.5	2.9	3.9	—	—
A 30 3_271.5	271.5	0.37	0.63	0.39	0.83	2.9	3.4	3.0	3.5	2.9	3.9	—	—
A 30 3_314.5	314.5	0.37	0.63	0.39	0.83	2.9	3.4	3.0	3.5	2.9	3.9	—	—
A 30 3_356.3	356.3	0.33	0.59	0.35	0.79	2.9	3.3	3.0	3.5	2.9	3.9	—	—
A 30 3_400.8	400.8	0.31	0.57	0.33	0.77	2.9	3.3	2.9	3.4	2.8	3.8	—	—

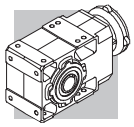

A 35

	i	J (•10-4) [kgm2]								
			IEC							
			63	71	80	90	100	112	132	
A 35 2_5.4	5.4	7.3	—	—	10	9.9	11	11	24	9.4
A 35 2_6.4	6.4	5.4	—	—	8.1	8.0	9.2	9.2	22	7.4
A 35 2_7.0	7.0	4.6	—	—	7.3	7.2	8.4	8.4	21	6.6
A 35 2_8.5	8.5	3.3	—	—	6.1	5.9	7.1	7.1	20	5.4
A 35 2_9.3	9.3	2.8	3.5	3.5	5.6	5.4	6.6	6.6	19	4.9
A 35 2_10.6	10.6	2.1	2.9	2.9	4.9	4.8	6.0	6.0	19	4.2
A 35 2_11.8	11.8	1.8	2.5	2.5	4.6	4.4	5.7	5.7	18	3.9
A 35 2_13.1	13.1	3.0	—	—	5.7	5.6	6.8	6.8	—	5.0
A 35 2_15.5	15.5	2.2	—	—	5.0	4.9	6.1	6.1	—	4.3
A 35 2_17.0	17.0	2.0	—	—	4.7	4.6	5.8	5.8	—	4.0
A 35 2_20.4	20.4	1.6	—	—	4.3	4.2	5.4	5.4	—	3.6
A 35 2_22.5	22.5	1.3	2.0	2.0	4.1	3.9	5.1	5.1	—	3.4
A 35 2_25.7	25.7	0.97	1.7	1.7	3.7	3.6	4.8	4.8	—	3.0
A 35 2_28.4	28.4	0.86	1.6	1.6	3.6	3.5	4.7	4.7	—	2.9
A 35 2_33.2	33.2	0.69	1.4	1.4	3.5	3.3	4.5	4.5	—	2.8
A 35 2_36.6	36.6	0.58	1.3	1.3	3.3	3.2	4.4	4.4	—	2.6
A 35 2_41.8	41.8	0.48	1.2	1.2	3.2	3.1	4.3	4.3	—	2.5
A 35 2_45.8	45.8	0.42	1.1	1.1	3.2	3.1	4.3	4.3	—	2.5
A 35 2_49.1	49.1	0.38	1.1	1.1	3.1	3.0	4.2	4.2	—	2.4
A 35 2_54.3	54.3	0.33	1.1	1.0	3.1	3.0	4.2	4.2	—	2.4
A 35 2_60.4	60.4	0.29	1.0	1.0	3.0	2.9	4.1	4.1	—	2.3
A 35 2_65.8	65.8	0.25	1.0	1.0	3.0	2.9	4.1	4.1	—	2.3
A 35 2_74.3	74.3	0.21	0.95	0.93	3.0	2.8	4.1	4.1	—	2.3
A 35 2_82.5	82.5	0.18	0.92	0.90	2.9	2.8	4.0	4.0	—	2.2
A 35 2_95.6	95.6	0.15	0.88	0.87	2.9	2.8	4.0	4.0	—	2.2
A 35 3_105.5	105.5	0.11	0.89	0.87	2.9	2.8	4.0	4.0	—	0.80
A 35 3_116.9	116.9	0.11	0.88	0.87	2.9	2.8	4.0	4.0	—	0.79
A 35 3_136.3	136.3	0.10	0.87	0.86	2.9	2.8	4.0	4.0	—	0.78
A 35 3_150.6	150.6	0.09	0.86	0.85	2.9	2.8	4.0	4.0	—	0.77
A 35 3_171.8	171.8	0.08	0.86	0.84	2.9	2.8	4.0	4.0	—	0.77
A 35 3_188.3	188.3	0.08	0.85	0.84	2.9	2.7	4.0	4.0	—	0.76
A 35 3_201.8	201.8	0.08	0.85	0.84	2.9	2.7	4.0	4.0	—	0.76
A 35 3_223.2	223.2	0.08	0.85	0.84	2.9	2.7	4.0	4.0	—	0.76
A 35 3_248.1	248.1	0.07	0.85	0.83	2.9	2.7	4.0	4.0	—	0.76
A 35 3_270.7	270.7	0.07	0.84	0.83	2.9	2.7	4.0	4.0	—	0.75
A 35 3_305.4	305.4	0.07	0.84	0.83	2.9	2.7	4.0	4.0	—	0.75
A 35 3_339.3	339.3	0.07	0.84	0.83	2.9	2.7	4.0	4.0	—	0.75
A 35 3_393.2	393.2	0.07	0.84	0.83	2.9	2.7	3.9	3.9	—	0.75

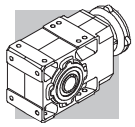

A 35

	i	J (•10-4) [kgm2]											
		SERVO											
		60A		60B 80A		95A		80C 95B 110A		95C 110B		130A	
		SK	SC	SK	SC	SK	SC	SK	SC	SK	SC	SK	SC
A 35 2_5.4	5.4	—	—	—	—	—	—	10	11	9.9	10.9	9.9	11
A 35 2_6.4	6.4	—	—	—	—	—	—	8.1	8.6	8.0	9.0	8.0	9.0
A 35 2_7.0	7.0	—	—	—	—	—	—	7.3	7.8	7.2	8.2	7.2	8.2
A 35 2_8.5	8.5	—	—	—	—	—	—	6.1	6.6	5.9	6.9	5.9	6.9
A 35 2_9.3	9.3	3.1	3.3	3.1	3.5	5.6	6.1	5.6	6.1	5.4	6.4	5.4	6.4
A 35 2_10.6	10.6	2.4	2.6	2.4	2.8	4.9	5.4	4.9	5.4	4.8	5.8	4.8	5.8
A 35 2_11.8	11.8	2.1	2.3	2.1	2.5	4.6	5.1	4.6	5.1	4.4	5.4	4.4	5.4
A 35 2_13.1	13.1	—	—	—	—	—	—	5.7	6.2	5.6	6.6	5.6	6.6
A 35 2_15.5	15.5	—	—	—	—	—	—	5.0	5.5	4.9	5.9	4.9	5.9
A 35 2_17.0	17.0	—	—	—	—	—	—	4.7	5.2	4.6	5.6	4.6	5.6
A 35 2_20.4	20.4	—	—	—	—	—	—	4.3	4.8	4.2	5.2	4.2	5.2
A 35 2_22.5	22.5	1.6	1.8	1.6	2.0	4.1	4.6	4.1	4.6	3.9	4.9	3.9	4.9
A 35 2_25.7	25.7	1.2	1.5	1.3	1.7	3.8	4.2	3.7	4.2	3.6	4.6	3.6	4.6
A 35 2_28.4	28.4	1.1	1.4	1.2	1.6	3.7	4.1	3.6	4.1	3.5	4.5	3.5	4.5
A 35 2_33.2	33.2	0.96	1.2	0.98	1.4	3.5	3.9	3.5	4.0	3.3	4.3	3.3	4.3
A 35 2_36.6	36.6	0.85	1.1	0.87	1.3	3.4	3.8	3.3	3.8	3.2	4.2	3.2	4.2
A 35 2_41.8	41.8	0.75	1.0	0.77	1.2	3.3	3.7	3.2	3.7	3.1	4.1	3.1	4.1
A 35 2_45.8	45.8	0.69	0.95	0.71	1.1	3.2	3.7	3.2	3.7	3.1	4.1	3.1	4.1
A 35 2_49.1	49.1	0.65	0.91	0.67	1.1	3.2	3.6	3.1	3.6	3.0	4.0	3.0	4.0
A 35 2_54.3	54.3	0.60	0.86	0.62	1.1	3.2	3.6	3.1	3.6	3.0	4.0	3.0	4.0
A 35 2_60.4	60.4	0.56	0.82	0.58	1.0	3.1	3.5	3.0	3.5	2.9	3.9	2.9	3.9
A 35 2_65.8	65.8	0.52	0.78	0.54	0.98	3.1	3.5	3.0	3.5	2.9	3.9	2.9	3.9
A 35 2_74.3	74.3	0.48	0.74	0.50	0.94	3.0	3.5	3.0	3.5	2.8	3.8	2.8	3.8
A 35 2_82.5	82.5	0.45	0.71	0.47	0.91	3.0	3.4	2.9	3.4	2.8	3.8	2.8	3.8
A 35 2_95.6	95.6	0.42	0.68	0.44	0.88	3.0	3.4	2.9	3.4	2.8	3.8	2.8	3.8
A 35 3_105.5	105.5	0.38	0.64	0.40	0.84	2.9	3.4	2.9	3.4	2.8	3.8	—	—
A 35 3_116.9	116.9	0.38	0.64	0.40	0.84	2.9	3.4	2.9	3.4	2.8	3.8	—	—
A 35 3_136.3	136.3	0.37	0.63	0.39	0.83	2.9	3.4	2.9	3.4	2.8	3.8	—	—
A 35 3_150.6	150.6	0.36	0.62	0.38	0.82	2.9	3.3	2.9	3.4	2.8	3.8	—	—
A 35 3_171.8	171.8	0.35	0.61	0.37	0.81	2.9	3.3	2.9	3.4	2.8	3.8	—	—
A 35 3_188.3	188.3	0.35	0.61	0.37	0.81	2.9	3.3	2.9	3.4	2.7	3.7	—	—
A 35 3_201.8	201.8	0.35	0.61	0.37	0.81	2.9	3.3	2.9	3.4	2.7	3.7	—	—
A 35 3_223.2	223.2	0.35	0.61	0.37	0.81	2.9	3.3	2.9	3.4	2.7	3.7	—	—
A 35 3_248.1	248.1	0.34	0.60	0.36	0.80	2.9	3.3	2.9	3.4	2.7	3.7	—	—
A 35 3_270.7	270.7	0.34	0.60	0.36	0.80	2.9	3.3	2.9	3.4	2.7	3.7	—	—
A 35 3_305.4	305.4	0.34	0.60	0.36	0.80	2.9	3.3	2.9	3.4	2.7	3.7	—	—
A 35 3_339.3	339.3	0.34	0.60	0.36	0.80	2.9	3.3	2.9	3.4	2.7	3.7	—	—
A 35 3_393.2	393.2	0.34	0.60	0.36	0.80	2.9	3.3	2.9	3.4	2.7	3.7	—	—

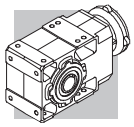

A 41

	i	J (•10-4) [kgm2]								
			IEC							
			63	71	80	90	100	112	132	
A 41 2_5.2	5.2	13	—	—	16	16	17	17	32	23
A 41 2_7.1	7.1	7.3	—	—	10	10	11	11	26	18
A 41 2_8.3	8.3	5.9	—	—	8.8	8.7	10	10	25	16
A 41 2_9.2	9.2	4.5	—	—	7.4	7.3	8.6	8.6	23	15
A 41 2_10.1	10.1	5.9	—	—	8.8	8.7	10	10	25	16
A 41 2_11.7	11.7	2.9	4.4	4.4	5.8	5.7	7.0	7.0	22	13
A 41 2_13.8	13.8	3.6	—	—	6.5	6.4	7.7	7.7	23	14
A 41 2_16.1	16.1	2.9	—	—	5.8	5.7	7.0	7.0	22	13
A 41 2_17.8	17.8	2.2	—	—	5.1	5.0	6.3	6.3	21	11
A 41 2_22.7	22.7	1.5	3.0	3.0	4.4	4.3	5.6	5.6	20	11
A 41 2_28.3	28.3	1.1	2.6	2.6	4.0	3.9	5.2	5.2	20	10
A 41 2_35.9	35.9	1.7	3.2	3.2	4.6	4.5	5.8	5.8	20	9.8
A 41 2_45.1	45.1	1.5	3.0	3.0	4.4	4.3	5.6	5.6	20	9.6
A 41 2_48.3	48.3	1.4	2.9	2.9	4.3	4.2	5.5	5.5	—	9.5
A 41 2_53.1	53.1	1.4	2.9	2.9	4.3	4.2	5.5	5.5	—	9.5
A 41 2_58.8	58.8	1.3	2.8	2.8	4.2	4.1	5.4	5.4	—	9.4
A 41 2_64.2	64.2	1.3	2.8	2.8	4.2	4.1	5.4	5.4	—	9.4
A 41 2_71.3	71.3	1.2	2.7	2.7	4.1	4.0	5.3	5.3	—	9.3
A 41 2_79.2	79.2	1.2	2.7	2.7	4.1	4.0	5.3	5.3	—	9.3
A 41 3_92.8	92.8	1.1	2.6	2.6	4.0	3.9	5.2	5.2	—	9.2
A 41 3_115.9	115.9	0.20	1.7	1.7	2.9	3.0	4.3	4.3	—	2.1
A 41 3_146.9	146.9	0.10	1.6	1.6	2.8	2.9	4.2	4.2	—	2.1
A 41 3_184.4	184.4	0.10	1.6	1.6	2.8	2.9	4.2	4.2	—	2.1
A 41 3_197.5	197.5	0.10	1.6	1.6	2.8	2.9	4.2	4.2	—	2.0
A 41 3_217.4	217.4	0.10	1.6	1.6	2.8	2.9	4.2	4.2	—	2.0
A 41 3_240.6	240.6	0.10	1.6	1.6	2.8	2.9	4.2	4.2	—	2.0
A 41 3_262.5	262.5	0.10	1.6	1.6	2.8	2.9	4.2	4.2	—	2.0
A 41 3_291.7	291.7	0.10	1.6	1.6	2.8	2.9	4.2	4.2	—	2.0
A 41 3_324.2	324.2	0.10	1.6	1.6	2.8	2.9	4.2	4.2	—	2.0
A 41 3_376.8	376.8	0.10	1.6	1.6	2.8	2.9	4.2	4.2	—	2.0

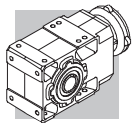

A 41

	i	J (•10-4) [kgm2]																	
		SERVO																	
		60A		60B 80A		80B		95A		80C 95B 110A		95C 110B		130A		130B 180A		180B	
		SK	SC	SK	SC	SK	SC	SK	SC	SK	SC	SK	SC	SK	SC	SK	SC	SK	SC
A 41 2_5.2	5.2	—	—	—	—	—	—	—	—	16	16.5	16	17	16	17	30	32	32	37
A 41 2_7.1	7.1	—	—	—	—	—	—	—	—	10	10.5	10	11	10	11	24	27	26	31
A 41 2_8.3	8.3	—	—	—	—	—	—	—	—	8.8	9.3	8.7	9.7	8.7	9.7	23	25	25	30
A 41 2_9.2	9.2	—	—	—	—	—	—	—	—	7.4	7.9	7.3	8.3	7.3	8.3	21	24	23	28
A 41 2_10.1	10.1	—	—	—	—	—	—	—	—	8.8	9.3	8.7	9.7	8.7	9.7	23	25	25	30
A 41 2_11.7	11.7	—	—	—	—	5.7	6.2	5.7	6.2	5.8	6.3	5.7	6.7	5.7	6.7	20	22	22	27
A 41 2_13.8	13.8	—	—	—	—	—	—	—	—	6.5	7.0	6.4	7.4	6.4	7.4	21	23	23	28
A 41 2_16.1	16.1	—	—	—	—	—	—	—	—	5.8	6.3	5.7	6.7	5.7	6.7	20	22	22	27
A 41 2_17.8	17.8	—	—	—	—	—	—	—	—	5.1	5.6	5.0	6.0	5.0	6.0	19	22	21	26
A 41 2_22.7	22.7	—	—	—	—	4.3	4.8	4.3	4.8	4.4	4.9	4.3	5.3	4.3	5.3	18	21	20	25
A 41 2_28.3	28.3	—	—	—	—	3.9	4.4	3.9	4.4	4.0	4.5	3.9	4.9	3.9	4.9	18	21	20	25
A 41 2_35.9	35.9	—	—	—	—	4.5	5.0	4.5	5.0	4.6	5.1	4.5	5.5	4.5	5.5	19	21	20	25
A 41 2_45.1	45.1	—	—	—	—	4.3	4.8	4.3	4.8	4.4	4.9	4.3	5.3	4.3	5.3	18	21	20	25
A 41 2_48.3	48.3	—	—	—	—	4.2	4.7	4.2	4.7	4.3	4.8	4.2	5.2	4.2	5.2	—	—	—	—
A 41 2_53.1	53.1	—	—	—	—	4.2	4.7	4.2	4.7	4.3	4.8	4.2	5.2	4.2	5.2	—	—	—	—
A 41 2_58.8	58.8	—	—	—	—	4.1	4.6	4.1	4.6	4.2	4.7	4.1	5.1	4.1	5.1	—	—	—	—
A 41 2_64.2	64.2	—	—	—	—	4.1	4.6	4.1	4.6	4.2	4.7	4.1	5.1	4.1	5.1	—	—	—	—
A 41 2_71.3	71.3	—	—	—	—	4.0	4.5	4.0	4.5	4.1	4.6	4.0	5.0	4.0	5.0	—	—	—	—
A 41 2_79.2	79.2	—	—	—	—	4.0	4.5	4.0	4.5	4.1	4.6	4.0	5.0	4.0	5.0	—	—	—	—
A 41 3_92.8	92.8	1.4	1.6	1.4	1.8	—	—	3.9	4.4	4.0	4.5	3.9	4.9	—	—	—	—	—	—
A 41 3_115.9	115.9	0.47	0.73	0.49	0.93	—	—	3.0	3.5	2.9	3.4	3.0	4.0	—	—	—	—	—	—
A 41 3_146.9	146.9	0.37	0.63	0.39	0.83	—	—	2.9	3.4	2.8	3.3	2.9	3.9	—	—	—	—	—	—
A 41 3_184.4	184.4	0.37	0.63	0.39	0.83	—	—	2.9	3.4	2.8	3.3	2.9	3.9	—	—	—	—	—	—
A 41 3_197.5	197.5	0.37	0.63	0.39	0.83	—	—	2.9	3.4	2.8	3.3	2.9	3.9	—	—	—	—	—	—
A 41 3_217.4	217.4	0.37	0.63	0.39	0.83	—	—	2.9	3.4	2.8	3.3	2.9	3.9	—	—	—	—	—	—
A 41 3_240.6	240.6	0.37	0.63	0.39	0.83	—	—	2.9	3.4	2.8	3.3	2.9	3.9	—	—	—	—	—	—
A 41 3_262.5	262.5	0.37	0.63	0.39	0.83	—	—	2.9	3.4	2.8	3.3	2.9	3.9	—	—	—	—	—	—
A 41 3_291.7	291.7	0.37	0.63	0.39	0.83	—	—	2.9	3.4	2.8	3.3	2.9	3.9	—	—	—	—	—	—
A 41 3_324.2	324.2	0.37	0.63	0.39	0.83	—	—	2.9	3.4	2.8	3.3	2.9	3.9	—	—	—	—	—	—
A 41 3_376.8	376.8	0.37	0.63	0.39	0.83	—	—	2.9	3.4	2.8	3.3	2.9	3.9	—	—	—	—	—	—

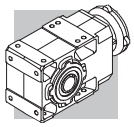

A 50

	i	J (•10-4) [kgm2]										
			IEC									
			63	71	80	90	100	112	132	160	180	
A 50 2_7.7	7.7	15	—	—	18	18	19	19	34	93	91	24
A 50 2_9.7	9.7	10	—	—	13	13	14	14	29	89	86	19
A 50 2_13.1	13.1	6.3	—	—	9.2	9.1	10	10	25	85	82	15
A 50 2_16.6	16.6	4.2	—	—	7.0	7.0	8.2	8.2	23	82	80	13
A 50 2_20.9	20.9	2.8	4.2	4.2	5.7	5.6	6.9	6.9	22	81	79	12
A 50 3_24.0	24.0	6.0	—	—	8.9	8.8	10	10	25	84	82	15
A 50 3_26.4	26.4	5.8	—	—	8.7	8.6	9.9	9.9	25	84	82	15
A 50 3_32.4	32.4	4.0	—	—	6.8	6.8	8.1	8.1	23	82	80	13
A 50 3_35.6	35.6	3.9	—	—	6.7	6.7	8.0	8.0	23	82	80	13
A 50 3_40.9	40.9	2.7	—	—	5.6	5.5	6.8	6.8	22	81	79	12
A 50 3_45.0	45.0	2.6	—	—	5.5	5.4	6.7	6.7	22	81	79	12
A 50 3_51.7	51.7	1.9	3.4	3.4	4.7	4.7	6.0	6.0	21	80	78	11
A 50 3_56.8	56.8	1.9	3.3	3.3	4.7	4.6	5.9	5.9	21	80	78	11
A 50 3_63.9	63.9	1.4	2.9	2.8	4.2	4.2	5.5	5.5	20	80	77	11
A 50 3_70.2	70.2	1.4	2.8	2.8	4.2	4.1	5.4	5.4	20	80	77	10
A 50 3_81.5	81.5	0.90	2.4	2.4	3.8	3.7	5.0	5.0	20	79	77	10
A 50 3_89.5	89.5	0.90	2.4	2.4	3.7	3.7	5.0	5.0	20	79	77	10
A 50 3_99.5	99.5	0.60	2.1	2.1	3.5	3.4	4.7	4.7	20	79	77	9.7
A 50 3_109.4	109.4	0.60	2.1	2.1	3.5	3.4	4.7	4.7	20	79	77	9.7
A 50 3_118.0	118.0	0.50	2.0	2.0	3.4	3.3	4.6	4.6	—	—	—	9.6
A 50 3_129.7	129.7	0.50	2.0	2.0	3.4	3.3	4.6	4.6	—	—	—	9.6
A 50 3_140.6	140.6	0.40	1.8	1.8	3.2	3.2	4.4	4.4	—	—	—	9.4
A 50 3_154.6	154.6	0.40	1.8	1.8	3.2	3.2	4.4	4.4	—	—	—	9.4
A 50 3_173.4	173.4	0.30	1.7	1.7	3.1	3.0	4.3	4.3	—	—	—	9.3
A 50 3_190.6	190.6	0.20	1.7	1.7	3.1	3.0	4.3	4.3	—	—	—	9.3

对于**4**级传动减速机的转动惯量，请咨询我司技术部门。

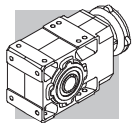

A 50

	i	J (•10-4) [kgm2] SERVO									
		80B 95A		80C 95B 110A		95C 110B 130A		130B 180A		180B	
		SK	SC	SK	SC	SK	SC	SK	SC	SK	SC
A 50 2_7.7	7.7	—	—	18	19	18	19	32	34	34	39
A 50 2_9.7	9.7	—	—	13	14	13	14	27	29	29	34
A 50 2_13.1	13.1	—	—	9.2	9.7	9.1	10	23	26	25	30
A 50 2_16.6	16.6	—	—	7.0	7.5	7.0	8.0	21	24	23	28
A 50 2_20.9	20.9	5.6	6.1	5.7	6.2	5.6	6.6	20	22	22	27
A 50 3_24.0	24.0	—	—	8.9	9.4	8.8	9.8	23	25	25	30
A 50 3_26.4	26.4	—	—	8.7	9.2	8.6	9.6	23	25	25	30
A 50 3_32.4	32.4	—	—	6.8	7.3	6.8	7.8	21	23	23	28
A 50 3_35.6	35.6	—	—	6.7	7.2	6.7	7.7	21	23	23	28
A 50 3_40.9	40.9	—	—	5.6	6.1	5.5	6.5	20	22	22	27
A 50 3_45.0	45.0	—	—	5.5	6.0	5.4	6.4	20	22	22	27
A 50 3_51.7	51.7	4.7	5.1	4.7	5.2	4.7	5.7	19	21	21	26
A 50 3_56.8	56.8	4.7	5.1	4.7	5.2	4.6	5.6	19	21	21	26
A 50 3_63.9	63.9	4.2	4.7	4.2	5.2	4.2	5.2	18	21	20	25
A 50 3_70.2	70.2	4.2	4.7	4.2	5.2	4.1	5.1	18	21	20	25
A 50 3_81.5	81.5	3.7	4.1	3.8	4.3	3.7	4.7	18	20	20	25
A 50 3_89.5	89.5	3.7	4.1	3.7	4.2	3.7	4.7	18	20	20	25
A 50 3_99.5	99.5	3.4	3.9	3.5	4.0	3.4	4.4	18	20	20	25
A 50 3_109.4	109.4	3.4	3.9	3.5	4.0	3.4	4.4	18	20	20	25
A 50 3_118.0	118.0	3.3	3.8	3.4	4.0	3.3	4.3	—	—	—	—
A 50 3_129.7	129.7	3.3	3.8	3.4	4.0	3.3	4.3	—	—	—	—
A 50 3_140.6	140.6	3.2	3.7	3.2	3.7	3.2	4.2	—	—	—	—
A 50 3_154.6	154.6	3.2	3.7	3.2	3.7	3.2	4.2	—	—	—	—
A 50 3_173.4	173.4	3.1	3.6	3.1	3.6	3.0	4.0	—	—	—	—
A 50 3_190.6	190.6	3.0	3.5	3.1	3.6	3.0	4.0	—	—	—	—

对于4级传动减速机的转动惯量，请咨询我司技术部门。

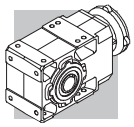

A 55

	i	J (•10-4) [kgm2]									
			IEC								
			63	71	80	90	100	112	132	160	180	
A 55 2_4.9	4.9	61	—	—	—	—	—	—	77	123	120	70
A 55 2_6.4	6.4	41	—	—	—	—	—	—	57	103	100	50
A 55 2_8.5	8.5	26	—	—	—	—	—	—	42	88	85	35
A 55 2_10.4	10.4	19	—	—	—	—	—	—	35	81	78	28
A 55 2_13.1	13.1	12	—	—	14	14	17	17	28	74	72	21
A 55 2_15.7	15.7	8.9	—	—	11	11	14	14	25	71	68	18
A 55 2_19.2	19.2	6.2	—	—	8.6	8.5	11	11	23	68	66	15
A 55 3_23.8	23.8	11	—	—	13	13	16	16	27	73	70	20
A 55 3_29.9	29.9	7.9	—	—	10	10	13	13	24	70	67	17
A 55 3_40.3	40.3	5.3	—	—	7.8	7.6	10	10	22	68	65	14
A 55 3_51.0	51.0	3.6	—	—	6.0	5.9	8.6	8.6	20	66	63	13
A 55 3_64.3	64.3	2.6	3.1	3.0	5.1	5.0	7.7	7.7	19	65	62	12
A 55 3_79.5	79.5	2.0	2.4	2.4	4.5	4.4	7.1	7.1	18	64	62	11
A 55 3_101.4	101.4	1.3	1.8	1.8	3.8	3.7	6.5	6.5	18	64	61	10
A 55 3_123.9	123.9	1.0	1.5	1.5	3.6	3.4	6.2	6.2	17	63	61	10
A 55 3_132.7	132.7	0.71	1.4	1.4	3.5	3.3	6.1	6.1	—	—	—	9.5
A 55 3_146.8	146.8	0.66	1.4	1.4	3.4	3.3	6.0	6.0	—	—	—	9.4
A 55 3_160.4	160.4	0.58	1.3	1.3	3.3	3.2	6.0	6.0	—	—	—	9.4
A 55 3_175.0	175.0	0.50	1.2	1.2	3.3	3.1	5.9	5.9	—	—	—	9.3
A 55 3_194.2	194.2	0.43	1.2	1.2	3.2	3.1	5.8	5.8	—	—	—	9.2

对于**4**级传动减速机的转动惯量，请咨询我司技术部门。

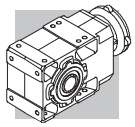

A 55

	i	J (•10-4) [kgm2]									
		SERVO									
		80B 95A		80C 95B 110A		95C 110B 130A		130B 180A		180B	
		SK	SC	SK	SC	SK	SC	SK	SC	SK	SC
A 55 2_4.9	4.9	—	—	—	—	—	—	78	80	77	82
A 55 2_6.4	6.4	—	—	—	—	—	—	58	60	57	62
A 55 2_8.5	8.5	—	—	—	—	—	—	43	45	42	47
A 55 2_10.4	10.4	—	—	—	—	—	—	36	38	35	40
A 55 2_13.1	13.1	—	—	14	15	14	15	29	31	28	33
A 55 2_15.7	15.7	—	—	11	12	11	12	26	28	25	30
A 55 2_19.2	19.2	—	—	8.6	9.1	8.5	9.5	23	26	23	28
A 55 3_23.8	23.8	—	—	13	14	13	14	28	30	27	32
A 55 3_29.9	29.9	—	—	10	11	10	11	25	27	24	29
A 55 3_40.3	40.3	—	—	7.8	8.3	7.6	8.6	22	25	22	27
A 55 3_51.0	51.0	—	—	6.0	6.5	5.9	6.9	21	23	20	25
A 55 3_64.3	64.3	5.4	5.9	5.1	5.6	5.0	6.0	20	22	19	24
A 55 3_79.5	79.5	4.8	5.3	4.5	5.0	4.4	5.4	19	21	18	23
A 55 3_101.4	101.4	4.1	4.6	3.8	4.3	3.7	4.7	18	21	18	23
A 55 3_123.9	123.9	3.8	4.3	3.6	4.1	3.4	4.4	18	20	17	22
A 55 3_132.7	132.7	3.5	4.0	3.5	4.0	3.3	4.3	—	—	—	—
A 55 3_146.8	146.8	3.5	3.9	3.4	3.9	3.3	4.3	—	—	—	—
A 55 3_160.4	160.4	3.4	3.8	3.3	3.8	3.2	4.2	—	—	—	—
A 55 3_175.0	175.0	3.3	3.8	3.3	3.8	3.1	4.1	—	—	—	—
A 55 3_194.2	194.2	3.3	3.7	3.2	3.7	3.1	4.1	—	—	—	—

对于4级传动减速机的转动惯量，请咨询我司技术部门。

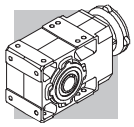

A 60

	i	J (•10-4) [kgm2]									
			IEC								
			63	71	80	90	100	112	132	160	180	
A 60 2_7.9	7.9	36	—	—	—	—	—	—	54	114	112	57
A 60 2_10.3	10.3	23	—	—	25	25	27	27	41	101	99	44
A 60 2_12.7	12.7	16	—	—	19	19	20	20	35	94	92	37
A 60 2_16.7	16.7	9.4	—	—	12	12	14	14	28	88	85	30
A 60 2_20.6	20.6	6.7	—	—	9.6	9.5	11	11	26	85	83	28
A 60 3_25.7	25.7	14	—	—	17	17	18	18	33	92	90	35
A 60 3_27.9	27.9	14	—	—	17	17	18	18	33	92	90	35
A 60 3_31.7	31.7	10	—	—	13	13	15	15	29	89	86	31
A 60 3_34.3	34.3	10	—	—	13	13	14	14	29	89	86	31
A 60 3_41.7	41.7	6.1	—	—	9.0	8.9	10	10	25	84	82	27
A 60 3_45.2	45.2	6.1	—	—	8.9	8.9	10	10	25	84	82	27
A 60 3_51.3	51.3	5.0	—	—	7.4	7.4	8.7	8.7	24	83	81	26
A 60 3_55.6	55.6	4.5	—	—	7.4	7.3	8.6	8.6	23	83	81	26
A 60 3_65.0	65.0	3.2	4.7	4.6	6.1	6.0	7.3	7.3	22	82	79	24
A 60 3_70.4	70.4	3.2	4.7	4.6	6.1	6.0	7.3	7.3	22	81	79	24
A 60 3_79.7	79.7	2.1	3.6	3.5	5.0	4.9	6.2	6.2	21	80	78	23
A 60 3_86.4	86.4	2.1	3.6	3.5	5.0	4.9	6.2	6.2	21	80	78	23
A 60 3_99.5	99.5	2.0	3.5	3.4	4.3	4.3	5.6	5.6	20	80	78	23
A 60 3_107.8	107.8	1.5	3.0	2.9	4.3	4.3	5.6	5.6	20	80	78	22
A 60 3_123.0	123.0	1.1	2.6	2.5	4.0	3.9	5.2	5.2	20	79	77	22
A 60 3_133.3	133.3	1.1	2.6	2.5	3.9	3.9	5.2	5.2	20	79	77	22
A 60 3_144.0	144.0	0.80	2.3	2.2	3.7	3.6	5.0	5.0	—	—	—	22
A 60 3_156.0	156.0	0.80	2.3	2.2	3.7	3.6	5.0	5.0	—	—	—	22
A 60 3_171.5	171.5	0.60	2.1	2.0	3.5	3.4	4.7	4.7	—	—	—	22
A 60 3_185.8	185.8	0.60	2.1	2.0	3.5	3.4	4.7	4.7	—	—	—	22

对于4级传动减速机的转动惯量，请咨询我司技术部门。

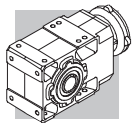

A 60

	i	J (•10-4) [kgm2]									
		SERVO									
		95A		80C 95B 110A		95C 110B 130A		130B 180A		180B	
		SK	SC	SK	SC	SK	SC	SK	SC	SK	SC
A 60 2_7.9	7.9	—	—	—	—	—	—	53	55	54	59
A 60 2_10.3	10.3	—	—	25	26	25	26	40	42	41	46
A 60 2_12.7	12.7	—	—	19	20	19	20	33	35	35	40
A 60 2_16.7	16.7	—	—	12	13	12	13	26	29	28	33
A 60 2_20.6	20.6	—	—	9.6	10	9.5	10	24	26	26	31
A 60 3_25.7	25.7	—	—	17	18	17	18	31	33	33	38
A 60 3_27.9	27.9	—	—	17	18	17	18	31	33	33	38
A 60 3_31.7	31.7	—	—	13	14	13	14	27	29	29	34
A 60 3_34.3	34.3	—	—	13	14	13	14	27	29	29	34
A 60 3_41.7	41.7	—	—	9.0	9.5	8.9	9.9	23	26	25	30
A 60 3_45.2	45.2	—	—	8.9	9.4	8.9	9.9	23	26	25	30
A 60 3_51.3	51.3	—	—	7.4	7.9	7.4	8.4	22	24	24	29
A 60 3_55.6	55.6	—	—	7.4	7.9	7.3	8.3	21	24	23	28
A 60 3_65.0	65.0	6.0	6.5	6.1	6.6	6.0	7.0	20	23	22	27
A 60 3_70.4	70.4	6.0	6.5	6.1	6.6	6.0	7.0	20	23	22	27
A 60 3_79.7	79.7	4.9	5.4	5.0	5.5	4.9	5.9	19	22	21	26
A 60 3_86.4	86.4	4.9	5.4	5.0	5.5	4.9	5.9	19	22	21	26
A 60 3_99.5	99.5	4.8	5.3	4.3	4.8	4.3	5.3	19	21	20	25
A 60 3_107.8	107.8	4.3	4.8	4.3	4.8	4.3	5.3	18	21	20	25
A 60 3_123.0	123.0	3.9	4.4	4.0	4.5	3.9	4.9	18	21	20	25
A 60 3_133.3	133.3	3.9	4.4	3.9	4.4	3.9	4.9	18	21	20	25
A 60 3_144.0	144.0	3.6	4.1	3.7	4.2	3.6	4.6	—	—	—	—
A 60 3_156.0	156.0	3.6	4.1	3.7	4.2	3.6	4.6	—	—	—	—
A 60 3_171.5	171.5	3.4	3.9	3.5	4.0	3.4	4.4	—	—	—	—
A 60 3_185.8	185.8	3.4	3.9	3.5	4.0	3.4	4.4	—	—	—	—

对于4级传动减速机的转动惯量，请咨询我司技术部门。

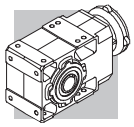

A 70

	i	J (•10-4) [kgm2]											
			IEC										
			80	90	100	112	132	160	180	200	225	250	
A 70 3_9.4	9.4	—	—	—	—	—	—	187	185	194	—	—	150
A 70 3_10.2	10.2	—	—	—	—	—	—	183	180	190	—	—	146
A 70 3_12.1	12.1	—	—	—	—	—	—	150	148	157	—	—	113
A 70 3_13.1	13.1	—	—	—	—	—	—	147	145	154	—	—	111
A 70 3_15.4	15.4	45	—	—	—	—	64	124	121	161	—	—	87
A 70 3_16.7	16.7	44	—	—	—	—	63	122	120	129	—	—	85
A 70 3_19.7	19.7	30	—	—	—	—	49	109	107	—	—	—	72
A 70 3_21.3	21.3	29	—	—	—	—	48	108	106	—	—	—	71
A 70 3_23.5	23.5	—	—	—	—	—	—	116	114	123	—	—	79
A 70 3_27.8	27.8	—	—	—	—	—	—	118	116	125	—	—	81
A 70 3_30.1	30.1	—	—	—	—	—	—	117	115	124	—	—	81
A 70 3_35.4	35.4	26	—	—	—	—	45	104	102	111	—	—	67
A 70 3_38.4	38.4	25	—	—	—	—	44	104	101	111	—	—	67
A 70 3_45.2	45.2	18	—	—	—	—	37	97	94	—	—	—	59
A 70 3_49.0	49.0	18	—	—	—	—	37	96	94	—	—	—	59
A 70 3_53.2	53.2	15	—	—	—	—	34	93	91	—	—	—	56
A 70 3_57.7	57.7	15	—	—	—	—	34	93	91	—	—	—	56
A 70 3_66.9	66.9	9.7	12	12	13	13	29	88	86	—	—	—	51
A 70 3_72.5	72.5	9.6	12	12	13	13	28	88	86	—	—	—	51
A 70 3_79.3	79.3	6.8	9.4	9.3	11	11	26	85	83	—	—	—	48
A 70 3_85.9	85.9	6.7	9.3	9.3	11	11	26	85	83	—	—	—	48
A 70 3_96.2	96.2	5.4	8.2	8.2	9.4	9.4	24	84	82	—	—	—	47
A 70 3_104.2	104.2	5.4	8.2	8.1	9.4	9.4	24	84	81	—	—	—	47
A 70 3_120.6	120.6	3.4	6.2	6.2	7.5	7.5	22	82	79	—	—	—	45
A 70 3_130.7	130.7	3.4	6.2	6.2	7.4	7.4	22	82	79	—	—	—	45
A 70 3_141.9	141.9	2.4	5.3	5.2	6.5	6.5	21	81	78	—	—	—	44
A 70 3_153.7	153.7	2.4	5.2	5.2	6.5	6.5	21	81	78	—	—	—	44

对于4级传动减速机的转动惯量，请咨询我司技术部门。

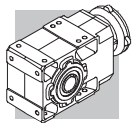

A 80

	i	J (•10-4) [kgm2]											
			IEC										
			80	90	100	112	132	160	180	200	225	250	
A 80 3_9.8	9.8	—	—	—	—	—	—	—	320	333	611	—	286
A 80 3_10.7	10.7	—	—	—	—	—	—	—	309	323	601	—	276
A 80 3_12.3	12.3	—	—	—	—	—	—	239	239	253	531	—	205
A 80 3_13.3	13.3	—	—	—	—	—	—	232	233	246	524	—	199
A 80 3_15.5	15.5	—	—	—	—	—	—	187	185	194	478	—	150
A 80 3_16.7	16.7	—	—	—	—	—	—	183	180	190	474	—	150
A 80 3_19.3	19.3	69	—	—	—	—	88	147	145	154	440	—	111
A 80 3_20.9	20.9	66	—	—	—	—	85	145	142	152	437	—	108
A 80 3_22.6	22.6	—	—	—	—	—	—	—	205	219	496	—	171
A 80 3_24.5	24.5	—	—	—	—	—	—	—	203	217	494	—	169
A 80 3_28.2	28.2	—	—	—	—	—	—	165	166	179	457	—	132
A 80 3_30.6	30.6	—	—	—	—	—	—	164	164	178	456	—	130
A 80 3_35.5	35.5	—	—	—	—	—	—	140	138	147	432	—	104
A 80 3_38.5	38.5	—	—	—	—	—	—	140	137	147	431	—	103
A 80 3_44.5	44.5	39	—	—	—	—	58	118	115	125	410	—	81
A 80 3_48.2	48.2	39	—	—	—	—	58	117	115	124	410	—	90
A 80 3_55.2	55.2	29	—	—	—	—	48	108	105	136	399	—	70
A 80 3_59.8	59.8	29	—	—	—	—	48	107	105	136	399	—	70
A 80 3_66.8	66.8	22	—	—	—	—	41	101	98	128	391	—	63
A 80 3_72.4	72.4	22	—	—	—	—	41	100	98	128	391	—	63
A 80 3_82.3	82.3	15	17	17	18	18	34	94	91	120	384	—	56
A 80 3_89.2	89.2	15	17	17	18	18	34	93	91	120	386	—	56
A 80 3_96.0	96.0	14	16	16	17	17	32	92	90	119	382	—	55
A 80 3_104.0	104.0	13	16	16	17	17	32	92	89	119	382	—	55
A 80 3_116.0	116.0	9.1	12	12	13	13	28	87	85	—	—	—	50
A 80 3_125.6	125.6	9.1	12	12	13	13	28	87	85	—	—	—	50
A 80 3_144.7	144.7	5.4	8.3	8.2	10	10	24	84	82	—	—	—	47
A 80 3_156.8	156.8	5.4	3.0	2.9	4.2	4.2	19	78	76	—	—	—	41

对于4级传动减速机的转动惯量，请咨询我司技术部门。

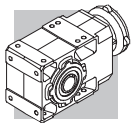

A 90

	i	J (•10-4) [kgm2]										
			IEC									
			80	90	100	112	132	160	180	200	225	250	
A 90 3_9.7	9.7	—	—	—	—	—	—	—	597	611	889	918	898
A 90 3_10.5	10.5	—	—	—	—	—	—	—	575	589	867	896	876
A 90 3_12.6	12.6	—	—	—	—	—	—	—	402	416	693	723	703
A 90 3_13.7	13.7	—	—	—	—	—	—	—	389	403	681	710	690
A 90 3_15.6	15.6	—	—	—	—	—	—	—	306	319	597	627	607
A 90 3_16.9	16.9	—	—	—	—	—	—	—	297	311	589	618	598
A 90 3_19.4	19.4	—	—	—	—	—	—	236	234	243	527	559	530
A 90 3_21.0	21.0	—	—	—	—	—	—	231	228	238	522	553	524
A 90 3_22.3	22.3	—	—	—	—	—	—	—	326	340	618	647	627
A 90 3_24.1	24.1	—	—	—	—	—	—	—	322	336	614	643	623
A 90 3_29.1	29.1	—	—	—	—	—	—	—	243	257	535	564	544
A 90 3_31.5	31.5	—	—	—	—	—	—	—	241	254	532	562	542
A 90 3_35.8	35.8	—	—	—	—	—	—	—	201	215	493	522	502
A 90 3_38.8	38.8	—	—	—	—	—	—	—	200	213	491	521	500
A 90 3_44.6	44.6	—	—	—	—	—	—	169	166	176	460	491	462
A 90 3_48.3	48.3	—	—	—	—	—	—	168	165	175	459	490	461
A 90 3_55.0	55.0	66	—	—	—	—	85	144	142	151	437	468	438
A 90 3_59.6	59.6	66	—	—	—	—	84	144	141	151	436	468	437
A 90 3_68.8	68.8	48	—	—	—	—	67	126	124	154	418	449	416
A 90 3_74.5	74.5	47	—	—	—	—	66	126	123	154	417	449	416
A 90 3_80.4	80.4	43	—	—	—	—	62	121	119	149	412	443	412
A 90 3_87.1	87.1	43	—	—	—	—	62	121	119	148	412	443	412
A 90 3_98.6	98.6	28	30	30	32	32	47	106	104	134	397	428	399
A 90 3_106.8	106.8	28	30	30	31	31	47	106	104	133	397	428	399
A 90 3_116.9	116.9	23	25	25	26	26	41	101	99	128	391	423	394
A 90 3_126.6	126.6	22	25	25	26	26	41	101	98	128	391	422	394
A 90 3_139.4	139.4	15	17	17	19	19	33	93	91	—	—	—	386
A 90 3_151.0	151.0	14	3.0	3.0	4.3	4.3	19	79	76	—	—	—	372

对于4级传动减速机的转动惯量，请咨询我司技术部门。

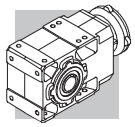

42 精确速比

i_N	A 05	A 10	A 20	A 30	A 35	A 41	A 50	A 55	A 60	A 70	A 80	A 90
5.0								4.94505				
5.6	5.46559	5.46559	5.35117	5.41311	5.41311	5.24476						
6.3	6.33484	6.33484	6.53846	6.41026	6.41026			6.41026				
7.1	7.21154	7.21154	7.28745	7.02341	7.02341	7.12251						
8.0	8.51648	8.51648	8.37104	8.46154	8.46154	8.33333	7.73684	8.46154	7.86420			
9.0	9.61538	9.61538	9.37500	9.31174	9.31174	9.19732				9.43946		9.67545
10.0	10.55639	10.55639	10.33540	10.45503	10.63348	10.12987	9.73401	10.35503	10.31579	10.22609	9.83278	10.48174
11.2				11.77885	11.77885	11.74089				12.08027	10.65217	12.64214
12.5	12.30769	12.30769	11.96581		13.06878		13.10700	13.07692	12.70370	13.08696	12.27130	13.69565
14.0	13.92857	13.92857	14.07519	13.56522	15.47619	13.75661				15.40468	13.29391	15.57512
16.0	16.44898	16.44898	16.16807	16.34286	16.95652	16.09524	16.57005	15.68047	16.73663	16.68841	15.45151	16.87304
18.0	18.57143	18.57143	18.10714	17.98496		17.76398					19.33779	19.38462
20.0	21.35714	21.35714	21.22449	20.53782	20.42857		20.91813	19.23077	20.5942	19.66555	20.94928	21.00000
22.4	23.77143	23.77143	23.11111	22.75000	22.48120	22.67669				21.30435	22.61538	22.25354
25.0	25.46939	25.46939	26.46429	26.53061	25.67227		24.04795	23.79021	25.71012	23.52000	24.50000	24.10800
28.0	28.57143	28.57143	29.21905	29.30159	28.43750	28.32143	26.43733		27.85263	27.78462	28.22400	29.07692
31.5	32.19048	32.19048	31.30612	33.42857	33.16327		32.38095	29.93134	31.66154	30.10000	30.57600	31.50000
35.5	35.11688	35.11688	35.42857	36.64762	36.62698	35.90476	35.59829		34.30000	35.43077	35.53846	35.82277
40.0	40.85714	40.85714	39.61905	39.26531	41.78571	45.06667	40.93645	40.30303	41.71282	38.38333	38.50000	38.80800
45.0	45.39683	45.39683	43.22078	43.42857	45.80952	48.28571	45.00386		45.18889	45.23077	44.47692	44.58462
50.0	51.25714	51.25714	48.28571	48.28571	49.08163	53.14286	51.67843	50.95166	51.32709	49.00000	48.18333	48.30000
56.0	58.60317	58.60317	53.65079	52.67532	54.28571	58.80952	56.81314		55.60435	53.23314	55.18154	55.03077
63.0	65.92857	65.92857	63.14286	59.42857	60.35714	64.15584	63.89011	64.32168	64.98947	66.94154	66.80237	59.61667
71.0			70.98413	66.03175	65.84416	71.31429	70.23817		70.40526	72.52000	72.36923	68.75077
80.0	76.40816	76.40816	79.85714	76.51429	74.28571	79.23810	81.45055	79.52098	79.71923	79.32781	82.32000	80.37160
90.0	91.61905	91.61905	92.32653	86.66667	82.53968	92.76828	89.54339		86.36250	85.93846	89.18000	87.06923
100.0				97.50000	95.64286		99.53407	101.37762	99.50769	96.21818	104.03077	98.60308
112.2			109.16518	109.07029	105.54155	115.86039	109.42367	123.88531	107.80000	104.23636	115.95524	116.90414
125.0			120.52857	120.46208	116.90972		129.67046	132.73427	123.02769	120.61538	125.61818	126.64615
140.0			146.14286	137.42857	136.33787	146.88312	140.61938	146.80796	144.04260	141.86014	144.73846	139.39301
160.0			163.42857	161.42404	150.57760		154.59118	160.43706	171.46573	169.75499	156.80000	166.12694
180.0			178.28571	178.53968	171.78571	184.36364	173.36264	175.02225	185.75455	183.90123	171.29752	179.97085
200.0			199.17857	198.50794	201.78005	197.53247	190.58777	194.19860	208.73017		214.73193	209.01044
225.0			221.30952	216.55411	223.17460	217.40260	231.98700	208.05260	226.12435	220.25418	232.62626	226.42797
250.0			260.46429	244.31746	248.13492	240.58442	260.88462		264.29053	238.60870		
280.0			292.80952	271.46384	270.69264	291.74026	286.80584	262.64685	286.31474	292.01619	277.28428	281.43590
315.0			329.41071	314.55873	305.39683	324.15584	332.58974		324.19154	316.35088	300.39130	304.88889
355.0				356.29630	339.32981	376.83117	365.63552	324.71066	351.20750	369.38462	353.96864	355.79521
400.0			380.84694	400.83333	393.19841		406.43077		404.66462	400.16667	383.46603	385.44482
450.0							446.81331	413.95862	438.38667	475.76068	442.07937	449.15802
500.0							481.63314	505.86503	500.31262	515.40741	478.91932	486.58785
560.0							574.19580	541.99825	585.77325	595.03590	560.45035	555.29467
630.0							631.24731	655.11801	634.58769	644.62222	607.15455	601.56923
710.0							707.89744	714.67419	697.29399	705.13609	703.46182	707.91953
800.0							778.23340	792.97762	755.40182	855.27273	829.52598	766.91282
900.0										926.54545	898.65315	865.09065
1000.0										1072.13675	1001.43166	1025.1594
1125.0										1161.48148	1084.88430	1110.58935
1250.0										1242.33846	1236.85594	1222.17967
1400.0										1345.86667	1339.92727	1324.02797
1600.0										1583.07692	1557.66545	1506.76450
1800.0										1715.00000		1632.32821

2x 3x 4x

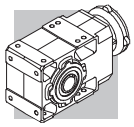

43 尺寸

A 05...M/ME/MX

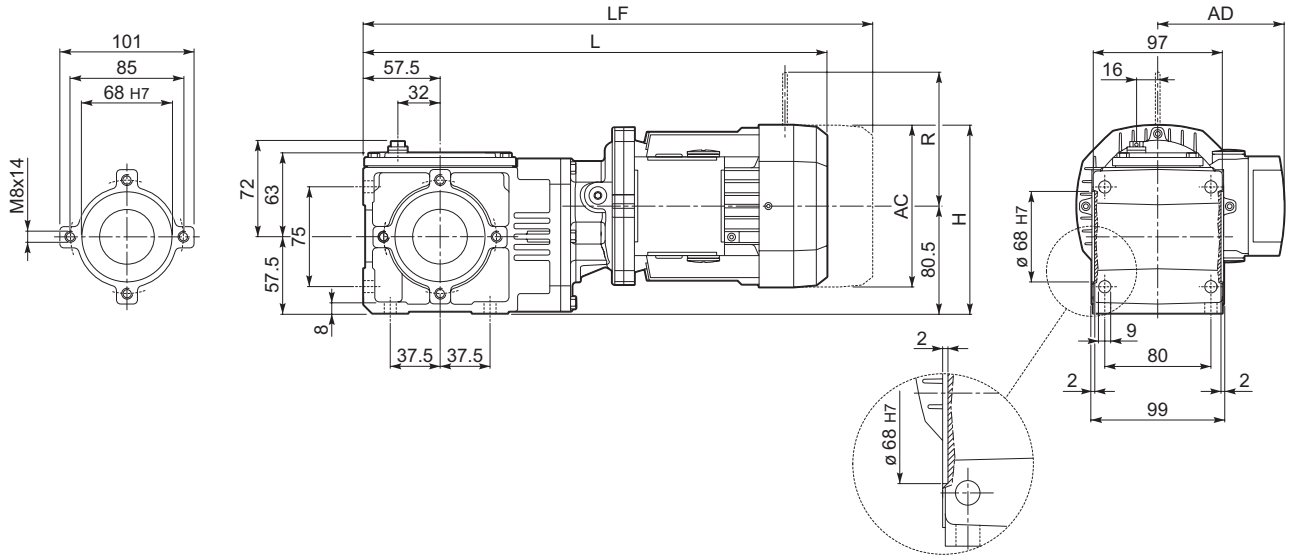

								M...FD M...FA		M...FD		M...FA	
			AC	H	L	AD	Kg	LF	Kg	R	AD	R	AD
A 05 2	**S05**	**M05**	121	141	360.5	95	7.5	426.5	9	96	122	116	95
A 05 2	**S1**	**M1**	138	149.5	389.5	108	11.5	450.5	14	103	135	124	108
A 05 2	**S2**	**ME2S**	156	158.5	418.5	119	15.5	—	—	—	—	—	—
A 05 2	**S2**	**MX2S**	156	158.5	452.5	119	20.6	—	—	—	—	—	—

A 05...P(IEC)

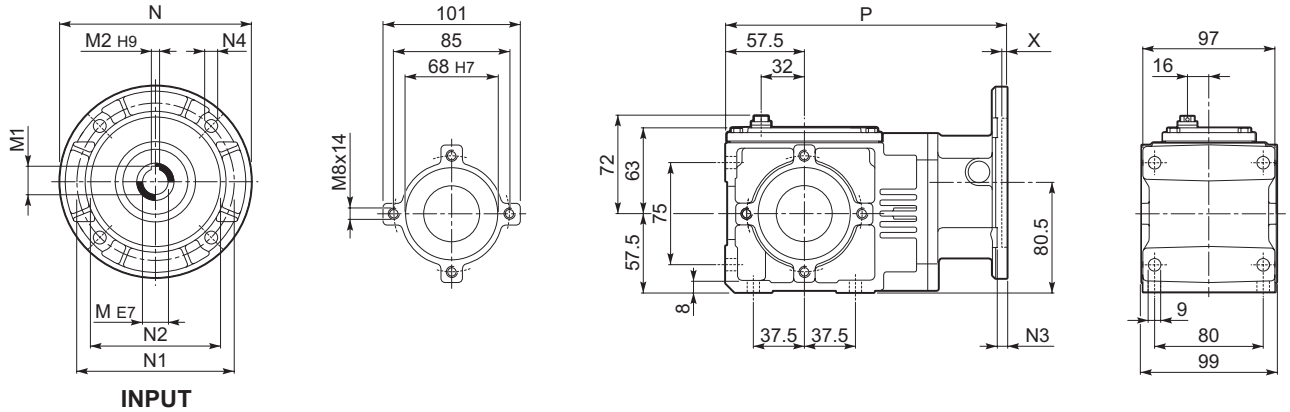

		M	M1	M2	N	N1	N2	N3	N4	X	P	Kg
A 05 2	**P63**	11	12.8	4	140	115	95	7	9.5	3.5	206	5
A 05 2	**P71**	14	16.3	5	160	130	110	7	9.5	4	213	5
A 05 2	**P80**	19	20.8	6	200	165	130	7	11.5	4	223	5.5

邦飞利特制的（薄）平键

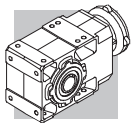

A 05...SK / SC

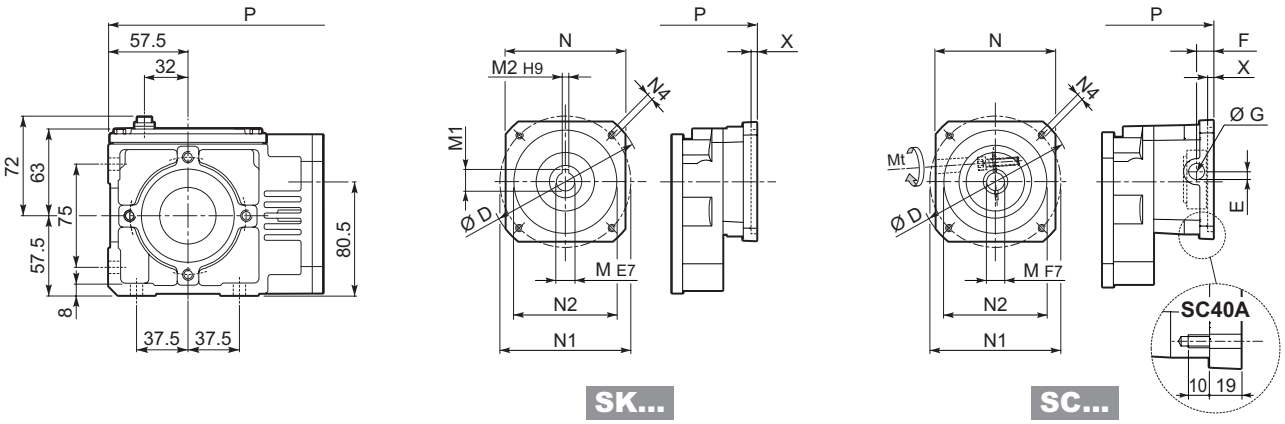

		D	M	M1	M2	N	N1	N2	N4	X	P	Kg
A 05 2	**SK40A**	74	9	10.4	3	55	63	40	M5x10	3	207.5	5
A 05 2	**SK60A**	102	11	12.8	4	82	75	60	M5x10	3.5	206	5
A 05 2	**SK60B**	102	14	16.3	5	82	75	60	M5x10	4	213	5
A 05 2	**SK80A**	115	14	16.3	5	90	100	80	M6x12	4	213	5

			Mt [Nm]	D	E	F	G	M	N	N1	N2	N4	X	P	Kg
A 05 2	**SC40A**	M5	15	74	10.5	9.5	12.5	9	55	63	40	M5x10	3	226.5	6
A 05 2	**SC60A**	M6	15	102	7	12.5	12.5	11	82	75	60	M5x10	4	233	6
A 05 2	**SC60B**	M6	15	102	7	12.5	12.5	14	82	75	60	M5x10	4	233	6
A 05 2	**SC80A**	M6	15	115	6	12.5	12.5	14	90	100	80	M6x12	4	233	6

A 05...F...

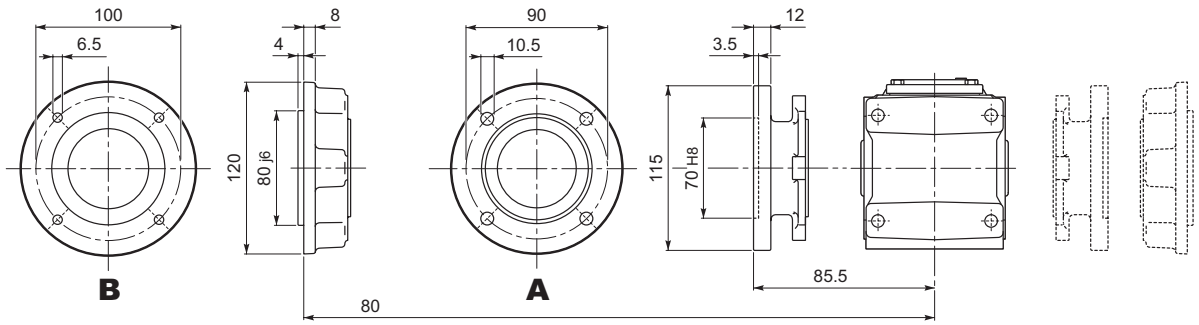

A 05

A 05...UR

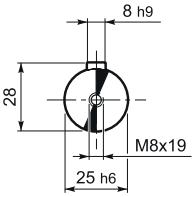

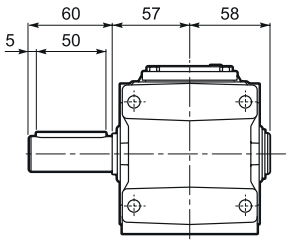

A 05...UD

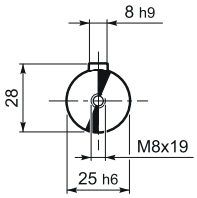

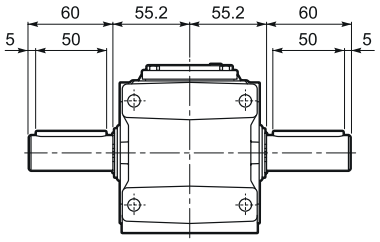

A 05...UH

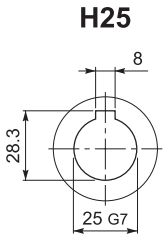

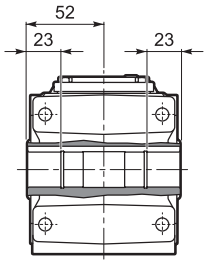

A 05...US

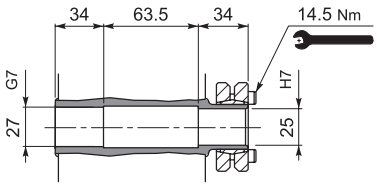

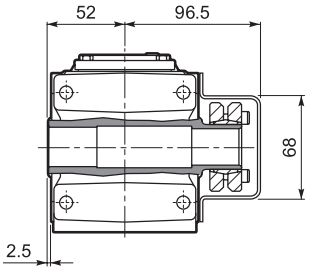

A 10...M/ME/MX

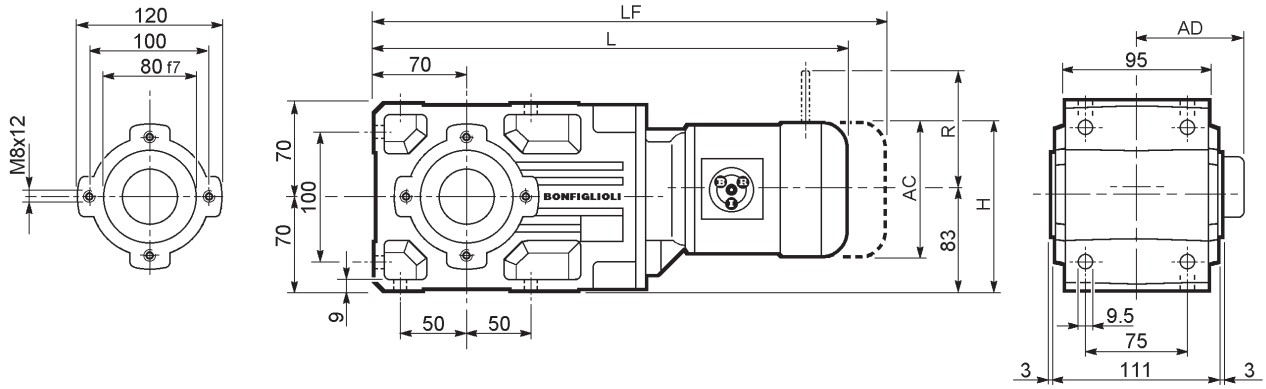

								M...FD M...FA		M...FD		M...FA	
			AC	H	L	AD	Kg	LF	Kg	R	AD	R	AD
A 10 2	**S05**	**M05**	121	143.5	408.5	95	12	474.5	14	96	122	116	95
A 10 2	**S1**	**M1**	138	152	437.5	108	14	498.5	17	103	135	124	108
A 10 2	**S2**	**ME2S**	156	161	466.5	119	18	—	—	—	—	—	—
A 10 2	**S2**	**MX2S**	156	161	510.5	119	23.1	—	—	—	—	—	—
A 10 2	**S3**	**ME3S**	195	180.5	509.5	142	24.5	—	—	—	—	—	—
A 10 2	**S3**	**MX3S**	195	180.5	541.5	142	27.5	—	—	—	—	—	—
A 10 2	**S3**	**ME3L**	195	180.5	541.5	142	30	—	—	—	—	—	—
A 10 2	**S3**	**MX3L**	195	180.5	585.5	142	36	—	—	—	—	—	—

A 10...P(IEC)

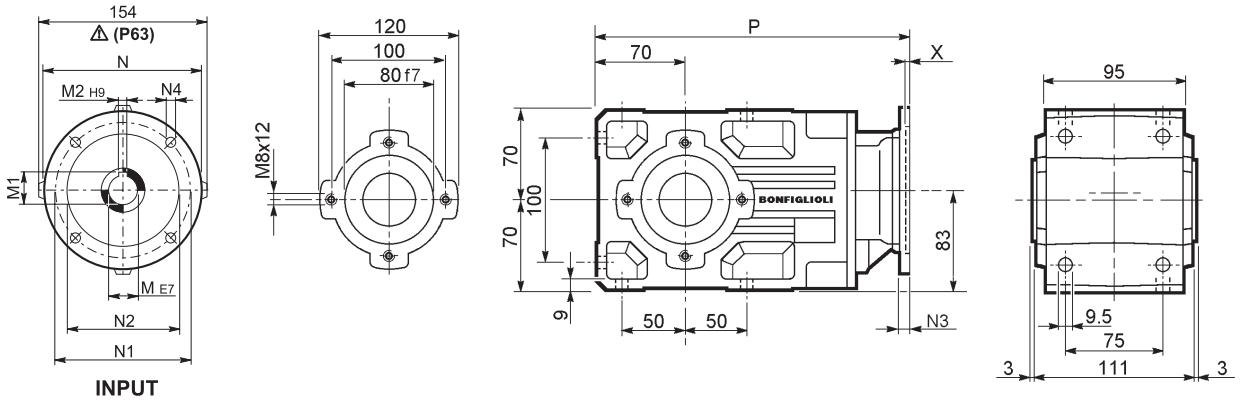

		M	M1	M2	N	N1	N2	N3	N4	X	P	Kg
A 10 2	**P63**	11	12.8	4	140	115	95	—	M8x10	4	282.5	8
A 10 2	**P71**	14	16.3	5	160	130	110	—	M8x10	4.5	282.5	9
A 10 2	**P80**	19	21.8	6	200	165	130	—	M10x14.5	4	302	9
A 10 2	**P90**	24	27.3	8	200	165	130	—	M10x14.5	4	302	9
A 10 2	**P100**	28	31.3	8	250	215	180	—	M12x16	4.5	312	13
A 10 2	**P112**	28	31.3	8	250	215	180	—	M12x16	4.5	312	13

A 10...HS

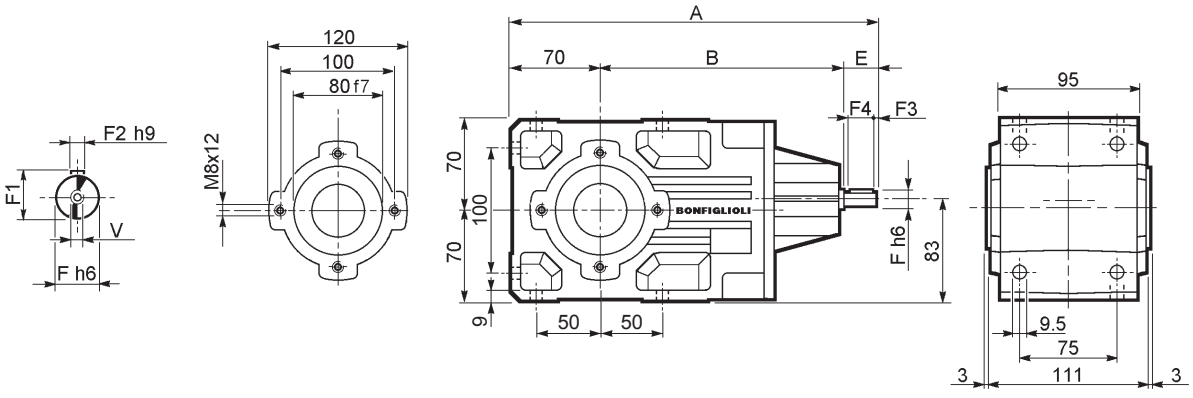

		A	B	E	F	F1	F2	F3	F4	V	Kg
A 10 2	**HS**	289.5	179.5	40	16	18	5	2.5	35	M6x16	7.8

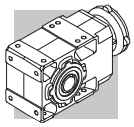

A 10...SK / SC

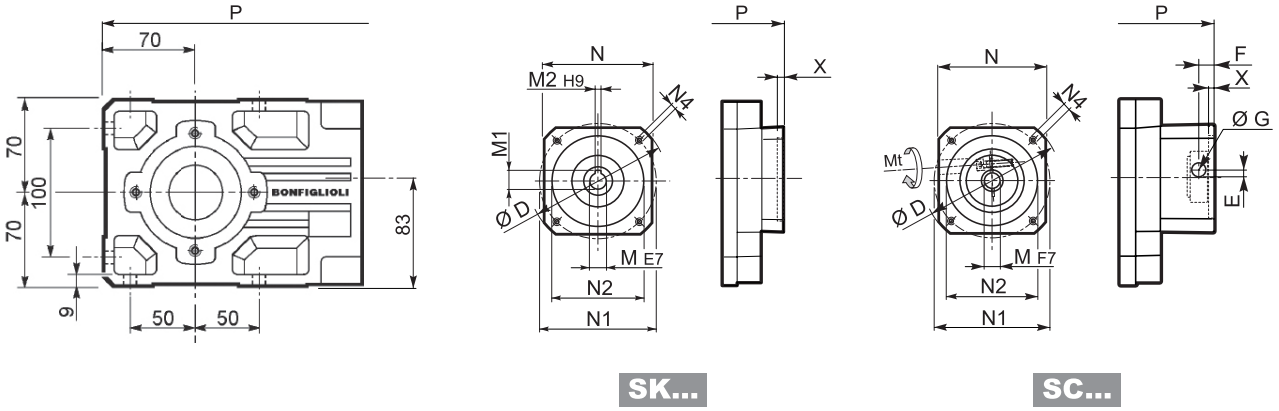

		D	M	M1	M2	N	N1	N2	N4	X	P	Kg
A 10 2	**SK60A**	102	11	12.8	4	82	75	60	M5x10	3.5	254	8
A 10 2	**SK60B**	102	14	16.3	5	82	75	60	M5x10	4	261	8
A 10 2	**SK80A**	115	14	16.3	5	90	100	80	M6x12	4	261	8
A 10 2	**SK80C**	120	19	21.8	6	96	100	80	M6x12	4	302	9
A 10 2	**SK95A**	130	14	16.3	5	102	115	95	M8x12	4	302	9
A 10 2	**SK95B**	130	19	21.8	6	102	115	95	M8x12	4	302	9
A 10 2	**SK95C**	130	24	27.3	8	102	115	95	M8x12	4	302	9
A 10 2	**SK110A**	150	19	21.8	6	120	130	110	M8x12	5	302	9
A 10 2	**SK110B**	150	24	27.3	8	120	130	110	M8x12	5	302	9

			Mt [Nm]	D	E	F	G	M	N	N1	N2	N4	X	P	Kg
A 10 2	**SC60A**	M6	15	102	7	12.5	12.5	11	82	75	60	M5x10	4	281	9
A 10 2	**SC60B**	M6	15	102	7	12.5	12.5	14	82	75	60	M5x10	4	281	9
A 10 2	**SC80A**	M6	15	115	6	12.5	12.5	14	90	100	80	M6x12	4	281	9
A 10 2	**SC80C**	M6	15	120	15.5	14.5	17.75	19	96	100	80	M6x12	4	325.5	10
A 10 2	**SC95A**	M6	15	130	16.5	15	17.75	14	102	115	95	M8x16	4	325.5	10
A 10 2	**SC95B**	M6	15	130	16.5	15	17.75	19	102	115	95	M8x16	4	325.5	10
A 10 2	**SC95C**	M6	15	130	16.5	15	17.75	24	102	115	95	M8x16	4	325.5	10
A 10 2	**SC110A**	M6	15	150	16.5	16	17.75	19	120	130	110	M8x16	5	325.5	12
A 10 2	**SC110B**	M6	15	150	16.5	16	17.75	24	120	130	110	M8x16	5	325.5	12

A 10...F...

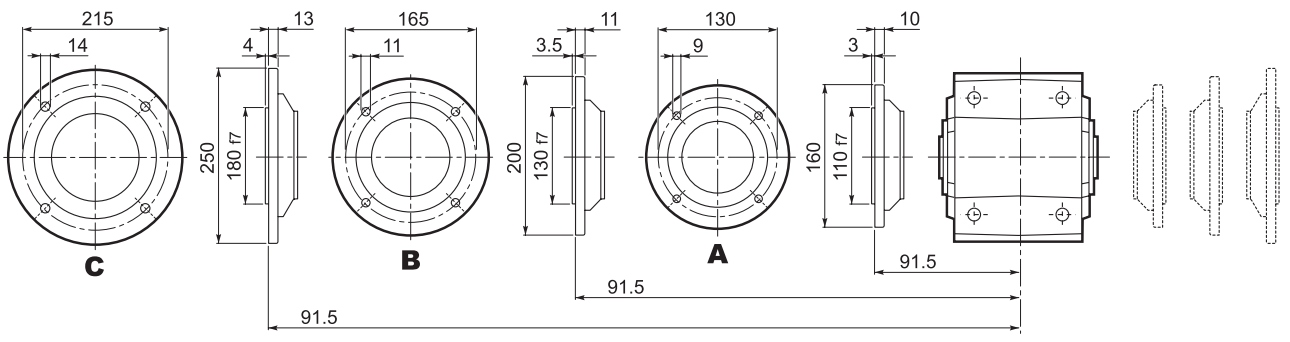

Bonfiglioli Riduttori

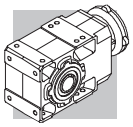

A 10

A 10...UR

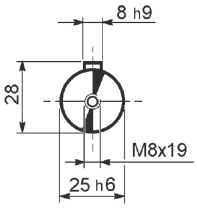

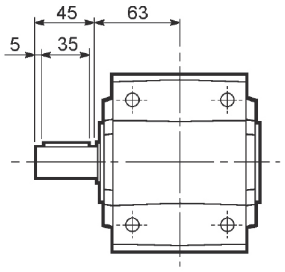

A 10...UD

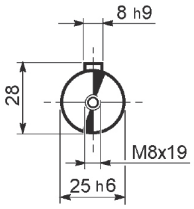

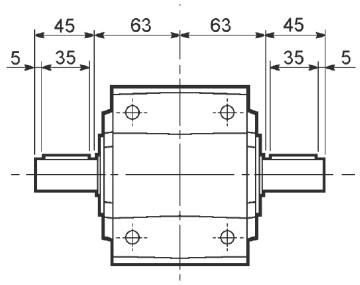

A 10...UH

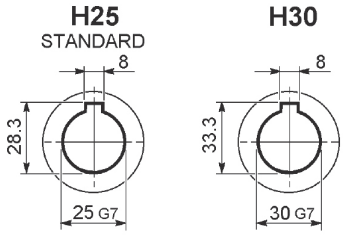

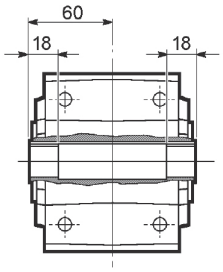

A 10...US

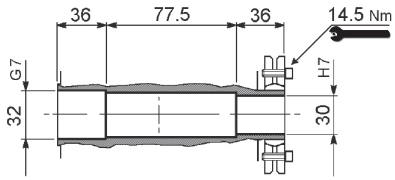

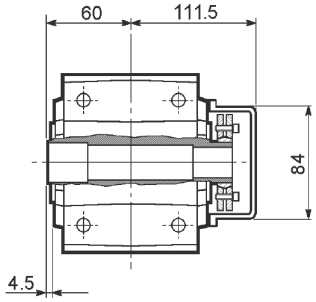

A10...QF

	Ø
QF25	25
QF30	30

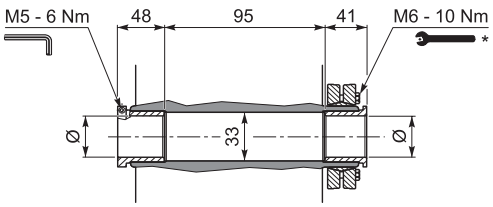

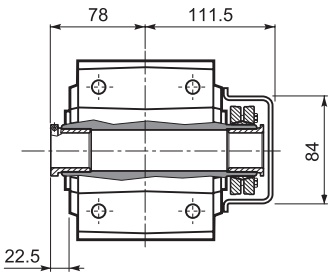

详细安装指南见随机文件

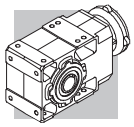

A 20...M/ME/MX

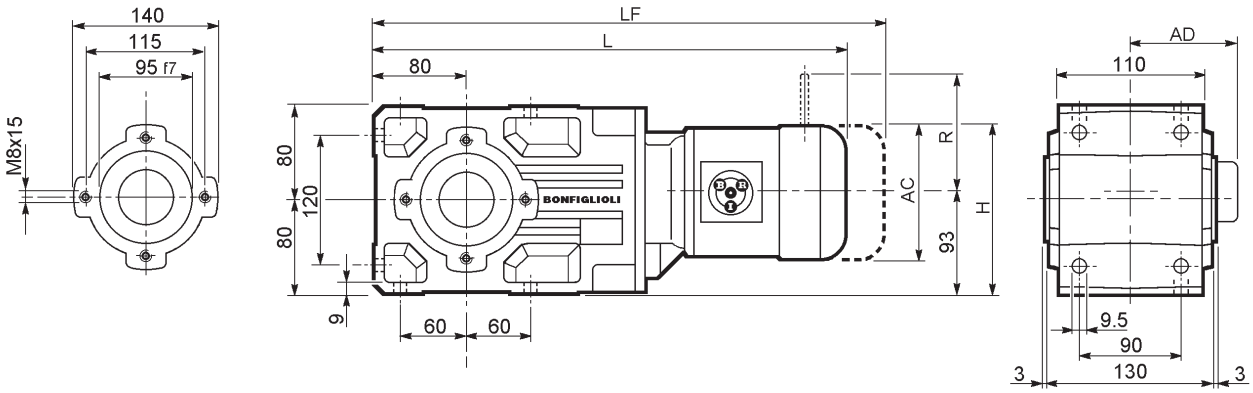

								M...FD M...FA		M...FD		M...FA	
			AC	H	L	AD	Kg	LF	Kg	R	AD	R	AD
A 20 2	**S05**	**M05**	121	143.5	432	95	16	498	18	96	122	116	95
A 20 2	**S1**	**M1**	138	152	461	108	18	522	21	103	135	124	108
A 20 2	**S2**	**ME2S**	156	161	490	119	22	—	—	—	—	—	—
A 20 2	**S2**	**MX2S**	156	161	434	119	27.1	—	—	—	—	—	—
A 20 2	**S3**	**ME3S**	195	180.5	533	142	28.5	—	—	—	—	—	—
A 20 2	**S3**	**MX3S**	195	180.5	565	142	31.5	—	—	—	—	—	—
A 20 2	**S3**	**ME3L**	195	180.5	565	142	34	—	—	—	—	—	—
A 20 2	**S3**	**MX3L**	195	180.5	609	142	40	—	—	—	—	—	—
A 20 3	**S05**	**M05**	121	143.5	457.5	95	16	553.5	18	96	122	116	95
A 20 3	**S1**	**M1**	138	152	486.5	108	19	577.5	21	103	135	124	108
A 20 3	**S2**	**ME2S**	156	161	545.5	119	23	—	—	—	—	—	—
A 20 3	**S2**	**MX2S**	156	161	589.5	119	28.1	—	—	—	—	—	—
A 20 3	**S3**	**ME3S**	195	180.5	588.5	142	29.5	—	—	—	—	—	—
A 20 3	**S3**	**MX3S**	195	180.5	620.5	142	32.5	—	—	—	—	—	—
A 20 3	**S3**	**ME3L**	195	180.5	620.5	142	35	—	—	—	—	—	—
A 20 3	**S3**	**MX3L**	195	180.5	664.5	142	41	—	—	—	—	—	—

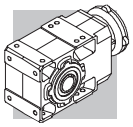

A 20...P(IEC)

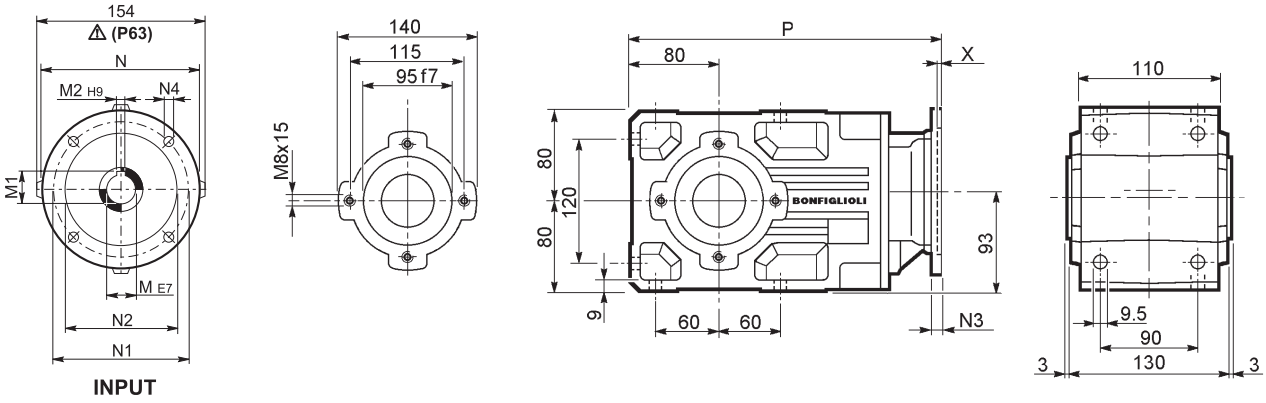

		M	M1	M2	N	N1	N2	N3	N4	X	P	Kg
A 20 2	**P63**	11	12.8	4	140	115	95	—	M8x19	4	306	12
A 20 2	**P71**	14	16.3	5	160	130	110	—	M8x16	4.5	306	12
A 20 2	**P80**	19	21.8	6	200	165	130	—	M10x14.5	4	325.5	13
A 20 2	**P90**	24	27.3	8	200	165	130	—	M10x14.5	4	325.5	13
A 20 2	**P100**	28	31.3	8	250	215	180	—	M12x16	4.5	335.5	17
A 20 2	**P112**	28	31.3	8	250	215	180	—	M12x16	4.5	335.5	17
A 20 3	**P63**	11	12.8	4	140	115	95	—	M8x19	4	361.5	13
A 20 3	**P71**	14	16.3	5	160	130	110	—	M8x16	4.5	361.5	13
A 20 3	**P80**	19	21.8	6	200	165	130	—	M10x14.5	4	381	14
A 20 3	**P90**	24	27.3	8	200	165	130	—	M10x14.5	4	381	14
A 20 3	**P100**	28	31.3	8	250	215	180	—	M12x16	4.5	391	18
A 20 3	**P112**	28	31.3	8	250	215	180	—	M12x16	4.5	391	18

A 20...HS

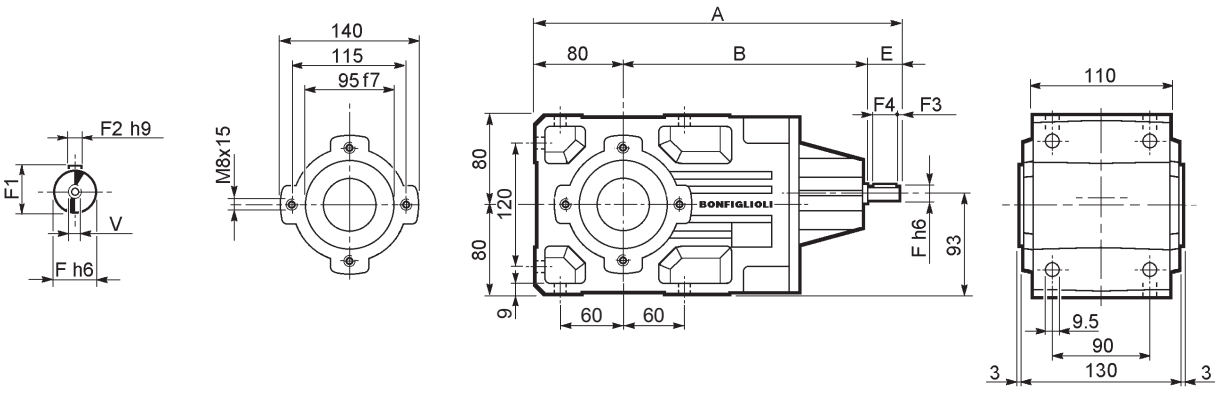

		A	B	E	F	F1	F2	F3	F4	V	Kg
A 20 2	**HS**	356	236	40	19	21.5	6	2.5	35	M6x16	11.9
A 20 3		368.5	248.5	40	16	18	5	2.5	35	M6x16	12.2

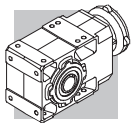

A 20...SK / SC

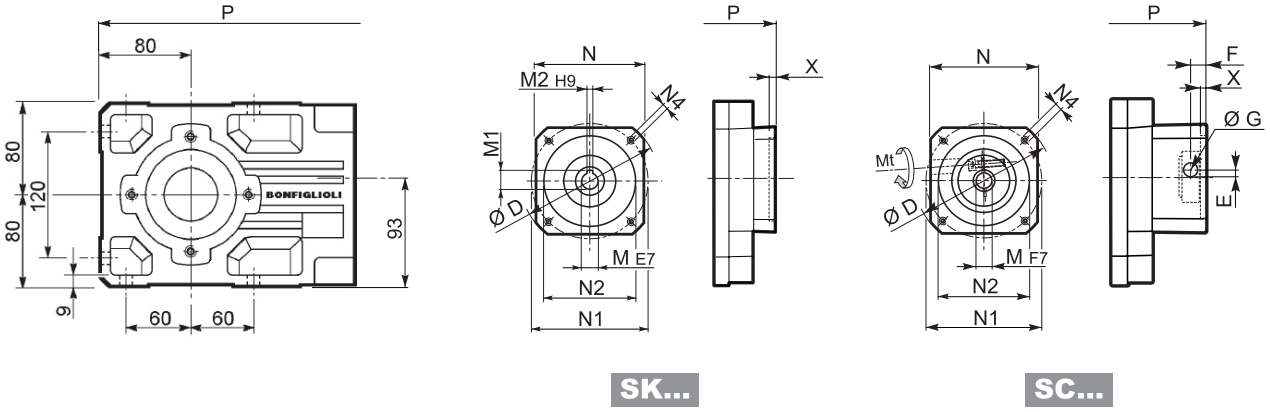

SK...

SC...

		D	M	M1	M2	N	N1	N2	N4	X	P 2x	P 3x	Kg
A 20 2/3	**SK60A**	102	11	12.8	4	82	75	60	M5x10	3.5	277.5	333	11/12
A 20 2/3	**SK60B**	102	14	16.3	5	82	75	60	M5x10	4	284.5	340	12/13
A 20 2/3	**SK80A**	115	14	16.3	5	90	100	80	M6x12	4	284.5	340	12/13
A 20 2/3	**SK80C**	120	19	21.8	6	96	100	80	M6x12	4	325.5	381	13/14
A 20 2/3	**SK95A**	130	14	16.3	5	102	115	95	M8x12	4	325.5	381	13/14
A 20 2/3	**SK95B**	130	19	21.8	6	102	115	95	M8x12	4	325.5	381	13/14
A 20 2/3	**SK95C**	130	24	27.3	8	102	115	95	M8x12	4	325.5	381	13/14
A 20 2/3	**SK110A**	150	19	21.8	6	120	130	110	M8x12	5	325.5	381	13/14
A 20 2/3	**SK110B**	150	24	27.3	8	120	130	110	M8x12	5	325.5	381	13/14

		Mt [Nm]	D	E	F	G	M	N	N1	N2	N4	X	P 2x	P 3x	Kg
A 20 2/3	**SC60A**	M6 15	102	7	12.5	12.5	11	82	75	60	M5x10	4	304.5	360	12/13
A 20 2/3	**SC60B**	M6 15	102	7	12.5	12.5	14	82	75	60	M5x10	4	304.5	360	13/14
A 20 2/3	**SC80A**	M6 15	115	6	12.5	12.5	14	90	100	80	M6x12	4	304.5	360	13/14
A 20 2/3	**SC80C**	M6 15	120	15.5	14.5	17.75	19	96	100	80	M6x12	4	349	404.5	14/15
A 20 2/3	**SC95A**	M6 15	130	16.5	15	17.75	14	102	115	95	M8x16	4	349	404.5	14/15
A 20 2/3	**SC95B**	M6 15	130	16.5	15	17.75	19	102	115	95	M8x16	4	349	404.5	14/15
A 20 2/3	**SC95C**	M6 15	130	16.5	15	17.75	24	102	115	95	M8x16	4	349	404.5	14/15
A 20 2/3	**SC110A**	M6 15	150	16.5	16	17.75	19	120	130	110	M8x16	5	349	404.5	15/16
A 20 2/3	**SC110B**	M6 15	150	16.5	16	17.75	24	120	130	110	M8x16	5	349	404.5	15/16

A 20...F...

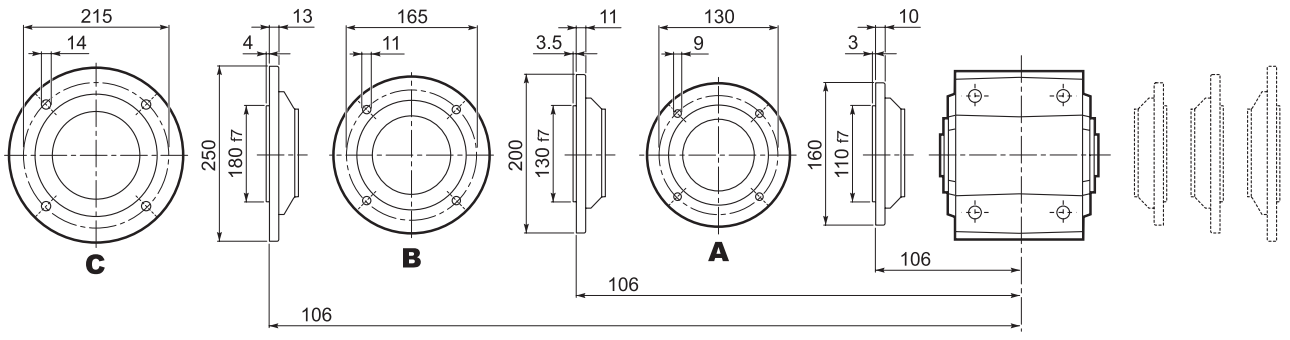

Bonfiglioli Riduttori

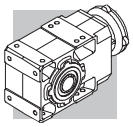

A 20

A 20...UR

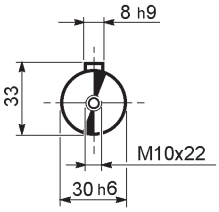

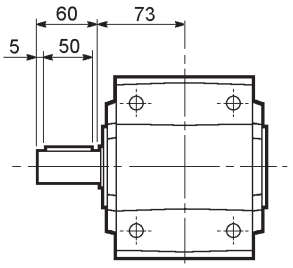

A 20...UD

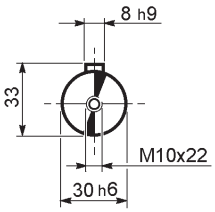

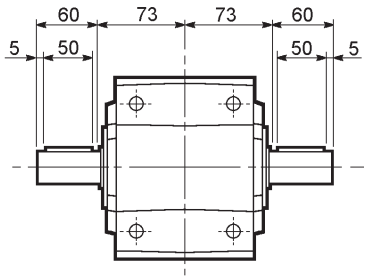

A 20...UH

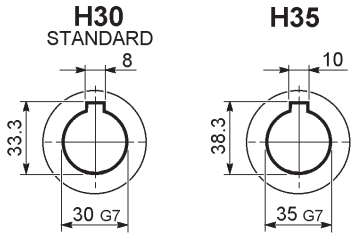

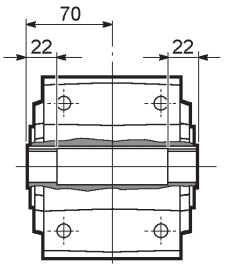

A 20...US

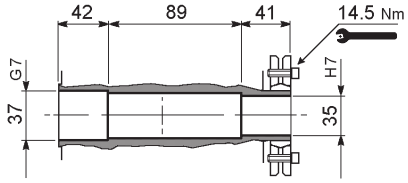

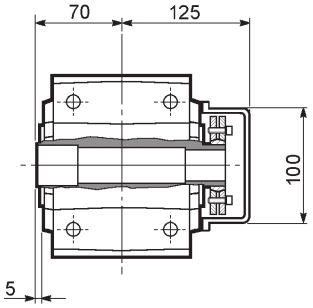

A 20...QF

	Ø
QF25	25
QF30	30

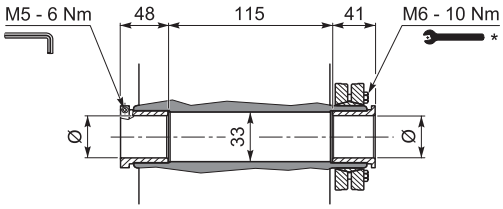

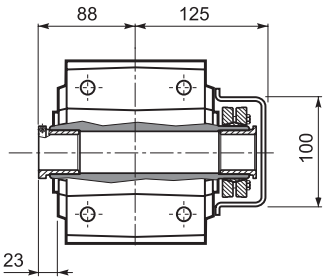

A 20...UV

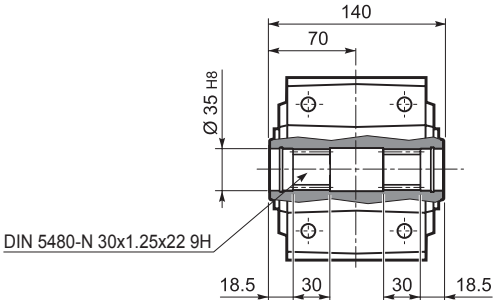

详细安装指南见随机文件

A 30...M/ME/MX

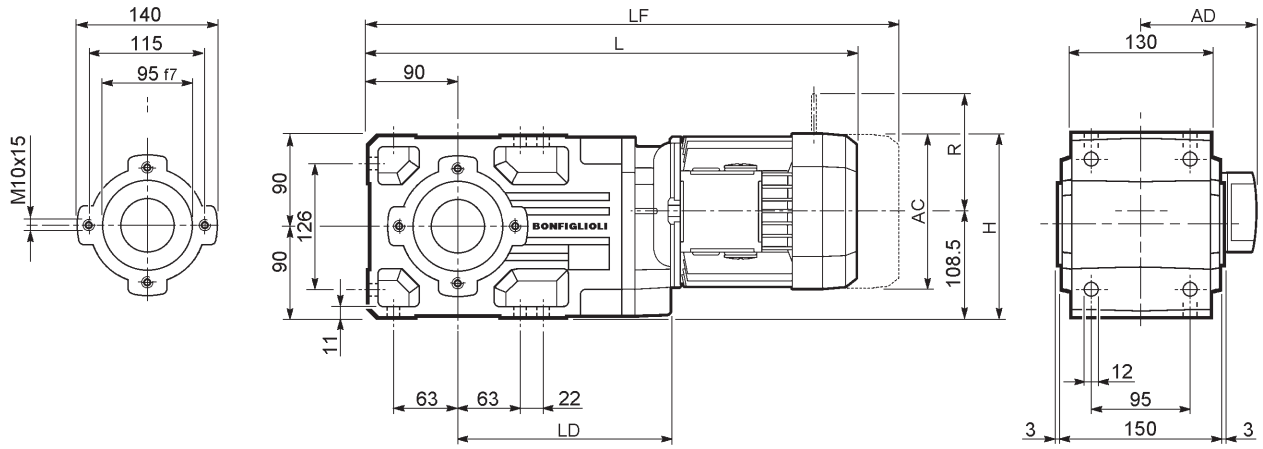

									M...FD M...FA		M...FD		M...FA	
			AC	H	L	LD	AD	Kg	LF	Kg	R	AD	R	AD
A 30 2	**S1**	**M1**	138	177.5	488	201	108	22	549	24	103	135	124	108
A 30 2	**S2**	**ME2S**	156	186.5	517	213	119	25	—	—	—	—	—	—
A 30 2	**S2**	**MX2S**	156	186.5	561	213	119	30.1	—	—	—	—	—	—
A 30 2	**S3**	**ME3S**	195	206	560	223	142	31.5	—	—	—	—	—	—
A 30 2	**S3**	**MX3S**	195	206	592	223	142	34.5	—	—	—	—	—	—
A 30 2	**S3**	**ME3L**	195	206	592	223	142	38	—	—	—	—	—	—
A 30 2	**S3**	**MX3L**	195	206	636	223	142	44	—	—	—	—	—	—
A 30 3	**S05**	**M05**	121	169	516.5	—	95	21	582.5	22	96	122	116	95
A 30 3	**S1**	**M1**	138	177.5	545.5	—	108	23	606.5	26	103	135	124	108
A 30 3	**S2**	**ME2S**	156	186.5	574.5	—	119	25	—	—	—	—	—	—
A 30 3	**S2**	**MX2S**	156	186.5	618.5	—	119	30.1	—	—	—	—	—	—
A 30 3	**S3**	**ME3S**	195	206	617.5	—	142	31.5	—	—	—	—	—	—
A 30 3	**S3**	**MX3S**	195	206	649.5	—	142	34.5	—	—	—	—	—	—
A 30 3	**S3**	**ME3L**	195	206	649.5	—	142	38	—	—	—	—	—	—
A 30 3	**S3**	**MX3L**	195	206	693.5	—	142	44	—	—	—	—	—	—

A 30...P(IEC)

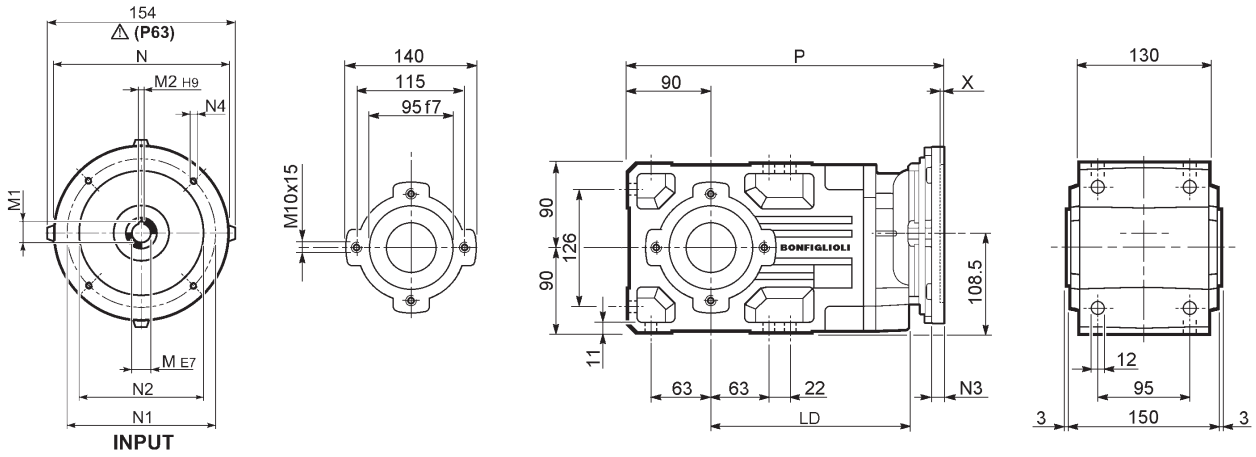

		LD	M	M1	M2	N	N1	N2	N3	N4	X	P	Kg
A 30 2	**P63**	213	11	12.8	4	140	115	95	—	M8x19	4	333	16
A 30 2	**P71**	213	14	16.3	5	160	130	110	—	M8x16	4.5	333	16
A 30 2	**P80**	223	19	21.8	6	200	165	130	—	M10x14.5	4	352.5	17
A 30 2	**P90**	223	24	27.3	8	200	165	130	—	M10x14.5	4	352.5	17
A 30 2	**P100**	223	28	31.3	8	250	215	180	—	M12x16	4.5	362.5	20
A 30 2	**P112**	223	28	31.3	8	250	215	180	—	M12x16	4.5	362.5	20
A 30 3	**P63**	—	11	12.8	4	140	115	95	—	M8x19	4	390.5	17
A 30 3	**P71**	—	14	16.3	5	160	130	110	—	M8x16	4.5	390.5	17
A 30 3	**P80**	—	19	21.8	6	200	165	130	—	M10x14.5	4	410	18
A 30 3	**P90**	—	24	27.3	8	200	165	130	—	M10x14.5	4	410	18
A 30 3	**P100**	—	28	31.3	8	250	215	180	—	M12x16	4.5	420	22
A 30 3	**P112**	—	28	31.3	8	250	215	180	—	M12x16	4.5	420	22

A 30...HS

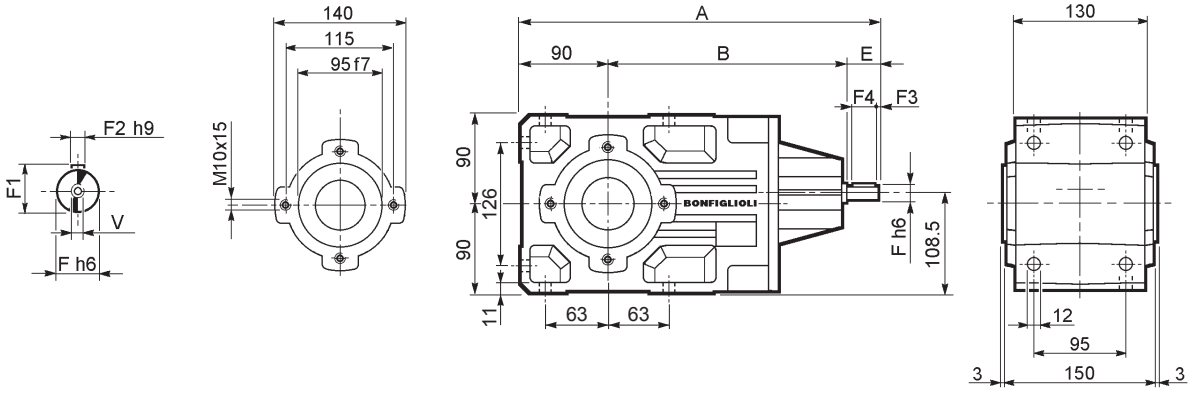

		A	B	E	F	F1	F2	F3	F4	V	Kg
A 30 2	**HS**	383	253	40	19	21.5	6	2.5	35	M6x16	16.7
A 30 3		397.5	267.5	40	16	18	5	2.5	35	M6x16	16.5

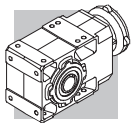

A 30...SK / SC

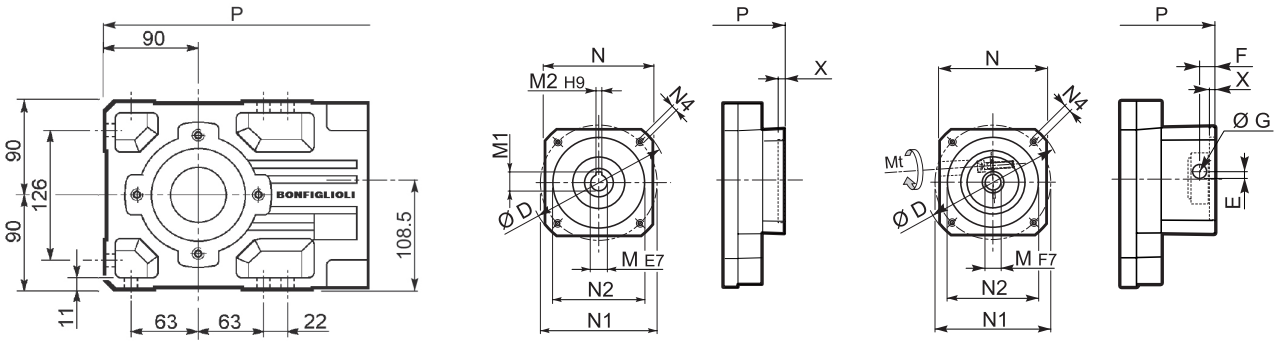

SK...

SC...

		D	M	M1	M2	N	N1	N2	N4	X	P 2x	P 3x	Kg
A 30 2/3	**SK60A**	102	11	12.8	4	82	75	60	M5x10	3.5	304.5	362	15/16
A 30 2/3	**SK60B**	102	14	16.3	5	82	75	60	M5x10	4	311.5	369	16/17
A 30 2/3	**SK80A**	115	14	16.3	5	90	100	80	M6x12	4	311.5	369	16/17
A 30 2/3	**SK80C**	120	19	21.8	6	96	100	80	M6x12	4	352.5	410	17/18
A 30 2/3	**SK95A**	130	14	16.3	5	102	115	95	M8x12	4	352.5	410	17/18
A 30 2/3	**SK95B**	130	19	21.8	6	102	115	95	M8x12	4	352.5	410	17/18
A 30 2/3	**SK95C**	130	24	27.3	8	102	115	95	M8x12	4	352.5	410	17/18
A 30 2/3	**SK110A**	150	19	21.8	6	120	130	110	M8x12	5	352.5	410	17/18
A 30 2/3	**SK110B**	150	24	27.3	8	120	130	110	M8x12	5	352.5	410	17/18
A 30 2	**SK130A**	188	24	27.3	8	142	165	130	M10x20	5	352.5	—	18

		Mt [Nm]	D	E	F	G	M	N	N1	N2	N4	X	P 2x	P 3x	Kg
A 30 2/3	**SC60A**	M6 15	102	7	12.5	12.5	11	82	75	60	M5x10	4	331.5	389	16/17
A 30 2/3	**SC60B**	M6 15	102	7	12.5	12.5	14	82	75	60	M5x10	4	331.5	389	17/18
A 30 2/3	**SC80A**	M6 15	115	6	12.5	12.5	14	90	100	80	M6x12	4	331.5	389	17/18
A 30 2/3	**SC80C**	M6 15	120	15.5	14.5	17.75	19	96	100	80	M6x12	4	376	433.5	18/19
A 30 2/3	**SC95A**	M6 15	130	16.5	15	17.75	14	102	115	95	M8x16	4	376	433.5	18/19
A 30 2/3	**SC95B**	M6 15	130	16.5	15	17.75	19	102	115	95	M8x16	4	376	433.5	18/19
A 30 2/3	**SC95C**	M6 15	130	16.5	15	17.75	24	102	115	95	M8x16	4	376	433.5	18/19
A 30 2/3	**SC 110A**	M6 15	150	16.5	16	17.75	19	120	130	110	M8x16	5	376	433.5	19/20
A 30 2/3	**SC 110B**	M6 15	150	16.5	16	17.75	24	120	130	110	M8x16	5	376	433.5	19/20
A 30 2	**SC 130A**	M6 15	188	19	16	17.75	24	142	165	130	M10x20	5	376	—	20

A 30...F...

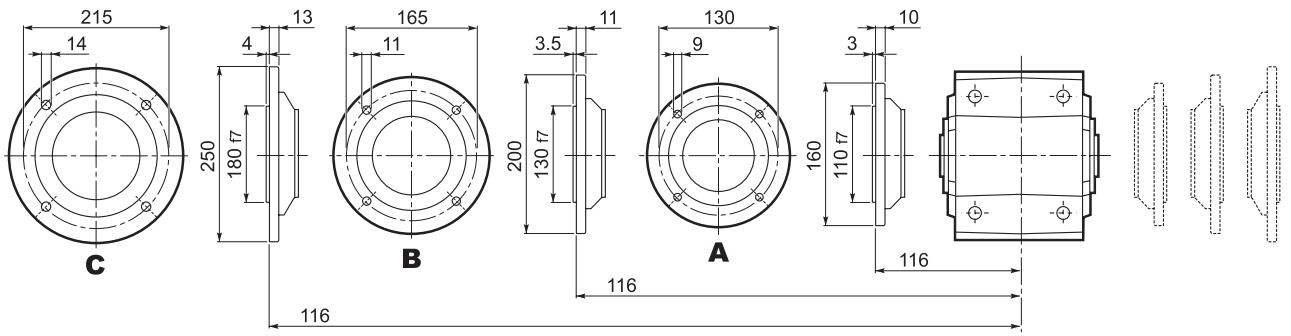

Bonfiglioli Riduttori

A 30

A 30...UR

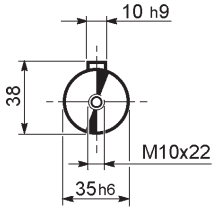

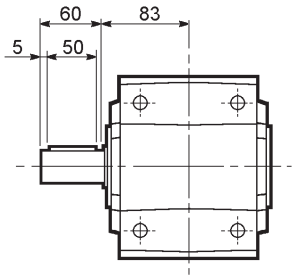

A 30...UD

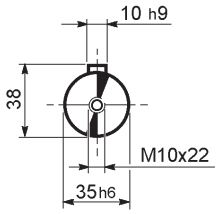

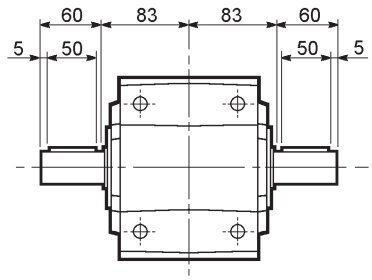

A 30...UH

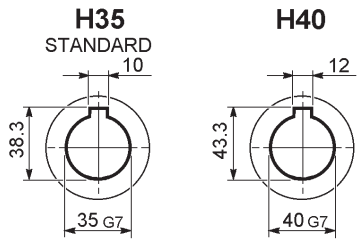

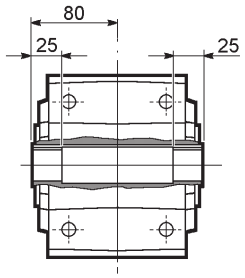

A 30...US

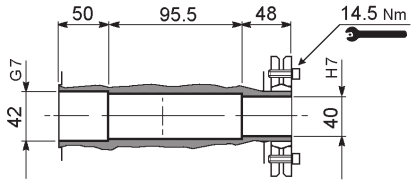

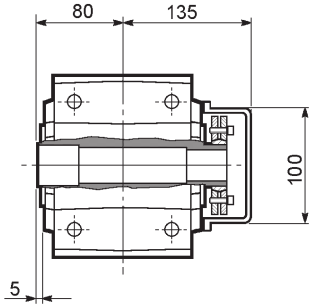

A 30...QF

	Ø
QF35	35
QF40	40

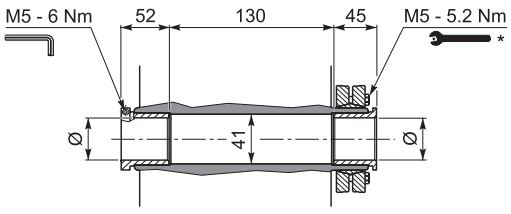

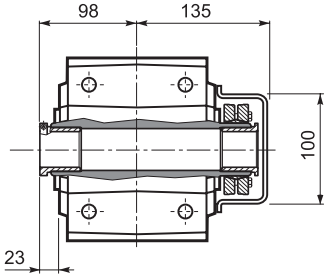

A 30...UV

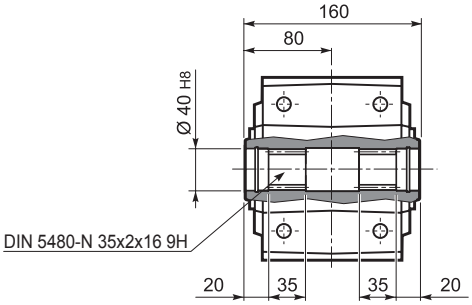

详细安装指南见随机文件

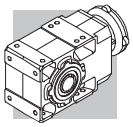

A 35...M/ME/MX

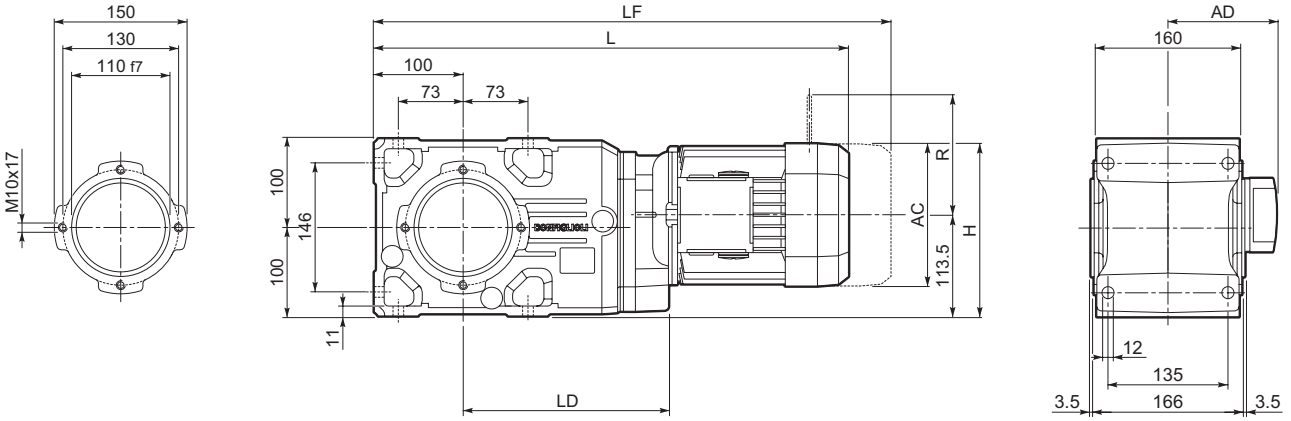

										M...FD M...FA		M...FD		M...FA	
				AC	H	L	LD	AD	Kg	LF	Kg	R	AD	R	AD
A 35 2	**S1**	**M1**		138	182.5	514.5	217.5	108	34	575.5	36	103	135	124	108
A 35 2	**S2**	**ME2S**		156	191.5	543.5	229.5	119	37	—	—	—	—	—	—
A 35 2	**S2**	**MX2S**		156	191.5	587.5	229.5	119	37	—	—	—	—	—	—
A 35 2	**S3**	**ME3S**		195	211	586.5	239.5	142	43.5	—	—	—	—	—	—
A 35 2	**S3**	**MX3S**		195	211	618.5	239.5	142	43.5	—	—	—	—	—	—
A 35 2	**S3**	**ME3L**		195	211	618.5	239.5	142	50	—	—	—	—	—	—
A 35 2	**S3**	**MX3L**		195	211	652.5	239.5	142	50	—	—	—	—	—	—
A 35 2	**S4**	**ME4**	**MX4**	258	242.5	726.5	—	193	89	—	—	—	—	—	—
A 35 2	**S4**	**ME4LB**	**MX4LA**	258	242.5	761.5	—	193	97	—	—	—	—	—	—
A 35 3	**S05**	**M05S**		121	174	543	—	95	33	609	34	96	122	116	95
A 35 3	**S1**	**M1**		138	182.5	572	—	108	35	633	38	103	135	124	108
A 35 3	**S2**	**ME2S**		156	191.5	601	—	119	37	—	—	—	—	—	—
A 35 3	**S2**	**MX2S**		156	191.5	645	—	119	37	—	—	—	—	—	—
A 35 3	**S3**	**ME3S**		195	211	644	—	142	43.5	—	—	—	—	—	—
A 35 3	**S3**	**MX3S**		195	211	676	—	142	43.5	—	—	—	—	—	—
A 35 3	**S3**	**ME3L**		195	211	676	—	142	50	—	—	—	—	—	—
A 35 3	**S3**	**MX3L**		195	211	720	—	142	50	—	—	—	—	—	—

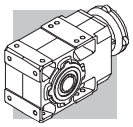

A 35...P(IEC)

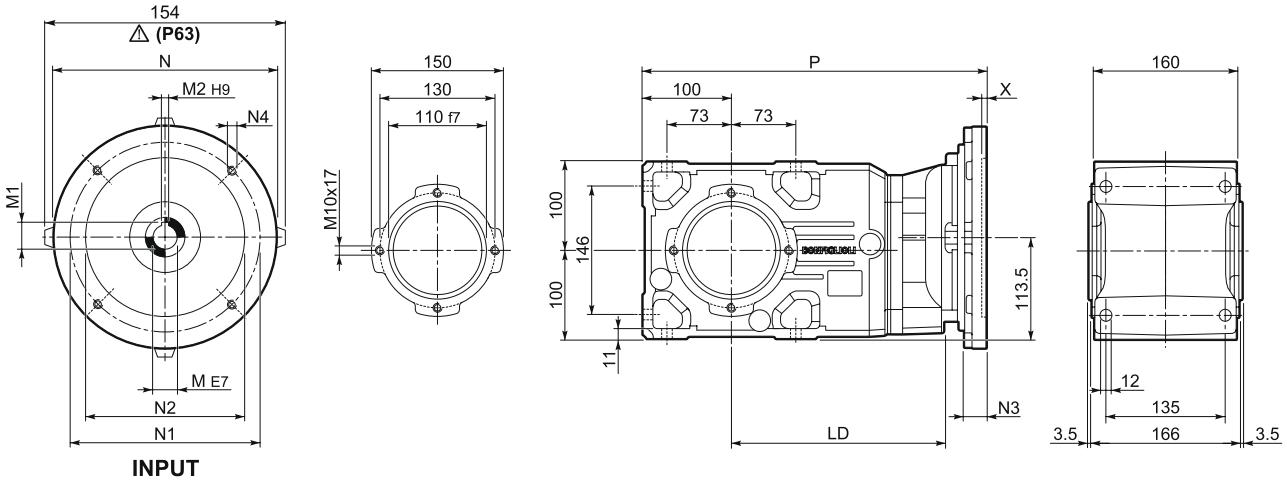

		LD	M	M1	M2	N	N1	N2	N3	N4	X	P	Kg
A 35 2	**P63**	229.5	11	12.8	4	140	115	95	—	M8x19	4	359.5	28
A 35 2	**P71**	229.5	14	16.3	5	160	130	110	—	M8x16	4.5	359.5	28
A 35 2	**P80**	239.5	19	21.8	6	200	165	130	—	M10x14.5	4	379	29
A 35 2	**P90**	239.5	24	27.3	8	200	165	130	—	M10x14.5	4	379	29
A 35 2	**P100**	239.5	28	31.3	8	250	215	180	—	M12x16	4.5	389	32
A 35 2	**P112**	239.5	28	31.3	8	250	215	180	—	M12x16	4.5	389	32
A 35 2	**P132**	—	38	41.3	10	300	265	230	16	14	5	425.5	40
A 35 3	**P63**	—	11	12.8	4	140	115	95	—	M8x19	4	417	29
A 35 3	**P71**	—	14	16.3	5	160	130	110	—	M8x16	4.5	417	29
A 35 3	**P80**	—	19	21.8	6	200	165	130	—	M10x14.5	4	436.5	30
A 35 3	**P90**	—	24	27.3	8	200	165	130	—	M10x14.5	4	436.5	30
A 35 3	**P100**	—	28	31.3	8	250	215	180	—	M12x16	4.5	446.5	34
A 35 3	**P112**	—	28	31.3	8	250	215	180	—	M12x16	4.5	446.5	34

A 35...HS

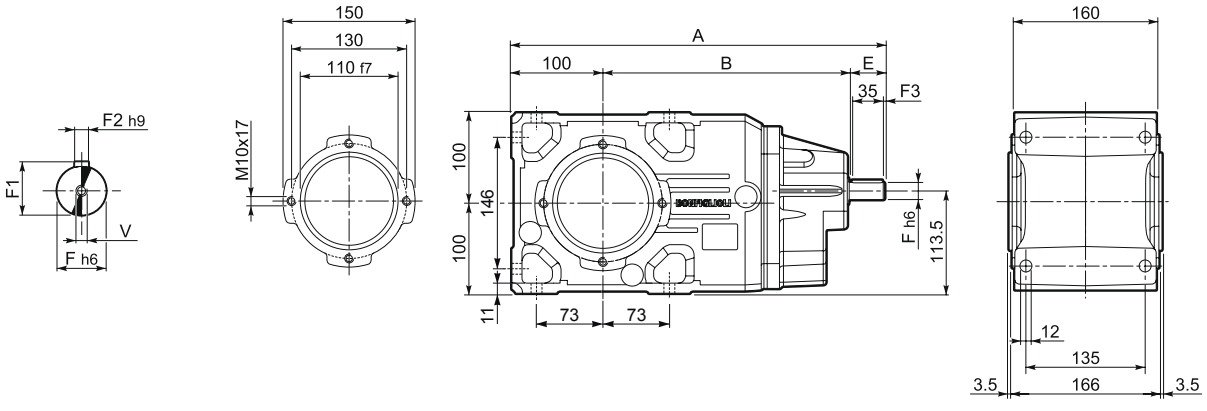

		A	B	E	F	F1	F2	F3	F4	V	Kg
A 35 2	**HS**	409.5	269.5	40	19	21.5	6	2.5	35	M6x16	29
A 35 3		424	284	40	16	18	5	2.5	35	M6x16	29

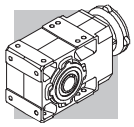

A 35...SK / SC

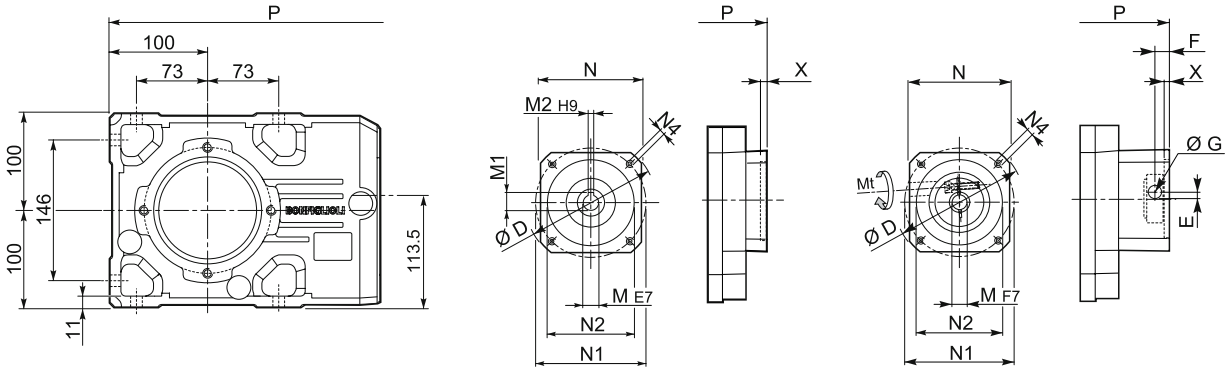

SK... **SC...**

		D	M	M1	M2	N	N1	N2	N4	X	P 2x	P 3x	Kg
A 35 2/3	**SK60A**	102	11	12.8	4	82	75	60	M5x10	3.5	331	388.5	27/28
A 35 2/3	**SK60B**	102	14	16.3	5	82	75	60	M5x10	4	338	395.5	28/29
A 35 2/3	**SK80A**	115	14	16.3	5	90	100	80	M6x12	4	338	395.5	28/29
A 35 2/3	**SK80C**	120	19	21.8	6	96	100	80	M6x12	4	379	436.5	29/30
A 35 2/3	**SK95A**	130	14	16.3	5	102	115	95	M8x12	4	379	436.5	29/30
A 35 2/3	**SK95B**	130	19	21.8	6	102	115	95	M8x12	4	379	436.5	29/30
A 35 2/3	**SK95C**	130	24	27.3	8	102	115	95	M8x12	4	379	436.5	29/30
A 35 2/3	**SK110A**	150	19	21.8	6	120	130	110	M8x12	5	379	436.5	29/30
A 35 2/3	**SK110B**	150	24	27.3	8	120	130	110	M8x12	5	379	436.5	29/30
A 35 2	**SK130A**	188	24	27.3	8	142	165	130	M10x20	5	379	—	30

			Mt [Nm]	D	E	F	G	M	N	N1	N2	N4	X	P 2x	P 3x	Kg
A 35 2/3	**SC60A**	M6	15	102	7	12.5	12.5	11	82	75	60	M5x10	4	358	415.5	28/29
A 35 2/3	**SC60B**	M6	15	102	7	12.5	12.5	14	82	75	60	M5x10	4	358	415.5	29/30
A 35 2/3	**SC80A**	M6	15	115	6	12.5	12.5	14	90	100	80	M6x12	4	358	415.5	29/30
A 35 2/3	**SC80C**	M6	15	120	15.5	14.5	17.75	19	96	100	80	M6x12	4	402.5	460	30/31
A 35 2/3	**SC95A**	M6	15	130	16.5	15	17.75	14	102	115	95	M8x16	4	402.5	460	30/31
A 35 2/3	**SC95B**	M6	15	130	16.5	15	17.75	19	102	115	95	M8x16	4	402.5	460	30/31
A 35 2/3	**SC95C**	M6	15	130	16.5	15	17.75	24	102	115	95	M8x16	4	402.5	460	30/31
A 35 2/3	**SC110A**	M6	15	150	16.5	16	17.75	19	120	130	110	M8x16	5	402.5	460	32/33
A 35 2/3	**SC110B**	M6	15	150	16.5	16	17.75	24	120	130	110	M8x16	5	402.5	460	32/33
A 35 2	**SC130A**	M6	15	188	19	16	17.75	24	142	165	130	M10x20	5	402.5	—	33

A 35...F...

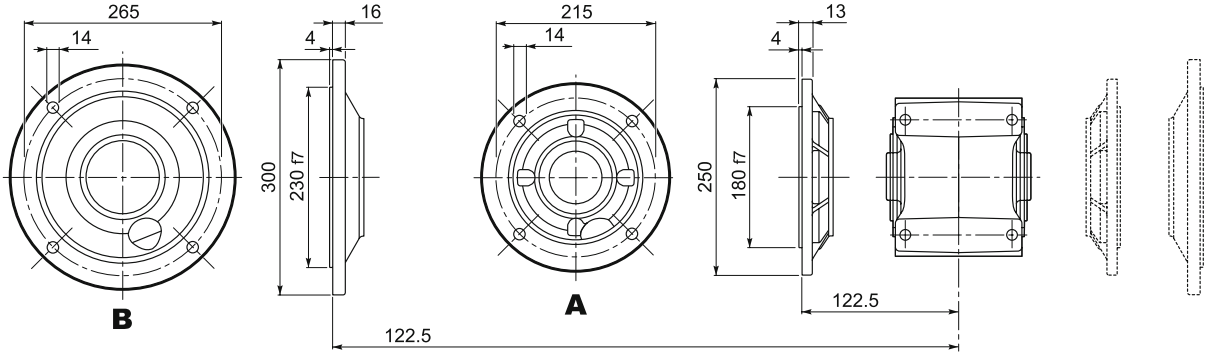

Bonfiglioli Riduttori

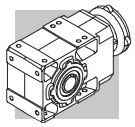

A 35

A 35...UR

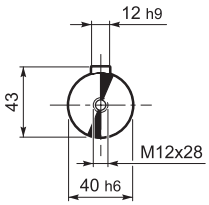

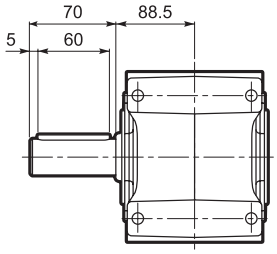

A 35...UD

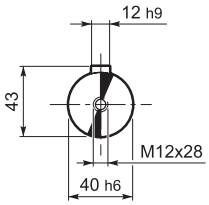

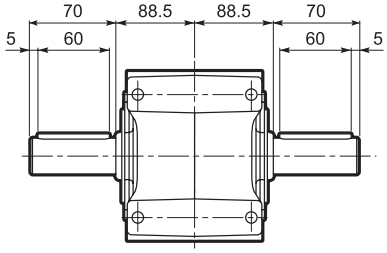

A 35...UH

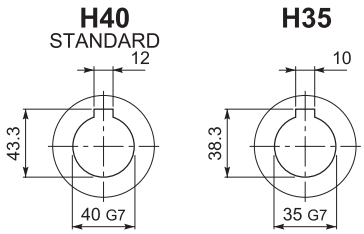

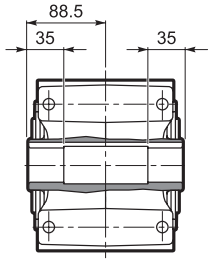

A 35...US

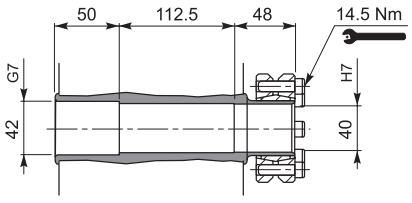

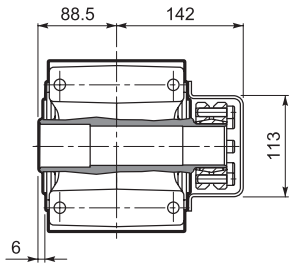

A 35...QF

	Ø
QF35	35
QF40	40

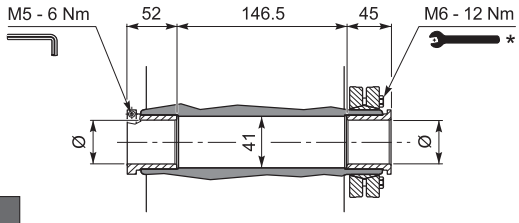

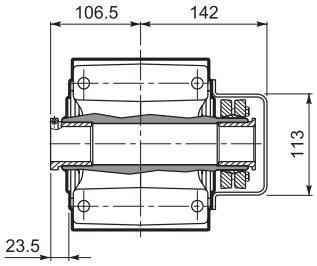



$M_{n2\ max}$ [Nm]	
A 35 QF35	550

A 35...UV

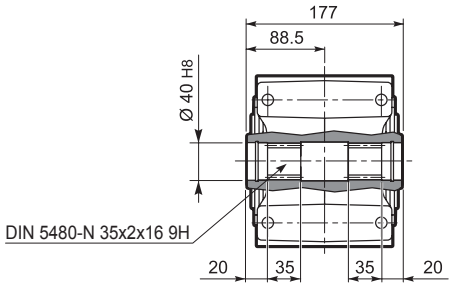

详细安装指南见随机文件

A 41...M/ME/MX

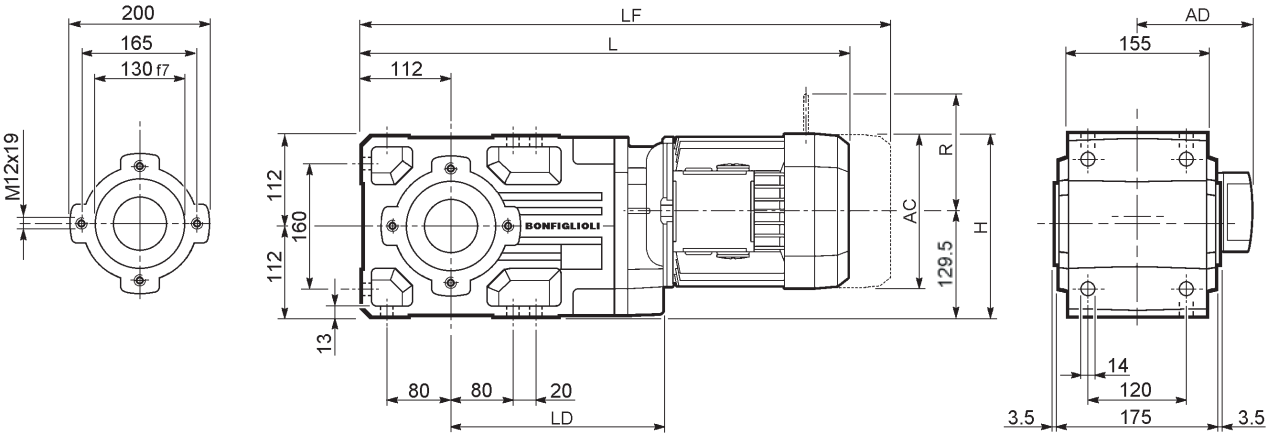

										M...FD M...FA		M...FD		M...FA	
				AC	H	L	LD	AD	Kg	LF	Kg	R	AD	R	AD
A 41 2	**S1**	**M1**		138	198.5	530	216.5	108	41	591	44	103	135	124	108
A 41 2	**S2**	**ME2S**		156	207.5	559	232	119	45	—	—	—	—	—	—
A 41 2	**S2**	**MX2S**		156	207.5	603	232	119	50.1	—	—	—	—	—	—
A 41 2	**S3**	**ME3S**		195	227	602	248	142	51.5	—	—	—	—	—	—
A 41 2	**S3**	**MX3S**		195	227	634	248	142	54.5	—	—	—	—	—	—
A 41 2	**S3**	**ME3L**		195	227	634	248	142	58	—	—	—	—	—	—
A 41 2	**S3**	**MX3L**		195	227	678	248	142	64	—	—	—	—	—	—
A 41 2	**S4**	**ME4**	**MX4**	258	258.5	742	—	193	92	—	—	—	—	—	—
A 41 2	**S4**	**ME4LB**	**MX4LA**	258	258.5	777	—	193	100	—	—	—	—	—	—
A 41 3	**S05**	**M05**		121	245	562.5	—	95	44	628.5	46	96	122	116	95
A 41 3	**S1**	**M1**		138	198.5	591.5	—	108	46	652.5	49	103	135	124	108
A 41 3	**S2**	**ME2S**		156	207.5	620.5	—	119	50	—	—	—	—	—	—
A 41 3	**S2**	**MX2S**		156	207.5	664.5	—	119	55.1	—	—	—	—	—	—
A 41 3	**S3**	**ME3S**		195	227	663.5	—	142	56.5	—	—	—	—	—	—
A 41 3	**S3**	**MX3S**		195	227	695.5	—	142	59.5	—	—	—	—	—	—
A 41 3	**S3**	**ME3L**		195	227	695.5	—	142	61	—	—	—	—	—	—
A 41 3	**S3**	**MX3L**		195	227	739.5	—	142	67	—	—	—	—	—	—

A 41...P(IEC)

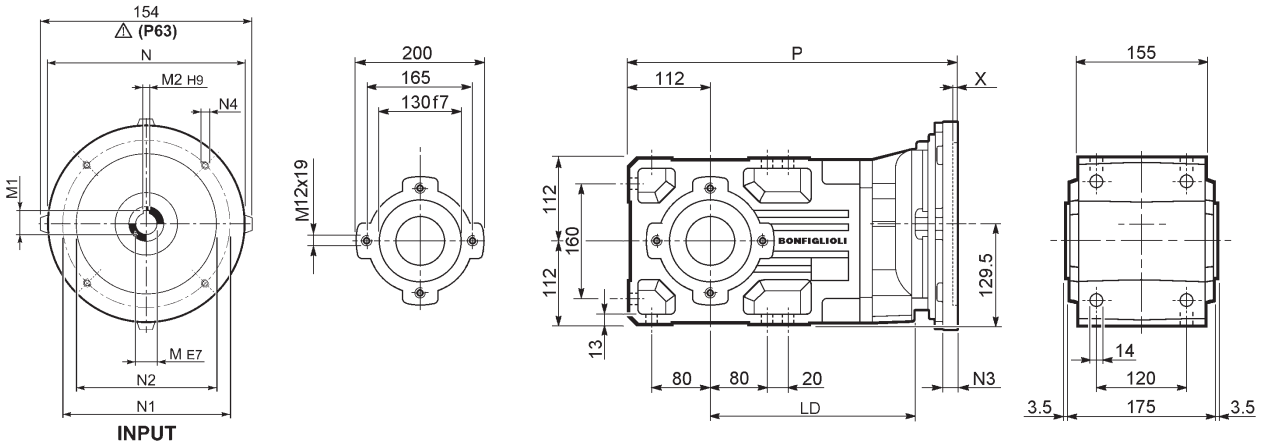

		LD	M	M1	M2	N	N1	N2	N3	N4	X	P	Kg
A 41 2	**P63**	232	11	12.8	4	140	115	95	—	M8x19	4	375	37
A 41 2	**P71**	232	14	16.3	5	160	130	110	—	M8x16	4.5	375	38
A 41 2	**P80**	248	19	21.8	6	200	165	130	—	M10x14.5	4	394.5	39
A 41 2	**P90**	248	24	27.3	8	200	165	130	—	M10x14.5	4	394.5	39
A 41 2	**P100**	—	28	31.3	8	250	215	180	—	M12x16	4.5	404.5	43
A 41 2	**P112**	—	28	31.3	8	250	215	180	—	M12x16	4.5	404.5	43
A 41 2	**P132**	—	38	41.3	10	300	265	230	16	14	5	441	46
A 41 3	**P63**	—	11	12.8	4	140	115	95	—	M8x19	4	436.5	39
A 41 3	**P71**	—	14	16.3	5	160	130	110	—	M8x16	4.5	436.5	39
A 41 3	**P80**	—	19	21.8	6	200	165	130	—	M10x14.5	4	456	40
A 41 3	**P90**	—	24	27.3	8	200	165	130	—	M10x14.5	4	456	40
A 41 3	**P100**	—	28	31.3	8	250	215	180	—	M12x16	4.5	466	44
A 41 3	**P112**	—	28	31.3	8	250	215	180	—	M12x16	4.5	466	44

A 41...HS

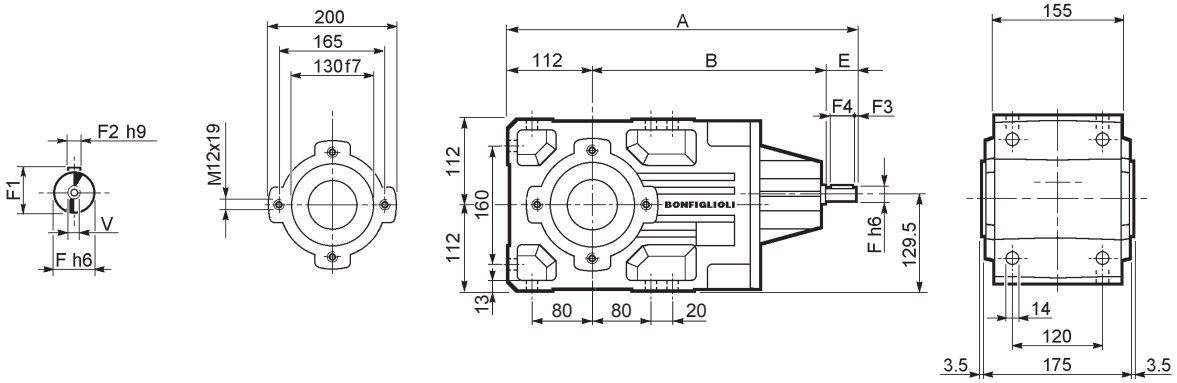

		A	B	E	F	F1	F2	F3	F4	V	Kg
A 41 2	**HS**	464	302.5	50	24	27	8	2.5	45	M8x19	40.7
A 41 3		486.5	334.5	40	19	21.5	6	2.5	35	M6x16	39.5

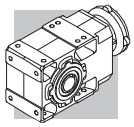

A 41...SK / SC

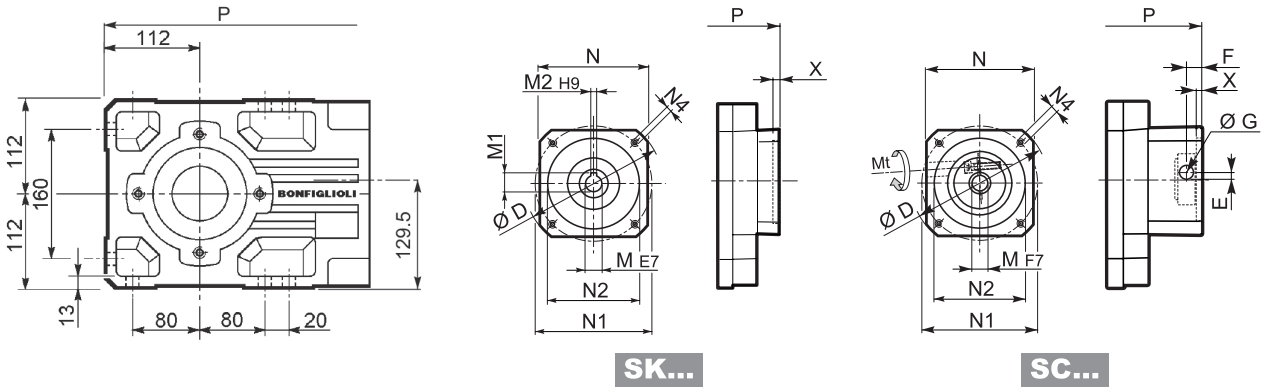

		D	M	M1	M2	N	N1	N2	N4	X	P 2x	P 3x	Kg
A41 3	**SK60A**	102	11	12.8	4	82	75	60	M5x10	3.5	—	408	40
A41 3	**SK60B**	102	14	16.3	5	82	75	60	M5x10	4	—	415	40
A41 3	**SK80A**	115	14	16.3	5	90	100	80	M6x12	4	—	415	40
A41 2	**SK80B**	120	14	16.3	5	96	100	80	M6x12	4	394.5	—	39
A41 2/3	**SK80C**	120	19	21.8	6	96	100	80	M6x12	4	394.5	456	39/40
A41 2/3	**SK95A**	130	14	16.3	5	102	115	95	M8x12	4	394.5	456	39/40
A41 2/3	**SK95B**	130	19	21.8	6	102	115	95	M8x12	4	394.5	456	39/41
A41 2/3	**SK95C**	130	24	27.3	8	102	115	95	M8x12	4	394.5	456	39/44
A41 2/3	**SK110A**	150	19	21.8	6	120	130	110	M8x12	5	394.5	456	39/44
A41 2/3	**SK110B**	150	24	27.3	8	120	130	110	M8x12	5	394.5	456	39/44
A41 2	**SK130A**	188	24	27.3	8	142	165	130	M10x20	5	394.5	—	41
A41 2	**SK130B**	189	32	35.3	10	160	165	130	M10x20	5	441	—	43
A41 2	**SK180A**	240	32	35.3	10	192	215	180	M12x19	5	441	—	43
A41 2	**SK180B**	240	38	41.3	10	192	215	180	M12x19	5	441	—	43

		Mt [Nm]		D	E	F	G	M	N	N1	N2	N4	X	P 2x	P 3x	Kg
A41 3	**SC60A**	M6	15	102	7	12.5	12.5	11	82	75	60	M5x10	4	—	435	41
A41 3	**SC60B**	M6	15	102	7	12.5	12.5	14	82	75	60	M5x10	4	—	435	41
A41 3	**SC80A**	M6	15	115	6	12.5	12.5	14	90	100	80	M6x12	4	—	435	41
A41 2	**SC80B**	M6	15	120	15.5	14.5	17.75	14	96	100	80	M6x12	4	418	—	40
A41 2/3	**SC80C**	M6	15	120	15.5	14.5	17.75	19	96	100	80	M6x12	4	418	479.5	40/41
A41 2/3	**SC95A**	M6	15	130	16.5	15	17.75	14	102	115	95	M8x16	4	418	479.5	40/42
A41 2/3	**SC95B**	M6	15	130	16.5	15	17.75	19	102	115	95	M8x16	4	418	479.5	40/42
A41 2/3	**SC95C**	M6	15	130	16.5	15	17.75	24	102	115	95	M8x16	4	418	479.5	40/43
A41 2/3	**SC110A**	M6	15	150	16.5	16	17.75	19	120	130	110	M8x16	5	418	479.5	41/47
A41 2/3	**SC110B**	M6	15	150	16.5	16	17.75	24	120	130	110	M8x16	5	418	479.5	41/47
A41 2	**SC130A**	M6	15	188	19	16	17.75	24	142	165	130	M10x20	5	418	—	42
A41 2	**SC130B**	M8	36	189	20	17	17.75	32	160	165	130	M10x20	5	464	—	46
A41 2	**SC180A**	M8	36	240	20	17.5	17.75	32	192	215	180	M12x24	5	468	—	46
A41 2	**SC180B**	M8	36	240	20	17.5	17.75	38	192	215	180	M12x24	5	468	—	46

A 41...F...

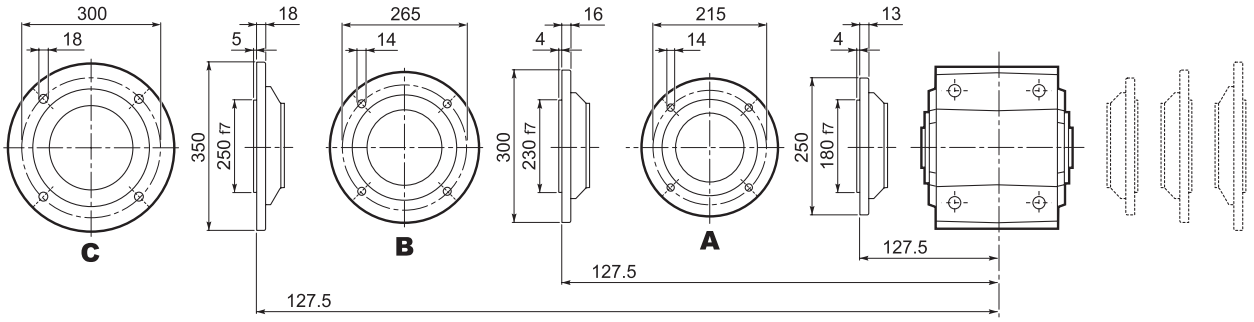

Bonfiglioli Riduttori

A 41

A 41...UR

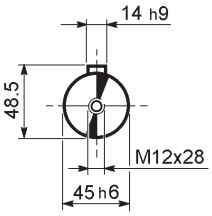

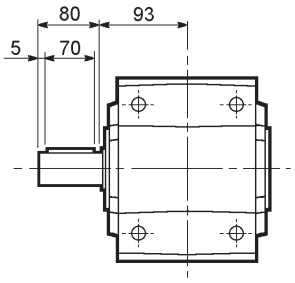

A 41...UD

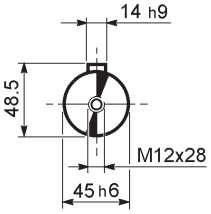

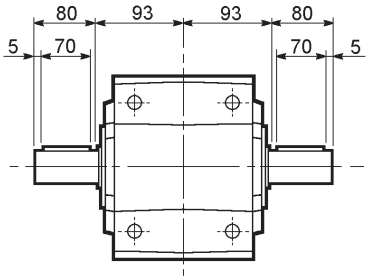

A 41...UH

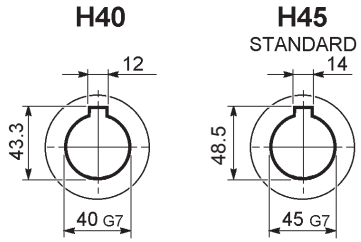

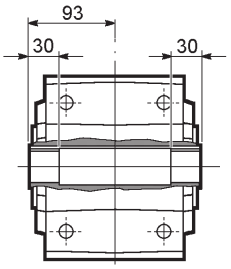

A 41...US

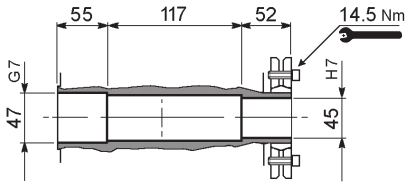

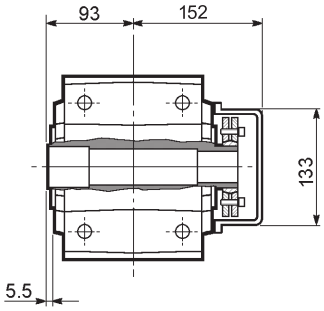

A 41...QF

	Ø
QF40	40
QF45	45

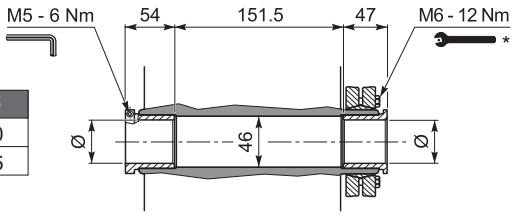

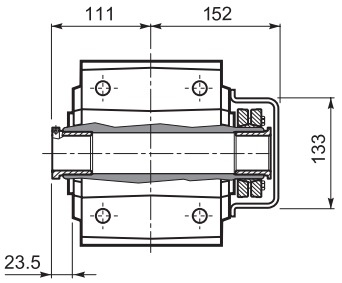

A 41...UV

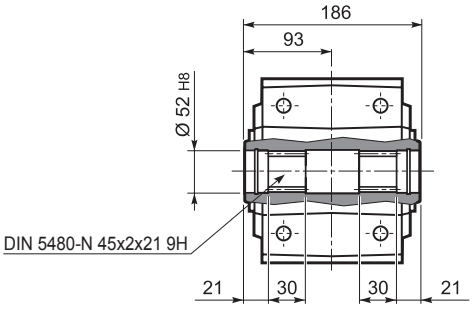

详细安装指南见随机文件

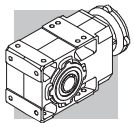

A 50...M/ME/MX

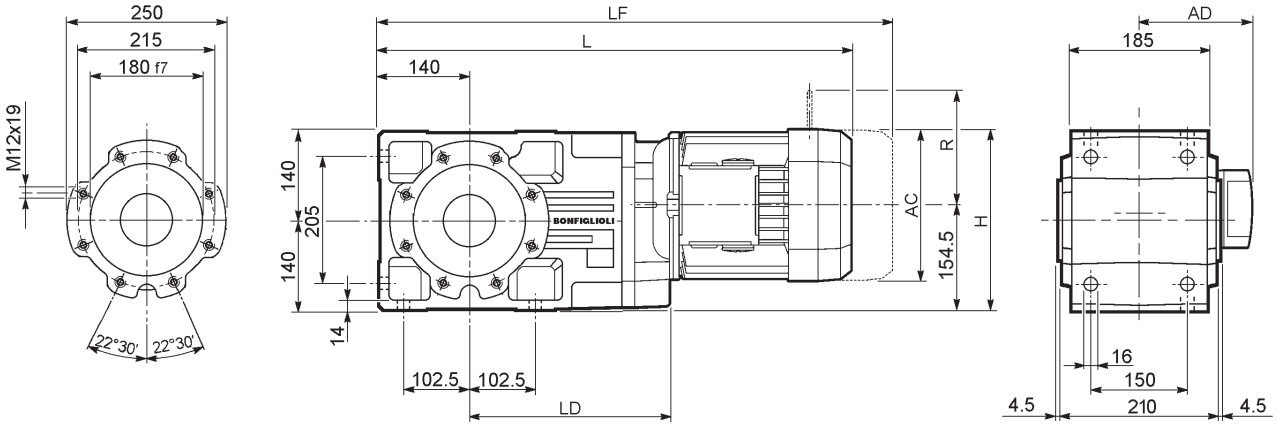

										M...FD M...FA		M...FD		M...FA	
				AC	H	L	LD	AD	Kg	LF	Kg	R	AD	R	AD
A 50 2/3	**S1**	**M1**		138	223	609.5	—	108	66	670.5	69	103	135	124	108
A 50 2/3	**S2**	**ME2S**		156	232	638.5	284.5	119	68	—	—	—	—	—	—
A 50 2/3	**S2**	**MX2S**		156	232	682.5	284.5	119	73.1	—	—	—	—	—	—
A 50 2/3	**S3**	**ME3S**		195	251.5	681.5	299.5	142	74.5	—	—	—	—	—	—
A 50 2/3	**S3**	**MX3S**		195	251.5	713.5	299.5	142	77.5	—	—	—	—	—	—
A 50 2/3	**S3**	**ME3L**		195	251.5	713.5	299.5	142	81	—	—	—	—	—	—
A 50 2/3	**S3**	**MX3L**		195	251.5	757.5	299.5	142	87	—	—	—	—	—	—
A 50 2/3	**S4**	**ME4**	**MX4**	258	283	821.5	284.5	193	115	—	—	—	—	—	—
A 50 2/3	**S4**	**ME4LB**	**MX4LA**	258	283	856.5	284.5	193	123	—	—	—	—	—	—
A 50 2/3	**S5**	**ME5S**	**MX5S**	310	309	908	—	245	143	—	—	—	—	—	—
A 50 2/3	**S5**	**ME5L**	**MX5L**	310	309	952	—	245	159	—	—	—	—	—	—
A 50 4	**S1**	**M1**		138	223	681	—	108	67	742	70	103	135	124	108
A 50 4	**S2**	**ME2S**		156	232	710	—	119	71	—	—	—	—	—	—
A 50 4	**S2**	**MX2S**		156	232	754	—	119	76.1	—	—	—	—	—	—
A 50 4	**S3**	**ME3S**		195	251.5	753	—	142	77.5	—	—	—	—	—	—
A 50 4	**S3**	**MX3S**		195	251.5	785	—	142	80.5	—	—	—	—	—	—
A 50 4	**S3**	**ME3L**		195	251.5	785	—	142	83	—	—	—	—	—	—
A 50 4	**S3**	**MX3L**		195	251.5	829	—	142	89	—	—	—	—	—	—

A 50...P(IEC)

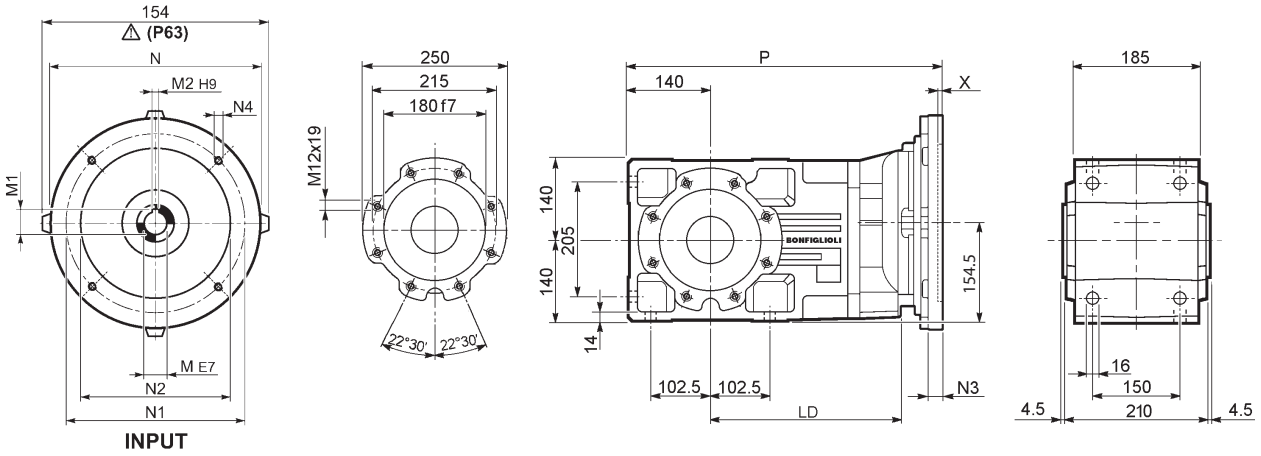

		LD	M	M1	M2	N	N1	N2	N3	N4	X	P	Kg
A 50 2/3	**P63**	284.5	11	12.8	4	140	115	95	—	M8x19	4	454.5	60
A 50 2/3	**P71**	284.5	14	16.3	5	160	130	110	—	M8x16	4.5	454.5	60
A 50 2/3	**P80**	299.5	19	21.8	6	200	165	130	—	M10x14.5	4	474	61
A 50 2/3	**P90**	299.5	24	27.3	8	200	165	130	—	M10x14.5	4	474	61
A 50 2/3	**P100**	284.5	28	31.3	8	250	215	180	—	M12x16	4.5	484	65
A 50 2/3	**P112**	284.5	28	31.3	8	250	215	180	—	M12x16	4.5	484	65
A 50 2/3	**P132**	284.5	38	41.3	10	300	265	230	16	14	5	520.5	68
A 50 2/3	**P160**	—	42	45.3	12	350	300	250	23	18	5.5	571	72
A 50 2/3	**P180**	—	48	51.8	14	350	300	250	23	18	5.5	571	72
A 50 4	**P63**	—	11	12.8	4	140	115	95	—	M8x19	4	526	62
A 50 4	**P71**	—	14	16.3	5	160	130	110	—	M8x16	4.5	526	62
A 50 4	**P80**	—	19	21.8	6	200	165	130	—	M10x14.5	4	545.5	63
A 50 4	**P90**	—	24	27.3	8	200	165	130	—	M10x14.5	4	545.5	63
A 50 4	**P100**	—	28	31.3	8	250	215	180	—	M12x16	4.5	555.5	67
A 50 4	**P112**	—	28	31.3	8	250	215	180	—	M12x16	4.5	555.5	67

A 50...HS

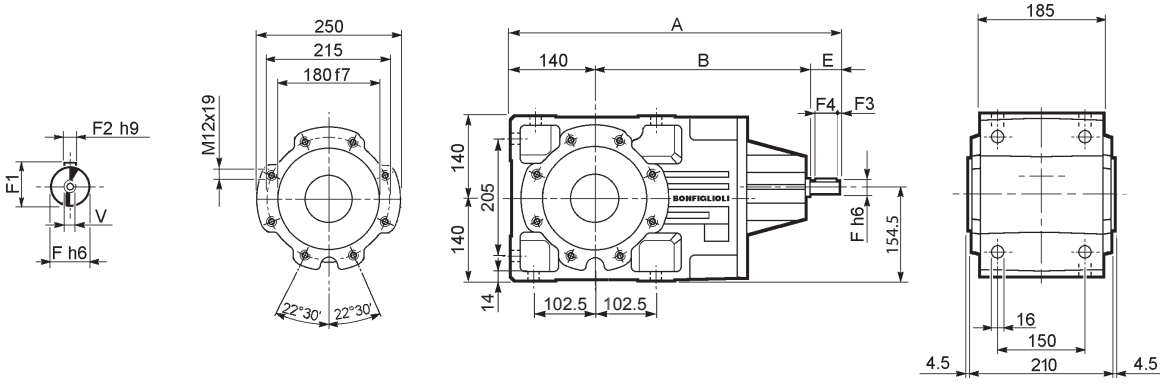

		A	B	E	F	F1	F2	F3	F4	V	Kg
A 50 2		543.5	353.5	50	24	27	8	2.5	45	M8x19	72
A 50 3	**HS**	543.5	353.5	50	24	27	8	2.5	45	M8x19	76
A 50 4		576	396	40	19	21.5	6	2.5	35	M6x16	77

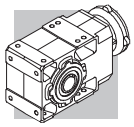

A 50...SK / SC

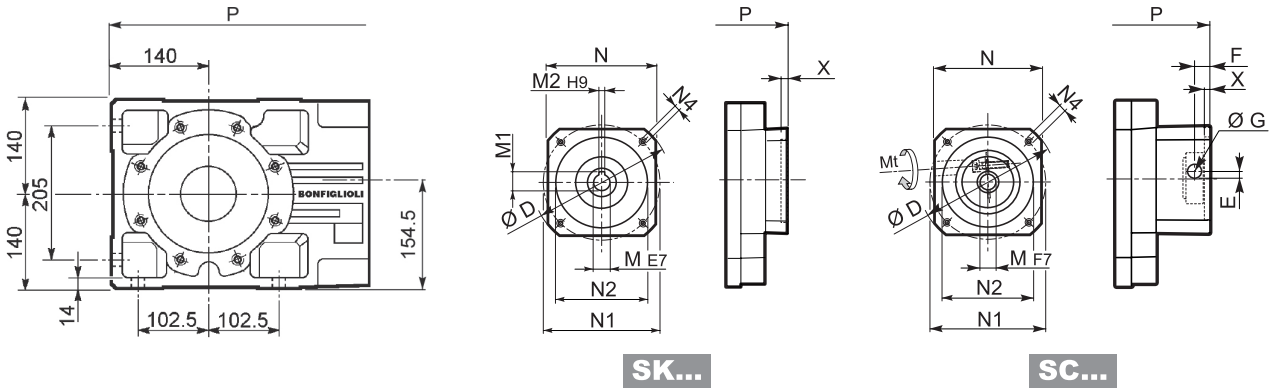

		D	M	M1	M2	N	N1	N2	N4	X	P 2/3x	P 4x	Kg
A 50 2/3	**SK80B**	120	14	16.3	5	96	100	80	M6x12	4	474	—	61/61
A 50 2/3/4	**SK80C**	120	19	21.8	6	96	100	80	M6x12	4	474	545.5	61/61/63
A 50 2/3/4	**SK95A**	130	14	16.3	5	102	115	95	M8x12	4	474	545.5	61/61/63
A 50 2/3/4	**SK95B**	130	19	21.8	6	102	115	95	M8x12	4	474	545.5	61/61/63
A 50 2/3/4	**SK95C**	130	24	27.3	8	102	115	95	M8x12	4	474	545.5	61/61/63
A 50 2/3/4	**SK110A**	150	19	21.8	6	120	130	110	M8x12	5	474	545.5	61/61/65
A 50 2/3/4	**SK110B**	150	24	27.3	8	120	130	110	M8x12	5	474	575	61/61/65
A 50 2/3/4	**SK130A**	188	24	27.3	8	142	165	130	M10x20	5	474	575	63/63/66
A 50 2/3	**SK130B**	189	32	35.3	10	160	165	130	M10x20	5	520.5	—	69/69
A 50 2/3	**SK180A**	240	32	35.3	10	192	215	180	M12x19	5	520.5	—	69/69
A 50 2/3	**SK180B**	240	38	41.3	10	192	215	180	M12x19	5	520.5	—	69/69

		Mt [Nm]	D	E	F	G	M	N	N1	N2	N4	X	P 2/3x	P 3x	Kg
A 50 2/3	**SC80B**	M6 15	120	15.5	14.5	17.75	14	96	100	80	M6x12	4	497.5	—	62/62
A 50 2/3/4	**SC80C**	M6 15	120	15.5	14.5	17.75	19	96	100	80	M6x12	4	497.5	569	62/62/64
A 50 2/3/4	**SC95A**	M6 15	130	16.5	15	17.75	14	102	115	95	M8x16	4	497.5	569	62/62/64
A 50 2/3/4	**SC95B**	M6 15	130	16.5	15	17.75	19	102	115	95	M8x16	4	497.5	569	62/62/64
A 50 2/3/4	**SC95C**	M6 15	130	16.5	15	17.75	24	102	115	95	M8x16	4	497.5	569	62/62/64
A 50 2/3/4	**SC110A**	M6 15	150	16.5	16	17.75	19	120	130	110	M8x16	5	497.5	569	63/63/66
A 50 2/3/4	**SC110B**	M6 15	150	16.5	16	17.75	24	120	130	110	M8x16	5	497.5	569	63/63/66
A 50 2/3/4	**SC130A**	M6 15	188	19	16	17.75	24	142	165	130	M10x20	5	497.5	569	64/64/67
A 50 2/3	**SC130B**	M8 36	189	20	17	17.75	32	160	165	130	M10x20	5	543.5	—	68/68
A 50 2/3	**SC180A**	M8 36	240	20	17.5	17.75	32	192	215	180	M12x24	5	547.5	—	68/68
A 50 2/3	**SC180B**	M8 36	240	20	17.5	17.75	38	192	215	180	M12x24	5	547.5	—	68/68

A 50...F...

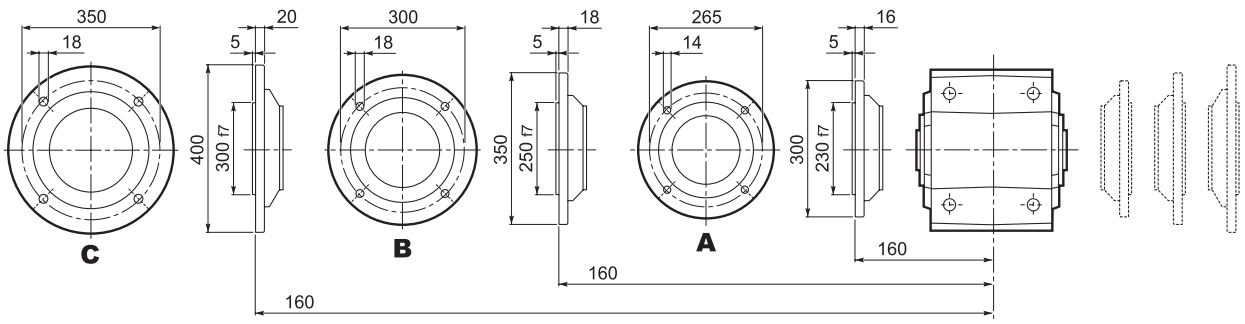

Bonfiglioli Riduttori

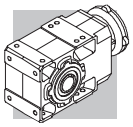

A 50

A 50...UR

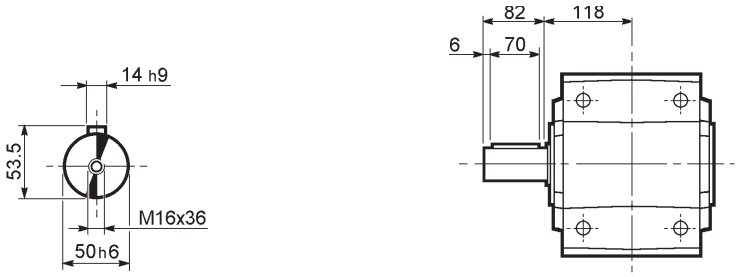

A 50...UD

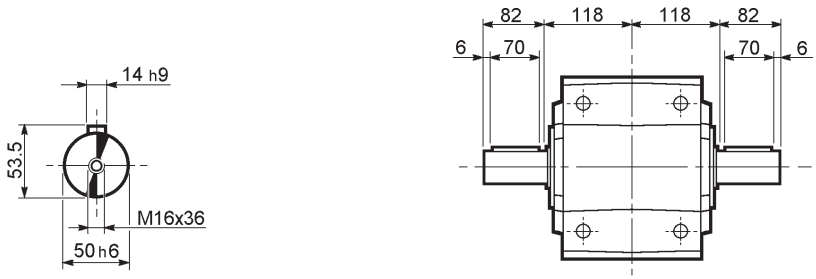

A 50...UH

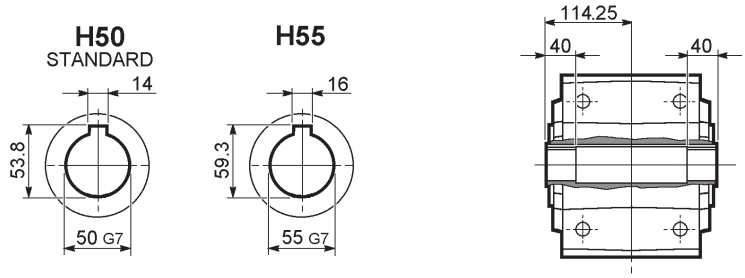

A 50...US

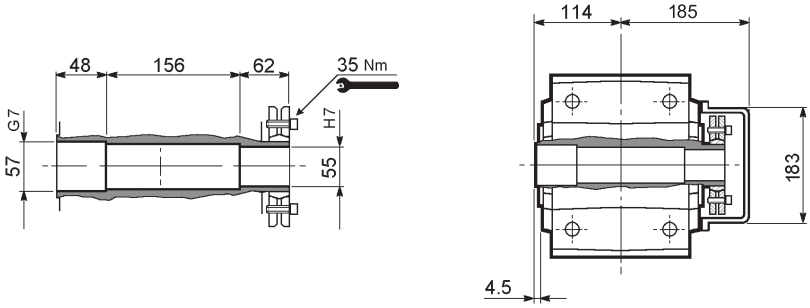

A 50...QF

	Ø
QF50	50
QF55	55

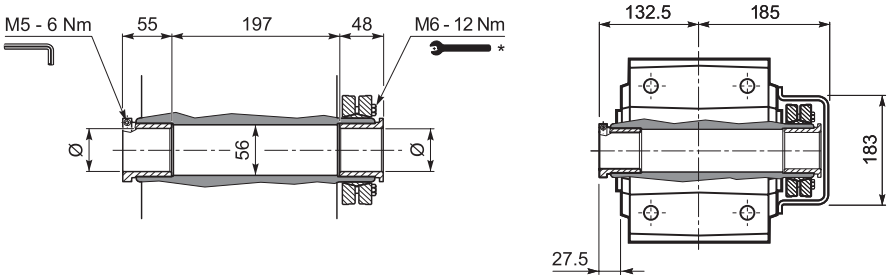

A 50...UV

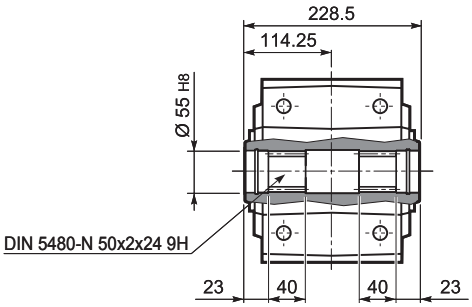

详细安装指南见随机文件

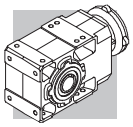

A 55...M/ME/MX

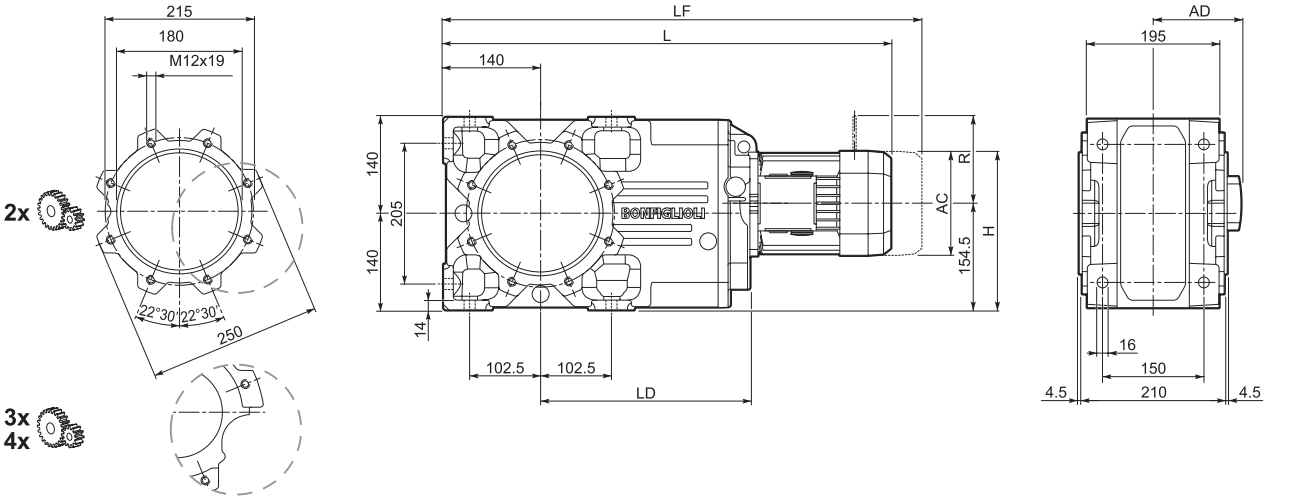

										M...FD M...FA		M...FD		M...FA	
				AC	H	L	LD	AD	Kg	LF	Kg	R	AD	R	AD
A 55 3	**S1**	**M1**		138	198.5	627.5	—	108	81	688.5	84	103	135	124	108
A 55 2/3	**S2**	**ME2S**		156	232	656.5	302.5	119	88	—	—	—	—	—	—
A 55 2/3	**S2**	**MX2S**		156	232	700.5	302.5	119	93.1	—	—	—	—	—	—
A 55 2/3	**S3**	**ME3S**		195	251	699.5	317.5	142	94.5	—	—	—	—	—	—
A 55 2/3	**S3**	**MX3S**		195	251	731.5	317.5	142	97.5	—	—	—	—	—	—
A 55 2/3	**S3**	**ME3L**		195	251	731.5	317.5	142	101	—	—	—	—	—	—
A 55 2/3	**S3**	**MX3L**		195	251	775.5	317.5	142	107	—	—	—	—	—	—
A 55 2/3	**S4**	**ME4**	**MX4**	258	283	839.5	302.5	193	135	—	—	—	—	—	—
A 55 2/3	**S4**	**ME4LB**	**MX4LA**	258	283	874.5	302.5	193	143	—	—	—	—	—	—
A 55 2/3	**S5**	**ME5S**	**MX5S**	310	309.5	926	—	245	163	—	—	—	—	—	—
A 55 2/3	**S5**	**ME5L**	**MX5L**	310	309.5	970	—	245	179	—	—	—	—	—	—
A 55 4	**S1**	**M1**		138	223	699	—	108	82	760	85	103	135	124	108
A 55 4	**S2**	**ME2S**		156	232	728	—	119	86	—	—	—	—	—	—
A 55 4	**S2**	**MX2S**		156	232	772	—	119	91.1	—	—	—	—	—	—
A 55 4	**S3**	**ME3S**		195	251.5	771	—	142	92.5	—	—	—	—	—	—
A 55 4	**S3**	**MX3S**		195	251.5	803	—	142	95.5	—	—	—	—	—	—
A 55 4	**S3**	**ME3L**		195	251.5	803	—	142	98	—	—	—	—	—	—
A 55 4	**S3**	**MX3L**		195	251.5	847	—	142	104	—	—	—	—	—	—

A 55...P(IEC)

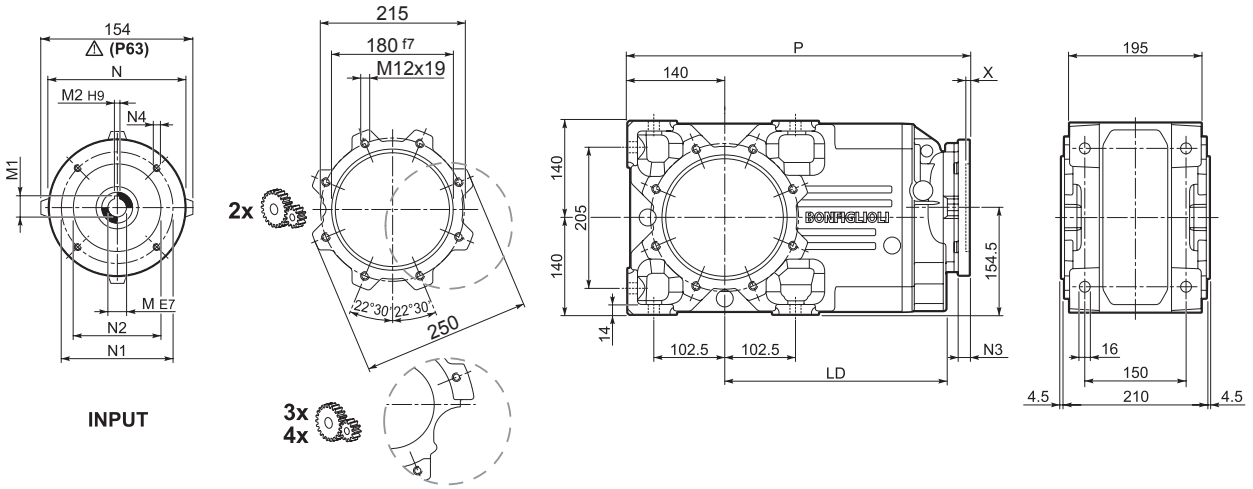

		LD	M	M1	M2	N	N1	N2	N3	N4	X	P	Kg
A 55 3	**P63**	302.5	11	12.8	4	140	115	95	—	M8x19	4	472.5	75
A 55 3	**P71**	302.5	14	16.3	5	160	130	110	—	M8x16	4.5	472.5	75
A 55 2/3	**P80**	317.5	19	21.8	6	200	165	130	—	M10x14.5	4	492	81
A 55 2/3	**P90**	317.5	24	27.3	8	200	165	130	—	M10x14.5	4	492	81
A 55 2/3	**P100**	302.5	28	31.3	8	250	215	180	—	M12x16	4.5	502	85
A 55 2/3	**P112**	302.5	28	31.3	8	250	215	180	—	M12x16	4.5	502	85
A 55 2/3	**P132**	302.5	38	41.3	10	300	265	230	16	14	5	538.5	93
A 55 2/3	**P160**	—	42	45.3	12	350	300	250	23	18	5.5	589	110
A 55 2/3	**P180**	—	48	51.8	14	350	300	250	23	18	5.5	589	110
A 55 4	**P63**	—	11	12.8	4	140	115	95	—	M8x19	4	544	77
A 55 4	**P71**	—	14	16.3	5	160	130	110	—	M8x16	4.5	544	77
A 55 4	**P80**	—	19	21.8	6	200	165	130	—	M10x14.5	4	563.5	78
A 55 4	**P90**	—	24	27.3	8	200	165	130	—	M10x14.5	4	563.5	78
A 55 4	**P100**	—	28	31.3	8	250	215	180	—	M12x16	4.5	573.5	82
A 55 4	**P112**	—	28	31.3	8	250	215	180	—	M12x16	4.5	573.5	82

A 55...HS

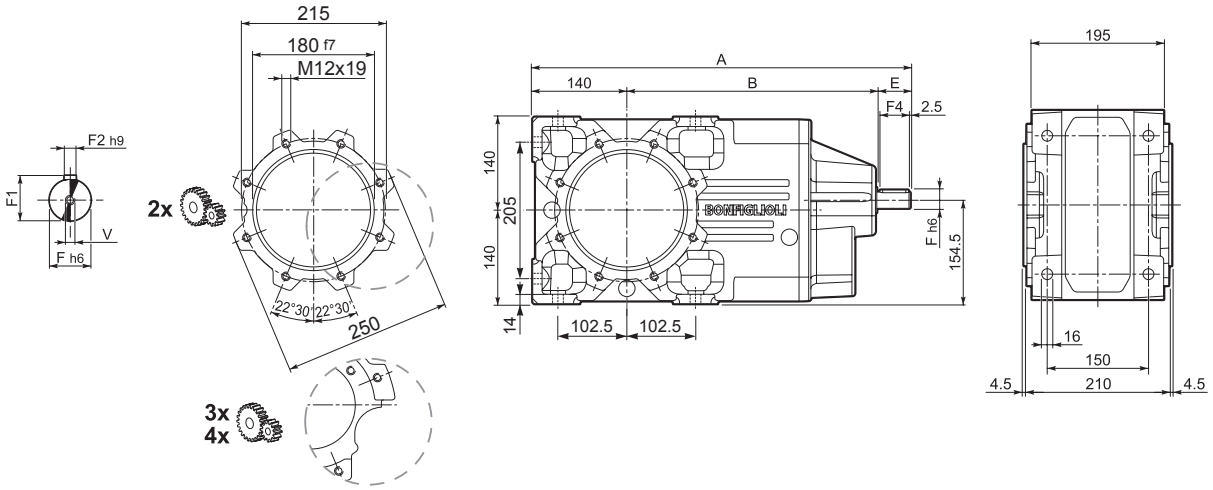

		A	B	E	F	F1	F2	F3	F4	V	Kg
A 55 2		561.5	371.5	50	24	27	8	2.5	45	M8x19	96
A 55 3	**HS**	561.5	371.5	50	24	27	8	2.5	45	M8x19	91
A 55 4		594	414	40	19	21.5	6	2.5	35	M6x16	92

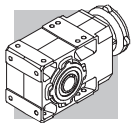

A 55...SK / SC

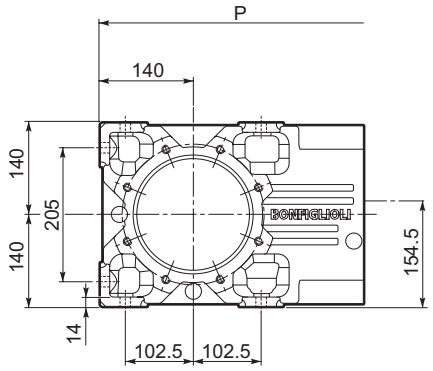

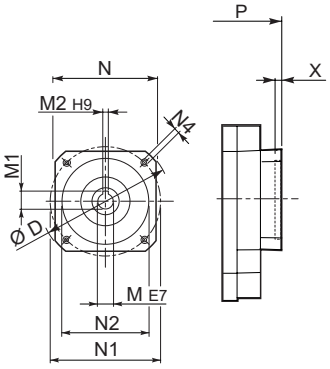

SK...

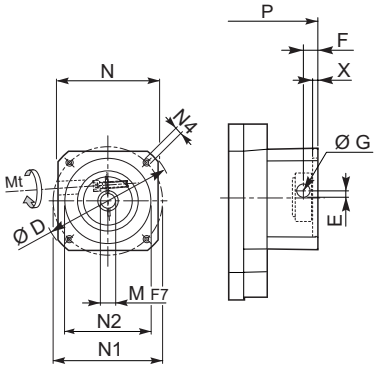

SC...

		D	M	M1	M2	N	N1	N2	N4	X	P 2/3x	P 4x	Kg
A 55 3	**SK80B**	120	14	16.3	5	96	100	80	M6x12	4	492	—	81
A 55 2/3/4	**SK80C**	120	19	21.8	6	96	100	80	M6x12	4	492	563.5	81/81/77
A 55 3/4	**SK95A**	130	14	16.3	5	102	115	95	M8x12	4	492	563.5	81/81/77
A 55 2/3/4	**SK95B**	130	19	21.8	6	102	115	95	M8x12	4	492	563.5	81/81/77
A 55 2/3/4	**SK95C**	130	24	27.3	8	102	115	95	M8x12	4	492	563.5	81/81/77
A 55 2/3/4	**SK110A**	150	19	21.8	6	120	130	110	M8x12	5	492	593	81/81/78
A 55 2/3/4	**SK110B**	150	24	27.3	8	120	130	110	M8x12	5	492	593	81/81/78
A 55 2/3/4	**SK130A**	188	24	27.3	8	142	165	130	M10x20	5	492	593	83/83/79
A 55 2/3	**SK130B**	189	32	35.3	10	160	165	130	M10x20	5	538.5	—	90/90
A 55 2/3	**SK180A**	240	32	35.3	10	192	215	180	M12x19	5	538.5	—	90/90
A 55 2/3	**SK180B**	240	38	41.3	10	192	215	180	M12x19	5	538.5	—	90/90

			Mt [Nm]	D	E	F	G	M	N	N1	N2	N4	X	P 2/3x	P 3x	Kg
A 55 3	**SC80B**	M6	15	120	15.5	14.5	17.75	14	96	100	80	M6x12	4	515.5	—	82
A 55 2/3/4	**SC80C**	M6	15	120	15.5	14.5	17.75	19	96	100	80	M6x12	4	515.5	587	82/82/78
A 55 3/4	**SC95A**	M6	15	130	16.5	15	17.75	14	102	115	95	M8x16	4	515.5	587	82/82/78
A 55 2/3/4	**SC95B**	M6	15	130	16.5	15	17.75	19	102	115	95	M8x16	4	515.5	587	82/82/78
A 55 2/3/4	**SC95C**	M6	15	130	16.5	15	17.75	24	102	115	95	M8x16	4	515.5	587	82/82/78
A 55 2/3/4	**SC110A**	M6	15	150	16.5	16	17.75	19	120	130	110	M8x16	5	515.5	587	83/83/79
A 55 2/3/4	**SC110B**	M6	15	150	16.5	16	17.75	24	120	130	110	M8x16	5	515.5	587	83/83/79
A 55 2/3/4	**SC130A**	M6	15	188	19	16	17.75	24	142	165	130	M10x20	5	515.5	587	84/84/80
A 55 2/3	**SC130B**	M8	36	189	20	17	17.75	32	160	165	130	M10x20	5	561.5	—	93/93
A 55 2/3	**SC180A**	M8	36	240	20	17.5	17.75	32	192	215	180	M12x24	5	565.5	—	93/93
A 55 2/3	**SC180B**	M8	36	240	20	17.5	17.75	38	192	215	180	M12x24	5	565.5	—	93/93

A 55...F...

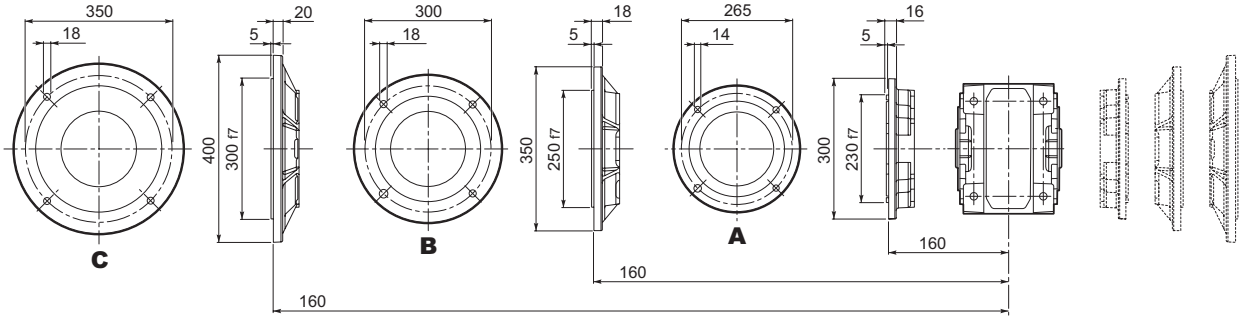

Bonfiglioli Riduttori

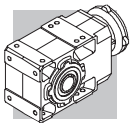

A 55

A 55...UR

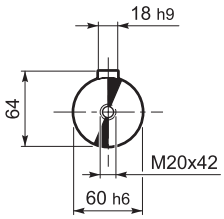

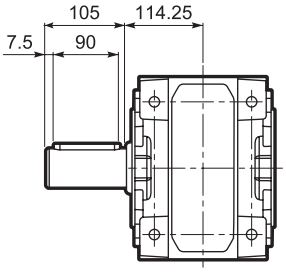

A 55...UD

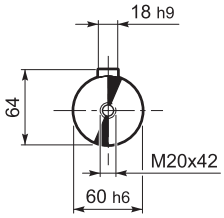

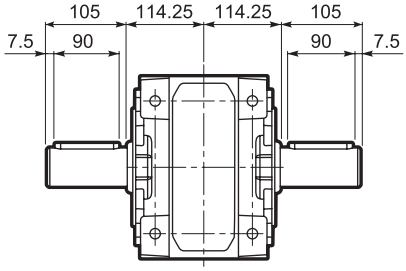

A 55...UH

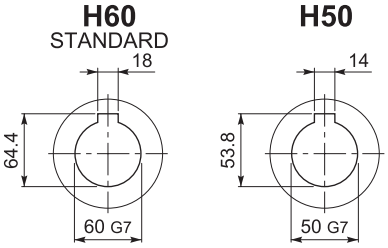

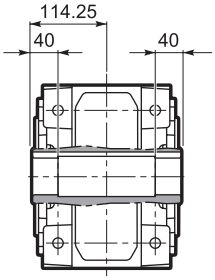

A 55...US

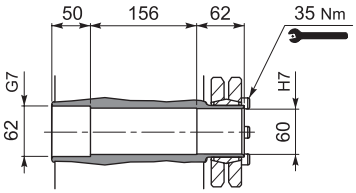

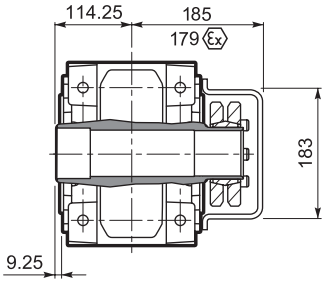

A 55...QF

	Ø
QF55	55
QF60	60

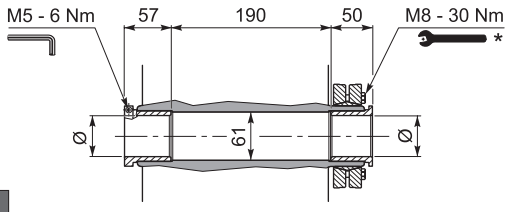

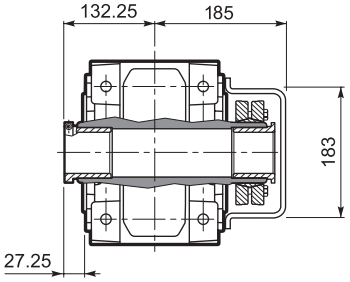

$M_{n2\ max}$ [Nm]	
A 55 QF55	1900

A 55...UV

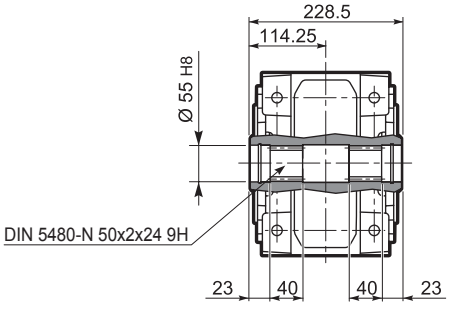

详细安装指南见随机文件

A 60...M/ME/MX

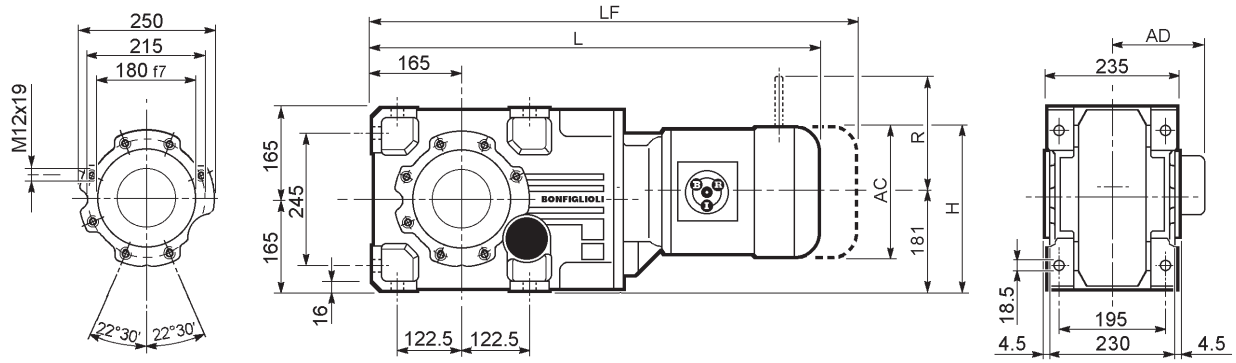

									M...FD M...FA		M...FD		M...FA	
				AC	H	L	AD	Kg	LF	Kg	R	AD	R	AD
A 60 2/3	**S2**	**ME2S**		156	256.5	700.5	119	98	—	—	—	—	—	—
A 60 2/3	**S2**	**MX2S**		156	256.5	744.5	119	103.1	—	—	—	—	—	—
A 60 2/3	**S3**	**ME3S**		195	276	743.5	142	103	—	—	—	—	—	—
A 60 2/3	**S3**	**MX3S**		195	276	775.5	142	106	—	—	—	—	—	—
A 60 2/3	**S3**	**ME3L**		195	276	775.5	142	111	—	—	—	—	—	—
A 60 2/3	**S3**	**MX3L**		195	276	819.5	142	117	—	—	—	—	—	—
A 60 2/3	**S4**	**ME4**	**MX4**	258	307.5	883.5	193	145	—	—	—	—	—	—
A 60 2/3	**S4**	**ME4LB**	**MX4LA**	258	307.5	918.5	193	153	—	—	—	—	—	—
A 60 2/3	**S5**	**ME5S**	**MX5S**	310	333.5	970	245	173	—	—	—	—	—	—
A 60 2/3	**S5**	**ME5L**	**MX5L**	310	333.5	1014	245	189	—	—	—	—	—	—
A 60 4	**S1**	**M1**		138	247.5	742	108	100	803	103	103	135	124	108
A 60 4	**S2**	**ME2S**		156	256.5	771	119	104	—	—	—	—	—	—
A 60 4	**S2**	**MX2S**		156	256.5	815	119	109.1	—	—	—	—	—	—
A 60 4	**S3**	**ME3S**		195	276	814	142	109	—	—	—	—	—	—
A 60 4	**S3**	**MX3S**		195	276	846	142	112	—	—	—	—	—	—
A 60 4	**S3**	**ME3L**		195	276	846	142	117	—	—	—	—	—	—
A 60 4	**S3**	**MX3L**		195	276	890	142	123	—	—	—	—	—	—

A 60...P(IEC)

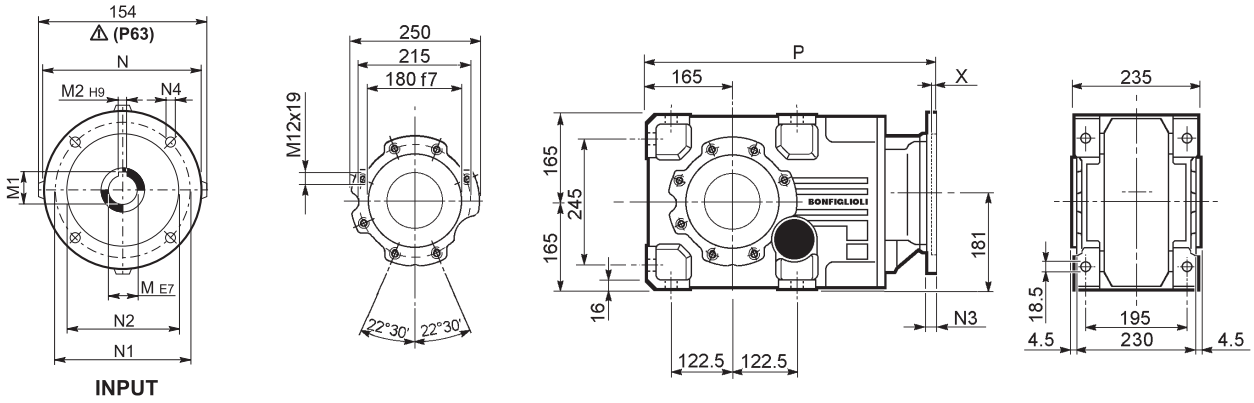

		M	M1	M2	N	N1	N2	N3	N4	X	P	Kg
A 60 3	**P63**	11	12.8	4	140	115	95	—	M8x19	4	516.5	90
A 60 3	**P71**	14	16.3	5	160	130	110	—	M8x16	4.5	516.5	90
A 60 2/3	**P80**	19	21.8	6	200	165	130	—	M10x14.5	4	536	91
A 60 2/3	**P90**	24	27.3	8	200	165	130	—	M10x14.5	4	536	91
A 60 2/3	**P100**	28	31.3	8	250	215	180	—	M12x16	4.5	546	95
A 60 2/3	**P112**	28	31.3	8	250	215	180	—	M12x16	4.5	546	95
A 60 2/3	**P132**	38	41.3	10	300	265	230	16	14	5	582.5	104
A 60 2/3	**P160**	42	45.3	12	350	300	250	23	18	5.5	633	121
A 60 2/3	**P180**	48	51.8	14	350	300	250	23	18	5.5	633	121
A 60 4	**P63**	11	12.8	4	140	115	95	—	M8x19	4	587	88
A 60 4	**P71**	14	16.3	5	160	130	110	—	M8x16	4.5	587	88
A 60 4	**P80**	19	21.8	6	200	165	130	—	M10x14.5	4	606.5	90
A 60 4	**P90**	24	27.3	8	200	165	130	—	M10x14.5	4	606.5	90
A 60 4	**P100**	28	31.3	8	250	215	180	—	M12x16	4.5	616.5	94
A 60 4	**P112**	28	31.3	8	250	215	180	—	M12x16	4.5	616.5	94

A 60...HS

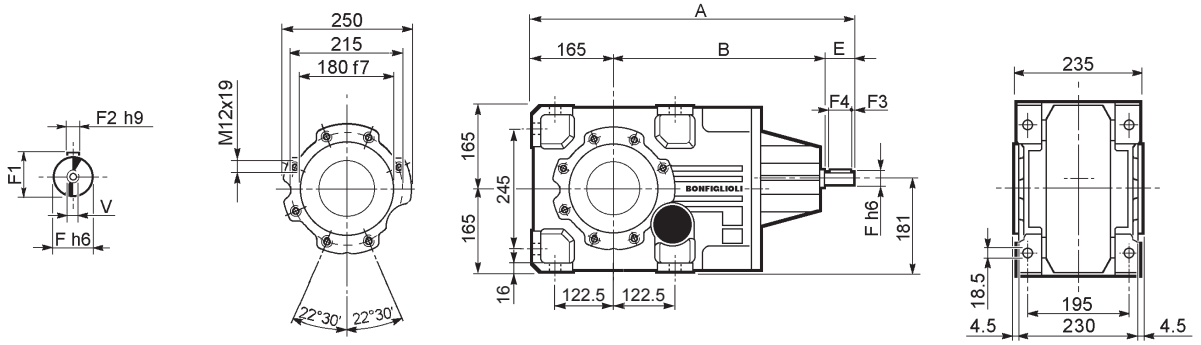

		A	B	E	F	F1	F2	F3	F4	V	Kg
A 60 2		633	408	60	28	31	8	5.0	50	M10x22	106
A 60 3	**HS**	633	408	60	28	31	8	5.0	50	M10x22	106
A 60 4		676	461	50	24	27	8	2.5	45	M8x19	112

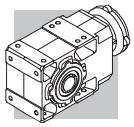

A 60...SK / SC

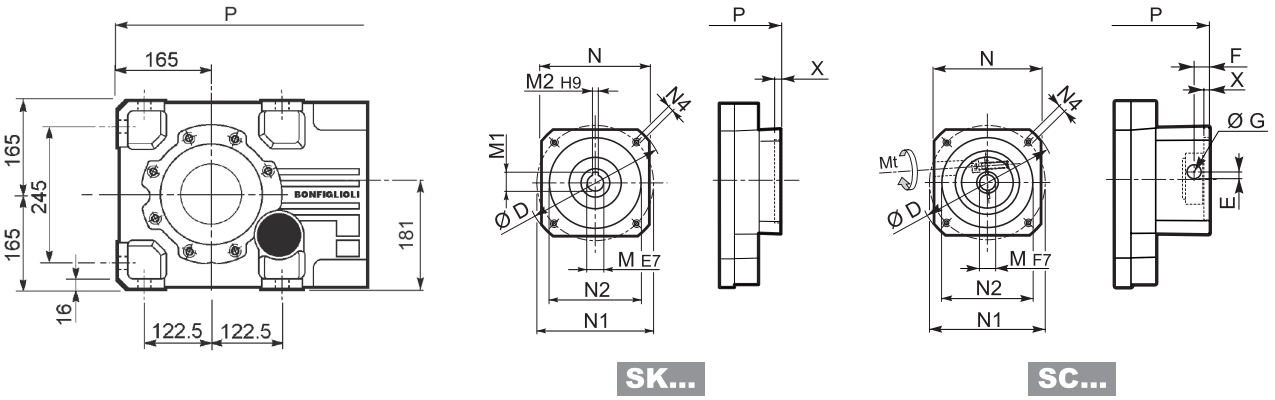

		D	M	M1	M2	N	N1	N2	N4	X	P 2/3x	P 4x	Kg
A 60 4	**SK80B**	120	14	16.3	5	96	100	80	M6x12	4	—	606.5	89
A 60 2/3/4	**SK80C**	120	19	21.8	6	96	100	80	M6x12	4	536	606.5	93/93/92
A 60 2/3/4	**SK95A**	130	14	16.3	5	102	115	95	M8x12	4	536	606.5	93/93/92
A 60 2/3/4	**SK95B**	130	19	21.8	6	102	115	95	M8x12	4	536	606.5	93/93/92
A 60 2/3/4	**SK95C**	130	24	27.3	8	102	115	95	M8x12	4	536	606.5	93/93/92
A 60 2/3/4	**SK110A**	140	19	21.8	6	120	130	110	M8x12	5	536	606.5	93/93/92
A 60 2/3/4	**SK110B**	140	24	27.3	8	120	130	110	M8x12	5	536	606.5	93/93/92
A 60 2/3/4	**SK130A**	188	24	27.3	8	142	165	130	M10x20	5	536	606.5	97/97/103
A 60 2/3	**SK130B**	189	32	35.3	10	160	165	130	M10x20	5	582.5	—	102/102
A 60 2/3	**SK180A**	240	32	35.3	10	192	215	180	M12x19	5	582.5	—	102/102
A 60 2/3	**SK180B**	240	38	41.3	10	192	215	180	M12x19	5	582.5	—	102/102

			Mt [Nm]	D	E	F	G	M	N	N1	N2	N4	X	P 2/3x	P 3x	Kg
A 60 4	**SC80B**	M6	15	120	15.5	14.5	17.75	14	96	100	80	M6x12	4	—	630	90
A 60 2/3/4	**SC80C**	M6	15	120	15.5	14.5	17.75	19	96	100	80	M6x12	4	559.5	630	94/94/93
A 60 2/3/4	**SC95A**	M6	15	130	16.5	15	17.75	14	102	115	95	M8x16	4	559.5	630	94/94/93
A 60 2/3/4	**SC95B**	M6	15	130	16.5	15	17.75	19	102	115	95	M8x16	4	559.5	630	94/94/93
A 60 2/3/4	**SC95C**	M6	15	130	16.5	15	17.75	24	102	115	95	M8x16	4	559.5	630	94/94/93
A 60 2/3/4	**SC110A**	M6	15	140	16.5	16	17.75	19	120	130	110	M8x16	5	559.5	630	95/95/93
A 60 2/3/4	**SC110B**	M6	15	140	16.5	16	17.75	24	120	130	110	M8x16	5	559.5	630	95/95/93
A 60 2/3/4	**SC130A**	M6	15	188	19	16	17.75	24	142	165	130	M10x20	5	559.5	630	96/96/104
A 60 2/3	**SC130B**	M8	36	189	20	17	17.75	32	160	165	130	M10x20	5	605.5	—	105/105
A 60 2/3	**SC180A**	M8	36	240	20	17.5	17.75	32	192	215	180	M12x24	5	609.5	—	105/105
A 60 2/3	**SC180B**	M8	36	240	20	17.5	17.75	38	192	215	180	M12x24	5	609.5	—	105/105

A 60...F...

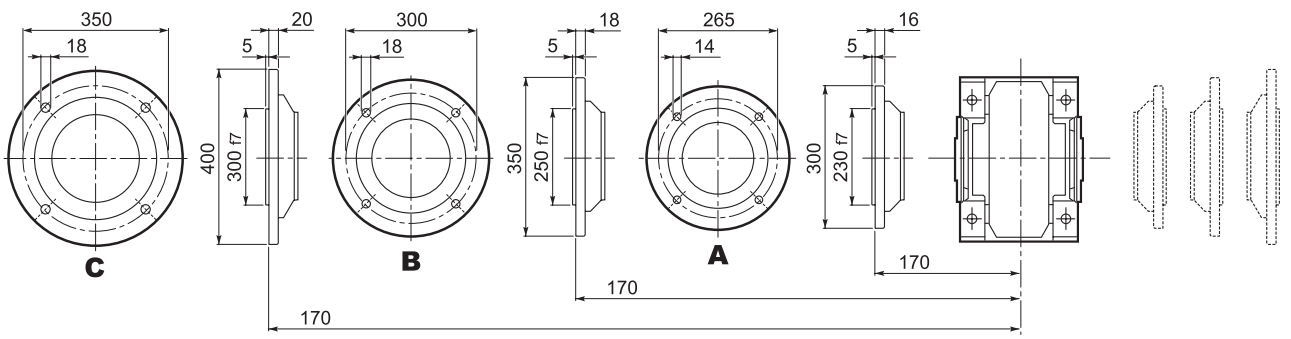

Bonfiglioli Riduttori

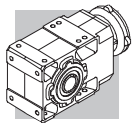

A 60

A 60...UR

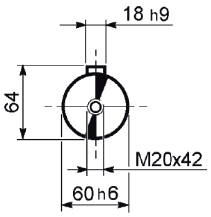

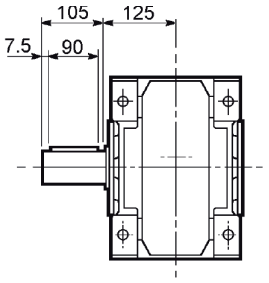

A 60...UD

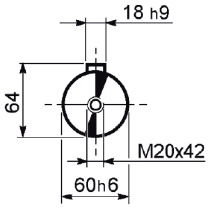

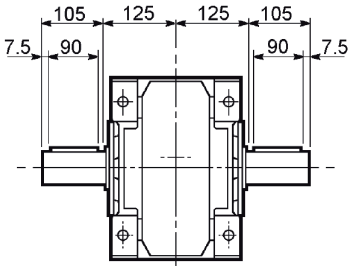

A 60...UH

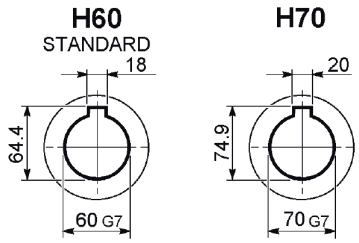

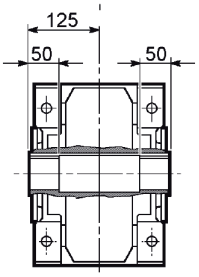

A 60...US

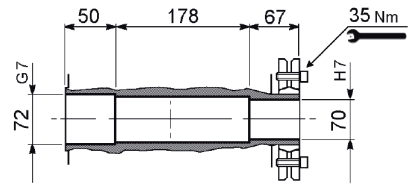

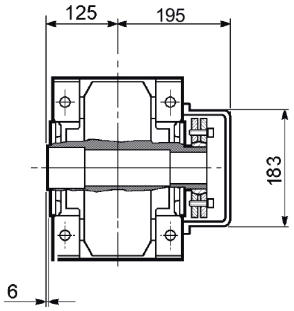

A 60...QF

	Ø
QF60	60
QF65	65
QF70	70

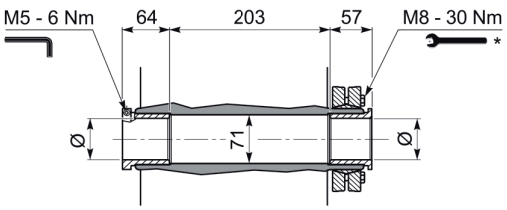

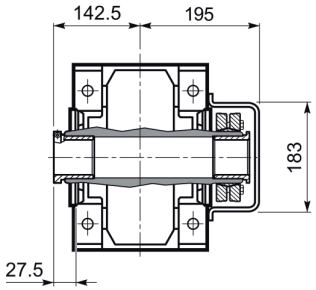

A 60...UV

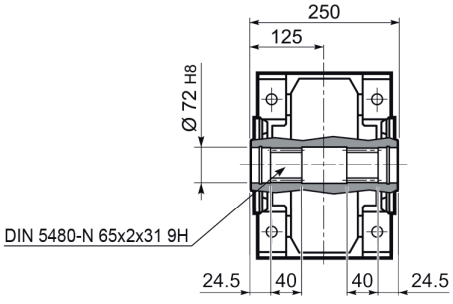

详细安装指南见随机文件

A 70...M/ME/MX

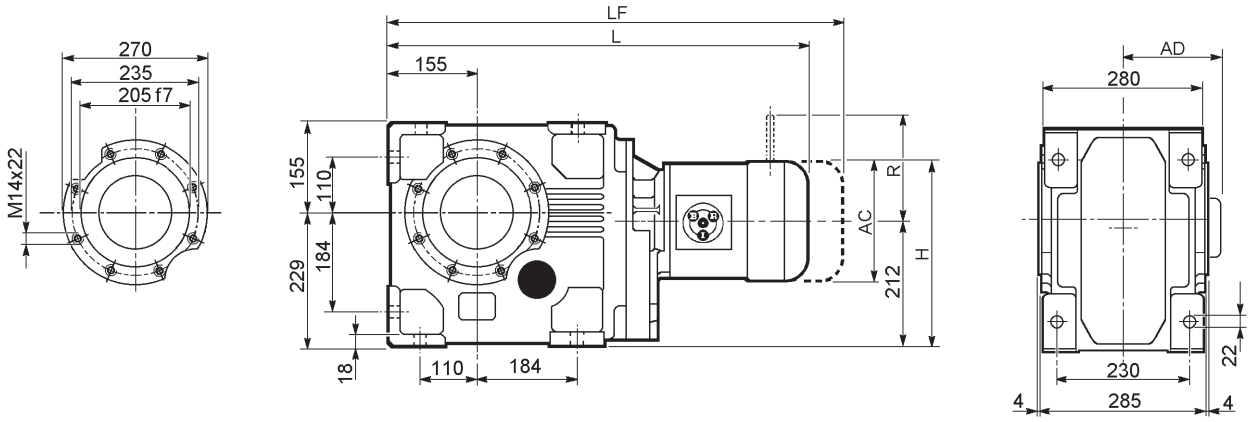

									M...FD M...FA		M...FD		M...FA	
				AC	H	L	AD	Kg	LF	Kg	R	AD	R	AD
A 70 3	**S2**	**ME2S**		156	290	688.5	119	152	—	—	—	—	—	—
A 70 3	**S2**	**MX2S**		156	290	732.5	119	157.1	—	—	—	—	—	—
A 70 3	**S3**	**ME3S**		195	309.5	731.5	142	158.5	—	—	—	—	—	—
A 70 3	**S3**	**MX3S**		195	309.5	763.5	142	161.5	—	—	—	—	—	—
A 70 3	**S3**	**ME3L**		195	309.5	763.5	142	164	—	—	—	—	—	—
A 70 3	**S3**	**MX3L**		195	309.5	807.5	142	170	—	—	—	—	—	—
A 70 3	**S4**	**ME4**	**MX4**	258	341	872.5	193	198	—	—	—	—	—	—
A 70 3	**S4**	**ME4LB**	**MX4LA**	258	341	907.5	193	206	—	—	—	—	—	—
A 70 3	**S5**	**ME5S**	**MX5S**	310	367	958	245	226	—	—	—	—	—	—
A 70 3	**S5**	**ME5L**	**MX5L**	310	367	1002	245	242	—	—	—	—	—	—
A 70 4	**S1**	**M1**		138	281	710.5	108	152	771.5	155	103	135	124	108
A 70 4	**S2**	**ME2S**		156	290	739.5	119	156	—	—	—	—	—	—
A 70 4	**S2**	**MX2S**		156	290	783.5	119	161.1	—	—	—	—	—	—
A 70 4	**S3**	**ME3S**		195	309.5	782.5	142	162.5	—	—	—	—	—	—
A 70 4	**S3**	**MX3S**		195	309.5	814.5	142	165.5	—	—	—	—	—	—
A 70 4	**S3**	**ME3L**		195	309.5	814.5	142	168	—	—	—	—	—	—
A 70 4	**S3**	**MX3L**		195	309.5	858.5	142	174	—	—	—	—	—	—
A 70 4	**S4**	**ME4**	**MX4**	258	341	922.5	193	202	—	—	—	—	—	—
A 70 4	**S4**	**ME4LB**	**MX4LA**	258	341	957.5	193	210	—	—	—	—	—	—

A 70...P (IEC)

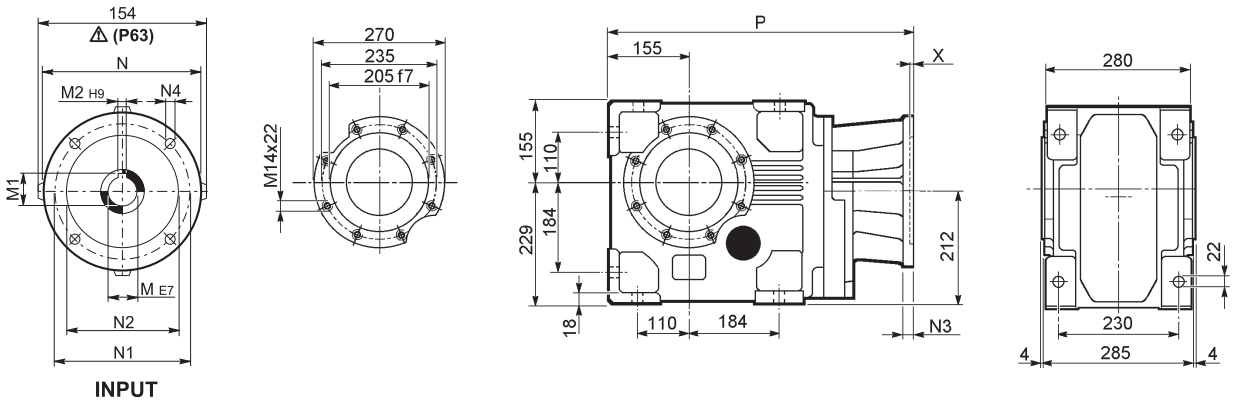

		M	M1	M2	N	N1	N2	N3	N4	X	P	Kg
A 70 3	**P80**	19	21.8	6	200	165	130	—	M10x14.5	4	524	144
A 70 3	**P90**	24	27.3	8	200	165	130	—	M10x14.5	4	524	144
A 70 3	**P100**	28	31.3	8	250	215	180	—	M12x16	4.5	534	146
A 70 3	**P112**	28	31.3	8	250	215	180	—	M12x16	4.5	534	146
A 70 3	**P132**	38	41.3	10	300	265	230	16	14	5	570.5	154
A 70 3	**P160**	42	45.3	12	350	300	250	23	18	6	626	169
A 70 3	**P180**	48	51.8	14	350	300	250	23	18	6	626	169
A 70 3	**P200**	55	59.3	16	400	350	300	—	M16x25	7	651	179
A 70 4	**P63**	11	12.8	4	140	115	95	—	M8x19	4	555.5	146
A 70 4	**P71**	14	16.3	5	160	130	110	—	M8x16	4.5	555.5	146
A 70 4	**P80**	19	21.8	6	200	165	130	—	M10x14.5	4	575	147
A 70 4	**P90**	24	27.3	8	200	165	130	—	M10x14.5	4	575	147
A 70 4	**P100**	28	31.3	8	250	215	180	—	M12x16	4.5	585	148
A 70 4	**P112**	28	31.3	8	250	215	180	—	M12x16	4.5	585	148
A 70 4	**P132**	38	41.3	10	300	265	230	16	14	5	618.5	157

A 70...HS

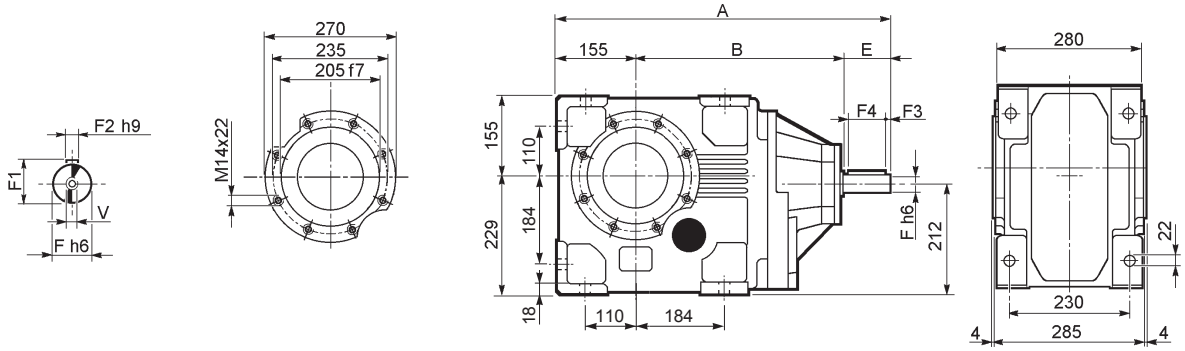

		A	B	E	F	F1	F2	F3	F4	V	Kg
A 70 3	**HS**	708.5	443.5	110	42	45	12	10	90	M12x28	165
A 70 4		644.5	439.5	50	24	27	8	2.5	45	M8x19	149

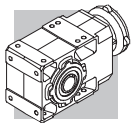

A 70

A 70...UR

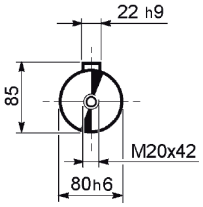

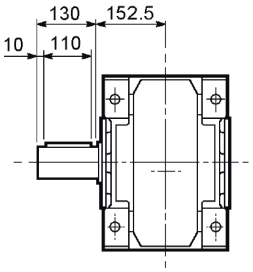

A 70...UD

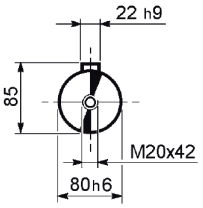

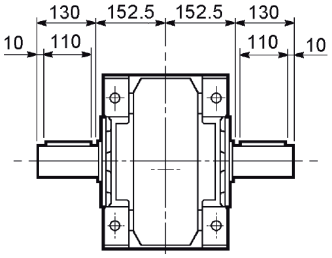

A 70...UH

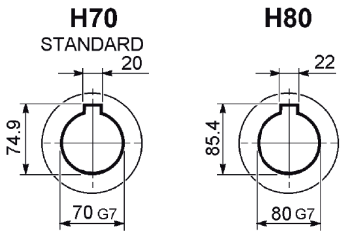

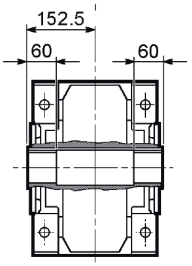

A 70...US

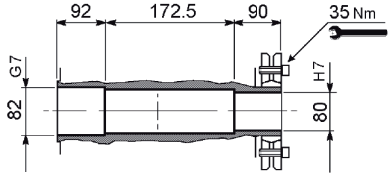

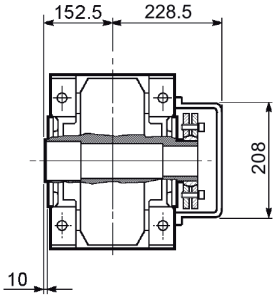

A 70...F...

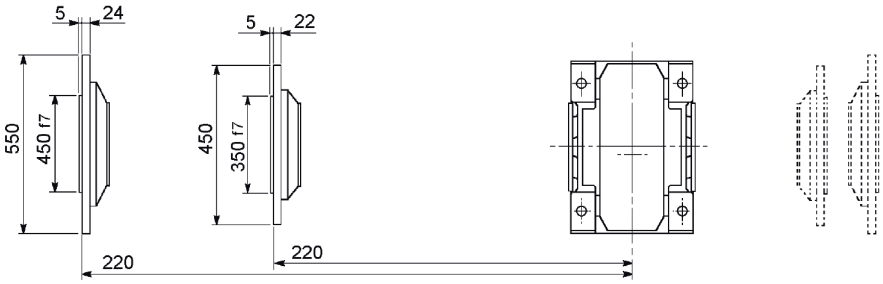

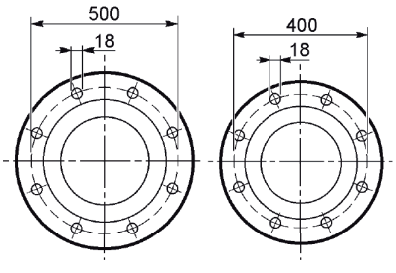

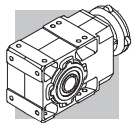

A 80...M/ME/MX

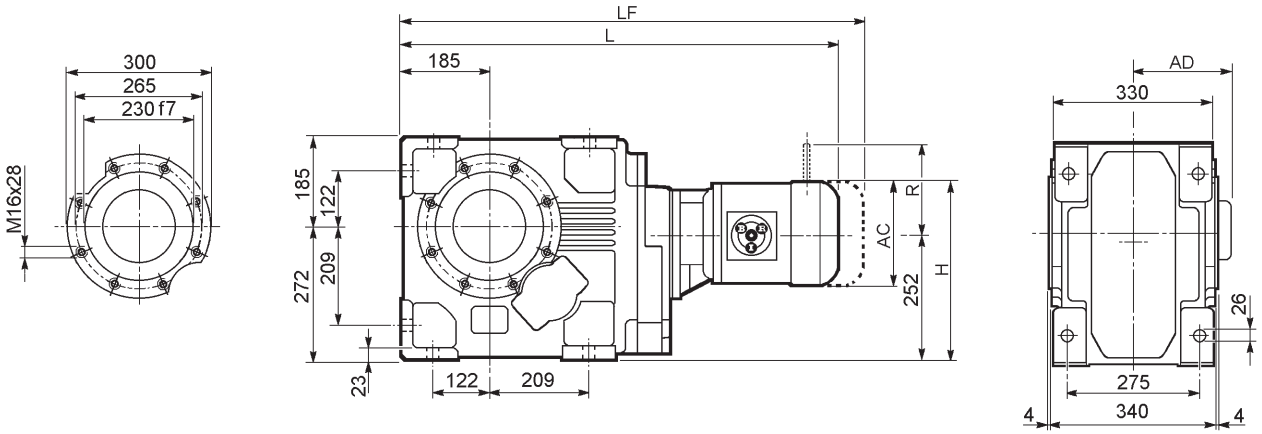

									M...FD M...FA		M...FD		M...FA	
				AC	H	L	AD	Kg	LF	Kg	R	AD	R	AD
A 80 3	**S3**	**ME3S**		195	349.5	809.5	142	257.5	—	—	—	—	—	—
A 80 3	**S3**	**MX3S**		195	349.5	841.5	142	260.5	—	—	—	—	—	—
A 80 3	**S3**	**ME3L**		195	349.5	841.5	142	264	—	—	—	—	—	—
A 80 3	**S3**	**MX3L**		195	349.5	885.5	142	270	—	—	—	—	—	—
A 80 3	**S4**	**ME4**	**MX4**	258	381	949.5	193	298	—	—	—	—	—	—
A 80 3	**S4**	**ME4LB**	**MX4LA**	258	381	984.5	193	306	—	—	—	—	—	—
A 80 3	**S5**	**ME5S**	**MX5S**	310	407	1036	245	326	—	—	—	—	—	—
A 80 3	**S5**	**ME5L**	**MX5L**	310	407	1080	245	342	—	—	—	—	—	—
A 80 4	**S1**	**M1**		138	321	800.5	108	246	861.5	249	103	135	124	108
A 80 4	**S2**	**M2S**		156	330	829.5	119	250	899.5	254	129	146	134	119
A 80 4	**S2**	**ME2S**		156	330	829.5	119	250	—	—	—	—	—	—
A 80 4	**S2**	**MX2S**		156	330	873.5	119	255.1	—	—	—	—	—	—
A 80 4	**S3**	**ME3S**		195	349.5	872.5	142	256.5	—	—	—	—	—	—
A 80 4	**S3**	**MX3S**		195	349.5	904.5	142	259.5	—	—	—	—	—	—
A 80 4	**S3**	**ME3L**		195	349.5	904.5	142	262	—	—	—	—	—	—
A 80 4	**S3**	**MX3L**		195	349.5	948.5	142	268	—	—	—	—	—	—
A 80 4	**S4**	**ME4**	**MX4**	258	381	1012.5	193	296	—	—	—	—	—	—
A 80 4	**S4**	**ME4LB**	**MX4LA**	258	381	1047.5	193	304	—	—	—	—	—	—

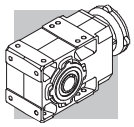

A 80...P(IEC)

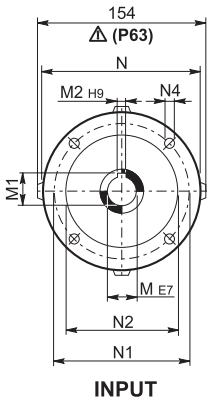

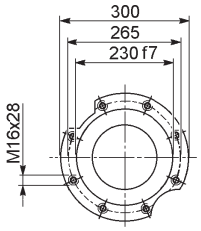

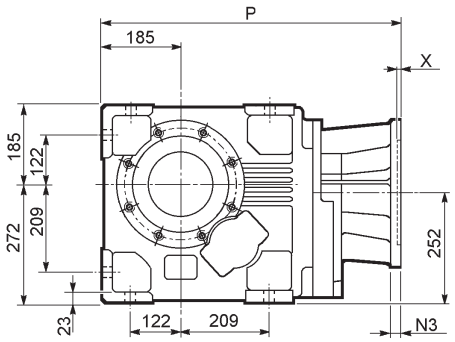

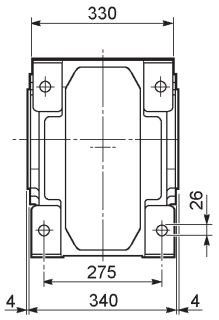

		M	M1	M2	N	N1	N2	N3	N4	X	P	Kg
A 80 3	**P80**	19	21.8	6	200	165	130	—	M10x14.5	4	602	243
A 80 3	**P90**	24	27.3	8	200	165	130	—	M10x14.5	4	602	243
A 80 3	**P100**	28	31.3	8	250	215	180	—	M12x16	4.5	612	245
A 80 3	**P112**	28	31.3	8	250	215	180	—	M12x16	4.5	612	245
A 80 3	**P132**	38	41.3	10	300	265	230	16	14	5	648.5	253
A 80 3	**P160**	42	45.3	12	350	300	250	23	18	6	704	268
A 80 3	**P180**	48	51.8	14	350	300	250	23	18	6	704	268
A 80 3	**P200**	55	59.3	16	400	350	300	—	M16x25	7	729	279
A 80 3	**P225**	60	64.4	18	450	400	350	25	18	6	774.5	298
A 80 4	**P63**	11	12.8	4	140	115	95	—	M8x19	4	645.5	248
A 80 4	**P71**	14	16.3	5	160	130	110	—	M8x16	4.5	645.5	248
A 80 4	**P80**	19	21.8	6	200	165	130	—	M10x14.5	4	665	249
A 80 4	**P90**	24	27.3	8	200	165	130	—	M10x14.5	4	665	249
A 80 4	**P100**	28	31.3	8	250	215	180	—	M12x16	4.5	675	250
A 80 4	**P112**	28	31.3	8	250	215	180	—	M12x16	4.5	675	250
A 80 4	**P132**	38	41.3	10	300	265	230	16	M12x16	5	711.5	259

A 80...HS

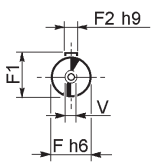

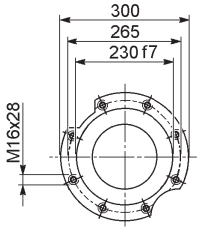

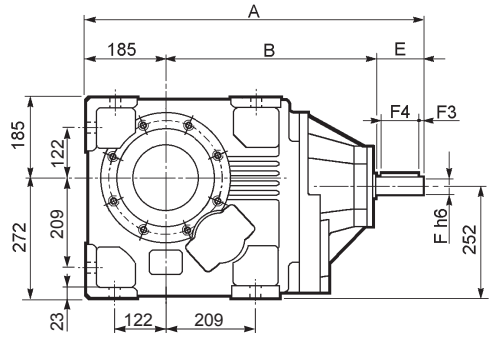

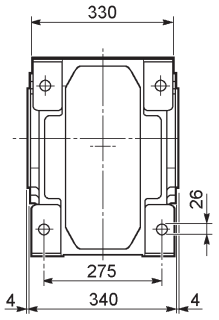

		A	B	E	F	F1	F2	F3	F4	V	Kg
A 80 3	**HS**	786.5	491.5	110	42	45	12	10	90	M12x28	265
A 80 4		735	500	50	24	27	8	2.5	45	M8x19	250

A 80

A 80...UR

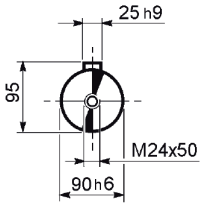

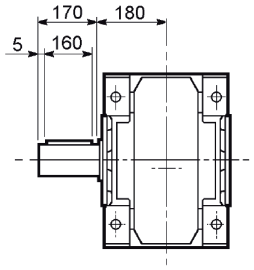

A 80...UD

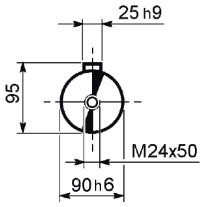

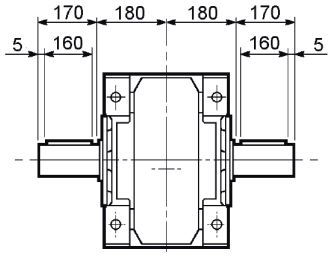

A 80...UH

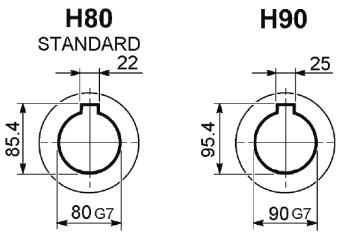

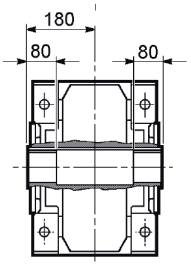

A 80...US

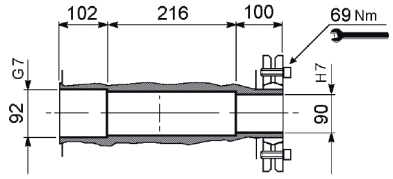

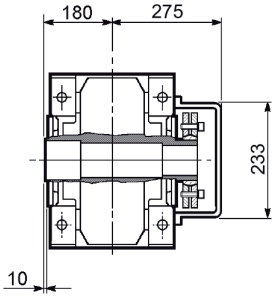

A 80...F...

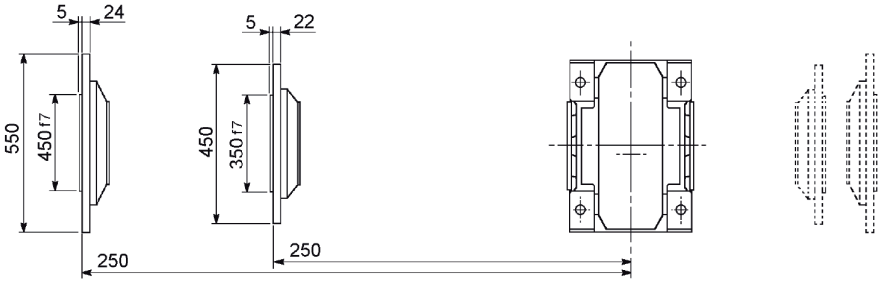

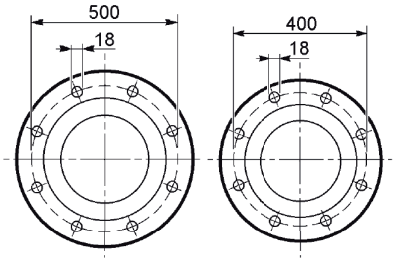

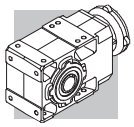

A 90...M/ME/MX

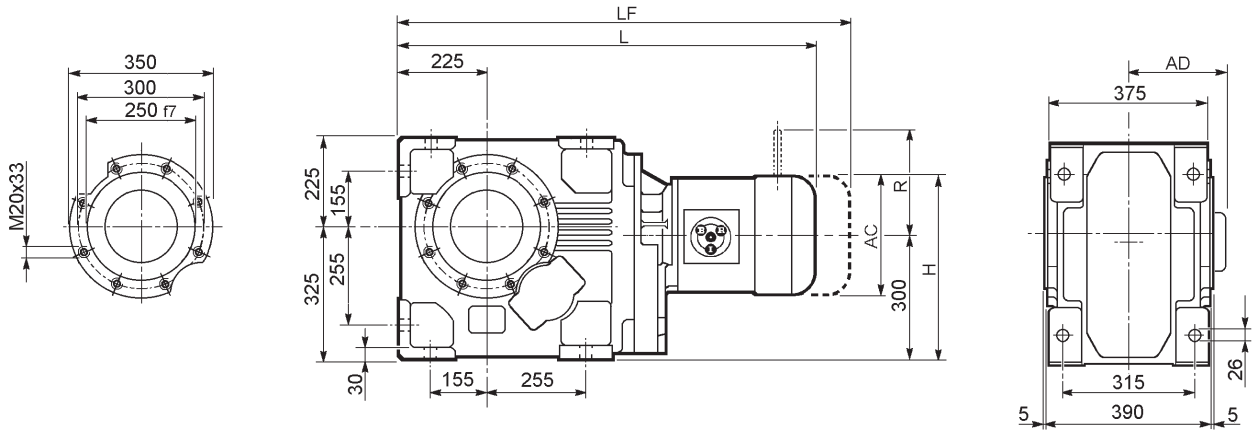

									M...FD M...FA		M...FD		M...FA	
				AC	H	L	AD	Kg	LF	Kg	R	AD	R	AD
A 90 3	**S3**	**ME3S**		195	397.5	930.5	142	414.5	—	—	—	—	—	—
A 90 3	**S3**	**MX3S**		195	397.5	962.5	142	413.5	—	—	—	—	—	—
A 90 3	**S3**	**ME3L**		195	397.5	962.5	142	420	—	—	—	—	—	—
A 90 3	**S3**	**MX3L**		195	397.5	1006.5	142	426	—	—	—	—	—	—
A 90 3	**S4**	**ME4**	**MX4**	258	429	1070.5	193	454	—	—	—	—	—	—
A 90 3	**S4**	**ME4LB**	**MX4LA**	258	429	1105.5	193	462	—	—	—	—	—	—
A 90 3	**S5**	**ME5S**	**MX5S**	310	455	1157	245	482	—	—	—	—	—	—
A 90 3	**S5**	**ME5L**	**MX5L**	310	455	1201	245	498	—	—	—	—	—	—
A 90 4	**S1**	**M1**		138	369	941.5	108	412	1002.5	249	103	135	124	108
A 90 4	**S2**	**M2S**		156	378	970.5	119	422	1040.5	426	129	146	134	119
A 90 4	**S2**	**ME2S**		156	378	970.5	119	422	—	—	—	—	—	—
A 90 4	**S2**	**MX2S**		156	378	1014.5	119	427.1	—	—	—	—	—	—
A 90 4	**S3**	**ME3S**		195	397.5	1013.5	142	428.5	—	—	—	—	—	—
A 90 4	**S3**	**MX3S**		195	397.5	1045.5	142	431.5	—	—	—	—	—	—
A 90 4	**S3**	**ME3L**		195	397.5	1045.5	142	434	—	—	—	—	—	—
A 90 4	**S3**	**MX3L**		195	397.5	1089.5	142	440	—	—	—	—	—	—
A 90 4	**S4**	**ME4**	**MX4**	258	429	1153.5	193	468	—	—	—	—	—	—
A 90 4	**S4**	**ME4LB**	**MX4LA**	258	429	1188.5	193	476	—	—	—	—	—	—

A 90...P (IEC)

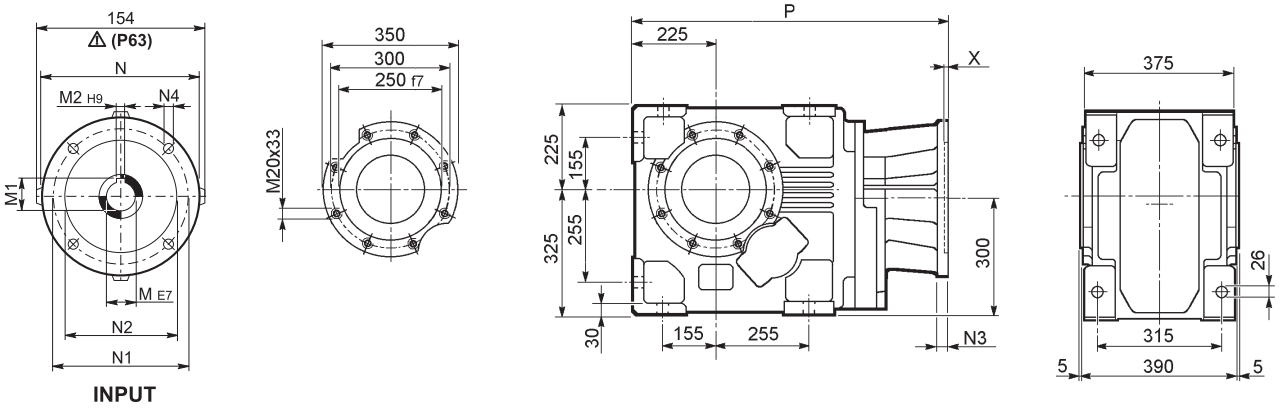

		M	M1	M2	N	N1	N2	N3	N4	X	P	Kg
A 90 3	**P80**	19	21.8	6	200	165	130	—	M10x14.5	4	723	400
A 90 3	**P90**	24	27.3	8	200	165	130	—	M10x14.5	4	723	400
A 90 3	**P100**	28	31.3	8	250	215	180	—	M12x16	4.5	733	401
A 90 3	**P112**	28	31.3	8	250	215	180	—	M12x16	4.5	733	401
A 90 3	**P132**	38	41.3	10	300	265	230	16	14	5	769.5	409
A 90 3	**P160**	42	45.3	12	350	300	250	23	18	6	825	428
A 90 3	**P180**	48	51.8	14	350	300	250	23	18	6	825	429
A 90 3	**P200**	55	59.3	16	400	350	300	—	M16x25	7	850	436
A 90 3	**P225**	60	64.4	18	450	400	350	30	18	6	895.5	472
A 90 3	**P250**	65	69.4	18	550	500	450	30	18	6	925.5	475
A 90 4	**P63**	11	12.8	4	140	115	95	—	M8x19	4	786.5	411
A 90 4	**P71**	14	16.3	5	160	130	110	—	M8x16	4.5	786.5	412
A 90 4	**P80**	19	21.8	6	200	165	130	—	M10x14.5	4	806	413
A 90 4	**P90**	24	27.3	8	200	165	130	—	M10x14.5	4	806	413
A 90 4	**P100**	28	31.3	8	250	215	180	—	M12x16	4.5	816	415
A 90 4	**P112**	28	31.3	8	250	215	180	—	M12x16	4.5	816	415
A 90 4	**P132**	38	41.3	10	300	265	230	16	14	5	852.5	423
A 90 4	**P160**	42	45.3	12	350	300	250	23	18	5.5	903	434
A 90 4	**P180**	48	51.8	14	350	300	250	23	18	5.5	903	434

A 90...HS

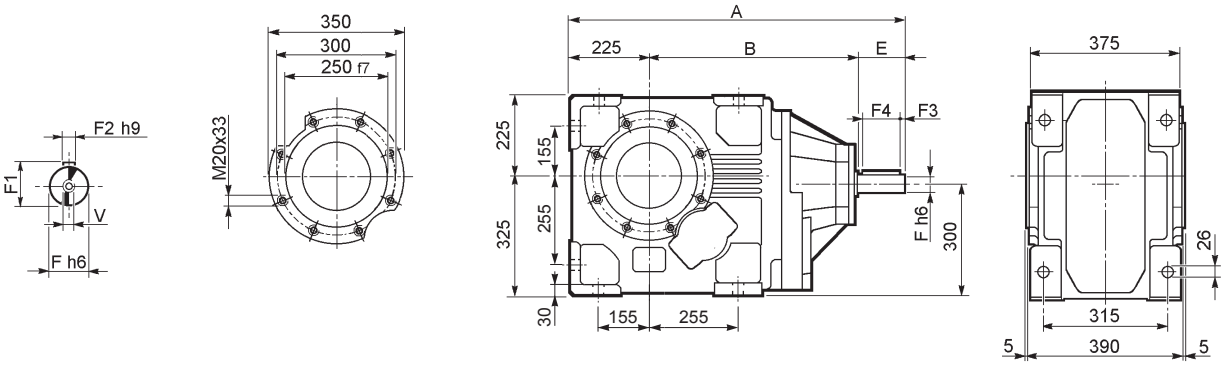

		A	B	E	F	F1	F2	F3	F4	V	Kg
A 90 3	**HS**	1009	644	140	60	64	18	10	120	M16x36	465
A 90 4		875.5	600.5	50	24	27	8	2.5	45	M8x19	415

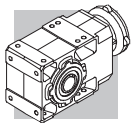

A 90

A 90...UR

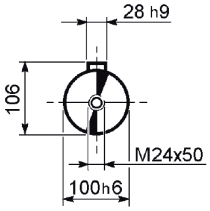

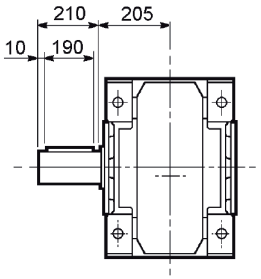

A 90...UD

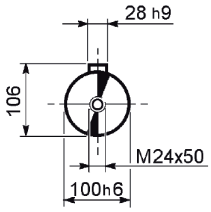

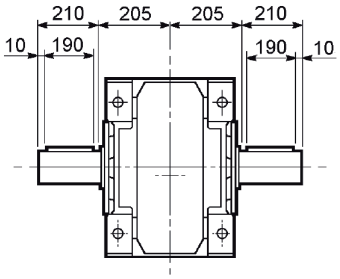

A 90...UH

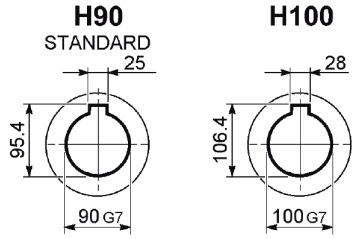

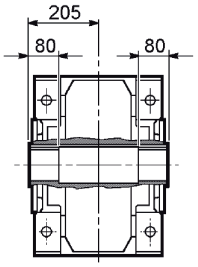

A 90...US

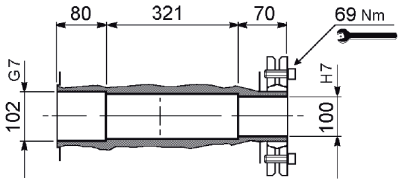

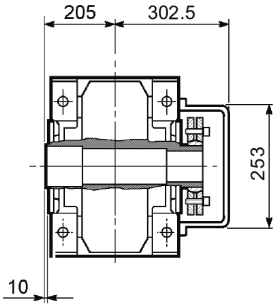

A 90...F...

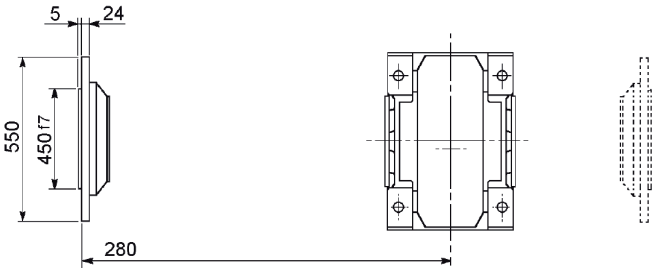

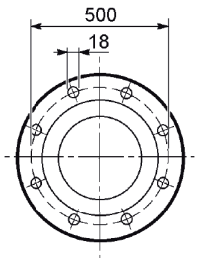

A

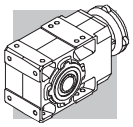

44 附件

44.1 保护罩

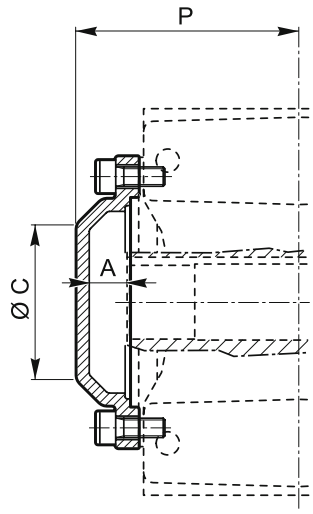

	A	Ø C	P
A 05	17.5	36	73.5
A 10	20.5	60	84.5
A 20	20	75	94
A 30	20	75	104
A 35	19.5	80	114
A 41	21	110	120
A 50	26	100	148.5
A 55	27	100	149
A 60	25	100	158
A 70	33.5	120	193.5
A 80	38	140	228
A 90	43	152	258

44.2 扭力臂

扭力臂附带固定螺栓

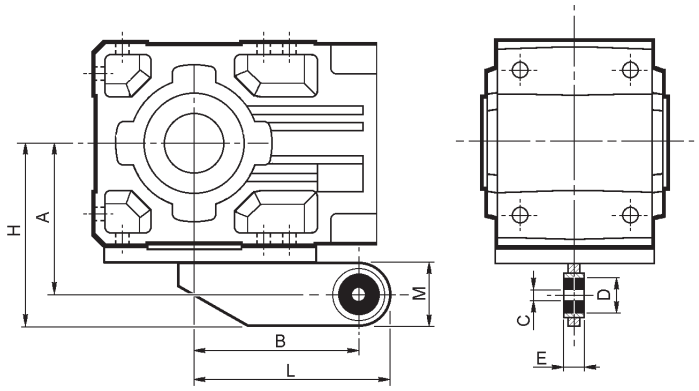

	A	B	C	D	E	H	L	M
A 05	90.5	80	10	30	20	115.5	105	50
A 10	108	118	10	30	20	138	148	60
A 20	118	137	10	30	20	148	167	60
A 30	135	150	20	40	25	170	185	70
A 35	145	165	20	40	25	180	200	70
A 41	157	200	20	40	25	192	235	70
A 50	200	250	32	56	40	245	295	90
A 55	200	250	32	56	40	245	295	90
A 60	225	300	32	56	40	270	345	90

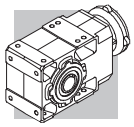

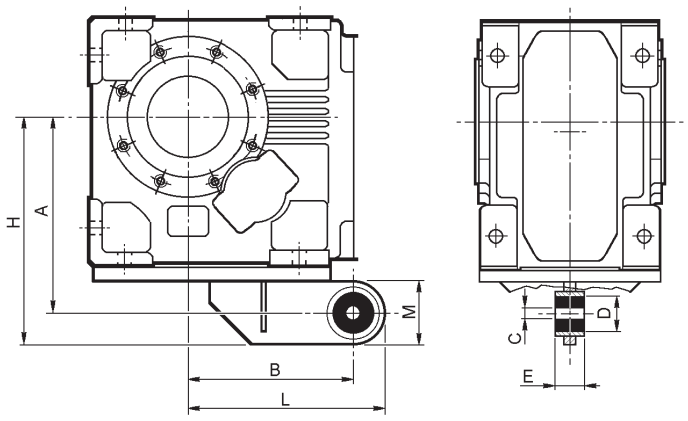

	A	B	C	D	E	H	L	M
A 70	289	250	32	56	40	334	295	90
A 80	357	300	42	78	60	422	365	130
A 90	410	350	42	78	60	475	415	130

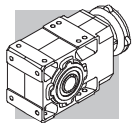

45 与减速机配合的客户轴

为使驱动轴与减速机输出轴配合良好，需符合下表的尺寸要求。

以下所示的结构都可用以传动，但注意根据不同的应用需求，选择对应类型和尺寸的部件。

UH_

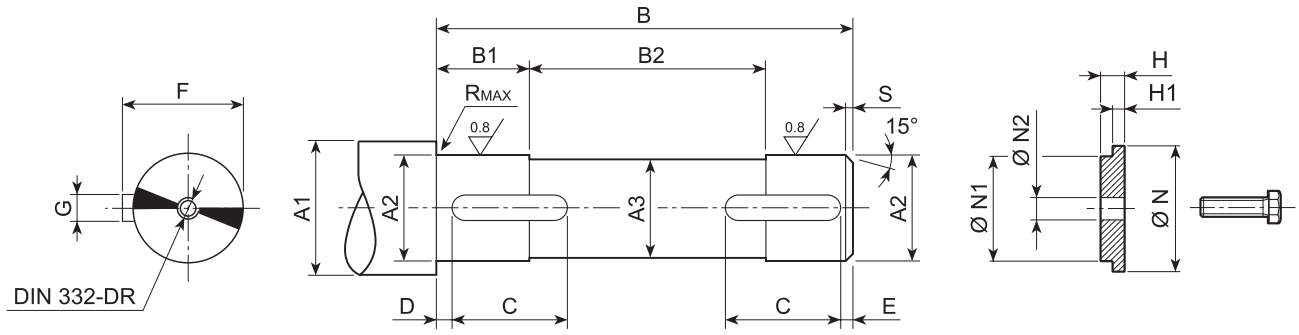

	A1	A2	A3	B	B1	B2	C	D	E	F	G	R	S	UNI 6604	N	N1	N2	H	H1	UNI 5739
A05 UH25	≥ 30	25 h7	24	102	21	62	20	2	2	28	8 h9	0.5	1.5	8x7x20 A	35	25 d9	9	7	5.5	M8x25
A10 UH30	≥ 35	30 h7	29	118	16	87	20	2	2	33	8 h9	0.5	1.5	8x7x20 A	35	30 d9	11	8.5	7	M10x30
A10 UH25	≥ 30	25 h7	24	118	16	87	20	2	2	28	8 h9	0.5	1.5	8x7x20 A	30÷35	25 d9	9	7	5.5	M8x25
A20 UH35	≥ 42	35 h7	34	138	20	98	20	2	2	38	10 h9	0.5	1.5	10x8x20 A	42	35 d9	11	8.5	7	M10x30
A20 UH30	≥ 35	30 h7	29	138	20	98	25	2	2	33	8 h9	0.5	1.5	8x7x25 A	35÷42	30 d9	11	8.5	7	M10x30
A30 UH40	≥ 47	40 h7	39	158	23	112	30	2	2	43	12 h9	0.5	1.5	12x8x30 A	47	40 d9	14	8.5	7	M12x35
A30 UH35	≥ 42	35 h7	34	158	23	112	30	2	2	38	10 h9	0.5	1.5	10x8x30 A	42÷47	35 d9	11	8.5	7	M10x30
A35 UH40	≥ 47	40 h7	39	175	33	109	40	2	2	43	12 h9	1	1.5	12x8x40 A	47	40 d9	14	8.5	7	M12x35
A35 UH35	≥ 42	35 h7	34	175	33	109	40	2	2	38	10 h9	1	1.5	10x8x40 A	42÷47	35 d9	11	8.5	7	M10x30
A41 UH45	≥ 52	45 h7	44	184	28	128	45	2.5	2.5	48.5	14 h9	1	2	14x9x45 A	52	45 d9	14	8.5	7	M12x35
A41 UH40	≥ 47	40 h7	39	184	28	128	50	2.5	2.5	43	12 h9	1	2	12x8x50 A	47÷52	40 d9	14	8.5	7	M12x35
A50 UH55	≥ 63	55 h7	54	226	37.5	151	55	2.5	2.5	59	16 h9	1	2	16x10x55 A	63	55 d9	22	10	8	M20x50
A50 UH50	≥ 57	50 h7	49	226	37.5	151	65	2.5	2.5	53.5	14 h9	1	2	14x9x65 A	57÷63	50 d9	18	10	8	M16x45
A55 UH60	≥ 70	60 h7	59	226	37.5	151	65	2.5	2.5	64	18 h9	2	2	18x11x65 A	70	60 d9	22	10	8	M20x50
A55 UH50	≥ 60	50 h7	49	226	37.5	151	75	2.5	2.5	53.5	14 h9	2	2	14x9x75 A	60÷70	50 d9	18	10	8	M16x45
A60 UH70	≥ 78	70 h7	69	248	48	152	70	2.5	2.5	74.5	20 h9	2.5	2	20x12x70 A	78	70 d9	22	10	8.5	M20x50
A60 UH60	≥ 68	60 h7	59	248	48	152	80	2.5	2.5	64	18 h9	2.5	2	18x11x80 A	68÷78	60 d9	22	10	8.5	M20x50
A70 UH80	v89	80 h7	79	303	58	187	90	3	3	85	22 h9	2.5	2.5	22x14x90 A	89	80 d9	22	10	8.5	M20x50
A70 UH70	≥ 78	70 h7	69	303	58	187	110	3	3	74.5	20 h9	2.5	2.5	20x12x110 A	78÷89	70 d9	22	10	8.5	M20x50
A80 UH90	≥ 99	90 h7	89	358	78	202	120	3	3	95	25 h9	2.5	2.5	25x14x120 A	99	90 d9	26	22	20.5	M24x70
A80 UH80	≥ 89	80 h7	79	358	78	202	130	3	3	85	22 h9	2.5	2.5	22x14x130 A	89÷99	80 d9	22	10	8.5	M20x50
A90 UH100	≥ 111	100 h7	99	408	78	252	160	3	3	106	28 h9	2.5	2.5	28x16x160 A	111	100 d9	26	22	20.5	M24x70
A90 UH90	≥ 99	90 h7	89	408	78	252	190	3	3	95	25 h9	2.5	2.5	25x14x190 A	99÷111	90 d9	26	22	20.5	M24x70

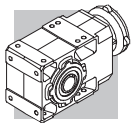

US

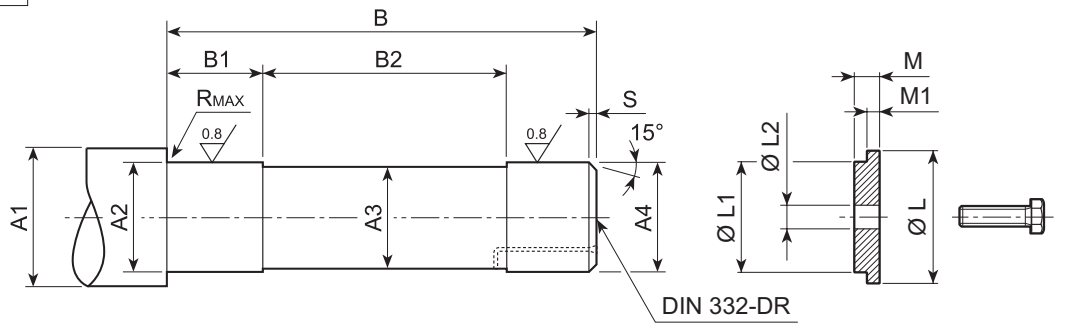

	A1	A2	A3	A4	B	B1	B2	R	S	L	L1	L2	M	M1	UNI 5739
A 05	≥ 35	27 h7	24	25 h6	129.5	32	63.5	0.5	1.5	29.5	25 d9	11	8.5	7	M10x30
A 10	≥ 42	32 h7	29	30 h6	147.5	34	77.5	0.5	1.5	35.5	30 d9	11	8.5	7	M10x30
A 20	≥ 48	37 h7	34	35 h6	170	40	89	0.5	1.5	43	35 d9	14	8.5	7	M12x35
A 30	≥ 54	42 h7	39	40 h6	191.5	48	95.5	0.5	1.5	49	40 d9	18	10	8.5	M16x45
A 35	≥ 54	42 h7	39	40 h6	208.5	48	112.5	0.5	1.5	49	40 d9	18	10	8.5	M16x45
A 41	≥ 60	47 h7	44	45 h6	222	53	117	1	2	54	45 d9	18	10	8.5	M16x45
A 50	≥ 72	57 h7	54	55 g6	264	46	156	1	2	72	55 d9	22	10	8.5	M20x50
A 55	≥ 72	62 h7	59	60 g6	266	46	158	2.5	2	72	60 d9	22	10	8.5	M20x50
A 60	≥ 90	72 h7	69	70 g6	293	48	178	2.5	2.5	85	70 d9	22	10	8.5	M20x50
A 70	≥ 104	82 h7	79	80 g6	352.5	90	172.5	2.5	2.5	95	80 d9	22	10	8.5	M20x50
A 80	≥ 114	92 h7	89	90 g6	416	100	216	2.5	2.5	105	90 d9	26	22	20.5	M24x70
A 90	≥ 126	102 h7	99	100 g6	469	78	321	2.5	2.5	120	100 d9	26	22	20.5	M24x70

UV

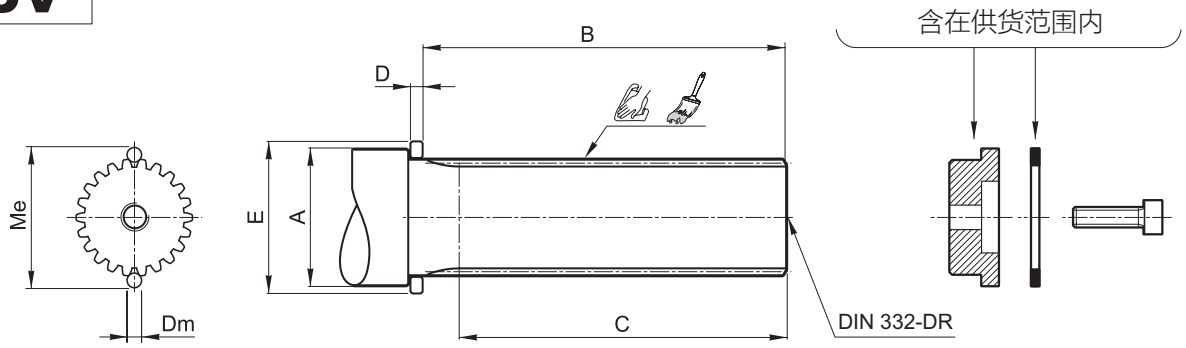

	DIN 5480	Me	Dm	A	B	C	D	E	ISO 4762
A 20	30x1.25x22	33.04 +0/-0.04	2.75	≥ 40	111.5	≥ 95	7	45	M10x35
A 30	35x2x16	38.93 +0/-0.04	4	≥ 45	130.5	≥ 112	7	50	M12x40
A 35	35x2x16	38.93 +0/-0.04	4	≥ 45	147.5	≥ 129	7	50	M12x40
A 41	45x2x21	48.86 +0/-0.04	4	≥ 55	155.5	≥ 136	7	60	M16x45
A 50	50x2x24	54.14 +0/-0.05	4	≥ 60	196	≥ 175	7	65	M16x45
A 55	50x2x24	54.14 +0/-0.05	4	≥ 60	196	≥ 175	7	65	M16x45
A 60	65x2x31	68.97 +0 /-0.05	4	≥ 75	213.5	≥ 191	7	80	M20x55

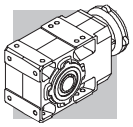

QF

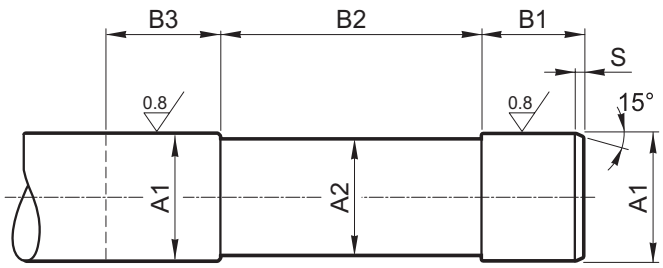

		A1	A2	B1	B2	B3	S
A 10	**QF25**	25 h6	24	41	95	≥ 50	1.5
	QF30	30 h6	29				
A 20	**QF25**	25 h6	24	41	115	≥ 50	1.5
	QF30	30 h6	29				
A 30	**QF35**	35 h6	34	45	130	≥ 54	1.5
	QF40	40 h6	39				
A 35	**QF35**	35 h6	34	45	146.5	≥ 54	1.5
	QF40	40 h6	39				
A 41	**QF40**	40 h6	39	47	151.5	≥ 56	2
	QF45	45 h6	44				
A 50	**QF50**	50 h6	49	48	197	≥ 57	2
	QF55	55 h6	54				
A 55	**QF55**	55 h6	54	50	190	≥ 59	2
	QF60	60 h6	59				
A 60	**QF60**	60 h6	59	57	203	≥ 66	2.5
	QF65	65 h6	64				
	QF70	70 h6	69				

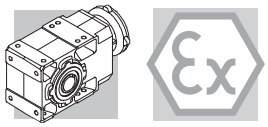

满足ATEX要求的A系列斜齿轮–伞齿轮减速机

46 ATEX规则介绍

46.1 危险环境

2014/34/EU规则对危险环境含义的多种定义:

a. 易燃物质如气体，蒸汽，雾或粉尘;
b. 空气;
c. 在大气环境下;
d. 其中，点火后，燃烧扩散到整个未燃烧混合物（它必须注意的是，有时，主要是与尘埃，可燃材料的不总是全部被燃烧消耗）

一种由于本身和/或操作条件有可能发生爆炸的被称为可能的爆炸性气体环境。

在这样的可能爆炸环境中只有按指令2014/34/EU设计的产品才可用。

46.2 欧盟ATEX标准

指令2014/34/EU规定产品适用于欧盟成员国中使用的爆炸危险区域的最低安全要求。该指令还指定这样的设备类别，这是由指令本身定义。

下表描述了在可能发生爆炸危险环境下的工厂用户，需要划分设备的适用区域。

(C 1)

区域		爆炸性环境的发生频率	危险的状态
气体环境 G	粉尘环境 D		
0	20	一直存在或长时间发生	一直会发生
1	21	容易发生	可能会发生
2	22	不发生或如发生也只是很短的时间	偶然会发生

本样本中所提供的邦飞利减速机适用于区域 1, 21内。

我们也可供适用于区域 2, 22 的减速机。这类减速机请联系我司技术部门。

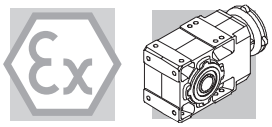

“自2016年4月20日起，ATEX指令第2014/34 / EU条在整个欧盟范围内生效，并取代各国及欧盟现行的关于爆炸性气体的法律规定以及之前的94/9 / EC指令。”

应当强调的是，该指令不仅对电气设备也第一次对机械，液压和气动设备作了规定。

关于机械指令2006/42 / EC，应当注意的是，2014/34/EU是一组专门对可能的爆炸性环境下衍生的危害作了非常具体的规定，而机械指令只是非常普遍的防爆安全要求（附件一）。

因此，对于在可能的爆炸环境下的防护，2014/34/EU的优先级高于机械指令。

机械指令的要求适用于所有其他机械方面的风险应用。

46.3 不同设备防爆等级要求

各种类别的设备必须根据其防爆能力并按制造商的操作规范的要求来操作。

邦飞利可供的产品见灰色高亮显示部分。

(C 2)

防爆要求	分类		防爆型式	工况条件
	组别 I	组别 II		
很高	M1		两次独立的防爆炸能力或满足两次独立的故障发生后安全运行的能力。	设备一直工作即使在危险性环境下
很高		1	两次独立的防爆炸能力或满足两次独立的故障发生后安全运行的能力。	设备工作在区域 0, 1, 2 (气体环境) 和/或区域 20, 21, 22 (粉尘环境).
高	M2		防爆性能满足一般工况和重载应用	在危险性环境下设备的电源是关闭
高		2	防爆性能满足一般工况和频繁故障或设备经常性失灵下的应用	设备工作在区域 1, 2 (气体环境) 和/或区域 21, 22 (粉尘环境).
一般		3	防爆性能满足一般工况应用	设备工作在区域 2 (气体环境) 和/或区域 22 (粉尘环境).

46.4 组别的定义

I组设备适用于地下矿井及地面安装，在容易产生爆炸气体和/或可燃性粉尘的环境中**。**

II组设备适用于其他容易产生爆炸危险的环境。

邦飞利减速机不能安装在分类组别 **I** 和组别 **II**, 类型 1的矿井中。

概括地说，设备对组，类别和区域的分类示于下表中，其中，邦飞利可以提供产品的以灰色突出显示。

(C 3)

组别	**I** **瓦斯，甲烷**		**II** **其他可能的爆炸场所（气体，粉尘）**					
分类	M1	M2	1		2		3	
气态(1)			G	D	G	D	G	D
区域			0	20	1	21	2	22
减速机的防爆等级					c, k	c, k		

(1) **G =** 气体 **D =** 粉尘

本产品样本描述的是邦飞利减速机可用于局限于类别：2，可能的爆炸性环境。

这里介绍的产品符合ATEX 2014/34/EU欧洲指令规定的最低安全要求，这个指令是ATEX指令的一部分。

46.5 CE证书

CE证书是一个证明产品符合2014/34/EU规范的文件。

证书是对用户的一个承诺。安装使用手册中的内容将贯穿产品整个寿命周期中的安全使用。

这些操作手册有多种文字版本，客户可以自行从 www.bonfiglioli.com下载。

有关环境条件的说明是特别重要的，因为若运行时发生故障后就意味着证书没有意义。若对CE证书有疑问，请联系邦飞利技术部门。

47 选型

减速电机和减速机的选型需要一些基本数据，下表简要汇总了这些参数。

对简单的应用，复制这张表，及时填写相关参数并转给我们技术部门，我们会给出最适合你们应用的选型方案。

(C 4)

Bonfiglioli power, control and green solutions			A系列减速机选型所需参数				序号:	
							日期:	
							版本号	日期:
		A)	基本信息					
#	1		公司/客户					
#	2		联系人					
#	3		分公司/分销商					
#	4		订单数量					
	5		交货时间					
		B_1)	电机部分					
	6		电机型号					
#	7	P_{n1}	电机额定功率		[kW]			
#	8	P_{r1}	电机输出轴功率		[kW]			
	9	n_1	输入转速		[min^{-1}]			
	10		极数					
		C)	减速机部分					
#	11		减速机的结构					
#	12	i	速比					
#	13	n_1	输入转速		[min^{-1}]			
#	14	M_{r2}	需用输出转矩		[Nm]			
#	15	f_S	需用服务系数					
	16		输出轴旋向（面向）	**CW**	**CCW**			
#	17	L_{10H}	轴承寿命		[h]			
	18		齿轮寿命		[h]			
	19	SF_{min}	弯曲强度安全系数		参照标准（优选ISO标准）			
	20	SH_{min}	接触强度安全系数		参照标准（优选ISO标准）			
		D)	附加的载荷					
	21	R_{c2}	输出轴的径向载荷		[N]	载荷方向 [°]		
	22	x_2	从轴肩起负载的作用点距离		[mm]			
	23	R_{c1}	输入轴的径向载荷		[N]	载荷方向 [°]		
	24	x_1	从轴肩起负载的作用点距离		[mm]			
	25	A_{n2}	输出轴轴向载荷方向 (+/ -)		[N]	+ = 压力		
	26	A_{n1}	输入轴轴向载荷方向 (+/ -)		[N]	− = 拉力		
		E)	应用					
#	27		应用类型					
	28		工作制	时间阶段	减速机输出转矩	减速机输出转速		
				%	[Nm]	[min^{-1}]		
				,,,,	,,,,			
				,,,,	,,,,			
				,,,,	,,,,			
	29		工作制的说明：					
	30		FEM等级的参数	T-	L-	M-		
	31		间隔等级		[%]			
	32	T_a	环境温度范围		[°C]			
#	33		海拔高度		[m]			
	34		环境	室内小空间	室内大空间	室外		
		F)	注意					
	35		说明和附件的客户要求					
# 选型的强制性								

48 安装、使用和维护

所有产品的安装使用维护说明详见随机的手册。
用户也可以从邦飞利官网（www.bonfiglioli.com）下载多种文字的PDF格式的安装使用维护说明书。
请妥善保存这些资料，以便相关人员在安装时或在日常维护保养中用作参考。

49 减速机满足ATEX要求的说明

- 带可供定期检查油位的透明油位塞。
- 带单向阀的透气塞。
- 根据订单中的安装位置，工厂负责加润滑油（合成油）。

- 采用VITON油封。
- 没有塑料零部件..
- 铭牌上标明产品的类型和防爆类型。
- 所有零部件在工作温度以上可正常工作。
- 每台减速机上均装有温度检测仪。

(C 5)

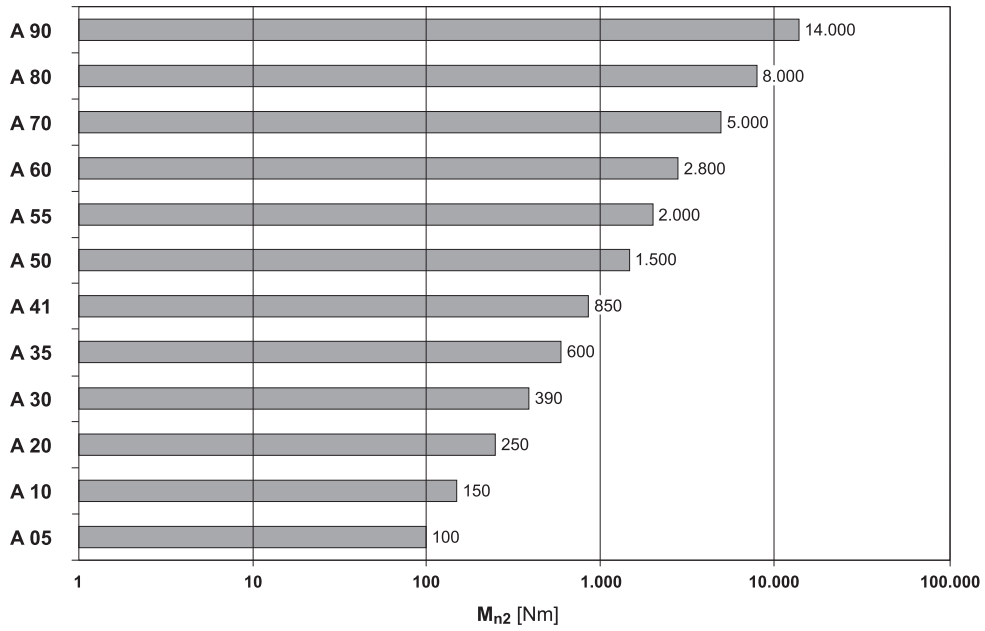

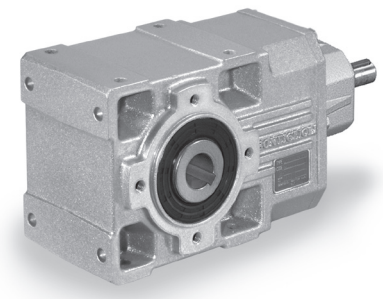

50 输出结构

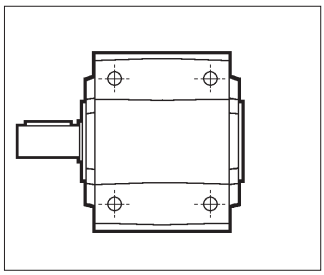

UR

单加长轴输出

A 10 ... A 90

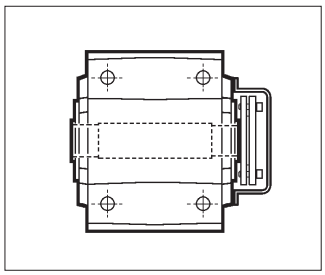

US

带锁紧盘的空心轴输出

A 05 ... A 90

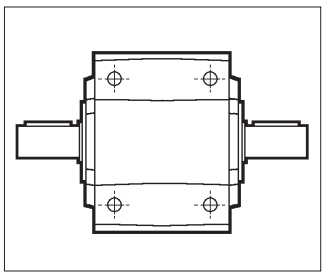

UD

双加长轴输出

A 10 ... A 90

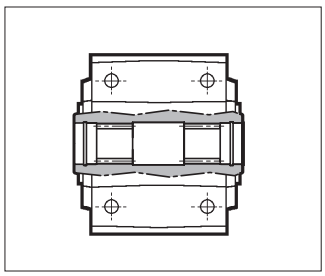

UV

花键空心轴
（DIN5840）输出

A 20 ... A 60

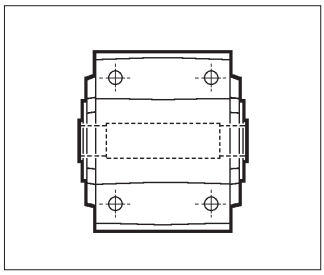

UH

带键槽的空心轴输出

A 05 ... A 90

输出法兰基本结构

下面简图说明基本输出结构及位置 ① 或 ② 适用的法兰。

UR F1... **UR F2...**

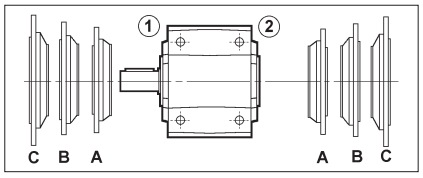

UD F1... **UD F2...**

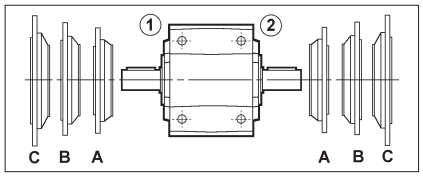

UH... F1... **UH... F2...**

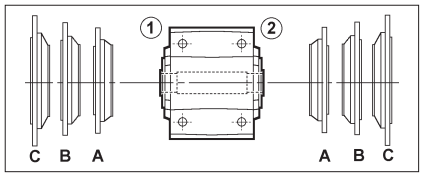

US F1... **US F2...**

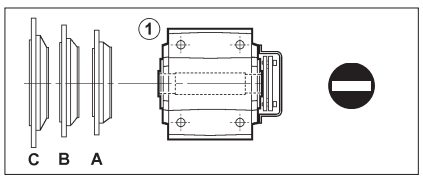

UV F1... **UV F2...**

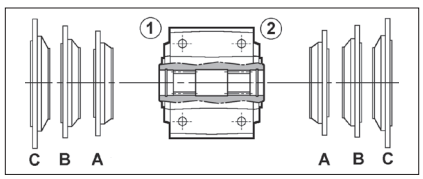

51 型号说明

减速机

A 50 3 UH50 F1A 99.5 S3 HS EX

选项

安装位置
B3 (标准), B6, B7, B8, VA, VB

输入结构

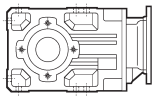
IEC_ P63 ... P250
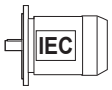

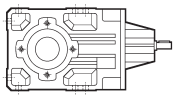
HS

速比

输出法兰尺寸和位置（需要时指定）
F = 法兰输出
1,2 = 法兰位置
A,B,C = 法兰尺寸

输出结构

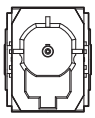
UH_

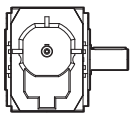
UR
(A 10...A 90)

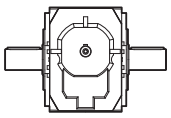
UD
(A 10...A 90)

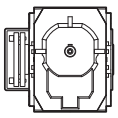
US
(A 05...A 90)

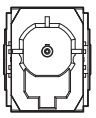
UV
(A 20...A 60)

A 05	A 10	A 20	A 30	A 35	A 41	A 50	A 55	A 60	A 70	A 80	A 90
UH25	**UH25**	**UH30**	**UH35**	**UH40**	**UH45**	**UH50**	**UH60**	**UH60**	**UH70**	**UH80**	**UH90**
—	UH30	UH35	UH40	UH35	UH40	UH55	UH50	UH70	UH80	UH90	UH100

传动级数
2 (A 05...A 60), **3** (A 20...A 90), **4** (A 50...A 90)

减速机机座号
05, 10, 20, 30, 35, 41, 50, 55, 60, 70, 80, 90

减速机型号: **A** = 斜齿轮–伞齿轮减速机

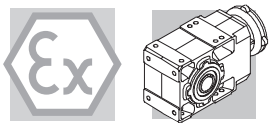

减速机选项

EX

减速机可以安装在区域 1 和 21 (分类 2G 和 3G)。
温度等级是T4 (最大表面温度 135 ° C).

证书

AC – 生产合格证

该证书证明产品与采购订单一致，产品生产符合邦飞利质量体系标准。

CC – 检验合格证

该文件要求检查订单一致性，目测检查外观情况和外形尺寸。检测空载情况下的主要性能参数，以及静态和动态下的气密性，在每批减速机中作抽样检查并作特殊标记。

52 减速机和减速电机的其他信息

A-EX (Atex) 系列的安装位置，技术参数，可配的电机，转到惯量和外形尺寸与A系列是相同的。所有这些信息可以从其样本的相应章节中获得。

53 设计特点

主要设计特点如下：
- 模块化
- 结构紧凑
- 安装方式多样
- 效率高
- 低噪音
- 表面渗碳硬化处理齿轮
- 10,20,25机座采用铝制箱体，更大的机座采用高强度的铸铁箱体
- 输入和输出轴由优质钢制成

(D 44)

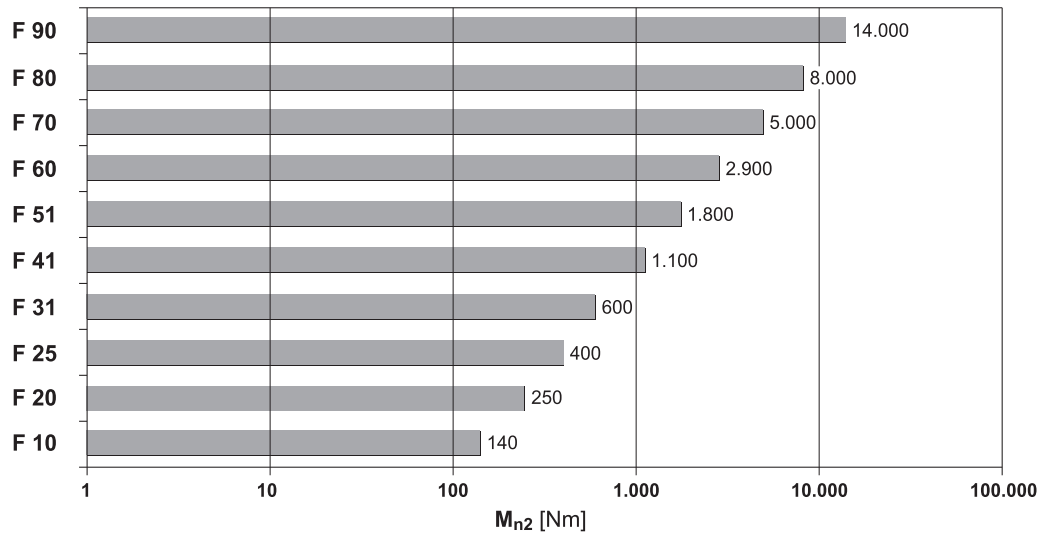

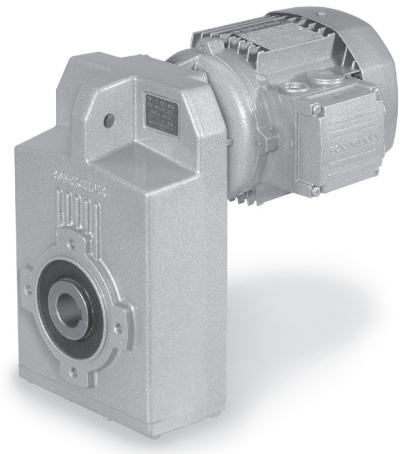

54 输出结构形式

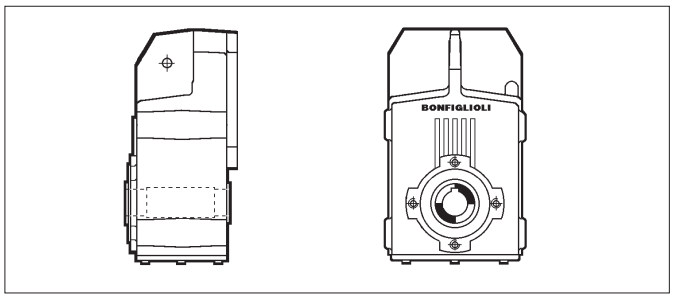

H

带键槽的空心轴输出

F 10 ... F 90

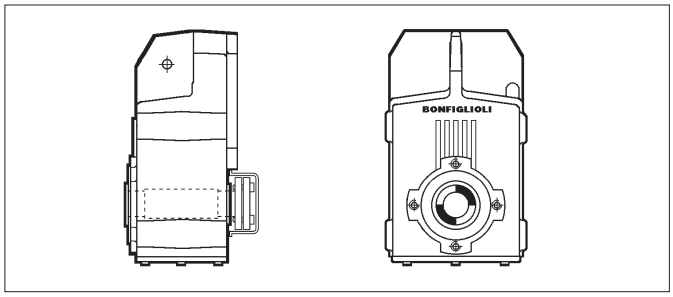

S

带锁紧盘的空心轴输出

F 10 ... F 90

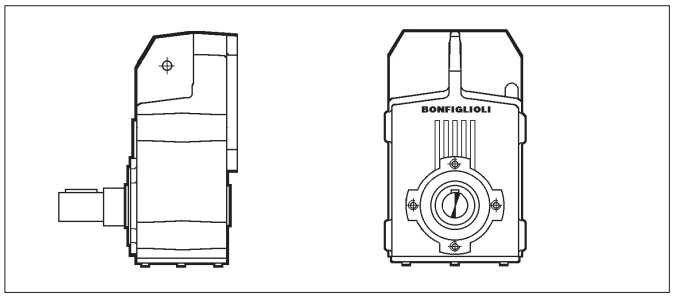

R

实心轴输出

F 10 ... F 90

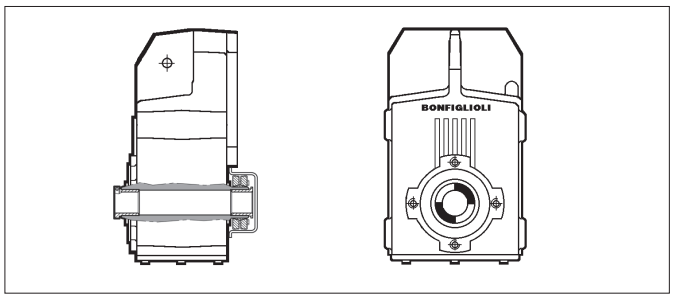

QF

(能快捷组装的结构 **)**

带衬套接头和锁紧盘的空心轴输出

F 10 ... F 60

$M_{n2\ max}$ [Nm]	
F 25 QF30	350
F 41 QF42	850
F 41 QF45	1000
F 51 QF50	1750

输出法兰基本结构

下面简图说明法兰的基本输出结构。

H... F...

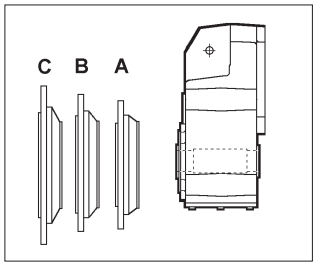

S F...

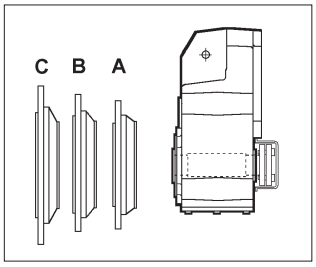

R F...

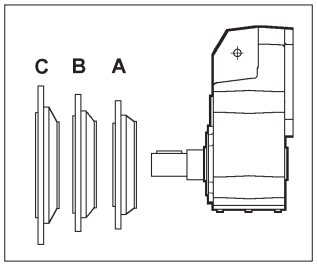

QF...

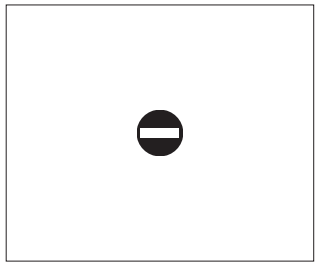

55 命名

减速机

F 10 2 H30 FA 9.8 S2 H5 .....

选项

安装位置
H1 (默认), **H2**, **H3**, **H4**, **H5**, **H6**

输入结构

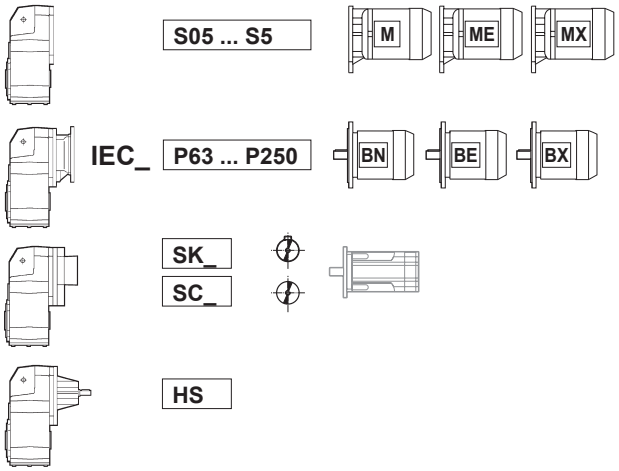

速比

输出法兰尺寸和位置（需要时指定）
F = 法兰输出方式
A,B,C = 法兰尺寸

减速机结构形式

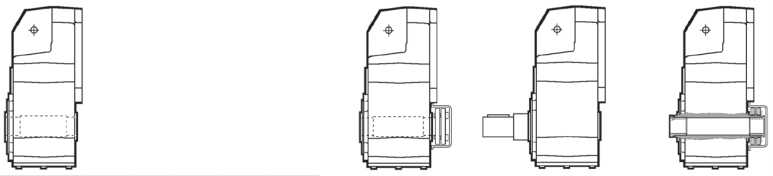

H										
	F 10	F 20	F 25	F 31	F 41	F 51	F 60	F 70	F 80	F 90
Standard	**H25**	**H30**	**H35**	**H35**	**H40**	**H50**	**H60**	**H80**	**H90**	**H100**
Alternative	H30	H35	H40	H40	H45	H55	H70	H70	H80	H90

S (F 10...F 90)　**R** (F 10...F 90)　**QF** (F 10...F 60)

← 可选轴经根据要求提供

传动级数
2 (F 10...F 51), **3** (F 20...F 90), **4** (F 31...F 90)

减速机机座号
10, 20, 25, 31, 41, 51, 60, 70, 80, 90

型号　**F** = 平行轴斜齿轮减速机

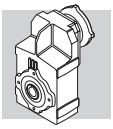

电机 制动器

M 1LA 4 230/400-50 IP54 CLF ..... **W FD** 7.5 R SB 220 SA .....

选项

制动电压

整流器型号
NB, SB, NBR, SBR

制动器手动释放手柄
R, RM

制动转矩

制动器类型
FD (直流制动器)
FA (交流制动器)

电机接线盒位置
W (默认), **N, E, S**

电机与减速机连接方式
— (紧凑型电机)
B5 (IEC电机)

绝缘等级
CL F 标准
CL H 可选

防护等级
IP55 标准 (**IP54** – 制动电机)

电压 – 频率

电机极数
2, 4, 6, 2/4, 2/6, 2/8, 2/12, 4/6, 4/8

电机机座号
0B – 5LA (紧凑型电机)
63A – 280M (IEC 电机)

电机型号
MX = 紧凑型高效三相电机(IE3)
BX = IEC 高效三相电机(IE3)
ME = 紧凑型高效三相电机(IE2)
BE = IEC 高效三相电机(IE2)
M = 紧凑型三相电机
BN = IEC 三相电机

55.1 减速机选项

AL，AR

订购时，根据客户要求提供逆止器，保证输出轴单向旋转。
下表中的减速机可以安装逆止器。

(D 45)

F 31 2*	**F 41 2** ⛔ (6.7; 10.8)					
F 31 3*	**F 41 3**	**F 51 3**	**F 60 3**	**F 70 3**	**F 80 3**	**F 90 3**
		F 51 4	**F 60 4**	**F 70 4**	**F 80 4**	**F 90 4**

伺服电机接口S_60A, S_ 60B, S_80A不能配逆止器。

订购减速机时，应通过选项AR或AL指定输出轴旋转方向(表D46)。

注意：如果逆止器工作过于频繁，应保证反转扭矩小于减速机额定扭矩M_{n2}的70%。

(D 46)

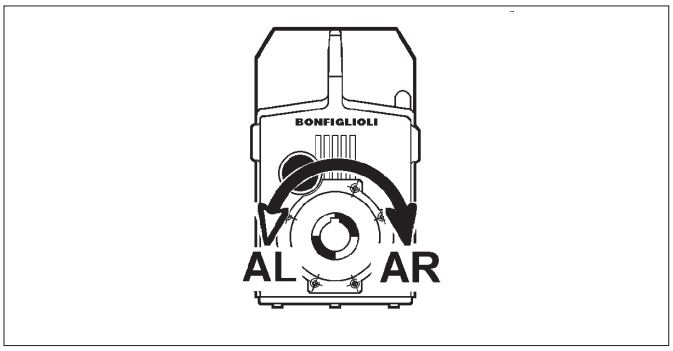

SO

对于机座F10 – F41的减速机（通常出厂时已加油），这个选项表示供货时不加油。

LO

对于机座F51 – F90减速机（通常出厂时不加油），这个选项表示供货时根据安装位置，加邦飞利使用的合成油。

DV

输入轴采用双油封（仅对一体化减速电机适用）。

VV

输入轴采用氟橡胶材质的油封。

PV
输入输出轴都采用氟橡胶材质的油封。

FL
减速机F 10...F 41可以选择FL选项（侧面加工并钻有螺纹孔）。
与FL选项相关的安装尺寸参见下表。
F 51 – F 90减速机，FL作为标准选项。

(D 47)

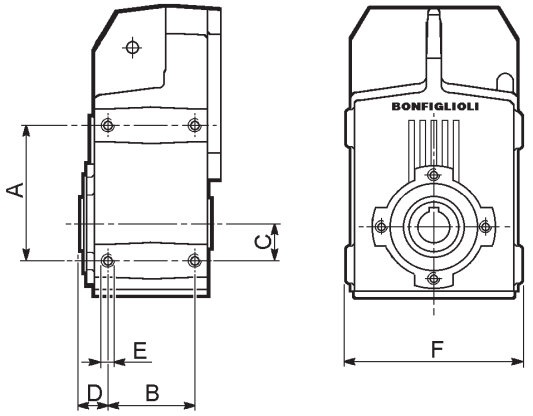

	A	B	C	D	E	F
F 10	115	60	35	21.25	M8x16	163
F 20	130	70	40	26.5	M10x20	181
F 25	130	70	40	27.5	M10x20	181
F 31	147	80	45	30	M12x20	203
F 41	190	95	60	32.5	M12x22	235

表面保护

如果没有特别的防护等级要求，减速机表面的耐腐蚀等级至少达到C2 (UNI EN ISO 12944-2)，如果要求更高，可以提供C3和C4等级。

(D 48)

表面保护	典型环境	最高表面温度.	按UNI EN ISO 12944-2对腐蚀进行分类
C3	城市和工业环境，相对湿度高达100%的（中等空气污染）	120°C	C3
C4	工业区、沿海地区、化工厂，相对湿度高达100%的（重度空气污染）	120°C	C4

C3或C4保护等级的减速机颜色有多种选择。如果没有特定的要求（见“喷漆”选项），默认颜色为RAL 7042。
另外也可以提供C5等级（UNI EN ISO 12944-2）。详细情况请联系我们的技术服务部门。

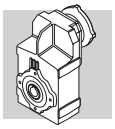

喷漆

下表为减速机表面保护等级为C3或C4时可选用的颜色。

(D 49)

油漆	颜色	RAL 号码
RAL7042*	交通灰A	7042
RAL5010	龙胆蓝	5010
RAL9005	乌黑	9005
RAL9006	铝白色	9006
RAL9010	纯白色	9010

* 如没指定颜色，减速机按标准颜色供货。

说明– “喷漆”选项只能和“表面保护”选项结合选择。

认证

AC – 符合性证明
此文件证明产品符合采购订单以及邦飞利质量体系的适用程序。

CC – 检查证明
此文件要求检查订单的合规性，产品外观和配合尺寸；
以及无负载情况下主要的功能性参数，和在静态和动态时油封的密封性。
被检查的产品取样于同一海运批次并单独做好标记。

55.2 附件

请查看样本的65章。

55.3 电机选项

AL, AR

电机部分的逆止器参见本样本中电机章节，并且应用于一体式M,ME电机或MX。
下表为基于不同选项对应的减速机可转动方向。

(D 50)

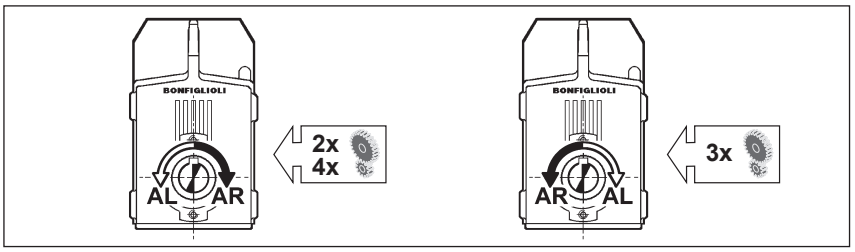

更多信息请咨询邦飞利电机部门。

56 安装位置和接线盒位置

从风扇端看电机可以确定电机接线盒的位置；标准位置以黑字表示 (W)。

制动器手动释放杆的角度位置

除非另有说明，否则制动电机的手动释放装置位于接线盒90°位置。
不同角度可以通过相应的选项来指定。

(D 51)

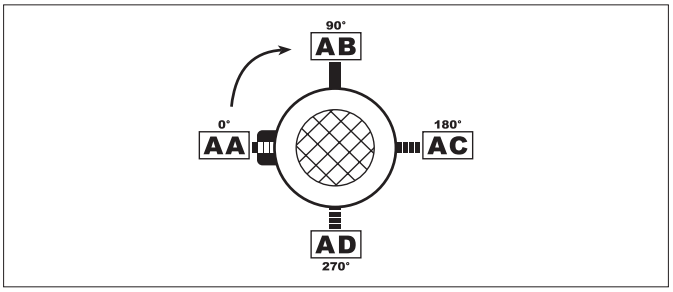

F ...

H1

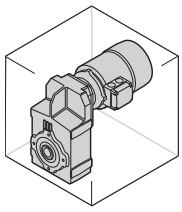
_S

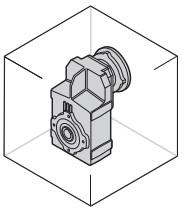
_P(IEC) _SK / _SC

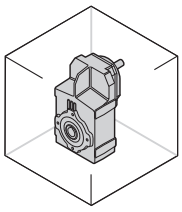
_HS

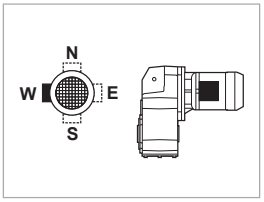

H2

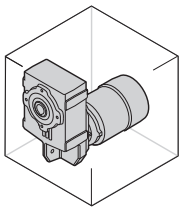
_S

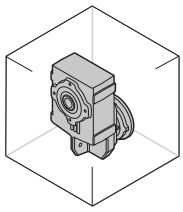
_P(IEC) _SK / _SC

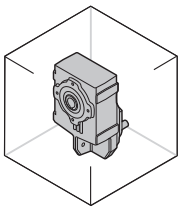
_HS

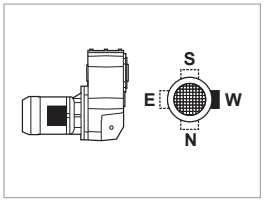

H3

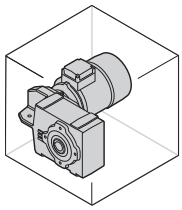
_S

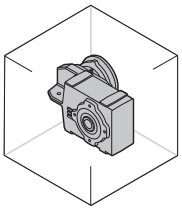
_P(IEC) _SK / _SC

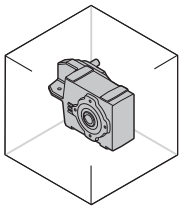
_HS

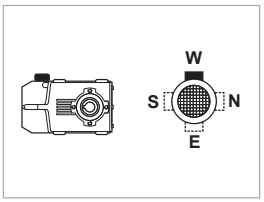

H4

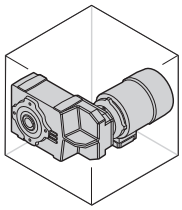
_S

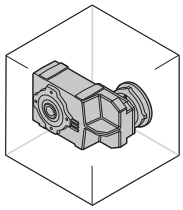
_P(IEC) _SK / _SC

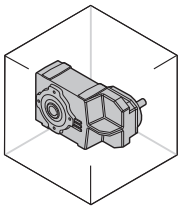
_HS

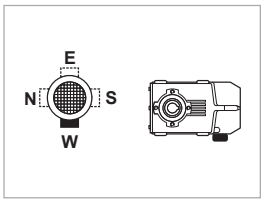

H5

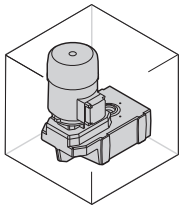
_S

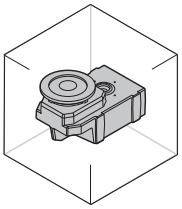
_P(IEC) _SK / _SC

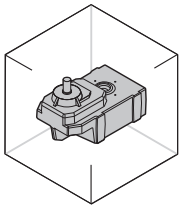
_HS

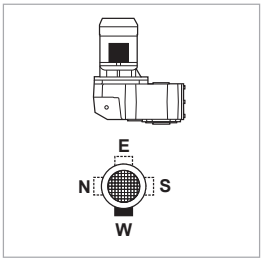

H6

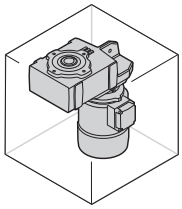
_S

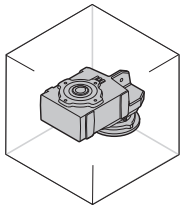
_P(IEC) _SK / _SC

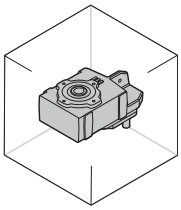
_HS

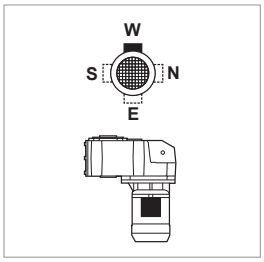

W = Default

57 悬臂载荷

作用于输入轴/输出轴上的扭矩将在相应的轴上产生径向力。轴的合成力必须与轴承和轴的许用载荷相一致。也就是说轴所受的力（R_{c1}为输入轴，R_{c2}为输出轴）必须小于或等于许用的悬臂载荷（R_{n1}为输入轴，R_{n2}为输出轴）。许用悬臂载荷在减速机选型表列出。
下面给出的公式中，下标1指输入轴，下标2指输出轴。外部传动产生的载荷可以通过下面的公式近似求出：

$$R_{c1}\,[N] = \frac{2000 \cdot M_1\,[Nm] \cdot K_r}{d\,[mm]} \quad ; \quad R_{c2}\,[N] = \frac{2000 \cdot M_2\,[Nm] \cdot K_r}{d\,[mm]} \qquad (35)$$

(D 52)

M_1 [Nm]	输入轴所受的转矩
M_2 [Nm]	输出轴所受的转矩
d [mm]	连接到轴上部件的节径
K_r = 1	链条传动

K_r = 1,25	齿轮传动
K_r = 1,5	三角皮带传动
K_r = 2,0	平皮带传动

悬臂载荷的校核根据作用在轴中点或远端而不同：

(D 53)

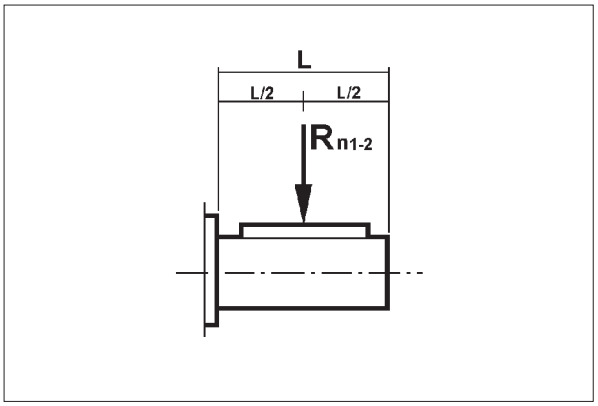

(D 54)

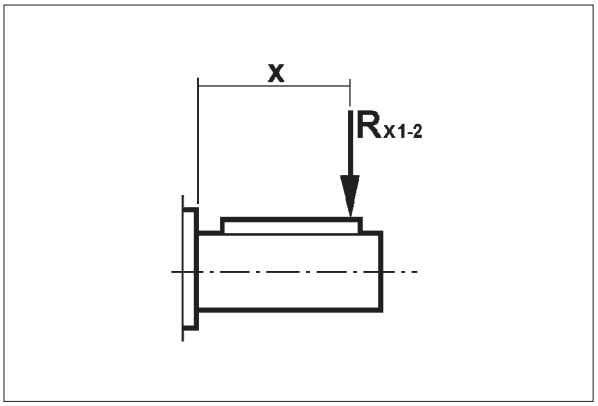

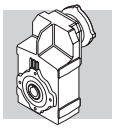

a)径向力作用在轴中点，表(D53)

轴的径向力与样本的许用悬臂载荷比较应该用以下条件校核：
Rc1≤ Rn1 [输入轴]

或

Rc2≤ Rn2 [输出轴]

b) 径向力不作用在轴中点，表(D54)

当载荷作用在距轴肩“x”的地方，许用载荷必须针对这个位置计算。
修正的许用悬臂载荷Rx1（输入）和Rx2（输出）可分别通过原始额定值Rn1和Rn2与如下系数计算出来：

$$\frac{a}{b+x} \qquad (36)$$

(D 55)

	负载位置系数					
	输出轴			输入轴		
	a	**b**	**c**	**a**	**b**	**c**
F 10 2	123	100.5	450	21	1	300
F 20 2	145	115	600	40	20	350
F 20 3	145	115	600	21	1	300
F 25 2 - F 25 3	157.5	127.5	800	40	20	350
F 25 4	157.5	127.5	800	21	1	300
F 31 2 - F 31 3	165	135	850	38.5	18.5	350
F 31 4	165	135	850	21	1	300
F 41 2 - F 41 3	191.5	151.5	1000	49.5	24.5	450
F 41 4	191.5	151.5	1000	40	20	350
F 51 2 - F 51 3	233.5	183.5	1300	49.5	24.5	450
F 51 4	233.5	183.5	1300	38.5	18.5	350
F 60 3	258.5	198.5	1100	55.5	25.5	600
F 60 4	258.5	198.5	1100	49.5	24.5	450
F 70 3	342	277	1600	86	31	1000
F 70 4	342	277	1600	49.5	24.5	450
F 80 3	386.5	301.5	1800	86	31	1000
F 80 4	386.5	301.5	1800	49.5	24.5	450
F 90 3	458.5	353.5	2400	116	46	1400
F 90 4	458.5	353.5	2400	49.5	24.5	450

校核程序如下：

输入轴

计算：

$$R_{x1} = R_{n1} \cdot \frac{a}{b + x} \quad (37)$$

X需要满足的条件：

$$\frac{L}{2} \leq x \leq c \quad (38)$$

最后必须校核下列条件：

$$R_{c1} \leq R_{x1} \quad (39)$$

输出轴

计算：

$$R_{x2} = R_{n2} \cdot \frac{a}{b + x} \quad (40)$$

X需要满足的条件：

$$\frac{L}{2} \leq x \leq c \quad (41)$$

最后必须校核下列条件：

$$R_{c2} \leq R_{x2} \quad (42)$$

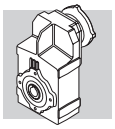

58 轴向载荷A_{n1}, A_{n2}

输入输出轴许用轴向载荷A_{n1}和A_{n2}可分别由输入输出径向载荷R_{n1}和R_{n2}，通过以下公式计算得出：

$$A_{n1} = R_{n1} \cdot 0.2$$
$$A_{n2} = R_{n2} \cdot 0.2 \quad (43)$$

以上公式也适用轴向径向载荷同时作用的情况。仅当没有悬臂载荷作用时，许用轴向载荷A_n等于额定悬臂载荷R_n的50%。
如果轴向载荷超过许用值或大于径向载荷，请联系邦飞利连通力对具体应用进行深入分析。

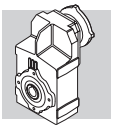

59 减速电机选型表

不带制动器的电机选型时需要考虑 EC 640/2009标准 (见本样本的M章节)，当电机额定功率小于0.75KW时，BN/M电机都可选。
考虑到EC 640/2009标准并不适用带制动器的电机，所以制动电机只有BN/M电机可选，不包括BX, BE, MX和ME电机。

0.09 kW

n_2 min-1	M_2 Nm	S	i	R_{n2} N	IE1		IEC IE1	
0.40	1945	2.6	2188	35000			**F704_2188 P63 BN63A6**	435
0.50	1526	3.4	1717	35000			**F704_1717 P63 BN63A6**	435
0.62	1254	0.9	1411	8500	**F414_1411 S05 M05A6**	422	**F414_1411 P63 BN63A6**	423
0.73	1079	1.0	1213	8500	**F414_1213 S05 M05A6**	422	**F414_1213 P63 BN63A6**	423
0.81	971	1.1	1092	8500	**F414_1092 S05 M05A6**	422	**F414_1092 P63 BN63A6**	423
0.90	874	1.3	982.4	8500	**F414_982.4 S05 M05A6**	422	**F414_982.4 P63 BN63A6**	423
0.98	801	1.4	900.5	8500	**F414_900.5 S05 M05A6**	422	**F414_900.5 P63 BN63A6**	423
1.1	724	1.5	813.8	8500	**F414_813.8 S05 M05A6**	422	**F414_813.8 P63 BN63A6**	423
1.2	678	0.9	762.3	6500	**F314_762.3 S05 M05A6**	418	**F314_762.3 P63 BN63A6**	419
1.2	658	1.7	739.4	8500	**F414_739.4 S05 M05A6**	422	**F414_739.4 P63 BN63A6**	423
1.3	610	1.0	685.6	6500	**F314_685.6 S05 M05A6**	418	**F314_685.6 P63 BN63A6**	419
1.3	614	1.8	690.1	8500	**F414_690.1 S05 M05A6**	422	**F414_690.1 P63 BN63A6**	423
1.4	551	1.1	619.9	6500	**F314_619.9 S05 M05A6**	418	**F314_619.9 P63 BN63A6**	419
1.5	515	1.2	578.6	6500	**F314_578.6 S05 M05A6**	418	**F314_578.6 P63 BN63A6**	419
1.6	489	2.2	549.8	8500	**F414_549.8 S05 M05A6**	422	**F414_549.8 P63 BN63A6**	423
1.7	469	0.9	527.3	6500	**F254_527.3 S05 M05A6**	414	**F254_527.3 P63 BN63A6**	415
1.7	469	1.3	527.8	6500	**F314_527.8 S05 M05A6**	418	**F314_527.8 P63 BN63A6**	419
1.9	414	1.0	466.0	6500	**F254_466.0 S05 M05A6**	414	**F254_466.0 P63 BN63A6**	415
1.9	411	1.5	462.6	6500	**F314_462.6 S05 M05A6**	418	**F314_462.6 P63 BN63A6**	419
2.0	387	1.0	434.9	6500	**F254_434.9 S05 M05A6**	414	**F254_434.9 P63 BN63A6**	415
2.0	386	2.9	433.7	8500	**F414_433.7 S05 M05A6**	422	**F414_433.7 P63 BN63A6**	423
2.1	372	1.6	418.9	6500	**F314_418.9 S05 M05A6**	418	**F314_418.9 P63 BN63A6**	419
2.2	350	1.1	393.9	6500	**F254_393.9 S05 M05A6**	414	**F254_393.9 P63 BN63A6**	415
2.4	340	1.8	374.4	6500			**F313_374.4 P63 BN63A6**	419
2.6	302	2.0	332.8	6500			**F313_332.8 P63 BN63A6**	419
2.6	313	3.5	344.8	8500			**F413_344.8 P63 BN63A6**	423
2.8	288	0.9	316.9	4000	**F203_316.9 S05 M05A6**	410	**F203_316.9 P63 BN63A6**	411
3.0	267	2.2	293.8	6500			**F313_293.8 P63 BN63A6**	419
3.1	259	1.0	285.2	4000	**F203_285.2 S05 M05A6**	410	**F203_285.2 P63 BN63A6**	411
3.4	232	1.1	255.3	4000	**F203_255.3 S05 M05A6**	410	**F203_255.3 P63 BN63A6**	411
3.5	230	2.6	253.6	6500			**F313_253.6 P63 BN63A6**	419
3.9	207	2.9	228.2	6500			**F313_228.2 P63 BN63A6**	419
4.2	190	1.3	209.3	4000	**F203_209.3 S05 M05A6**	410	**F203_209.3 P63 BN63A6**	411
4.4	184	3.3	202.3	6500			**F313_202.3 P63 BN63A6**	419
4.8	168	1.5	184.9	4000	**F203_184.9 S05 M05A6**	410	**F203_184.9 P63 BN63A6**	411
5.1	157	1.6	172.6	4000	**F203_172.6 S05 M05A6**	410	**F203_172.6 P63 BN63A6**	411
5.6	142	1.8	156.3	4000	**F203_156.3 S05 M05A6**	410	**F203_156.3 P63 BN63A6**	411
6.7	123	2.0	132.2	4000	**F202_132.2 S05 M05A6**	410	**F202_132.2 P63 BN63A6**	411
6.9	118	1.2	127.1	2800	**F102_127.1 S05 M05A6**	406	**F102_127.1 P63 BN63A6**	407

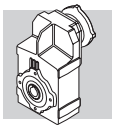

0.09 kW

n_2 min-1	M_2 Nm	S	i	R_{n2} N	IE1		IEC IE1	
7.7	106	2.4	114.3	4000	**F202_114.3 S05 M05A6**	410	**F202_114.3 P63 BN63A6**	411
8.3	98	1.4	106.0	2800	**F102_106.0 S05 M05A6**	406	**F102_106.0 P63 BN63A6**	407
8.7	94	2.6	101.6	4000	**F202_101.6 S05 M05A6**	410	**F202_101.6 P63 BN63A6**	411
9.6	85	1.6	91.5	2800	**F102_91.5 S05 M05A6**	406	**F102_91.5 P63 BN63A6**	407
9.7	84	3.0	90.4	4000	**F202_90.4 S05 M05A6**	410	**F202_90.4 P63 BN63A6**	411
10.8	75	1.9	81.3	2800	**F102_81.3 S05 M05A6**	406	**F102_81.3 P63 BN63A6**	407
11.5	71	3.5	76.8	4000	**F202_76.8 S05 M05A6**	410	**F202_76.8 P63 BN63A6**	411
12.4	66	2.1	71.1	2800	**F102_71.1 S05 M05A6**	406	**F102_71.1 P63 BN63A6**	407
14.0	58	2.4	63.0	2800	**F102_63.0 S05 M05A6**	406	**F102_63.0 P63 BN63A6**	407
15.5	53	2.7	56.7	2800	**F102_56.7 S05 M05A6**	406	**F102_56.7 P63 BN63A6**	407
18.1	45	3.1	48.7	2800	**F102_48.7 S05 M05A6**	406	**F102_48.7 P63 BN63A6**	407
19.7	41	3.4	44.7	2800	**F102_44.7 S05 M05A6**	406	**F102_44.7 P63 BN63A6**	407
22.2	37	3.8	39.6	2800	**F102_39.6 S05 M05A6**	406	**F102_39.6 P63 BN63A6**	407
24.9	33	4.3	35.3	2800	**F102_35.3 S05 M05A6**	406	**F102_35.3 P63 BN63A6**	407
26.7	31	4.6	33.0	2800	**F102_33.0 S05 M05A6**	406	**F102_33.0 P63 BN63A6**	407
29.7	28	5.1	29.6	2800	**F102_29.6 S05 M05A6**	406	**F102_29.6 P63 BN63A6**	407
34	24	5.9	25.8	2800	**F102_25.8 S05 M05A6**	406	**F102_25.8 P63 BN63A6**	407
39	21	6.6	22.8	2800	**F102_22.8 S05 M05A6**	406	**F102_22.8 P63 BN63A6**	407
46	18	7.8	19.3	2800	**F102_19.3 S05 M05A6**	406	**F102_19.3 P63 BN63A6**	407
52	16	8.9	17.0	2800	**F102_17.0 S05 M05A6**	406	**F102_17.0 P63 BN63A6**	407
60	14	10.1	14.6	2700	**F102_14.6 S05 M05A6**	406	**F102_14.6 P63 BN63A6**	407
68	12	10.3	13.0	2600	**F102_13.0 S05 M05A6**	406	**F102_13.0 P63 BN63A6**	407
76	11	10.3	11.5	2500	**F102_11.5 S05 M05A6**	406	**F102_11.5 P63 BN63A6**	407
90	9	11.8	9.8	2370	**F102_9.8 S05 M05A6**	406	**F102_9.8 P63 BN63A6**	407
103	8	11.8	8.6	2270	**F102_8.6 S05 M05A6**	406	**F102_8.6 P63 BN63A6**	407
119	7	13.2	7.4	2160	**F102_7.4 S05 M05A6**	406	**F102_7.4 P63 BN63A6**	407

0.12 kW

n_2 min-1	M_2 Nm	S	i	R_{n2} N	IE1		IEC IE1	
0.40	2623	1.9	2188	35000			**F704_2188 P63 BN63B6**	435
0.51	2058	2.5	1717	35000			**F704_1717 P63 BN63B6**	435
0.60	1742	2.9	2188	35000			**F704_2188 P63 BN63A4**	435
0.65	1607	3.1	2019	35000			**F704_2019 P63 BN63A4**	435
0.76	1368	2.1	1141	20000			**F604_1141 P63 BN63B6**	431
0.89	1178	0.9	982.4	8500	**F414_982.4 S05 M05B6**	422	**F414_982.4 P63 BN63B6**	423
0.96	1090	1.0	1411	8500	**F414_1411 S05 M05A4**	422	**F414_1411 P63 BN63A4**	423
1.1	938	1.2	1213	8500	**F414_1213 S05 M05A4**	422	**F414_1213 P63 BN63A4**	423
1.2	844	1.3	1092	8500	**F414_1092 S05 M05A4**	422	**F414_1092 P63 BN63A4**	423
1.4	759	1.4	982.4	8500	**F414_982.4 S05 M05A4**	422	**F414_982.4 P63 BN63A4**	423
1.5	696	1.6	900.5	8500	**F414_900.5 S05 M05A4**	422	**F414_900.5 P63 BN63A4**	423
1.6	643	0.9	831.6	6500	**F314_831.6 S05 M05A4**	418	**F314_831.6 P63 BN63A4**	419
1.7	629	1.7	813.8	8500	**F414_813.8 S05 M05A4**	422	**F414_813.8 P63 BN63A4**	423
1.8	589	1.0	762.3	6500	**F314_762.3 S05 M05A4**	418	**F314_762.3 P63 BN63A4**	419
1.8	571	1.9	739.4	8500	**F414_739.4 S05 M05A4**	422	**F414_739.4 P63 BN63A4**	423
2.0	530	1.1	685.6	6500	**F314_685.6 S05 M05A4**	418	**F314_685.6 P63 BN63A4**	419
2.0	533	2.1	690.1	8500	**F414_690.1 S05 M05A4**	422	**F414_690.1 P63 BN63A4**	423
2.2	479	1.3	619.9	6500	**F314_619.9 S05 M05A4**	418	**F314_619.9 P63 BN63A4**	419
2.3	456	0.9	589.7	6500	**F254_589.7 S05 M05A4**	414	**F254_589.7 P63 BN63A4**	415
2.3	447	1.3	578.6	6500	**F314_578.6 S05 M05A4**	418	**F314_578.6 P63 BN63A4**	419
2.5	425	2.6	549.8	8500	**F414_549.8 S05 M05A4**	422	**F414_549.8 P63 BN63A4**	423
2.6	408	1.0	527.3	6500	**F254_527.3 S05 M05A4**	414	**F254_527.3 P63 BN63A4**	415

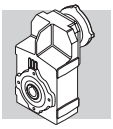

0.12 kW

n_2 min-1	M_2 Nm	S	i	R_{n2} N	IE1		IEC IE1	
2.6	408	1.5	527.8	6500	**F314_527.8 S05 M05A4**	418	**F314_527.8 P63 BN63A4**	419
2.9	360	1.1	466.0	6500	**F254_466.0 S05 M05A4**	414	**F254_466.0 P63 BN63A4**	415
2.9	358	1.7	462.6	6500	**F314_462.6 S05 M05A4**	418	**F314_462.6 P63 BN63A4**	419
3.1	336	1.2	434.9	6500	**F254_434.9 S05 M05A4**	414	**F254_434.9 P63 BN63A4**	415
3.1	335	3.3	433.7	8500	**F414_433.7 S05 M05A4**	422	**F414_433.7 P63 BN63A4**	423
3.2	324	1.9	418.9	6500	**F314_418.9 S05 M05A4**	418	**F314_418.9 P63 BN63A4**	419
3.4	304	1.3	393.9	6500	**F254_393.9 S05 M05A4**	414	**F254_393.9 P63 BN63A4**	415
3.6	296	2.0	374.4	6500			**F313_374.4 P63 BN63A4**	419
4.1	263	1.5	333.1	6500	**F253_333.1 S05 M05A4**	414	**F253_333.1 P63 BN63A4**	415
4.1	263	2.3	332.8	6500			**F313_332.8 P63 BN63A4**	419
4.3	250	1.0	316.9	4000	**F203_316.9 S05 M05A4**	410	**F203_316.9 P63 BN63A4**	411
4.6	232	2.6	293.8	6500			**F313_293.8 P63 BN63A4**	419
4.7	225	1.1	285.2	4000	**F203_285.2 S05 M05A4**	410	**F203_285.2 P63 BN63A4**	411
4.7	228	1.8	288.1	6500	**F253_288.1 S05 M05A4**	414	**F253_288.1 P63 BN63A4**	415
5.3	202	1.2	255.3	4000	**F203_255.3 S05 M05A4**	410	**F203_255.3 P63 BN63A4**	411
5.3	202	2.0	256.1	6500	**F253_256.1 S05 M05A4**	414	**F253_256.1 P63 BN63A4**	415
5.3	200	3.0	253.6	6500			**F313_253.6 P63 BN63A4**	419
5.9	180	2.2	227.8	6500	**F253_227.8 S05 M05A4**	414	**F253_227.8 P63 BN63A4**	415
5.9	180	3.3	228.2	6500			**F313_228.2 P63 BN63A4**	419
6.5	165	1.5	209.3	4000	**F203_209.3 S05 M05A4**	410	**F203_209.3 P63 BN63A4**	411
7.0	153	2.6	193.6	6500	**F253_193.6 S05 M05A4**	414	**F253_193.6 P63 BN63A4**	415
7.3	146	1.7	184.9	4000	**F203_184.9 S05 M05A4**	410	**F203_184.9 P63 BN63A4**	411
7.7	138	2.9	174.2	6500	**F253_174.2 S05 M05A4**	414	**F253_174.2 P63 BN63A4**	415
7.8	136	1.8	172.6	4000	**F203_172.6 S05 M05A4**	410	**F203_172.6 P63 BN63A4**	411
8.6	123	2.0	156.3	4000	**F203_156.3 S05 M05A4**	410	**F203_156.3 P63 BN63A4**	411
8.7	123	3.2	155.9	6500	**F253_155.9 S05 M05A4**	414	**F253_155.9 P63 BN63A4**	415
9.4	113	3.5	143.0	6500	**F253_143.0 S05 M05A4**	414	**F253_143.0 P63 BN63A4**	415
10.2	107	2.3	132.2	4000	**F202_132.2 S05 M05A4**	410	**F202_132.2 P63 BN63A4**	411
10.6	103	1.4	127.1	2800	**F102_127.1 S05 M05A4**	406	**F102_127.1 P63 BN63A4**	407
11.8	92	2.7	114.3	4000	**F202_114.3 S05 M05A4**	410	**F202_114.3 P63 BN63A4**	411
12.7	86	1.6	106.0	2800	**F102_106.0 S05 M05A4**	406	**F102_106.0 P63 BN63A4**	407
13.3	82	3.0	101.6	4000	**F202_101.6 S05 M05A4**	410	**F202_101.6 P63 BN63A4**	411
14.8	74	1.9	91.5	2800	**F102_91.5 S05 M05A4**	406	**F102_91.5 P63 BN63A4**	407
14.9	73	3.4	90.4	4000	**F202_90.4 S05 M05A4**	410	**F202_90.4 P63 BN63A4**	411
16.6	66	2.1	81.3	2800	**F102_81.3 S05 M05A4**	406	**F102_81.3 P63 BN63A4**	407
19.0	57	2.4	71.1	2800	**F102_71.1 S05 M05A4**	406	**F102_71.1 P63 BN63A4**	407
21.4	51	2.8	63.0	2800	**F102_63.0 S05 M05A4**	406	**F102_63.0 P63 BN63A4**	407
23.8	46	3.1	56.7	2800	**F102_56.7 S05 M05A4**	406	**F102_56.7 P63 BN63A4**	407
27.7	39	3.6	48.7	2800	**F102_48.7 S05 M05A4**	406	**F102_48.7 P63 BN63A4**	407
30	36	3.9	44.7	2800	**F102_44.7 S05 M05A4**	406	**F102_44.7 P63 BN63A4**	407
34	32	4.4	39.6	2800	**F102_39.6 S05 M05A4**	406	**F102_39.6 P63 BN63A4**	407
38	29	4.9	35.3	2800	**F102_35.3 S05 M05A4**	406	**F102_35.3 P63 BN63A4**	407
41	27	5.3	33.0	2800	**F102_33.0 S05 M05A4**	406	**F102_33.0 P63 BN63A4**	407
46	24	5.9	29.6	2800	**F102_29.6 S05 M05A4**	406	**F102_29.6 P63 BN63A4**	407
52	21	6.7	25.8	2800	**F102_25.8 S05 M05A4**	406	**F102_25.8 P63 BN63A4**	407
59	18	7.6	22.8	2700	**F102_22.8 S05 M05A4**	406	**F102_22.8 P63 BN63A4**	407
70	16	8.7	19.3	2560	**F102_19.3 S05 M05A4**	406	**F102_19.3 P63 BN63A4**	407
80	14	9.3	17.0	2450	**F102_17.0 S05 M05A4**	406	**F102_17.0 P63 BN63A4**	407
92	12	10.1	14.6	2340	**F102_14.6 S05 M05A4**	406	**F102_14.6 P63 BN63A4**	407
104	11	9.9	13.0	2250	**F102_13.0 S05 M05A4**	406	**F102_13.0 P63 BN63A4**	407
117	9	10.3	11.5	2160	**F102_11.5 S05 M05A4**	406	**F102_11.5 P63 BN63A4**	407
138	8	11.3	9.8	2050	**F102_9.8 S05 M05A4**	406	**F102_9.8 P63 BN63A4**	407
157	7	11.8	8.6	1970	**F102_8.6 S05 M05A4**	406	**F102_8.6 P63 BN63A4**	407
182	6	12.7	7.4	1870	**F102_7.4 S05 M05A4**	406	**F102_7.4 P63 BN63A4**	407

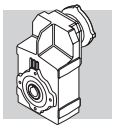

0.18 kW

n_2 min-1	M_2 Nm	S	i	R_{n2} N	IE1		IEC IE1	
0.41	3804	1.3	2188	35000	**F704_2188 S1 M1SC6**	434	**F704_2188 P71 BN71A6**	435
0.45	3511	1.4	2019	35000	**F704_2019 S1 M1SC6**	434	**F704_2019 P71 BN71A6**	435
0.45	3455	2.3	1987	45000	**F804_1987 S1 M1SC6**	437	**F804_1987 P71 BN71A6**	438
0.49	3189	2.5	1834	45000	**F804_1834 S1 M1SC6**	437	**F804_1834 P71 BN71A6**	438
0.52	2985	1.7	1717	35000	**F704_1717 S1 M1SC6**	434	**F704_1717 P71 BN71A6**	435
0.53	2972	2.7	1709	45000	**F804_1709 S1 M1SC6**	437	**F804_1709 P71 BN71A6**	438
0.57	2756	1.8	1585	35000	**F704_1585 S1 M1SC6**	434	**F704_1585 P71 BN71A6**	435
0.57	2744	2.9	1578	45000	**F804_1578 S1 M1SC6**	437	**F804_1578 P71 BN71A6**	438
0.61	2576	1.9	1481	35000	**F704_1481 S1 M1SC6**	434	**F704_1481 P71 BN71A6**	435
0.65	2406	3.3	1384	45000	**F804_1384 S1 M1SC6**	437	**F804_1384 P71 BN71A6**	438
0.66	2378	2.1	1368	35000	**F704_1368 S1 M1SC6**	434	**F704_1368 P71 BN71A6**	435
0.76	2055	2.4	1182	35000	**F704_1182 S1 M1SC6**	434	**F704_1182 P71 BN71A6**	435
0.77	2030	0.9	1168	12000	**F514_1168 S1 M1SC6**	426	**F514_1168 P71 BN71A6**	427
0.79	1985	1.5	1141	20000	**F604_1141 S1 M1SC6**	430	**F604_1141 P71 BN71A6**	431
0.83	1897	2.6	1091	35000	**F704_1091 S1 M1SC6**	434	**F704_1091 P71 BN71A6**	435
0.84	1861	1.0	1070	12000	**F514_1070 S1 M1SC6**	426	**F514_1070 P71 BN71A6**	427
0.85	1832	1.6	1054	20000	**F604_1054 S1 M1SC6**	430	**F604_1054 P71 BN71A6**	431
0.92	1703	1.1	979.4	12000	**F514_979.4 S1 M1SC6**	426	**F514_979.4 P71 BN71A6**	427
0.92	1694	3.0	974.4	35000	**F704_974.4 S1 M1SC6**	434	**F704_974.4 P71 BN71A6**	435
0.94	1667	1.7	958.9	20000	**F604_958.9 S1 M1SC6**	430	**F604_958.9 P71 BN71A6**	431
1.0	1540	1.2	885.5	12000	**F514_885.5 S1 M1SC6**	426	**F514_885.5 P71 BN71A6**	427
1.0	1539	1.9	885.1	20000	**F604_885.1 S1 M1SC6**	430	**F604_885.1 P71 BN71A6**	431
1.0	1564	3.2	899.4	35000	**F704_899.4 S1 M1SC6**	434	**F704_899.4 P71 BN71A6**	435
1.1	1437	1.3	826.4	12000	**F514_826.4 S1 M1SC6**	426	**F514_826.4 P71 BN71A6**	427
1.1	1430	3.5	822.2	35000	**F704_822.2 S1 M1SC6**	434	**F704_822.2 P71 BN71A6**	435
1.2	1286	0.9	739.4	8500	**F414_739.4 S1 M1SC6**	422	**F414_739.4 P71 BN71A6**	423
1.2	1286	0.9	739.4	8500	**F414_739.4 S1 M1SC6**	422	**F414_739.4 P71 BN71A6**	423
1.3	1200	0.9	690.1	8500	**F414_690.1 S1 M1SC6**	422	**F414_690.1 P71 BN71A6**	423
1.3	1200	0.9	690.1	8500	**F414_690.1 S1 M1SC6**	422	**F414_690.1 P71 BN71A6**	423
1.3	1165	0.9	982.4	8500	**F414_982.4 S05 M05B4**	422	**F414_982.4 P63 BN63B4**	423
1.5	1068	1.0	900.5	8500	**F414_900.5 S05 M05B4**	422	**F414_900.5 P63 BN63B4**	423
1.6	965	1.1	813.8	8500	**F414_813.8 S05 M05B4**	422	**F414_813.8 P63 BN63B4**	423
1.8	877	1.3	739.4	8500	**F414_739.4 S05 M05B4**	422	**F414_739.4 P63 BN63B4**	423
1.9	818	1.3	690.1	8500	**F414_690.1 S05 M05B4**	422	**F414_690.1 P63 BN63B4**	423
2.3	686	0.9	578.6	6500	**F314_578.6 S05 M05B4**	418	**F314_578.6 P63 BN63B4**	419
2.4	652	1.7	549.8	8500	**F414_549.8 S05 M05B4**	422	**F414_549.8 P63 BN63B4**	423
2.5	626	1.0	527.8	6500	**F314_527.8 S05 M05B4**	418	**F314_527.8 P63 BN63B4**	419
2.9	549	1.1	462.6	6500	**F314_462.6 S05 M05B4**	418	**F314_462.6 P63 BN63B4**	419
3.0	514	2.1	433.7	8500	**F414_433.7 S05 M05B4**	422	**F414_433.7 P63 BN63B4**	423
3.2	497	1.2	418.9	6500	**F314_418.9 S05 M05B4**	418	**F314_418.9 P63 BN63B4**	419
3.4	467	0.9	393.9	6500	**F254_393.9 S05 M05B4**	414	**F254_393.9 P63 BN63B4**	415
3.5	454	1.3	374.4	6500			**F313_374.4 P63 BN63B4**	419
3.8	418	2.6	344.8	8500			**F413_344.8 P63 BN63B4**	423
4.0	404	1.0	333.1	6500	**F253_333.1 S05 M05B4**	414	**F253_333.1 P63 BN63B4**	415
4.0	403	1.5	332.8	6500			**F313_332.8 P63 BN63B4**	419
4.5	356	1.7	293.8	6500			**F313_293.8 P63 BN63B4**	419
4.5	359	3.1	296.6	8500			**F413_296.6 P63 BN63B4**	423
4.6	349	1.1	288.1	6500	**F253_288.1 S05 M05B4**	414	**F253_288.1 P63 BN63B4**	415
4.9	323	3.4	266.9	8500			**F413_266.9 P63 BN63B4**	423
5.2	310	1.3	256.1	6500	**F253_256.1 S05 M05B4**	414	**F253_256.1 P63 BN63B4**	415
5.2	307	2.0	253.6	6500			**F313_253.6 P63 BN63B4**	419
5.8	276	1.4	227.8	6500	**F253_227.8 S05 M05B4**	414	**F253_227.8 P63 BN63B4**	415
5.8	277	2.2	228.2	6500			**F313_228.2 P63 BN63B4**	419
6.3	254	1.0	209.3	4000	**F203_209.3 S05 M05B4**	410	**F203_209.3 P63 BN63B4**	411
6.5	245	2.4	202.3	6500			**F313_202.3 P63 BN63B4**	419
6.8	235	1.7	193.6	6500	**F253_193.6 S05 M05B4**	414	**F253_193.6 P63 BN63B4**	415
7.1	224	1.1	184.9	4000	**F203_184.9 S05 M05B4**	410	**F203_184.9 P63 BN63B4**	411
7.1	225	2.7	185.4	6500			**F313_185.4 P63 BN63B4**	419
7.6	209	1.2	172.6	4000	**F203_172.6 S05 M05B4**	410	**F203_172.6 P63 BN63B4**	411
7.6	211	1.9	174.2	6500	**F253_174.2 S05 M05B4**	414	**F253_174.2 P63 BN63B4**	415
7.9	202	3.0	166.8	6500			**F313_166.8 P63 BN63B4**	419
8.4	189	1.3	156.3	4000	**F203_156.3 S05 M05B4**	410	**F203_156.3 P63 BN63B4**	411
8.5	189	2.1	155.9	6500	**F253_155.9 S05 M05B4**	414	**F253_155.9 P63 BN63B4**	415
8.8	183	3.3	150.8	6500			**F313_150.8 P63 BN63B4**	419
9.2	173	2.3	143.0	6500	**F253_143.0 S05 M05B4**	414	**F253_143.0 P63 BN63B4**	415

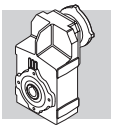

0.18 kW

n_2 min-1	M_2 Nm	S	i	R_{n2} N	IE1		IEC IE1	
9.4	171	3.5	140.7	6500			**F313_140.7 P63 BN63B4**	419
10.0	164	1.5	132.2	4000	**F202_132.2 S05 M05B4**	410	**F202_132.2 P63 BN63B4**	411
10.3	155	2.6	127.8	6500	**F253_127.8 S05 M05B4**	414	**F253_127.8 P63 BN63B4**	415
10.4	157	0.9	127.1	2800	**F102_127.1 S05 M05B4**	406	**F102_127.1 P63 BN63B4**	407
11.5	142	1.8	114.3	4000	**F202_114.3 S05 M05B4**	410	**F202_114.3 P63 BN63B4**	411
11.7	137	2.9	113.0	6500	**F253_113.0 S05 M05B4**	414	**F253_113.0 P63 BN63B4**	415
12.5	131	1.1	106.0	2800	**F102_106.0 S05 M05B4**	406	**F102_106.0 P63 BN63B4**	407
12.5	128	3.1	105.4	6500	**F253_105.4 S05 M05B4**	414	**F253_105.4 P63 BN63B4**	415
13.0	126	2.0	101.6	4000	**F202_101.6 S05 M05B4**	410	**F202_101.6 P63 BN63B4**	411
13.8	116	3.5	95.5	6500	**F253_95.5 S05 M05B4**	414	**F253_95.5 P63 BN63B4**	415
14.4	113	1.2	91.5	2800	**F102_91.5 S05 M05B4**	406	**F102_91.5 P63 BN63B4**	407
14.6	112	2.2	90.4	4000	**F202_90.4 S05 M05B4**	410	**F202_90.4 P63 BN63B4**	411
16.2	101	1.4	81.3	2800	**F102_81.3 S05 M05B4**	406	**F102_81.3 P63 BN63B4**	407
17.2	95	2.6	76.8	4000	**F202_76.8 S05 M05B4**	410	**F202_76.8 P63 BN63B4**	411
18.6	88	1.6	71.1	2800	**F102_71.1 S05 M05B4**	406	**F102_71.1 P63 BN63B4**	407
19.1	86	2.9	69.1	4000	**F202_69.1 S05 M05B4**	410	**F202_69.1 P63 BN63B4**	411
21.0	78	1.8	63.0	2800	**F102_63.0 S05 M05B4**	406	**F102_63.0 P63 BN63B4**	407
21.3	77	3.3	61.9	4000	**F202_61.9 S05 M05B4**	410	**F202_61.9 P63 BN63B4**	411
23.3	70	2.0	56.7	2800	**F102_56.7 S05 M05B4**	406	**F102_56.7 P63 BN63B4**	407
27.1	60	2.3	48.7	2800	**F102_48.7 S05 M05B4**	406	**F102_48.7 P63 BN63B4**	407
29.6	55	2.5	44.7	2800	**F102_44.7 S05 M05B4**	406	**F102_44.7 P63 BN63B4**	407
33	49	2.9	39.6	2800	**F102_39.6 S05 M05B4**	406	**F102_39.6 P63 BN63B4**	407
37	44	3.2	35.3	2800	**F102_35.3 S05 M05B4**	406	**F102_35.3 P63 BN63B4**	407
40	41	3.4	33.0	2800	**F102_33.0 S05 M05B4**	406	**F102_33.0 P63 BN63B4**	407
45	37	3.8	29.6	2800	**F102_29.6 S05 M05B4**	406	**F102_29.6 P63 BN63B4**	407
51	32	4.4	25.8	2780	**F102_25.8 S05 M05B4**	406	**F102_25.8 P63 BN63B4**	407
58	28	5.0	22.8	2680	**F102_22.8 S05 M05B4**	406	**F102_22.8 P63 BN63B4**	407
68	24	5.7	19.3	2540	**F102_19.3 S05 M05B4**	406	**F102_19.3 P63 BN63B4**	407
78	21	6.1	17.0	2440	**F102_17.0 S05 M05B4**	406	**F102_17.0 P63 BN63B4**	407
90	18	6.6	14.6	2330	**F102_14.6 S05 M05B4**	406	**F102_14.6 P63 BN63B4**	407
101	16	6.4	13.0	2240	**F102_13.0 S05 M05B4**	406	**F102_13.0 P63 BN63B4**	407
114	14	6.7	11.5	2150	**F102_11.5 S05 M05B4**	406	**F102_11.5 P63 BN63B4**	407
135	12	7.4	9.8	2040	**F102_9.8 S05 M05B4**	406	**F102_9.8 P63 BN63B4**	407
154	11	7.7	8.6	1960	**F102_8.6 S05 M05B4**	406	**F102_8.6 P63 BN63B4**	407
178	9	8.3	7.4	1870	**F102_7.4 S05 M05B4**	406	**F102_7.4 P63 BN63B4**	407
186	9	10.7	14.6	1860	**F102_14.6 S05 M05A2**	406	**F102_14.6 P63 BN63A2**	407
210	8	10.9	13.0	1790	**F102_13.0 S05 M05A2**	406	**F102_13.0 P63 BN63A2**	407
237	7	11.3	11.5	1720	**F102_11.5 S05 M05A2**	406	**F102_11.5 P63 BN63A2**	407
279	6	12.5	9.8	1630	**F102_9.8 S05 M05A2**	406	**F102_9.8 P63 BN63A2**	407
318	5	13.0	8.6	1560	**F102_8.6 S05 M05A2**	406	**F102_8.6 P63 BN63A2**	407
369	4	14.2	7.4	1490	**F102_7.4 S05 M05A2**	406	**F102_7.4 P63 BN63A2**	407

0.25 kW

n_2 min-1	M_2 Nm	S	i	R_{n2} N	IE1		IEC IE1	
0.41	5283	0.9	2188	35000	**F704_2188 S1 M1SD6**	434	**F704_2188 P71 BN71B6**	435
0.45	4877	1.0	2019	35000	**F704_2019 S1 M1SD6**	434	**F704_2019 P71 BN71B6**	435
0.45	4799	1.7	1987	45000	**F804_1987 S1 M1SD6**	437	**F804_1987 P71 BN71B6**	438
0.49	4430	1.8	1834	45000	**F804_1834 S1 M1SD6**	437	**F804_1834 P71 BN71B6**	438
0.52	4146	1.2	1717	35000	**F704_1717 S1 M1SD6**	434	**F704_1717 P71 BN71B6**	435
0.53	4128	1.9	1709	45000	**F804_1709 S1 M1SD6**	437	**F804_1709 P71 BN71B6**	438
0.57	3827	1.3	1585	35000	**F704_1585 S1 M1SD6**	434	**F704_1585 P71 BN71B6**	435
0.57	3810	2.1	1578	45000	**F804_1578 S1 M1SD6**	437	**F804_1578 P71 BN71B6**	438
0.61	3578	1.4	1481	35000	**F704_1481 S1 M1SD6**	434	**F704_1481 P71 BN71B6**	435
0.65	3342	2.4	1384	45000	**F804_1384 S1 M1SD6**	437	**F804_1384 P71 BN71B6**	438
0.66	3303	1.5	1368	35000	**F704_1368 S1 M1SD6**	434	**F704_1368 P71 BN71B6**	435
0.70	3085	2.6	1277	45000	**F804_1277 S1 M1SD6**	437	**F804_1277 P71 BN71B6**	438
0.76	2854	1.8	1182	35000	**F704_1182 S1 M1SD6**	434	**F704_1182 P71 BN71B6**	435

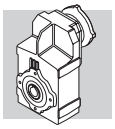

0.25 kW

n_2 min-1	M_2 Nm	S	i	R_{n2} N	IE1		IEC IE1	
0.79	2757	1.1	1141	20000	**F604_1141 S1 M1SD6**	430	**F604_1141 P71 BN71B6**	431
0.79	2769	2.9	1146	45000	**F804_1146 S1 M1SD6**	437	**F804_1146 P71 BN71B6**	438
0.83	2635	1.9	1091	35000	**F704_1091 S1 M1SD6**	434	**F704_1091 P71 BN71B6**	435
0.85	2545	1.1	1054	20000	**F604_1054 S1 M1SD6**	430	**F604_1054 P71 BN71B6**	431
0.85	2556	3.1	1058	45000	**F804_1058 S1 M1SD6**	437	**F804_1058 P71 BN71B6**	438
0.92	2353	2.1	974.4	35000	**F704_974.4 S1 M1SD6**	434	**F704_974.4 P71 BN71B6**	435
0.94	2316	1.3	958.9	20000	**F604_958.9 S1 M1SD6**	430	**F604_958.9 P71 BN71B6**	431
1.0	2138	1.4	885.1	20000	**F604_885.1 S1 M1SD6**	430	**F604_885.1 P71 BN71B6**	431
1.0	2172	2.3	899.4	35000	**F704_899.4 S1 M1SD6**	434	**F704_899.4 P71 BN71B6**	435
1.1	1996	0.9	826.4	12000	**F514_826.4 S1 M1SD6**	426	**F514_826.4 P71 BN71B6**	427
1.1	1986	2.5	822.2	35000	**F704_822.2 S1 M1SD6**	434	**F704_822.2 P71 BN71B6**	435
1.3	1633	1.1	676.3	12000	**F514_676.3 S1 M1SD6**	426	**F514_676.3 P71 BN71B6**	427
1.4	1600	1.8	662.4	20000	**F604_662.4 S1 M1SD6**	430	**F604_662.4 P71 BN71B6**	431
1.4	1588	3.1	657.4	35000	**F704_657.4 S1 M1SD6**	434	**F704_657.4 P71 BN71B6**	435
1.5	1477	2.0	611.4	20000	**F604_611.4 S1 M1SD6**	430	**F604_611.4 P71 BN71B6**	431
1.5	1466	3.4	606.8	35000	**F704_606.8 S1 M1SD6**	434	**F704_606.8 P71 BN71B6**	435
1.7	1282	0.9	813.8	8500	**F414_813.8 S05 M05C4**	422	**F414_813.8 P71 BN71A4**	423
1.8	1199	0.9	739.4	8500	**F414_739.4 S05 M05C4**	422	**F414_739.4 P71 BN71A4**	423
1.9	1119	1.0	690.1	8500	**F414_690.1 S05 M05C4**	422	**F414_690.1 P71 BN71A4**	423
2.4	892	1.2	549.8	8500	**F414_549.8 S05 M05C4**	422	**F414_549.8 P71 BN71A4**	423
2.8	783	2.3	317.3	12000	**F513_317.3 S1 M1SD6**	426	**F513_317.3 P71 BN71B6**	427
3.1	704	1.6	433.7	8500	**F414_433.7 S05 M05C4**	422	**F414_433.7 P71 BN71A4**	423
3.2	679	0.9	418.9	6500	**F314_418.9 S05 M05C4**	418	**F314_418.9 P71 BN71A4**	419
3.7	603	1.0	374.4	6500			**F313_374.4 P71 BN71A4**	419
4.0	555	2.0	344.8	8500			**F413_344.8 P71 BN71A4**	423
4.1	536	1.1	332.8	6500			**F313_332.8 P71 BN71A4**	419
4.7	473	1.3	293.8	6500			**F313_293.8 P71 BN71A4**	419
4.7	477	2.3	296.6	8500			**F413_296.6 P71 BN71A4**	423
5.2	425	0.9	256.1	6500	**F253_256.1 S05 M05C4**	414	**F253_256.1 P71 BN71A4**	415
5.2	430	2.6	266.9	8500			**F413_266.9 P71 BN71A4**	423
5.4	408	1.5	253.6	6500			**F313_253.6 P71 BN71A4**	419
5.7	387	2.8	240.1	8500			**F413_240.1 P71 BN71A4**	423
5.9	378	1.1	227.8	6500	**F253_227.8 S05 M05C4**	414	**F253_227.8 P71 BN71A4**	415
6.0	367	1.6	228.2	6500			**F313_228.2 P71 BN71A4**	419
6.3	354	3.1	220.1	8500			**F413_220.1 P71 BN71A4**	423
6.8	326	1.8	202.3	6500			**F313_202.3 P71 BN71A4**	419
6.9	321	1.2	193.6	6500	**F253_193.6 S05 M05C4**	414	**F253_193.6 P71 BN71A4**	415
6.9	320	3.4	198.9	8500			**F413_198.9 P71 BN71A4**	423
7.4	299	2.0	185.4	6500			**F313_185.4 P71 BN71A4**	419
7.7	289	1.4	174.2	6500	**F253_174.2 S05 M05C4**	414	**F253_174.2 P71 BN71A4**	415
8.0	278	0.9	172.6	4000	**F203_172.6 S05 M05C4**	410	**F203_172.6 P71 BN71A4**	411
8.3	268	2.2	166.8	6500			**F313_166.8 P71 BN71A4**	419
8.6	259	1.0	156.3	4000	**F203_156.3 S05 M05C4**	410	**F203_156.3 P71 BN71A4**	411
8.6	259	1.5	155.9	6500	**F253_155.9 S05 M05C4**	414	**F253_155.9 P71 BN71A4**	415
9.2	243	2.5	150.8	6500			**F313_150.8 P71 BN71A4**	419
9.7	230	1.7	143.0	6500	**F253_143.0 S05 M05C4**	414	**F253_143.0 P71 BN71A4**	415
9.8	227	2.6	140.7	6500			**F313_140.7 P71 BN71A4**	419
10.1	224	1.1	132.2	4000	**F202_132.2 S05 M05C4**	410	**F202_132.2 P71 BN71A4**	411
10.5	212	1.9	127.8	6500	**F253_127.8 S05 M05C4**	414	**F253_127.8 P71 BN71A4**	415
10.7	207	2.9	128.4	6500			**F313_128.4 P71 BN71A4**	419
11.7	194	1.3	114.3	4000	**F202_114.3 S05 M05C4**	410	**F202_114.3 P71 BN71A4**	411
12.2	182	2.2	113.0	6500	**F253_113.0 S05 M05C4**	414	**F253_113.0 P71 BN71A4**	415
12.3	181	3.3	112.5	6500			**F313_112.5 P71 BN71A4**	419
12.7	175	2.3	105.4	6500	**F253_105.4 S05 M05C4**	414	**F253_105.4 P71 BN71A4**	415
13.2	172	1.5	101.6	4000	**F202_101.6 S05 M05C4**	410	**F202_101.6 P71 BN71A4**	411
14.0	158	2.5	95.5	6500	**F253_95.5 S05 M05C4**	414	**F253_95.5 P71 BN71A4**	415
14.6	155	0.9	91.5	2800	**F102_91.5 S05 M05C4**	406	**F102_91.5 P71 BN71A4**	407

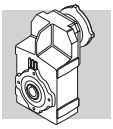

0.25 kW

n_2 min-1	M_2 Nm	S	i	R_{n2} N	IE1		IEC IE1	
14.8	153	1.6	90.4	4000	**F202_90.4 S05 M05C4**	410	**F202_90.4 P71 BN71A4**	411
16.1	138	2.9	83.4	6500	**F253_83.4 S05 M05C4**	414	**F253_83.4 P71 BN71A4**	415
16.5	138	1.0	81.3	2800	**F102_81.3 S05 M05C4**	406	**F102_81.3 P71 BN71A4**	407
17.4	130	1.9	76.8	4000	**F202_76.8 S05 M05C4**	410	**F202_76.8 P71 BN71A4**	411
17.5	127	3.2	76.6	6420	**F253_76.6 S05 M05C4**	414	**F253_76.6 P71 BN71A4**	415
18.8	120	1.2	71.1	2800	**F102_71.1 S05 M05C4**	406	**F102_71.1 P71 BN71A4**	407
19.4	117	2.1	69.1	4000	**F202_69.1 S05 M05C4**	410	**F202_69.1 P71 BN71A4**	411
21.3	107	1.3	63.0	2800	**F102_63.0 S05 M05C4**	406	**F102_63.0 P71 BN71A4**	407
21.7	105	2.4	61.9	4000	**F202_61.9 S05 M05C4**	410	**F202_61.9 P71 BN71A4**	411
23.6	96	1.5	56.7	2800	**F102_56.7 S05 M05C4**	406	**F102_56.7 P71 BN71A4**	407
23.6	96	2.6	56.7	4000	**F202_56.7 S05 M05C4**	410	**F202_56.7 P71 BN71A4**	411
26.4	86	2.9	50.7	4000	**F202_50.7 S05 M05C4**	410	**F202_50.7 P71 BN71A4**	411
27.5	83	1.7	48.7	2800	**F102_48.7 S05 M05C4**	406	**F102_48.7 P71 BN71A4**	407
29.9	76	3.3	44.8	3870	**F202_44.8 S05 M05C4**	410	**F202_44.8 P71 BN71A4**	411
30	76	1.9	44.7	2800	**F102_44.7 S05 M05C4**	406	**F102_44.7 P71 BN71A4**	407
34	67	2.1	39.6	2800	**F102_39.6 S05 M05C4**	406	**F102_39.6 P71 BN71A4**	407
38	60	2.3	35.3	2800	**F102_35.3 S05 M05C4**	406	**F102_35.3 P71 BN71A4**	407
41	56	2.5	33.0	2800	**F102_33.0 S05 M05C4**	406	**F102_33.0 P71 BN71A4**	407
45	50	2.8	29.6	2800	**F102_29.6 S05 M05C4**	406	**F102_29.6 P71 BN71A4**	407
52	44	3.2	25.8	2750	**F102_25.8 S05 M05C4**	406	**F102_25.8 P71 BN71A4**	407
59	39	3.6	22.8	2650	**F102_22.8 S05 M05C4**	406	**F102_22.8 P71 BN71A4**	407
69	33	4.2	19.3	2520	**F102_19.3 S05 M05C4**	406	**F102_19.3 P71 BN71A4**	407
81	28	4.6	17.0	2420	**F102_17.0 S05 M05C4**	406	**F102_17.0 P71 BN71A4**	407
91	25	4.8	14.6	2310	**F102_14.6 S05 M05C4**	406	**F102_14.6 P71 BN71A4**	407
103	22	4.7	13.0	2230	**F102_13.0 S05 M05C4**	406	**F102_13.0 P71 BN71A4**	407
120	19	5.1	11.5	2140	**F102_11.5 S05 M05C4**	406	**F102_11.5 P71 BN71A4**	407
137	17	5.4	9.8	2030	**F102_9.8 S05 M05C4**	406	**F102_9.8 P71 BN71A4**	407
161	14	5.8	8.6	1950	**F102_8.6 S05 M05C4**	406	**F102_8.6 P71 BN71A4**	407
181	13	6.1	7.4	1860	**F102_7.4 S05 M05C4**	406	**F102_7.4 P71 BN71A4**	407
187	12	7.7	14.6	1850	**F102_14.6 S05 M05B2**	406	**F102_14.6 P63 BN63B2**	407
210	11	7.9	13.0	1780	**F102_13.0 S05 M05B2**	406	**F102_13.0 P63 BN63B2**	407
237	10	8.2	11.5	1710	**F102_11.5 S05 M05B2**	406	**F102_11.5 P63 BN63B2**	407
280	8	9.0	9.8	1620	**F102_9.8 S05 M05B2**	406	**F102_9.8 P63 BN63B2**	407
319	7	9.4	8.6	1550	**F102_8.6 S05 M05B2**	406	**F102_8.6 P63 BN63B2**	407
370	6	10.3	7.4	1480	**F102_7.4 S05 M05B2**	406	**F102_7.4 P63 BN63B2**	407

0.37 kW

n_2 min-1	M_2 Nm	S	i	R_{n2} N	IE1		IEC IE1	
0.46	7024	1.1	1987	45000	**F804_1987 S1 M1LA6**	437	**F804_1987 P80 BN80A6**	438
0.50	6484	1.2	1834	45000	**F804_1834 S1 M1LA6**	437	**F804_1834 P80 BN80A6**	438
0.53	6042	1.3	1709	45000	**F804_1709 S1 M1LA6**	437	**F804_1709 P80 BN80A6**	438
0.57	5602	0.9	1585	35000	**F704_1585 S1 M1LA6**	434	**F704_1585 P80 BN80A6**	435
0.58	5577	1.4	1578	45000	**F804_1578 S1 M1LA6**	437	**F804_1578 P80 BN80A6**	438
0.61	5238	1.0	1481	35000	**F704_1481 S1 M1LA6**	434	**F704_1481 P80 BN80A6**	435
0.63	5137	1.0	2188	35000	**F704_2188 S1 M1SD4**	434	**F704_2188 P71 BN71B4**	435
0.68	4742	1.1	2019	35000	**F704_2019 S1 M1SD4**	434	**F704_2019 P71 BN71B4**	435
0.69	4666	1.7	1987	45000	**F804_1987 S1 M1SD4**	437	**F804_1987 P71 BN71B4**	438
0.75	4307	1.9	1834	45000	**F804_1834 S1 M1SD4**	437	**F804_1834 P71 BN71B4**	438
0.80	4031	1.2	1717	35000	**F704_1717 S1 M1SD4**	434	**F704_1717 P71 BN71B4**	435
0.80	4013	2.0	1709	45000	**F804_1709 S1 M1SD4**	437	**F804_1709 P71 BN71B4**	438
0.86	3721	1.3	1585	35000	**F704_1585 S1 M1SD4**	434	**F704_1585 P71 BN71B4**	435
0.87	3705	2.2	1578	45000	**F804_1578 S1 M1SD4**	437	**F804_1578 P71 BN71B4**	438
0.92	3479	1.4	1481	35000	**F704_1481 S1 M1SD4**	434	**F704_1481 P71 BN71B4**	435
0.99	3250	2.5	1384	45000	**F804_1384 S1 M1SD4**	437	**F804_1384 P71 BN71B4**	438

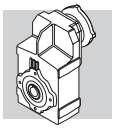

0.37 kW

n_2 min^{-1}	M_2 Nm	S	i	R_{n2} N	IE1		IEC IE1	
1.0	3211	1.6	1368	35000	**F704_1368 S1 M1SD4**	434	**F704_1368 P71 BN71B4**	435
1.1	3000	2.7	1277	45000	**F804_1277 S1 M1SD4**	437	**F804_1277 P71 BN71B4**	438
1.2	2680	1.1	1141	20000	**F604_1141 S1 M1SD4**	430	**F604_1141 P71 BN71B4**	431
1.2	2775	1.8	1182	35000	**F704_1182 S1 M1SD4**	434	**F704_1182 P71 BN71B4**	435
1.2	2692	3.0	1146	45000	**F804_1146 S1 M1SD4**	437	**F804_1146 P71 BN71B4**	438
1.3	2474	1.2	1054	20000	**F604_1054 S1 M1SD4**	430	**F604_1054 P71 BN71B4**	431
1.3	2562	2.0	1091	35000	**F704_1091 S1 M1SD4**	434	**F704_1091 P71 BN71B4**	435
1.3	2485	3.2	1058	45000	**F804_1058 S1 M1SD4**	437	**F804_1058 P71 BN71B4**	438
1.4	2252	1.3	958.9	20000	**F604_958.9 S1 M1SD4**	430	**F604_958.9 P71 BN71B4**	431
1.4	2288	2.2	974.4	35000	**F704_974.4 S1 M1SD4**	434	**F704_974.4 P71 BN71B4**	435
1.5	2079	0.9	885.5	12000	**F514_885.5 S1 M1SD4**	426	**F514_885.5 P71 BN71B4**	427
1.5	2078	1.4	885.1	20000	**F604_885.1 S1 M1SD4**	430	**F604_885.1 P71 BN71B4**	431
1.5	2112	2.4	899.4	35000	**F704_899.4 S1 M1SD4**	434	**F704_899.4 P71 BN71B4**	435
1.7	1941	0.9	826.4	12000	**F514_826.4 S1 M1SD4**	426	**F514_826.4 P71 BN71B4**	427
1.7	1931	2.6	822.2	35000	**F704_822.2 S1 M1SD4**	434	**F704_822.2 P71 BN71B4**	435
2.0	1588	1.1	676.3	12000	**F514_676.3 S1 M1SD4**	426	**F514_676.3 P71 BN71B4**	427
2.1	1556	1.9	662.4	20000	**F604_662.4 S1 M1SD4**	430	**F604_662.4 P71 BN71B4**	431
2.1	1544	3.2	657.4	35000	**F704_657.4 S1 M1SD4**	434	**F704_657.4 P71 BN71B4**	435
2.2	1436	2.0	611.4	20000	**F604_611.4 S1 M1SD4**	430	**F604_611.4 P71 BN71B4**	431
2.3	1425	3.5	606.8	35000	**F704_606.8 S1 M1SD4**	434	**F704_606.8 P71 BN71B4**	435
2.5	1291	0.9	549.8	8500	**F414_549.8 S1 M1SD4**	422	**F414_549.8 P71 BN71B4**	423
2.6	1246	1.4	530.5	12000	**F514_530.5 S1 M1SD4**	426	**F514_530.5 P71 BN71B4**	427
2.6	1246	2.3	530.7	20000	**F604_530.7 S1 M1SD4**	430	**F604_530.7 P71 BN71B4**	431
2.8	1150	2.5	489.8	20000	**F604_489.8 S1 M1SD4**	430	**F604_489.8 P71 BN71B4**	431
3.2	1018	1.1	433.7	8500	**F414_433.7 S1 M1SD4**	422	**F414_433.7 P71 BN71B4**	423
3.2	1008	1.8	429.1	12000	**F514_429.1 S1 M1SD4**	426	**F514_429.1 P71 BN71B4**	427
3.2	1016	2.9	432.6	20000	**F604_432.6 S1 M1SD4**	430	**F604_432.6 P71 BN71B4**	431
3.4	938	3.1	399.3	20000	**F604_399.3 S1 M1SD4**	430	**F604_399.3 P71 BN71B4**	431
3.9	846	2.1	352.5	12000	**F513_352.5 S1 M1SD4**	426	**F513_352.5 P71 BN71B4**	427
4.0	827	1.3	344.8	8500	**F413_344.8 S1 M1SD4**	422	**F413_344.8 P71 BN71B4**	423
4.3	761	2.4	317.3	12000	**F513_317.3 S1 M1SD4**	426	**F513_317.3 P71 BN71B4**	427
4.6	712	1.5	296.6	8500	**F413_296.6 S1 M1SD4**	422	**F413_296.6 P71 BN71B4**	423
4.8	686	2.6	285.9	12000	**F513_285.9 S1 M1SD4**	426	**F513_285.9 P71 BN71B4**	427
5.1	641	1.7	266.9	8500	**F413_266.9 S1 M1SD4**	422	**F413_266.9 P71 BN71B4**	423
5.2	629	2.9	262.1	12000	**F513_262.1 S1 M1SD4**	426	**F513_262.1 P71 BN71B4**	427
5.4	609	1.0	253.6	6500	**F313_253.6 S1 M1SD4**	418	**F313_253.6 P71 BN71B4**	419
5.7	576	1.9	240.1	8500	**F413_240.1 S1 M1SD4**	422	**F413_240.1 P71 BN71B4**	423
5.7	576	3.1	239.8	12000	**F513_239.8 S1 M1SD4**	426	**F513_239.8 P71 BN71B4**	427
6.0	548	1.1	228.2	6500	**F313_228.2 S1 M1SD4**	418	**F313_228.2 P71 BN71B4**	419
6.2	528	2.1	220.1	8500	**F413_220.1 S1 M1SD4**	422	**F413_220.1 P71 BN71B4**	423
6.3	520	3.5	216.9	12000	**F513_216.9 S1 M1SD4**	426	**F513_216.9 P71 BN71B4**	427
6.8	485	1.2	202.3	6500	**F313_202.3 S1 M1SD4**	418	**F313_202.3 P71 BN71B4**	419
6.9	477	2.3	198.9	8500	**F413_198.9 S1 M1SD4**	422	**F413_198.9 P71 BN71B4**	423
7.4	445	1.3	185.4	6500	**F313_185.4 S1 M1SD4**	418	**F313_185.4 P71 BN71B4**	419
7.6	434	2.5	180.7	8500	**F413_180.7 S1 M1SD4**	422	**F413_180.7 P71 BN71B4**	423
7.9	418	1.0	174.2	6500	**F253_174.2 S1 M1SD4**	414	**F253_174.2 P71 BN71B4**	415
8.1	405	2.7	168.7	8500	**F413_168.7 S1 M1SD4**	422	**F413_168.7 P71 BN71B4**	423
8.2	400	1.5	166.8	6500	**F313_166.8 S1 M1SD4**	418	**F313_166.8 P71 BN71B4**	419
8.8	374	1.1	155.9	6500	**F253_155.9 S1 M1SD4**	414	**F253_155.9 P71 BN71B4**	415
9.1	362	1.7	150.8	6500	**F313_150.8 S1 M1SD4**	418	**F313_150.8 P71 BN71B4**	419
9.6	343	1.2	143.0	6500	**F253_143.0 S1 M1SD4**	414	**F253_143.0 P71 BN71B4**	415
9.7	338	1.8	140.7	6500	**F313_140.7 S1 M1SD4**	418	**F313_140.7 P71 BN71B4**	419
10.2	323	3.4	134.4	8500	**F413_134.4 S1 M1SD4**	422	**F413_134.4 P71 BN71B4**	423
10.7	307	1.3	127.8	6500	**F253_127.8 S1 M1SD4**	414	**F253_127.8 P71 BN71B4**	415
10.7	308	1.9	128.4	6500	**F313_128.4 S1 M1SD4**	418	**F313_128.4 P71 BN71B4**	419
12.1	271	1.5	113.0	6500	**F253_113.0 S1 M1SD4**	414	**F253_113.0 P71 BN71B4**	415
12.2	270	2.2	112.5	6500	**F313_112.5 S1 M1SD4**	418	**F313_112.5 P71 BN71B4**	419
13.0	253	1.6	105.4	6500	**F253_105.4 S1 M1SD4**	414	**F253_105.4 P71 BN71B4**	415
13.4	245	2.5	101.9	6500	**F313_101.9 S1 M1SD4**	418	**F313_101.9 P71 BN71B4**	419
13.5	249	1.0	101.6	4000			**F202_101.6 P71 BN71B4**	411
14.3	229	1.7	95.5	6490	**F253_95.5 S1 M1SD4**	414	**F253_95.5 P71 BN71B4**	415
15.2	222	1.1	90.4	4000	**F202_90.4 S1 M1SD4**	410	**F202_90.4 P71 BN71B4**	411
15.7	210	2.9	87.4	6500	**F313_87.4 S1 M1SD4**	418	**F313_87.4 P71 BN71B4**	419
16.4	200	2.0	83.4	6280	**F253_83.4 S1 M1SD4**	414	**F253_83.4 P71 BN71B4**	415
17.4	189	3.2	78.9	6500	**F313_78.9 S1 M1SD4**	418	**F313_78.9 P71 BN71B4**	419

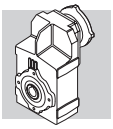

0.37 kW

n_2 min-1	M_2 Nm	S	i	R_{n2} N	 IE1		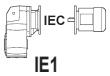 IE1	
17.8	188	1.3	76.8	4000	**F202_76.8 S1 M1SD4**	410	**F202_76.8 P71 BN71B4**	411
17.9	184	2.2	76.6	6160	**F253_76.6 S1 M1SD4**	414	**F253_76.6 P71 BN71B4**	415
19.8	169	1.5	69.1	4000	**F202_69.1 S1 M1SD4**	410	**F202_69.1 P71 BN71B4**	411
21.0	157	2.6	65.3	5920	**F253_65.3 S1 M1SD4**	414	**F253_65.3 P71 BN71B4**	415
21.7	154	0.9	63.0	2800	**F102_63.0 S1 M1SD4**	406	**F102_63.0 P71 BN71B4**	407
22.1	152	1.6	61.9	4000	**F202_61.9 S1 M1SD4**	410	**F202_61.9 P71 BN71B4**	411
23.5	140	2.9	58.3	5750	**F253_58.3 S1 M1SD4**	414	**F253_58.3 P71 BN71B4**	415
24.2	139	1.0	56.7	2800	**F102_56.7 S1 M1SD4**	406	**F102_56.7 P71 BN71B4**	407
24.2	139	1.8	56.7	4000	**F202_56.7 S1 M1SD4**	410	**F202_56.7 P71 BN71B4**	411
27.0	124	2.0	50.7	3900	**F202_50.7 S1 M1SD4**	410	**F202_50.7 P71 BN71B4**	411
27.0	122	3.3	50.8	5540	**F253_50.8 S1 M1SD4**	414	**F253_50.8 P71 BN71B4**	415
28.1	119	1.2	48.7	2800	**F102_48.7 S1 M1SD4**	406	**F102_48.7 P71 BN71B4**	407
31	110	1.3	44.7	2800	**F102_44.7 S1 M1SD4**	406	**F102_44.7 P71 BN71B4**	407
31	110	2.3	44.8	3770	**F202_44.8 S1 M1SD4**	410	**F202_44.8 P71 BN71B4**	411
31	109	3.5	44.4	5370	**F252_44.4 S1 M1SD4**	414	**F252_44.4 P71 BN71B4**	415
33	103	2.4	41.8	3700	**F202_41.8 S1 M1SD4**	410	**F202_41.8 P71 BN71B4**	411
35	97	1.4	39.6	2800	**F102_39.6 S1 M1SD4**	406	**F102_39.6 P71 BN71B4**	407
36	93	2.7	37.9	3600	**F202_37.9 S1 M1SD4**	410	**F202_37.9 P71 BN71B4**	411
39	87	1.6	35.3	2800	**F102_35.3 S1 M1SD4**	406	**F102_35.3 P71 BN71B4**	407
41	81	3.1	33.1	3460	**F202_33.1 S1 M1SD4**	410	**F202_33.1 P71 BN71B4**	411
42	81	1.7	33.0	2800	**F102_33.0 S1 M1SD4**	406	**F102_33.0 P71 BN71B4**	407
45	75	3.4	30.4	3380	**F202_30.4 S1 M1SD4**	410	**F202_30.4 P71 BN71B4**	411
46	73	1.9	29.6	2800	**F102_29.6 S1 M1SD4**	406	**F102_29.6 P71 BN71B4**	407
53	63	2.2	25.8	2690	**F102_25.8 S1 M1SD4**	406	**F102_25.8 P71 BN71B4**	407
60	56	2.5	22.8	2600	**F102_22.8 S1 M1SD4**	406	**F102_22.8 P71 BN71B4**	407
71	47	2.9	19.3	2470	**F102_19.3 S1 M1SD4**	406	**F102_19.3 P71 BN71B4**	407
81	42	3.1	17.0	2380	**F102_17.0 S1 M1SD4**	406	**F102_17.0 P71 BN71B4**	407
94	36	3.3	14.6	2280	**F102_14.6 S1 M1SD4**	406	**F102_14.6 P71 BN71B4**	407
105	32	3.3	13.0	2200	**F102_13.0 S1 M1SD4**	406	**F102_13.0 P71 BN71B4**	407
119	28	3.4	11.5	2120	**F102_11.5 S1 M1SD4**	406	**F102_11.5 P71 BN71B4**	407
140	24	3.7	9.8	2010	**F102_9.8 S1 M1SD4**	406	**F102_9.8 P71 BN71B4**	407
160	21	3.9	8.6	1930	**F102_8.6 S1 M1SD4**	406	**F102_8.6 P71 BN71B4**	407
185	18	4.2	7.4	1850	**F102_7.4 S1 M1SD4**	406	**F102_7.4 P71 BN71B4**	407
193	17	5.4	14.6	1830	**F102_14.6 S05 M05C2**	406	**F102_14.6 P71 BN71A2**	407
216	16	5.5	13.0	1760	**F102_13.0 S05 M05C2**	406	**F102_13.0 P71 BN71A2**	407
244	14	5.7	11.5	1690	**F102_11.5 S05 M05C2**	406	**F102_11.5 P71 BN71A2**	407
289	12	6.3	9.8	1610	**F102_9.8 S05 M05C2**	406	**F102_9.8 P71 BN71A2**	407
329	10	6.6	8.6	1540	**F102_8.6 S05 M05C2**	406	**F102_8.6 P71 BN71A2**	407
381	9	7.1	7.4	1470	**F102_7.4 S05 M05C2**	406	**F102_7.4 P71 BN71A2**	407

0.55 kW

n_2 min-1	M_2 Nm	S	i	R_{n2} N	 IE1		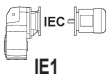 IE1	
0.44	10909	1.3	2099	55000	**F904_2099 S2 M2SA6**	440	**F904_2099 P80 BN80B6**	441
0.47	10070	1.4	1937	55000	**F904_1937 S2 M2SA6**	440	**F904_1937 P80 BN80B6**	441
0.54	8884	0.9	1709	45000	**F804_1709 S2 M2SA6**	437	**F804_1709 P80 BN80B6**	438
0.54	8849	1.6	1702	55000	**F904_1702 S2 M2SA6**	440	**F904_1702 P80 BN80B6**	441
0.58	8201	1.0	1578	45000	**F804_1578 S2 M2SA6**	437	**F804_1578 P80 BN80B6**	438
0.59	8168	1.7	1571	55000	**F904_1571 S2 M2SA6**	440	**F904_1571 P80 BN80B6**	441
0.64	7422	1.9	1428	55000	**F904_1428 S2 M2SA6**	440	**F904_1428 P80 BN80B6**	441
0.66	7193	1.1	1384	45000	**F804_1384 S2 M2SA6**	437	**F804_1384 P80 BN80B6**	438
0.69	6885	1.2	1987	45000	**F804_1987 S1 M1LA4**	437	**F804_1987 P80 BN80A4**	438
0.75	6356	1.3	1834	45000	**F804_1834 S1 M1LA4**	437	**F804_1834 P80 BN80A4**	438
0.81	5923	1.4	1709	45000	**F804_1709 S1 M1LA4**	437	**F804_1709 P80 BN80A4**	438
0.87	5491	0.9	1585	35000	**F704_1585 S1 M1LA4**	434	**F704_1585 P80 BN80A4**	435
0.87	5467	1.5	1578	45000	**F804_1578 S1 M1LA4**	437	**F804_1578 P80 BN80A4**	438
0.93	5134	1.0	1481	35000	**F704_1481 S1 M1LA4**	434	**F704_1481 P80 BN80A4**	435
1.0	4739	1.1	1368	35000	**F704_1368 S1 M1LA4**	434	**F704_1368 P80 BN80A4**	435
1.0	4795	1.7	1384	45000	**F804_1384 S1 M1LA4**	437	**F804_1384 P80 BN80A4**	438
1.1	4427	1.8	1277	45000	**F804_1277 S1 M1LA4**	437	**F804_1277 P80 BN80A4**	438

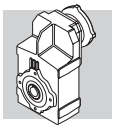

0.55 kW

n_2 min^{-1}	M_2 Nm	S	i	R_{n2} N	IE1		IEC IE1	
1.2	4095	1.2	1182	35000	**F704_1182 S1 M1LA4**	434	**F704_1182 P80 BN80A4**	435
1.2	3972	2.0	1146	45000	**F804_1146 S1 M1LA4**	437	**F804_1146 P80 BN80A4**	438
1.3	3780	1.3	1091	35000	**F704_1091 S1 M1LA4**	434	**F704_1091 P80 BN80A4**	435
1.3	3667	2.2	1058	45000	**F804_1058 S1 M1LA4**	437	**F804_1058 P80 BN80A4**	438
1.4	3323	0.9	958.9	20000	**F604_958.9 S1 M1LA4**	430	**F604_958.9 P80 BN80A4**	431
1.4	3377	1.5	974.4	35000	**F704_974.4 S1 M1LA4**	434	**F704_974.4 P80 BN80A4**	435
1.5	3117	1.6	899.4	35000	**F704_899.4 S1 M1LA4**	434	**F704_899.4 P80 BN80A4**	435
1.5	3109	2.6	897.3	45000	**F804_897.3 S1 M1LA4**	437	**F804_897.3 P80 BN80A4**	438
1.6	3067	0.9	885.1	20000	**F604_885.1 S1 M1LA4**	430	**F604_885.1 P80 BN80A4**	431
1.7	2849	1.8	822.2	35000	**F704_822.2 S1 M1LA4**	434	**F704_822.2 P80 BN80A4**	435
1.8	2684	3.0	774.4	45000	**F804_774.4 S1 M1LA4**	437	**F804_774.4 P80 BN80A4**	438
1.9	2477	3.2	714.9	45000	**F804_714.9 S1 M1LA4**	437	**F804_714.9 P80 BN80A4**	438
2.1	2295	1.3	662.4	20000	**F604_662.4 S1 M1LA4**	430	**F604_662.4 P80 BN80A4**	431
2.1	2278	2.2	657.4	35000	**F704_657.4 S1 M1LA4**	434	**F704_657.4 P80 BN80A4**	435
2.3	2119	1.4	611.4	20000	**F604_611.4 S1 M1LA4**	430	**F604_611.4 P80 BN80A4**	431
2.3	2103	2.4	606.8	35000	**F704_606.8 S1 M1LA4**	434	**F704_606.8 P80 BN80A4**	435
2.6	1838	1.0	530.5	12000	**F514_530.5 S1 M1LA4**	426	**F514_530.5 P80 BN80A4**	427
2.6	1839	1.6	530.7	20000	**F604_530.7 S1 M1LA4**	430	**F604_530.7 P80 BN80A4**	431
2.7	1769	2.8	510.4	35000	**F704_510.4 S1 M1LA4**	434	**F704_510.4 P80 BN80A4**	435
2.8	1698	1.7	489.8	20000	**F604_489.8 S1 M1LA4**	430	**F604_489.8 P80 BN80A4**	431
2.9	1633	3.1	471.2	35000	**F704_471.2 S1 M1LA4**	434	**F704_471.2 P80 BN80A4**	435
3.2	1487	1.2	429.1	12000	**F514_429.1 S1 M1LA4**	426	**F514_429.1 P80 BN80A4**	427
3.2	1499	1.9	432.6	20000	**F604_432.6 S1 M1LA4**	430	**F604_432.6 P80 BN80A4**	431
3.5	1384	2.1	399.3	20000	**F604_399.3 S1 M1LA4**	430	**F604_399.3 P80 BN80A4**	431
3.9	1248	1.4	352.5	12000	**F513_352.5 S1 M1LA4**	426	**F513_352.5 P80 BN80A4**	427
4.0	1221	0.9	344.8	8500	**F413_344.8 S1 M1LA4**	422	**F413_344.8 P80 BN80A4**	423
4.0	1184	2.4	341.7	20000	**F604_341.7 S1 M1LA4**	430	**F604_341.7 P80 BN80A4**	431
4.3	1124	1.6	317.3	12000	**F513_317.3 S1 M1LA4**	426	**F513_317.3 P80 BN80A4**	427
4.4	1093	2.7	315.4	20000	**F604_315.4 S1 M1LA4**	430	**F604_315.4 P80 BN80A4**	431
4.7	1050	1.0	296.6	8500	**F413_296.6 S1 M1LA4**	422	**F413_296.6 P80 BN80A4**	423
4.8	1013	1.8	285.9	12000	**F513_285.9 S1 M1LA4**	426	**F513_285.9 P80 BN80A4**	427
5.2	945	1.2	266.9	8500	**F413_266.9 S1 M1LA4**	422	**F413_266.9 P80 BN80A4**	423
5.3	928	1.9	262.1	12000	**F513_262.1 S1 M1LA4**	426	**F513_262.1 P80 BN80A4**	427
5.7	850	1.3	240.1	8500	**F413_240.1 S1 M1LA4**	422	**F413_240.1 P80 BN80A4**	423
5.8	849	2.1	239.8	12000	**F513_239.8 S1 M1LA4**	426	**F513_239.8 P80 BN80A4**	427
6.3	780	1.4	220.1	8500	**F413_220.1 S1 M1LA4**	422	**F413_220.1 P80 BN80A4**	423
6.4	768	2.3	216.9	12000	**F513_216.9 S1 M1LA4**	426	**F513_216.9 P80 BN80A4**	427
6.8	717	2.5	202.4	12000	**F513_202.4 S1 M1LA4**	426	**F513_202.4 P80 BN80A4**	427
6.9	704	1.6	198.9	8500	**F413_198.9 S1 M1LA4**	422	**F413_198.9 P80 BN80A4**	423
7.4	657	0.9	185.4	6500	**F313_185.4 S1 M1LA4**	418	**F313_185.4 P80 BN80A4**	419
7.6	640	1.7	180.7	8500	**F413_180.7 S1 M1LA4**	422	**F413_180.7 P80 BN80A4**	423
8.2	597	1.8	168.7	8500	**F413_168.7 S1 M1LA4**	422	**F413_168.7 P80 BN80A4**	423
8.3	591	1.0	166.8	6500	**F313_166.8 S1 M1LA4**	418	**F313_166.8 P80 BN80A4**	419
8.3	587	3.1	165.6	12000	**F513_165.6 S1 M1LA4**	426	**F513_165.6 P80 BN80A4**	427
9.2	534	1.1	150.8	6500	**F313_150.8 S1 M1LA4**	418	**F313_150.8 P80 BN80A4**	419
9.8	498	1.2	140.7	6500	**F313_140.7 S1 M1LA4**	418	**F313_140.7 P80 BN80A4**	419
10.3	476	2.3	134.4	8500	**F413_134.4 S1 M1LA4**	422	**F413_134.4 P80 BN80A4**	423
10.7	455	1.3	128.4	6500	**F313_128.4 S1 M1LA4**	418	**F313_128.4 P80 BN80A4**	419
12.2	400	1.0	113.0	6130	**F253_113.0 S1 M1LA4**	414	**F253_113.0 P80 BN80A4**	415
12.3	399	1.5	112.5	6500	**F313_112.5 S1 M1LA4**	418	**F313_112.5 P80 BN80A4**	419
13.0	375	2.9	106.0	8500	**F413_106.0 S1 M1LA4**	422	**F413_106.0 P80 BN80A4**	423
13.1	373	1.1	105.4	6070	**F253_105.4 S1 M1LA4**	414	**F253_105.4 P80 BN80A4**	415
13.5	361	1.7	101.9	6500	**F313_101.9 S1 M1LA4**	418	**F313_101.9 P80 BN80A4**	419
14.5	338	1.2	95.5	5980	**F253_95.5 S1 M1LA4**	414	**F253_95.5 P80 BN80A4**	415
15.8	309	1.9	87.4	6500	**F313_87.4 S1 M1LA4**	418	**F313_87.4 P80 BN80A4**	419
16.5	295	1.4	83.4	5840	**F253_83.4 S1 M1LA4**	414	**F253_83.4 P80 BN80A4**	415
17.5	279	2.1	78.9	6500	**F313_78.9 S1 M1LA4**	418	**F313_78.9 P80 BN80A4**	419
18.0	278	0.9	76.8	4000	**F202_76.8 S1 M1LA4**	410	**F202_76.8 P80 BN80A4**	411
18.0	271	1.5	76.6	5750	**F253_76.6 S1 M1LA4**	414	**F253_76.6 P80 BN80A4**	415
20.0	250	1.0	69.1	3980	**F202_69.1 S1 M1LA4**	410	**F202_69.1 P80 BN80A4**	411
20.0	245	2.5	69.1	6500	**F313_69.1 S1 M1LA4**	418	**F313_69.1 P80 BN80A4**	419
21.1	231	1.7	65.3	5570	**F253_65.3 S1 M1LA4**	414	**F253_65.3 P80 BN80A4**	415
22.1	221	2.7	62.8	6500			**F313_62.8 P80 BN80A4**	419
22.3	224	1.1	61.9	3890	**F202_61.9 S1 M1LA4**	410	**F202_61.9 P80 BN80A4**	411
23.7	207	1.9	58.3	5430	**F253_58.3 S1 M1LA4**	414	**F253_58.3 P80 BN80A4**	415

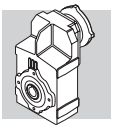

0.55 kW

n_2 min^{-1}	M_2 Nm	S	i	R_{n2} N	IE1		IEC IE1	
24.3	205	1.2	56.7	3810	**F202_56.7 S1 M1LA4**	410	**F202_56.7 P80 BN80A4**	411
26.7	183	3.3	52.1	6500			**F313_52.1 P80 BN80A4**	419
27.2	184	1.4	50.7	3720	**F202_50.7 S1 M1LA4**	410	**F202_50.7 P80 BN80A4**	411
27.2	180	2.2	50.8	5270	**F253_50.8 S1 M1LA4**	414	**F253_50.8 P80 BN80A4**	415
29.2	167	3.5	47.5	6500			**F313_47.5 P80 BN80A4**	419
31	162	1.5	44.8	3610	**F202_44.8 S1 M1LA4**	410	**F202_44.8 P80 BN80A4**	411
31	161	2.4	44.4	5140	**F252_44.4 S1 M1LA4**	414	**F252_44.4 P80 BN80A4**	415
31	160	2.5	45.6	5130			**F253_45.6 P80 BN80A4**	415
33	151	1.7	41.8	3550	**F202_41.8 S1 M1LA4**	410	**F202_41.8 P80 BN80A4**	411
34	147	2.5	40.7	5030	**F252_40.7 S1 M1LA4**	414	**F252_40.7 P80 BN80A4**	415
35	143	1.0	39.6	2800	**F102_39.6 S1 M1LA4**	406	**F102_39.6 P80 BN80A4**	407
36	137	1.8	37.9	3460	**F202_37.9 S1 M1LA4**	410	**F202_37.9 P80 BN80A4**	411
38	132	3.0	36.4	4890	**F252_36.4 S1 M1LA4**	414	**F252_36.4 P80 BN80A4**	415
39	128	1.1	35.3	2800	**F102_35.3 S1 M1LA4**	406	**F102_35.3 P80 BN80A4**	407
42	119	1.2	33.0	2750	**F102_33.0 S1 M1LA4**	406	**F102_33.0 P80 BN80A4**	407
42	120	2.1	33.1	3340	**F202_33.1 S1 M1LA4**	410	**F202_33.1 P80 BN80A4**	411
43	116	3.4	32.2	4730	**F252_32.2 S1 M1LA4**	414	**F252_32.2 P80 BN80A4**	415
45	110	2.3	30.4	3260	**F202_30.4 S1 M1LA4**	410	**F202_30.4 P80 BN80A4**	411
47	107	1.3	29.6	2680	**F102_29.6 S1 M1LA4**	406	**F102_29.6 P80 BN80A4**	407
53	94	2.6	25.9	3130	**F202_25.9 S1 M1LA4**	410	**F202_25.9 P80 BN80A4**	411
54	93	1.5	25.8	2590	**F102_25.8 S1 M1LA4**	406	**F102_25.8 P80 BN80A4**	407
60	83	1.7	22.8	2510	**F102_22.8 S1 M1LA4**	406	**F102_22.8 P80 BN80A4**	407
60	84	2.8	23.1	3030	**F202_23.1 S1 M1LA4**	410	**F202_23.1 P80 BN80A4**	411
68	73	3.1	20.2	2910	**F202_20.2 S1 M1LA4**	410	**F202_20.2 P80 BN80A4**	411
71	70	1.9	19.3	2400	**F102_19.3 S1 M1LA4**	406	**F102_19.3 P80 BN80A4**	407
77	65	3.3	18.1	2820	**F202_18.1 S1 M1LA4**	410	**F202_18.1 P80 BN80A4**	411
81	61	2.1	17.0	2310	**F102_17.0 S1 M1LA4**	406	**F102_17.0 P80 BN80A4**	407
94	53	2.2	14.6	2220	**F102_14.6 S1 M1LA4**	406	**F102_14.6 P80 BN80A4**	407
106	47	2.2	13.0	2140	**F102_13.0 S1 M1LA4**	406	**F102_13.0 P80 BN80A4**	407
120	42	2.3	11.5	2070	**F102_11.5 S1 M1LA4**	406	**F102_11.5 P80 BN80A4**	407
141	35	2.5	9.8	1970	**F102_9.8 S1 M1LA4**	406	**F102_9.8 P80 BN80A4**	407
161	31	2.6	8.6	1890	**F102_8.6 S1 M1LA4**	406	**F102_8.6 P80 BN80A4**	407
186	27	2.8	7.4	1810	**F102_7.4 S1 M1LA4**	406	**F102_7.4 P80 BN80A4**	407
193	26	3.6	14.6	1800	**F102_14.6 S1 M1SD2**	406	**F102_14.6 P71 BN71B2**	407
216	23	3.7	13.0	1730	**F102_13.0 S1 M1SD2**	406	**F102_13.0 P71 BN71B2**	407
244	20	3.8	11.5	1670	**F102_11.5 S1 M1SD2**	406	**F102_11.5 P71 BN71B2**	407
289	17	4.2	9.8	1590	**F102_9.8 S1 M1SD2**	406	**F102_9.8 P71 BN71B2**	407
329	15	4.4	8.6	1530	**F102_8.6 S1 M1SD2**	406	**F102_8.6 P71 BN71B2**	407
381	13	4.8	7.4	1460	**F102_7.4 S1 M1SD2**	406	**F102_7.4 P71 BN71B2**	407

0.75 kW

n_2 min^{-1}	M_2 Nm	S	i	R_{n2} N	IE2	IE3		IEC IE2	IE3	
0.45	14391	1.0	2098.7	55000	**F904_2099 S3 ME3SA6**		440	**F904_2099 P90 BE90S6**		441
0.49	13284	1.1	1937.3	55000	**F904_1937 S3 ME3SA6**		440	**F904_1937 P90 BE90S6**		441
0.55	11673	1.2	1702.3	55000	**F904_1702 S3 ME3SA6**		440	**F904_1702 P90 BE90S6**		441
0.60	10775	1.3	1571.4	55000	**F904_1571 S3 ME3SA6**		440	**F904_1571 P90 BE90S6**		441
0.66	9791	1.4	1427.9	55000	**F904_1428 S3 ME3SA6**		440	**F904_1428 P90 BE90S6**		441
0.68	9444	1.5	2098.7	55000	**F904_2099 S2 ME2SB4**	**F904_2099 S2 MX2SB4**	440	**F904_2099 P80 BE80B4**	**F904_2099 P80 BX80B4**	441
0.72	8941	0.9	1986.8	45000	**F804_1987 S2 ME2SB4**	**F804_1987 S2 MX2SB4**	437	**F804_1987 P80 BE80B4**	**F804_1987 P80 BX80B4**	438
0.74	8718	1.6	1937.3	55000	**F904_1937 S2 ME2SB4**	**F904_1937 S2 MX2SB4**	440	**F904_1937 P80 BE80B4**	**F904_1937 P80 BX80B4**	441
0.78	8253	1.0	1834.0	45000	**F804_1834 S2 ME2SB4**	**F804_1834 S2 MX2SB4**	437	**F804_1834 P80 BE80B4**	**F804_1834 P80 BX80B4**	438
0.84	7691	1.0	1709.1	45000	**F804_1709 S2 ME2SB4**	**F804_1709 S2 MX2SB4**	437	**F804_1709 P80 BE80B4**	**F804_1709 P80 BX80B4**	438
0.84	7660	1.8	1702.3	55000	**F904_1702 S2 ME2SB4**	**F904_1702 S2 MX2SB4**	440	**F904_1702 P80 BE80B4**	**F904_1702 P80 BX80B4**	441
0.91	7099	1.1	1577.6	45000	**F804_1578 S2 ME2SB4**	**F804_1578 S2 MX2SB4**	437	**F804_1578 P80 BE80B4**	**F804_1578 P80 BX80B4**	438
0.91	7071	2.0	1571.4	55000	**F904_1571 S2 ME2SB4**	**F904_1571 S2 MX2SB4**	440	**F904_1571 P80 BE80B4**	**F904_1571 P80 BX80B4**	441
1.0	6426	2.2	1427.9	55000	**F904_1428 S2 ME2SB4**	**F904_1428 S2 MX2SB4**	440	**F904_1428 P80 BE80B4**	**F904_1428 P80 BX80B4**	441
1.0	6227	1.3	1383.8	45000	**F804_1384 S2 ME2SB4**	**F804_1384 S2 MX2SB4**	437	**F804_1384 P80 BE80B4**	**F804_1384 P80 BX80B4**	438

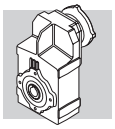

0.75 kW

n_2 min-1	M_2 Nm	S	i	R_{n2} N	IE2	IE3		IEC IE2	IE3	
1.1	5931	2.4	1318.1	55000	**F904_1318 S2 ME2SB4**	**F904_1318 S2 MX2SB4**	440	**F904_1318 P80 BE80B4**	**F904_1318 P80 BX80B4**	441
1.1	5748	1.4	1277.3	45000	**F804_1277 S2 ME2SB4**	**F804_1277 S2 MX2SB4**	437	**F804_1277 P80 BE80B4**	**F804_1277 P80 BX80B4**	438
1.2	5422	2.6	1204.9	55000	**F904_1205 S2 ME2SB4**	**F904_1205 S2 MX2SB4**	440	**F904_1205 P80 BE80B4**	**F904_1205 P80 BX80B4**	441
1.2	5318	0.9	1181.8	35000	**F704_1182 S2 ME2SB4**	**F704_1182 S2 MX2SB4**	434	**F704_1182 P80 BE80B4**	**F704_1182 P80 BX80B4**	435
1.2	5158	1.6	1146.2	45000	**F804_1146 S2 ME2SB4**	**F804_1146 S2 MX2SB4**	437	**F804_1146 P80 BE80B4**	**F804_1146 P80 BX80B4**	438
1.3	5005	2.8	1112.3	55000	**F904_1112 S2 ME2SB4**	**F904_1112 S2 MX2SB4**	440	**F904_1112 P80 BE80B4**	**F904_1112 P80 BX80B4**	441
1.3	4909	1.0	1090.9	35000	**F704_1091 S2 ME2SB4**	**F704_1091 S2 MX2SB4**	434	**F704_1091 P80 BE80B4**	**F704_1091 P80 BX80B4**	435
1.4	4761	1.7	1058.1	45000	**F804_1058 S2 ME2SB4**	**F804_1058 S2 MX2SB4**	437	**F804_1058 P80 BE80B4**	**F804_1058 P80 BX80B4**	438
1.5	4437	3.2	986.0	55000	**F904_986.0 S2 ME2SB4**	**F904_986.0 S2 MX2SB4**	440	**F904_986.0 P80 BE80B4**	**F904_986.0 P80 BX80B4**	441
1.5	4385	1.1	974.4	35000	**F704_974.4 S2 ME2SB4**	**F704_974.4 S2 MX2SB4**	434	**F704_974.4 P80 BE80B4**	**F704_974.4 P80 BX80B4**	435
1.5	4374	1.8	972.0	45000	**F804_972.0 S2 ME2SB4**	**F804_972.0 S2 MX2SB4**	437	**F804_972.0 P80 BE80B4**	**F804_972.0 P80 BX80B4**	438
1.6	4096	3.4	910.2	55000	**F904_910.2 S2 ME2SB4**	**F904_910.2 S2 MX2SB4**	440	**F904_910.2 P80 BE80B4**	**F904_910.2 P80 BX80B4**	441
1.6	4047	1.2	899.4	35000	**F704_899.4 S2 ME2SB4**	**F704_899.4 S2 MX2SB4**	434	**F704_899.4 P80 BE80B4**	**F704_899.4 P80 BX80B4**	435
1.6	4038	2.0	897.3	45000	**F804_897.3 S2 ME2SB4**	**F804_897.3 S2 MX2SB4**	437	**F804_897.3 P80 BE80B4**	**F804_897.3 P80 BX80B4**	438
1.7	3700	1.4	822.2	35000	**F704_822.2 S2 ME2SB4**	**F704_822.2 S2 MX2SB4**	434	**F704_822.2 P80 BE80B4**	**F704_822.2 P80 BX80B4**	435
1.8	3485	2.3	774.4	45000	**F804_774.4 S2 ME2SB4**	**F804_774.4 S2 MX2SB4**	437	**F804_774.4 P80 BE80B4**	**F804_774.4 P80 BX80B4**	438
1.9	3415	1.5	759.0	35000	**F704_759.0 S2 ME2SB4**	**F704_759.0 S2 MX2SB4**	434	**F704_759.0 P80 BE80B4**	**F704_759.0 P80 BX80B4**	435
2.0	3217	2.5	714.9	45000	**F804_714.9 S2 ME2SB4**	**F804_714.9 S2 MX2SB4**	437	**F804_714.9 P80 BE80B4**	**F804_714.9 P80 BX80B4**	438
2.2	2981	1.0	662.4	20000	**F604_662.4 S2 ME2SB4**	**F604_662.4 S2 MX2SB4**	430	**F604_662.4 P80 BE80B4**	**F604_662.4 P80 BX80B4**	431
2.2	2958	1.7	657.4	35000	**F704_657.4 S2 ME2SB4**	**F704_657.4 S2 MX2SB4**	434	**F704_657.4 P80 BE80B4**	**F704_657.4 P80 BX80B4**	435
2.3	2751	1.1	611.4	20000	**F604_611.4 S2 ME2SB4**	**F604_611.4 S2 MX2SB4**	430	**F604_611.4 P80 BE80B4**	**F604_611.4 P80 BX80B4**	431
2.3	2749	2.9	610.9	45000	**F804_610.9 S2 ME2SB4**	**F804_610.9 S2 MX2SB4**	437	**F804_610.9 P80 BE80B4**	**F804_610.9 P80 BX80B4**	438
2.4	2731	1.8	606.8	35000	**F704_606.8 S2 ME2SB4**	**F704_606.8 S2 MX2SB4**	434	**F704_606.8 P80 BE80B4**	**F704_606.8 P80 BX80B4**	435
2.5	2537	3.2	563.9	45000	**F804_563.9 S2 ME2SB4**	**F804_563.9 S2 MX2SB4**	437	**F804_563.9 P80 BE80B4**	**F804_563.9 P80 BX80B4**	438
2.7	2388	1.2	530.7	20000	**F604_530.7 S2 ME2SB4**	**F604_530.7 S2 MX2SB4**	430	**F604_530.7 P80 BE80B4**	**F604_530.7 P80 BX80B4**	431
2.8	2297	2.2	510.4	35000	**F704_510.4 S2 ME2SB4**	**F704_510.4 S2 MX2SB4**	434	**F704_510.4 P80 BE80B4**	**F704_510.4 P80 BX80B4**	435
2.9	2204	1.3	489.8	20000	**F604_489.8 S2 ME2SB4**	**F604_489.8 S2 MX2SB4**	430	**F604_489.8 P80 BE80B4**	**F604_489.8 P80 BX80B4**	431
3.0	2120	2.4	471.2	35000	**F704_471.2 S2 ME2SB4**	**F704_471.2 S2 MX2SB4**	434	**F704_471.2 P80 BE80B4**	**F704_471.2 P80 BX80B4**	435
3.3	1947	1.5	432.6	20000	**F604_432.6 S2 ME2SB4**	**F604_432.6 S2 MX2SB4**	430	**F604_432.6 P80 BE80B4**	**F604_432.6 P80 BX80B4**	431
3.3	1931	0.9	429.1	12000	**F514_429.1 S2 ME2SB4**	**F514_429.1 S2 MX2SB4**	426	**F514_429.1 P80 BE80B4**	**F514_429.1 P80 BX80B4**	427
3.5	1816	2.8	403.5	35000	**F704_403.5 S2 ME2SB4**	**F704_403.5 S2 MX2SB4**	434	**F704_403.5 P80 BE80B4**	**F704_403.5 P80 BX80B4**	435
3.6	1797	1.6	399.3	20000	**F604_399.3 S2 ME2SB4**	**F604_399.3 S2 MX2SB4**	430	**F604_399.3 P80 BE80B4**	**F604_399.3 P80 BX80B4**	431
3.8	1676	3.0	372.5	35000	**F704_372.5 S2 ME2SB4**	**F704_372.5 S2 MX2SB4**	434	**F704_372.5 P80 BE80B4**	**F704_372.5 P80 BX80B4**	435
4.1	1639	1.1	352.5	12000	**F513_352.5 S2 ME2SB4**	**F513_352.5 S2 MX2SB4**	426	**F513_352.5 P80 BE80B4**	**F513_352.5 P80 BX80B4**	427
4.2	1538	1.9	341.7	20000	**F604_341.7 S2 ME2SB4**	**F604_341.7 S2 MX2SB4**	430	**F604_341.7 P80 BE80B4**	**F604_341.7 P80 BX80B4**	431
4.5	1475	1.2	317.3	12000	**F513_317.3 S2 ME2SB4**	**F513_317.3 S2 MX2SB4**	426	**F513_317.3 P80 BE80B4**	**F513_317.3 P80 BX80B4**	427
4.5	1419	2.0	315.4	20000	**F604_315.4 S2 ME2SB4**	**F604_315.4 S2 MX2SB4**	430	**F604_315.4 P80 BE80B4**	**F604_315.4 P80 BX80B4**	431
4.7	1370	3.7	304.3	35000	**F704_304.3 S2 ME2SB4**	**F704_304.3 S2 MX2SB4**	434	**F704_304.3 P80 BE80B4**	**F704_304.3 P80 BX80B4**	435
5.0	1330	1.4	285.9	12000	**F513_285.9 S2 ME2SB4**	**F513_285.9 S2 MX2SB4**	426	**F513_285.9 P80 BE80B4**	**F513_285.9 P80 BX80B4**	427
5.1	1305	2.2	280.7	20000	**F603_280.7 S2 ME2SB4**	**F603_280.7 S2 MX2SB4**	430	**F603_280.7 P80 BE80B4**	**F603_280.7 P80 BX80B4**	431
5.5	1219	1.5	262.1	12000	**F513_262.1 S2 ME2SB4**	**F513_262.1 S2 MX2SB4**	426	**F513_262.1 P80 BE80B4**	**F513_262.1 P80 BX80B4**	427
5.5	1205	2.4	259.1	20000	**F603_259.1 S2 ME2SB4**	**F603_259.1 S2 MX2SB4**	430	**F603_259.1 P80 BE80B4**	**F603_259.1 P80 BX80B4**	431
6.0	1117	1.0	240.1	8500	**F413_240.1 S2 ME2SB4**	**F413_240.1 S2 MX2SB4**	422	**F413_240.1 P80 BE80B4**	**F413_240.1 P80 BX80B4**	423
6.0	1115	1.6	239.8	12000	**F513_239.8 S2 ME2SB4**	**F513_239.8 S2 MX2SB4**	426	**F513_239.8 P80 BE80B4**	**F513_239.8 P80 BX80B4**	427
6.1	1096	2.6	235.8	20000	**F603_235.8 S2 ME2SB4**	**F603_235.8 S2 MX2SB4**	430	**F603_235.8 P80 BE80B4**	**F603_235.8 P80 BX80B4**	431
6.5	1024	1.1	220.1	8500	**F413_220.1 S2 ME2SB4**	**F413_220.1 S2 MX2SB4**	422	**F413_220.1 P80 BE80B4**	**F413_220.1 P80 BX80B4**	423
6.6	1012	2.9	217.6	20000	**F603_217.6 S2 ME2SB4**	**F603_217.6 S2 MX2SB4**	430	**F603_217.6 P80 BE80B4**	**F603_217.6 P80 BX80B4**	431
6.6	1008	1.8	216.9	12000	**F513_216.9 S2 ME2SB4**	**F513_216.9 S2 MX2SB4**	426	**F513_216.9 P80 BE80B4**	**F513_216.9 P80 BX80B4**	427
7.1	941	1.9	202.4	12000	**F513_202.4 S2 ME2SB4**	**F513_202.4 S2 MX2SB4**	426	**F513_202.4 P80 BE80B4**	**F513_202.4 P80 BX80B4**	427
7.1	936	3.1	201.4	20000	**F603_201.4 S2 ME2SB4**	**F603_201.4 S2 MX2SB4**	430	**F603_201.4 P80 BE80B4**	**F603_201.4 P80 BX80B4**	431
7.2	925	1.2	198.9	8500	**F413_198.9 S2 ME2SB4**	**F413_198.9 S2 MX2SB4**	422	**F413_198.9 P80 BE80B4**	**F413_198.9 P80 BX80B4**	423
7.7	864	3.4	185.9	20000	**F603_185.9 S2 ME2SB4**	**F603_185.9 S2 MX2SB4**	430	**F603_185.9 P80 BE80B4**	**F603_185.9 P80 BX80B4**	431
7.9	840	1.3	180.7	8500	**F413_180.7 S2 ME2SB4**	**F413_180.7 S2 MX2SB4**	422	**F413_180.7 P80 BE80B4**	**F413_180.7 P80 BX80B4**	423
8.5	784	1.4	168.7	8500	**F413_168.7 S2 ME2SB4**	**F413_168.7 S2 MX2SB4**	422	**F413_168.7 P80 BE80B4**	**F413_168.7 P80 BX80B4**	423
8.6	770	2.3	165.6	12000	**F513_165.6 S2 ME2SB4**	**F513_165.6 S2 MX2SB4**	426	**F513_165.6 P80 BE80B4**	**F513_165.6 P80 BX80B4**	427
8.8	757	3.8	162.9	20000	**F603_162.9 S2 ME2SB4**	**F603_162.9 S2 MX2SB4**	430	**F603_162.9 P80 BE80B4**	**F603_162.9 P80 BX80B4**	431
10.2	654	0.9	140.7	6500	**F313_140.7 S2 ME2SB4**	**F313_140.7 S2 MX2SB4**	418	**F313_140.7 P80 BE80B4**	**F313_140.7 P80 BX80B4**	419
10.6	625	1.8	134.4	8500	**F413_134.4 S2 ME2SB4**	**F413_134.4 S2 MX2SB4**	422	**F413_134.4 P80 BE80B4**	**F413_134.4 P80 BX80B4**	423
11.0	604	3.0	129.9	12000	**F513_129.9 S2 ME2SB4**	**F513_129.9 S2 MX2SB4**	426	**F513_129.9 P80 BE80B4**	**F513_129.9 P80 BX80B4**	427
11.1	597	1.0	128.4	6500	**F313_128.4 S2 ME2SB4**	**F313_128.4 S2 MX2SB4**	418	**F313_128.4 P80 BE80B4**	**F313_128.4 P80 BX80B4**	419

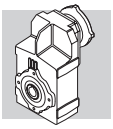

0.75 kW

n_2 min-1	M_2 Nm	S	i	R_{n2} N	IE2	IE3		IEC IE2	IEC IE3	
12.7	523	1.1	112.5	6500	**F313_112.5 S2 ME2SB4**	**F313_112.5 S2 MX2SB4**	418	**F313_112.5 P80 BE80B4**	**F313_112.5 P80 BX80B4**	419
13.5	493	2.2	106.0	8500	**F413_106.0 S2 ME2SB4**	**F413_106.0 S2 MX2SB4**	422	**F413_106.0 P80 BE80B4**	**F413_106.0 P80 BX80B4**	423
14.0	474	1.3	101.9	6500	**F313_101.9 S2 ME2SB4**	**F313_101.9 S2 MX2SB4**	418	**F313_101.9 P80 BE80B4**	**F313_101.9 P80 BX80B4**	419
15.0	444	0.9	95.5	5450	**F253_95.5 S2 ME2SB4**	**F253_95.5 S2 MX2SB4**	414	**F253_95.5 P80 BE80B4**	**F253_95.5 P80 BX80B4**	415
16.4	406	1.5	87.4	6500	**F313_87.4 S2 ME2SB4**	**F313_87.4 S2 MX2SB4**	418	**F313_87.4 P80 BE80B4**	**F313_87.4 P80 BX80B4**	419
16.8	395	2.8	84.9	8500	**F413_84.9 S2 ME2SB4**	**F413_84.9 S2 MX2SB4**	422	**F413_84.9 P80 BE80B4**	**F413_84.9 P80 BX80B4**	423
17.1	388	1.0	83.4	5350	**F253_83.4 S2 ME2SB4**	**F253_83.4 S2 MX2SB4**	414	**F253_83.4 P80 BE80B4**	**F253_83.4 P80 BX80B4**	415
18.1	367	1.6	78.9	6500	**F313_78.9 S2 ME2SB4**	**F313_78.9 S2 MX2SB4**	418	**F313_78.9 P80 BE80B4**	**F313_78.9 P80 BX80B4**	419
18.7	356	1.1	76.6	5300	**F253_76.6 S2 ME2SB4**	**F253_76.6 S2 MX2SB4**	414	**F253_76.6 P80 BE80B4**	**F253_76.6 P80 BX80B4**	415
20.7	321	1.9	69.1	6500	**F313_69.1 S2 ME2SB4**	**F313_69.1 S2 MX2SB4**	418	**F313_69.1 P80 BE80B4**	**F313_69.1 P80 BX80B4**	419
21.5	309	3.6	66.5	8500	**F413_66.5 S2 ME2SB4**	**F413_66.5 S2 MX2SB4**	422	**F413_66.5 P80 BE80B4**	**F413_66.5 P80 BX80B4**	423
21.9	304	1.3	65.3	5180	**F253_65.3 S2 ME2SB4**	**F253_65.3 S2 MX2SB4**	414	**F253_65.3 P80 BE80B4**	**F253_65.3 P80 BX80B4**	415
22.8	292	2.1	62.8	6500	**F313_62.8 S2 ME2SB4**	**F313_62.8 S2 MX2SB4**	418	**F313_62.8 P80 BE80B4**	**F313_62.8 P80 BX80B4**	419
24.5	271	1.5	58.3	5080	**F253_58.3 S2 ME2SB4**	**F253_58.3 S2 MX2SB4**	414	**F253_58.3 P80 BE80B4**	**F253_58.3 P80 BX80B4**	415
25.2	269	0.9	56.7	3590	**F202_56.7 S2 ME2SB4**	**F202_56.7 S2 MX2SB4**	410	**F202_56.7 P80 BE80B4**	**F202_56.7 P80 BX80B4**	411
27.5	242	2.5	52.1	6500	**F313_52.1 S2 ME2SB4**	**F313_52.1 S2 MX2SB4**	418	**F313_52.1 P80 BE80B4**	**F313_52.1 P80 BX80B4**	419
28.2	236	1.7	50.8	4960	**F253_50.8 S2 ME2SB4**	**F253_50.8 S2 MX2SB4**	414	**F253_50.8 P80 BE80B4**	**F253_50.8 P80 BX80B4**	415
28.2	241	1.0	50.7	3510	**F202_50.7 S2 ME2SB4**	**F202_50.7 S2 MX2SB4**	410	**F202_50.7 P80 BE80B4**	**F202_50.7 P80 BX80B4**	411
30	221	2.6	47.5	6500	**F313_47.5 S2 ME2SB4**	**F313_47.5 S2 MX2SB4**	418	**F313_47.5 P80 BE80B4**	**F313_47.5 P80 BX80B4**	419
31	212	1.9	45.6	4860	**F253_45.6 S2 ME2SB4**	**F253_45.6 S2 MX2SB4**	414	**F253_45.6 P80 BE80B4**	**F253_45.6 P80 BX80B4**	415
32	213	1.2	44.8	3420	**F202_44.8 S2 ME2SB4**	**F202_44.8 S2 MX2SB4**	410	**F202_44.8 P80 BE80B4**	**F202_44.8 P80 BX80B4**	411
32	212	2.8	44.6	6500	**F312_44.6 S2 ME2SB4**	**F312_44.6 S2 MX2SB4**	418	**F312_44.6 P80 BE80B4**	**F312_44.6 P80 BX80B4**	419
32	211	1.8	44.4	4890	**F252_44.4 S2 ME2SB4**	**F252_44.4 S2 MX2SB4**	414	**F252_44.4 P80 BE80B4**	**F252_44.4 P80 BX80B4**	415
34	199	1.3	41.8	3370	**F202_41.8 S2 ME2SB4**	**F202_41.8 S2 MX2SB4**	410	**F202_41.8 P80 BE80B4**	**F202_41.8 P80 BX80B4**	411
35	193	1.9	40.7	4790	**F252_40.7 S2 ME2SB4**	**F252_40.7 S2 MX2SB4**	414	**F252_40.7 P80 BE80B4**	**F252_40.7 P80 BX80B4**	415
35	192	3.1	40.4	6500	**F312_40.4 S2 ME2SB4**	**F312_40.4 S2 MX2SB4**	418	**F312_40.4 P80 BE80B4**	**F312_40.4 P80 BX80B4**	419
38	180	1.4	37.9	3300	**F202_37.9 S2 ME2SB4**	**F202_37.9 S2 MX2SB4**	410	**F202_37.9 P80 BE80B4**	**F202_37.9 P80 BX80B4**	411
38	179	3.4	37.7	6500	**F312_37.7 S2 ME2SB4**	**F312_37.7 S2 MX2SB4**	418	**F312_37.7 P80 BE80B4**	**F312_37.7 P80 BX80B4**	419
39	173	2.3	36.4	4680	**F252_36.4 S2 ME2SB4**	**F252_36.4 S2 MX2SB4**	414	**F252_36.4 P80 BE80B4**	**F252_36.4 P80 BX80B4**	415
43	157	1.6	33.1	3200	**F202_33.1 S2 ME2SB4**	**F202_33.1 S2 MX2SB4**	410	**F202_33.1 P80 BE80B4**	**F202_33.1 P80 BX80B4**	411
44	153	2.6	32.2	4540	**F252_32.2 S2 ME2SB4**	**F252_32.2 S2 MX2SB4**	414	**F252_32.2 P80 BE80B4**	**F252_32.2 P80 BX80B4**	415
47	144	1.7	30.4	3140	**F202_30.4 S2 ME2SB4**	**F202_30.4 S2 MX2SB4**	410	**F202_30.4 P80 BE80B4**	**F202_30.4 P80 BX80B4**	411
48	143	2.8	30.0	4470	**F252_30.0 S2 ME2SB4**	**F252_30.0 S2 MX2SB4**	414	**F252_30.0 P80 BE80B4**	**F252_30.0 P80 BX80B4**	415
48	141	1.0	29.6	2550	**F102_29.6 S2 ME2SB4**	**F102_29.6 S2 MX2SB4**	406	**F102_29.6 P80 BE80B4**	**F102_29.6 P80 BX80B4**	407
53	129	3.1	27.2	4360	**F252_27.2 S2 ME2SB4**	**F252_27.2 S2 MX2SB4**	414	**F252_27.2 P80 BE80B4**	**F252_27.2 P80 BX80B4**	415
55	123	1.9	25.9	3020	**F202_25.9 S2 ME2SB4**	**F202_25.9 S2 MX2SB4**	410	**F202_25.9 P80 BE80B4**	**F202_25.9 P80 BX80B4**	411
55	122	1.1	25.8	2470	**F102_25.8 S2 ME2SB4**	**F102_25.8 S2 MX2SB4**	406	**F102_25.8 P80 BE80B4**	**F102_25.8 P80 BX80B4**	407
60	113	3.5	23.8	4210	**F252_23.8 S2 ME2SB4**	**F252_23.8 S2 MX2SB4**	414	**F252_23.8 P80 BE80B4**	**F252_23.8 P80 BX80B4**	415
62	110	2.1	23.1	2930	**F202_23.1 S2 ME2SB4**	**F202_23.1 S2 MX2SB4**	410	**F202_23.1 P80 BE80B4**	**F202_23.1 P80 BX80B4**	411
63	108	1.3	22.8	2400	**F102_22.8 S2 ME2SB4**	**F102_22.8 S2 MX2SB4**	406	**F102_22.8 P80 BE80B4**	**F102_22.8 P80 BX80B4**	407
71	96	2.3	20.2	2830	**F202_20.2 S2 ME2SB4**	**F202_20.2 S2 MX2SB4**	410	**F202_20.2 P80 BE80B4**	**F202_20.2 P80 BX80B4**	411
74	92	1.5	19.3	2310	**F102_19.3 S2 ME2SB4**	**F102_19.3 S2 MX2SB4**	406	**F102_19.3 P80 BE80B4**	**F102_19.3 P80 BX80B4**	407
79	86	2.5	18.1	2740	**F202_18.1 S2 ME2SB4**	**F202_18.1 S2 MX2SB4**	410	**F202_18.1 P80 BE80B4**	**F202_18.1 P80 BX80B4**	411
84	81	1.6	17.0	2230	**F102_17.0 S2 ME2SB4**	**F102_17.0 S2 MX2SB4**	406	**F102_17.0 P80 BE80B4**	**F102_17.0 P80 BX80B4**	407
97	70	2.9	14.8	2600	**F202_14.8 S2 ME2SB4**	**F202_14.8 S2 MX2SB4**	410	**F202_14.8 P80 BE80B4**	**F202_14.8 P80 BX80B4**	411
98	70	1.7	14.6	2150	**F102_14.6 S2 ME2SB4**	**F102_14.6 S2 MX2SB4**	406	**F102_14.6 P80 BE80B4**	**F102_14.6 P80 BX80B4**	407
110	62	1.7	13.0	2070	**F102_13.0 S2 ME2SB4**	**F102_13.0 S2 MX2SB4**	406	**F102_13.0 P80 BE80B4**	**F102_13.0 P80 BX80B4**	407
124	55	1.8	11.5	2010	**F102_11.5 S2 ME2SB4**	**F102_11.5 S2 MX2SB4**	406	**F102_11.5 P80 BE80B4**	**F102_11.5 P80 BX80B4**	407
146	46	1.9	9.8	1920	**F102_9.8 S2 ME2SB4**	**F102_9.8 S2 MX2SB4**	406	**F102_9.8 P80 BE80B4**	**F102_9.8 P80 BX80B4**	407
167	41	2.0	8.6	1850	**F102_8.6 S2 ME2SB4**	**F102_8.6 S2 MX2SB4**	406	**F102_8.6 P80 BE80B4**	**F102_8.6 P80 BX80B4**	407
193	35	2.2	7.4	1770	**F102_7.4 S2 ME2SB4**	**F102_7.4 S2 MX2SB4**	406	**F102_7.4 P80 BE80B4**	**F102_7.4 P80 BX80B4**	407
195	35	2.7	14.6	1770	**F102_14.6 S2 ME2SA2**		406	**F102_14.6 P80 BE80A2**		407
219	31	2.7	13.0	1710	**F102_13.0 S2 ME2SA2**		406	**F102_13.0 P80 BE80A2**		407
247	28	2.8	11.5	1650	**F102_11.5 S2 ME2SA2**		406	**F102_11.5 P80 BE80A2**		407
292	23	3.1	9.8	1570	**F102_9.8 S2 ME2SA2**		406	**F102_9.8 P80 BE80A2**		407
332	20.5	3.2	8.6	1510	**F102_8.6 S2 ME2SA2**		406	**F102_8.6 P80 BE80A2**		407
385	17.7	3.6	7.4	1440	**F102_7.4 S2 ME2SA2**		406	**F102_7.4 P80 BE80A2**		407

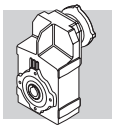

1.1 kW

n_2 min^{-1}	M_2 Nm	S	i	R_{n2} N	IE2	IE3		IEC IE2	IEC IE3	
0.60	15694	0.9	1571.4	55000	**F904_1571 S3 ME3LA6**		440	**F904_1571 P100 BE100M6**		441
0.66	14285	1.0	1427.9	55000	**F904_1428 S3 ME3LA6**		440	**F904_1428 P100 BE100M6**		441
0.68	13977	1.0	2098.7	55000	**F904_2099 S3 ME3SA4**	**F904_2099 S3 MX3SA4**	440	**F904_2099 P90 BE90S4**	**F904_2099 P90 BX90S4**	441
0.74	12902	1.1	1937.3	55000	**F904_1937 S3 ME3SA4**	**F904_1937 S3 MX3SA4**	440	**F904_1937 P90 BE90S4**	**F904_1937 P90 BX90S4**	441
0.84	11337	1.2	1702.3	55000	**F904_1702 S3 ME3SA4**	**F904_1702 S3 MX3SA4**	440	**F904_1702 P90 BE90S4**	**F904_1702 P90 BX90S4**	441
0.91	10465	1.3	1571.4	55000	**F904_1571 S3 ME3SA4**	**F904_1571 S3 MX3SA4**	440	**F904_1571 P90 BE90S4**	**F904_1571 P90 BX90S4**	441
1.0	9510	1.5	1427.9	55000	**F904_1428 S3 ME3SA4**	**F904_1428 S3 MX3SA4**	440	**F904_1428 P90 BE90S4**	**F904_1428 P90 BX90S4**	441
1.1	8778	1.6	1318.1	55000	**F904_1318 S3 ME3SA4**	**F904_1318 S3 MX3SA4**	440	**F904_1318 P90 BE90S4**	**F904_1318 P90 BX90S4**	441
1.1	8507	0.9	1277.3	45000	**F804_1277 S3 ME3SA4**	**F804_1277 S3 MX3SA4**	437	**F804_1277 P90 BE90S4**	**F804_1277 P90 BX90S4**	438
1.2	8025	1.7	1204.9	55000	**F904_1205 S3 ME3SA4**	**F904_1205 S3 MX3SA4**	440	**F904_1205 P90 BE90S4**	**F904_1205 P90 BX90S4**	441
1.2	7634	1.0	1146.2	45000	**F804_1146 S3 ME3SA4**	**F804_1146 S3 MX3SA4**	437	**F804_1146 P90 BE90S4**	**F804_1146 P90 BX90S4**	438
1.3	7408	1.9	1112.3	55000	**F904_1112 S3 ME3SA4**	**F904_1112 S3 MX3SA4**	440	**F904_1112 P90 BE90S4**	**F904_1112 P90 BX90S4**	441
1.4	7047	1.1	1058.1	45000	**F804_1058 S3 ME3SA4**	**F804_1058 S3 MX3SA4**	437	**F804_1058 P90 BE90S4**	**F804_1058 P90 BX90S4**	438
1.5	6567	2.1	986.0	55000	**F904_986.0 S3 ME3SA4**	**F904_986.0 S3 MX3SA4**	440	**F904_986.0 P90 BE90S4**	**F904_986.0 P90 BX90S4**	441
1.5	6474	1.2	972.0	45000	**F804_972.0 S3 ME3SA4**	**F804_972.0 S3 MX3SA4**	437	**F804_972.0 P90 BE90S4**	**F804_972.0 P90 BX90S4**	438
1.6	6062	2.3	910.2	55000	**F904_910.2 S3 ME3SA4**	**F904_910.2 S3 MX3SA4**	440	**F904_910.2 P90 BE90S4**	**F904_910.2 P90 BX90S4**	441
1.6	5976	1.3	897.3	45000	**F804_897.3 S3 ME3SA4**	**F804_897.3 S3 MX3SA4**	437	**F804_897.3 P90 BE90S4**	**F804_897.3 P90 BX90S4**	438
1.7	5476	0.9	822.2	35000	**F704_822.2 S3 ME3SA4**	**F704_822.2 S3 MX3SA4**	434	**F704_822.2 P90 BE90S4**	**F704_822.2 P90 BX90S4**	435
1.8	5158	1.6	774.4	45000	**F804_774.4 S3 ME3SA4**	**F804_774.4 S3 MX3SA4**	437	**F804_774.4 P90 BE90S4**	**F804_774.4 P90 BX90S4**	438
1.8	5151	2.7	773.4	55000	**F904_773.4 S3 ME3SA4**	**F904_773.4 S3 MX3SA4**	440	**F904_773.4 P90 BE90S4**	**F904_773.4 P90 BX90S4**	441
1.9	5055	1.0	759.0	35000	**F704_759.0 S3 ME3SA4**	**F704_759.0 S3 MX3SA4**	434	**F704_759.0 P90 BE90S4**	**F704_759.0 P90 BX90S4**	435
1.9	4893	1.6	489.1	45000	**F804_489.1 S3 ME3LA6**		437	**F804_489.1 P100 BE100M6**		438
2.0	4761	1.7	714.9	45000	**F804_714.9 S3 ME3SA4**	**F804_714.9 S3 MX3SA4**	437	**F804_714.9 P90 BE90S4**	**F804_714.9 P90 BX90S4**	438
2.0	4755	2.9	714.0	55000	**F904_714.0 S3 ME3SA4**	**F904_714.0 S3 MX3SA4**	440	**F904_714.0 P90 BE90S4**	**F904_714.0 P90 BX90S4**	441
2.1	4517	1.8	451.5	45000	**F804_451.5 S3 ME3LA6**		437	**F804_451.5 P100 BE100M6**		438
2.2	4378	1.1	657.4	35000	**F704_657.4 S3 ME3SA4**	**F704_657.4 S3 MX3SA4**	434	**F704_657.4 P90 BE90S4**	**F704_657.4 P90 BX90S4**	435
2.3	4167	3.4	625.6	55000	**F904_625.6 S3 ME3SA4**	**F904_625.6 S3 MX3SA4**	440	**F904_625.6 P90 BE90S4**	**F904_625.6 P90 BX90S4**	441
2.3	4068	2.0	610.9	45000	**F804_610.9 S3 ME3SA4**	**F804_610.9 S3 MX3SA4**	437	**F804_610.9 P90 BE90S4**	**F804_610.9 P90 BX90S4**	438
2.4	4042	1.2	606.8	35000	**F704_606.8 S3 ME3SA4**	**F704_606.8 S3 MX3SA4**	434	**F704_606.8 P90 BE90S4**	**F704_606.8 P90 BX90S4**	435
2.5	3846	3.6	577.5	55000	**F904_577.5 S3 ME3SA4**	**F904_577.5 S3 MX3SA4**	440	**F904_577.5 P90 BE90S4**	**F904_577.5 P90 BX90S4**	441
2.5	3755	2.1	563.9	45000	**F804_563.9 S3 ME3SA4**	**F804_563.9 S3 MX3SA4**	437	**F804_563.9 P90 BE90S4**	**F804_563.9 P90 BX90S4**	438
2.8	3399	1.5	510.4	35000	**F704_510.4 S3 ME3SA4**	**F704_510.4 S3 MX3SA4**	434	**F704_510.4 P90 BE90S4**	**F704_510.4 P90 BX90S4**	435
2.9	3262	0.9	489.8	20000	**F604_489.8 S3 ME3SA4**	**F604_489.8 S3 MX3SA4**	430	**F604_489.8 P90 BE90S4**	**F604_489.8 P90 BX90S4**	431
2.9	3258	2.5	489.1	45000	**F804_489.1 S3 ME3SA4**	**F804_489.1 S3 MX3SA4**	437	**F804_489.1 P90 BE90S4**	**F804_489.1 P90 BX90S4**	438
3.0	3138	1.6	471.2	35000	**F704_471.2 S3 ME3SA4**	**F704_471.2 S3 MX3SA4**	434	**F704_471.2 P90 BE90S4**	**F704_471.2 P90 BX90S4**	435
3.2	3007	2.7	451.5	45000	**F804_451.5 S3 ME3SA4**	**F804_451.5 S3 MX3SA4**	437	**F804_451.5 P90 BE90S4**	**F804_451.5 P90 BX90S4**	438
3.3	2881	1.0	432.6	20000	**F604_432.6 S3 ME3SA4**	**F604_432.6 S3 MX3SA4**	430	**F604_432.6 P90 BE90S4**	**F604_432.6 P90 BX90S4**	431
3.5	2687	1.9	403.5	35000	**F704_403.5 S3 ME3SA4**	**F704_403.5 S3 MX3SA4**	434	**F704_403.5 P90 BE90S4**	**F704_403.5 P90 BX90S4**	435
3.6	2660	1.1	399.3	20000	**F604_399.3 S3 ME3SA4**	**F604_399.3 S3 MX3SA4**	430	**F604_399.3 P90 BE90S4**	**F604_399.3 P90 BX90S4**	431
3.7	2552	3.1	383.2	45000	**F804_383.2 S3 ME3SA4**	**F804_383.2 S3 MX3SA4**	437	**F804_383.2 P90 BE90S4**	**F804_383.2 P90 BX90S4**	438
3.8	2481	2.0	372.5	35000	**F704_372.5 S3 ME3SA4**	**F704_372.5 S3 MX3SA4**	434	**F704_372.5 P90 BE90S4**	**F704_372.5 P90 BX90S4**	435
4.0	2356	3.4	353.7	45000	**F804_353.7 S3 ME3SA4**	**F804_353.7 S3 MX3SA4**	437	**F804_353.7 P90 BE90S4**	**F804_353.7 P90 BX90S4**	438
4.2	2276	1.3	341.7	20000	**F604_341.7 S3 ME3SA4**	**F604_341.7 S3 MX3SA4**	430	**F604_341.7 P90 BE90S4**	**F604_341.7 P90 BX90S4**	431
4.5	2100	1.4	315.4	20000	**F604_315.4 S3 ME3SA4**	**F604_315.4 S3 MX3SA4**	430	**F604_315.4 P90 BE90S4**	**F604_315.4 P90 BX90S4**	431
4.7	2027	2.5	304.3	35000	**F704_304.3 S3 ME3SA4**	**F704_304.3 S3 MX3SA4**	434	**F704_304.3 P90 BE90S4**	**F704_304.3 P90 BX90S4**	435
5.0	1968	0.9	285.9	12000	**F513_285.9 S3 ME3SA4**	**F513_285.9 S3 MX3SA4**	426	**F513_285.9 P90 BE90S4**	**F513_285.9 P90 BX90S4**	427
5.1	1871	2.7	280.9	35000	**F704_280.9 S3 ME3SA4**	**F704_280.9 S3 MX3SA4**	434	**F704_280.9 P90 BE90S4**	**F704_280.9 P90 BX90S4**	435
5.1	1932	1.5	280.7	20000	**F603_280.7 S3 ME3SA4**	**F603_280.7 S3 MX3SA4**	430	**F603_280.7 P90 BE90S4**	**F603_280.7 P90 BX90S4**	431
5.5	1804	1.0	262.1	12000	**F513_262.1 S3 ME3SA4**	**F513_262.1 S3 MX3SA4**	426	**F513_262.1 P90 BE90S4**	**F513_262.1 P90 BX90S4**	427
5.5	1783	1.6	259.1	20000	**F603_259.1 S3 ME3SA4**	**F603_259.1 S3 MX3SA4**	430	**F603_259.1 P90 BE90S4**	**F603_259.1 P90 BX90S4**	431
6.0	1651	1.1	239.8	12000	**F513_239.8 S3 ME3SA4**	**F513_239.8 S3 MX3SA4**	426	**F513_239.8 P90 BE90S4**	**F513_239.8 P90 BX90S4**	427
6.1	1623	1.8	235.8	20000	**F603_235.8 S3 ME3SA4**	**F603_235.8 S3 MX3SA4**	430	**F603_235.8 P90 BE90S4**	**F603_235.8 P90 BX90S4**	431
6.1	1562	3.2	234.6	35000	**F704_234.6 S3 ME3SA4**	**F704_234.6 S3 MX3SA4**	434	**F704_234.6 P90 BE90S4**	**F704_234.6 P90 BX90S4**	435
6.6	1498	1.9	217.6	20000	**F603_217.6 S3 ME3SA4**	**F603_217.6 S3 MX3SA4**	430	**F603_217.6 P90 BE90S4**	**F603_217.6 P90 BX90S4**	431
6.6	1492	1.2	216.9	12000	**F513_216.9 S3 ME3SA4**	**F513_216.9 S3 MX3SA4**	426	**F513_216.9 P90 BE90S4**	**F513_216.9 P90 BX90S4**	427
6.6	1442	3.5	216.5	35000	**F704_216.5 S3 ME3SA4**	**F704_216.5 S3 MX3SA4**	434	**F704_216.5 P90 BE90S4**	**F704_216.5 P90 BX90S4**	435
7.1	1393	1.3	202.4	12000	**F513_202.4 S3 ME3SA4**	**F513_202.4 S3 MX3SA4**	426	**F513_202.4 P90 BE90S4**	**F513_202.4 P90 BX90S4**	427

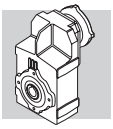

1.1 kW

n_2 min-1	M_2 Nm	S	i	R_{n2} N	IE2	IE3		IEC IE2	IEC IE3	
7.1	1386	2.1	201.4	20000	**F603_201.4 S3 ME3SA4**	**F603_201.4 S3 MX3SA4**	430	**F603_201.4 P90 BE90S4**	**F603_201.4 P90 BX90S4**	431
7.7	1279	2.3	185.9	20000	**F603_185.9 S3 ME3SA4**	**F603_185.9 S3 MX3SA4**	430	**F603_185.9 P90 BE90S4**	**F603_185.9 P90 BX90S4**	431
7.9	1244	0.9	180.7	8500	**F413_180.7 S3 ME3SA4**	**F413_180.7 S3 MX3SA4**	422	**F413_180.7 P90 BE90S4**	**F413_180.7 P90 BX90S4**	423
8.5	1161	0.9	168.7	8500	**F413_168.7 S3 ME3SA4**	**F413_168.7 S3 MX3SA4**	422	**F413_168.7 P90 BE90S4**	**F413_168.7 P90 BX90S4**	423
8.6	1140	1.6	165.6	12000	**F513_165.6 S3 ME3SA4**	**F513_165.6 S3 MX3SA4**	426	**F513_165.6 P90 BE90S4**	**F513_165.6 P90 BX90S4**	427
8.8	1121	2.6	162.9	20000	**F603_162.9 S3 ME3SA4**	**F603_162.9 S3 MX3SA4**	430	**F603_162.9 P90 BE90S4**	**F603_162.9 P90 BX90S4**	431
9.5	1035	2.8	150.4	20000	**F603_150.4 S3 ME3SA4**	**F603_150.4 S3 MX3SA4**	430	**F603_150.4 P90 BE90S4**	**F603_150.4 P90 BX90S4**	431
10.6	925	1.2	134.4	8500	**F413_134.4 S3 ME3SA4**	**F413_134.4 S3 MX3SA4**	422	**F413_134.4 P90 BE90S4**	**F413_134.4 P90 BX90S4**	423
11.0	894	2.0	129.9	12000	**F513_129.9 S3 ME3SA4**	**F513_129.9 S3 MX3SA4**	426	**F513_129.9 P90 BE90S4**	**F513_129.9 P90 BX90S4**	427
13.5	730	1.5	106.0	8500	**F413_106.0 S3 ME3SA4**	**F413_106.0 S3 MX3SA4**	422	**F413_106.0 P90 BE90S4**	**F413_106.0 P90 BX90S4**	423
13.6	723	2.5	105.1	12000	**F513_105.1 S3 ME3SA4**	**F513_105.1 S3 MX3SA4**	426	**F513_105.1 P90 BE90S4**	**F513_105.1 P90 BX90S4**	427
16.4	601	1.0	87.4	6500	**F313_87.4 S3 ME3SA4**	**F313_87.4 S3 MX3SA4**	418	**F313_87.4 P90 BE90S4**	**F313_87.4 P90 BX90S4**	419
16.8	584	1.9	84.9	8500	**F413_84.9 S3 ME3SA4**	**F413_84.9 S3 MX3SA4**	422	**F413_84.9 P90 BE90S4**	**F413_84.9 P90 BX90S4**	423
17.2	573	3.1	83.2	12000	**F513_83.2 S3 ME3SA4**	**F513_83.2 S3 MX3SA4**	426	**F513_83.2 P90 BE90S4**	**F513_83.2 P90 BX90S4**	427
18.1	543	1.1	78.9	6500	**F313_78.9 S3 ME3SA4**	**F313_78.9 S3 MX3SA4**	418	**F313_78.9 P90 BE90S4**	**F313_78.9 P90 BX90S4**	419
20.7	475	1.3	69.1	6500	**F313_69.1 S3 ME3SA4**	**F313_69.1 S3 MX3SA4**	418	**F313_69.1 P90 BE90S4**	**F313_69.1 P90 BX90S4**	419
21.5	458	2.4	66.5	8500	**F413_66.5 S3 ME3SA4**	**F413_66.5 S3 MX3SA4**	422	**F413_66.5 P90 BE90S4**	**F413_66.5 P90 BX90S4**	423
21.9	450	0.9	65.3	4610	**F253_65.3 S3 ME3SA4**	**F253_65.3 S3 MX3SA4**	414	**F253_65.3 P90 BE90S4**	**F253_65.3 P90 BX90S4**	415
22.8	432	1.4	62.8	6500	**F313_62.8 S3 ME3SA4**	**F313_62.8 S3 MX3SA4**	418	**F313_62.8 P90 BE90S4**	**F313_62.8 P90 BX90S4**	419
23.7	415	2.7	60.2	8500	**F413_60.2 S3 ME3SA4**	**F413_60.2 S3 MX3SA4**	422	**F413_60.2 P90 BE90S4**	**F413_60.2 P90 BX90S4**	423
24.5	401	1.0	58.3	4500	**F253_58.3 S3 ME3SA4**	**F253_58.3 S3 MX3SA4**	414	**F253_58.3 P90 BE90S4**	**F253_58.3 P90 BX90S4**	415
27.5	359	1.7	52.1	6500	**F313_52.1 S3 ME3SA4**	**F313_52.1 S3 MX3SA4**	418	**F313_52.1 P90 BE90S4**	**F313_52.1 P90 BX90S4**	419
27.8	354	3.1	51.5	8500	**F413_51.5 S3 ME3SA4**	**F413_51.5 S3 MX3SA4**	422	**F413_51.5 P90 BE90S4**	**F413_51.5 P90 BX90S4**	423
28.2	350	1.1	50.8	4450	**F253_50.8 S3 ME3SA4**	**F253_50.8 S3 MX3SA4**	414	**F253_50.8 P90 BE90S4**	**F253_50.8 P90 BX90S4**	415
29.8	337	3.2	47.9	8500	**F412_47.9 S3 ME3SA4**	**F412_47.9 S3 MX3SA4**	422	**F412_47.9 P90 BE90S4**	**F412_47.9 P90 BX90S4**	423
30	327	1.8	47.5	6500	**F313_47.5 S3 ME3SA4**	**F313_47.5 S3 MX3SA4**	418	**F313_47.5 P90 BE90S4**	**F313_47.5 P90 BX90S4**	419
31	314	1.3	45.6	4400	**F253_45.6 S3 ME3SA4**	**F253_45.6 S3 MX3SA4**	414	**F253_45.6 P90 BE90S4**	**F253_45.6 P90 BX90S4**	415
32	314	1.9	44.6	6500	**F312_44.6 S3 ME3SA4**	**F312_44.6 S3 MX3SA4**	418	**F312_44.6 P90 BE90S4**	**F312_44.6 P90 BX90S4**	419
32	312	1.2	44.4	4470	**F252_44.4 S3 ME3SA4**	**F252_44.4 S3 MX3SA4**	414	**F252_44.4 P90 BE90S4**	**F252_44.4 P90 BX90S4**	415
35	286	1.3	40.7	4410	**F252_40.7 S3 ME3SA4**	**F252_40.7 S3 MX3SA4**	414	**F252_40.7 P90 BE90S4**	**F252_40.7 P90 BX90S4**	415
35	284	2.1	40.4	6500	**F312_40.4 S3 ME3SA4**	**F312_40.4 S3 MX3SA4**	418	**F312_40.4 P90 BE90S4**	**F312_40.4 P90 BX90S4**	419
38	266	0.9	37.9	3050	**F202_37.9 S3 ME3SA4**	**F202_37.9 S3 MX3SA4**	410	**F202_37.9 P90 BE90S4**	**F202_37.9 P90 BX90S4**	411
38	265	2.3	37.7	6500	**F312_37.7 S3 ME3SA4**	**F312_37.7 S3 MX3SA4**	418	**F312_37.7 P90 BE90S4**	**F312_37.7 P90 BX90S4**	419
39	256	1.6	36.4	4330	**F252_36.4 S3 ME3SA4**	**F252_36.4 S3 MX3SA4**	414	**F252_36.4 P90 BE90S4**	**F252_36.4 P90 BX90S4**	415
42	242	2.5	34.4	6500	**F312_34.4 S3 ME3SA4**	**F312_34.4 S3 MX3SA4**	418	**F312_34.4 P90 BE90S4**	**F312_34.4 P90 BX90S4**	419
43	233	1.1	33.1	2980	**F202_33.1 S3 ME3SA4**	**F202_33.1 S3 MX3SA4**	410	**F202_33.1 P90 BE90S4**	**F202_33.1 P90 BX90S4**	411
44	226	1.8	32.2	4240	**F252_32.2 S3 ME3SA4**	**F252_32.2 S3 MX3SA4**	414	**F252_32.2 P90 BE90S4**	**F252_32.2 P90 BX90S4**	415
47	214	1.2	30.4	2930	**F202_30.4 S3 ME3SA4**	**F202_30.4 S3 MX3SA4**	410	**F202_30.4 P90 BE90S4**	**F202_30.4 P90 BX90S4**	411
47	212	2.8	30.1	6500	**F312_30.1 S3 ME3SA4**	**F312_30.1 S3 MX3SA4**	418	**F312_30.1 P90 BE90S4**	**F312_30.1 P90 BX90S4**	419
48	211	1.9	30.0	4190	**F252_30.0 S3 ME3SA4**	**F252_30.0 S3 MX3SA4**	414	**F252_30.0 P90 BE90S4**	**F252_30.0 P90 BX90S4**	415
52	192	3.1	27.3	6500	**F312_27.3 S3 ME3SA4**	**F312_27.3 S3 MX3SA4**	418	**F312_27.3 P90 BE90S4**	**F312_27.3 P90 BX90S4**	419
53	191	2.1	27.2	4100	**F252_27.2 S3 ME3SA4**	**F252_27.2 S3 MX3SA4**	414	**F252_27.2 P90 BE90S4**	**F252_27.2 P90 BX90S4**	415
55	182	1.3	25.9	2840	**F202_25.9 S3 ME3SA4**	**F202_25.9 S3 MX3SA4**	410	**F202_25.9 P90 BE90S4**	**F202_25.9 P90 BX90S4**	411
60	167	2.4	23.8	3990	**F252_23.8 S3 ME3SA4**	**F252_23.8 S3 MX3SA4**	414	**F252_23.8 P90 BE90S4**	**F252_23.8 P90 BX90S4**	415
62	163	1.4	23.1	2780	**F202_23.1 S3 ME3SA4**	**F202_23.1 S3 MX3SA4**	410	**F202_23.1 P90 BE90S4**	**F202_23.1 P90 BX90S4**	411
66	153	2.6	21.8	3920	**F252_21.8 S3 ME3SA4**	**F252_21.8 S3 MX3SA4**	414	**F252_21.8 P90 BE90S4**	**F252_21.8 P90 BX90S4**	415
71	142	1.6	20.2	2690	**F202_20.2 S3 ME3SA4**	**F202_20.2 S3 MX3SA4**	410	**F202_20.2 P90 BE90S4**	**F202_20.2 P90 BX90S4**	411
74	136	1.0	19.3	2170	**F102_19.3 S3 ME3SA4**	**F102_19.3 S3 MX3SA4**	406	**F102_19.3 P90 BE90S4**	**F102_19.3 P90 BX90S4**	407
77	131	3.1	18.6	3780	**F252_18.6 S3 ME3SA4**	**F252_18.6 S3 MX3SA4**	414	**F252_18.6 P90 BE90S4**	**F252_18.6 P90 BX90S4**	415
79	127	1.7	18.1	2620	**F202_18.1 S3 ME3SA4**	**F202_18.1 S3 MX3SA4**	410	**F202_18.1 P90 BE90S4**	**F202_18.1 P90 BX90S4**	411
84	119	1.1	17.0	2110	**F102_17.0 S3 ME3SA4**	**F102_17.0 S3 MX3SA4**	406	**F102_17.0 P90 BE90S4**	**F102_17.0 P90 BX90S4**	407
86	117	3.4	16.6	3670	**F252_16.6 S3 ME3SA4**	**F252_16.6 S3 MX3SA4**	414	**F252_16.6 P90 BE90S4**	**F252_16.6 P90 BX90S4**	415
97	104	2.0	14.8	2500	**F202_14.8 S3 ME3SA4**	**F202_14.8 S3 MX3SA4**	410	**F202_14.8 P90 BE90S4**	**F202_14.8 P90 BX90S4**	411
98	103	1.2	14.6	2050	**F102_14.6 S3 ME3SA4**	**F102_14.6 S3 MX3SA4**	406	**F102_14.6 P90 BE90S4**	**F102_14.6 P90 BX90S4**	407
110	92	1.1	13.0	1980	**F102_13.0 S3 ME3SA4**	**F102_13.0 S3 MX3SA4**	406	**F102_13.0 P90 BE90S4**	**F102_13.0 P90 BX90S4**	407
124	81	1.2	11.5	1920	**F102_11.5 S3 ME3SA4**	**F102_11.5 S3 MX3SA4**	406	**F102_11.5 P90 BE90S4**	**F102_11.5 P90 BX90S4**	407
127	79	2.2	11.2	2310	**F202_11.2 S3 ME3SA4**	**F202_11.2 S3 MX3SA4**	410	**F202_11.2 P90 BE90S4**	**F202_11.2 P90 BX90S4**	411

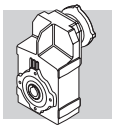

1.1 kW

n_2 min-1	M_2 Nm	S	i	R_{n2} N	IE2	IE3		IEC IE2	IEC IE3	
143	71	2.3	10.0	2200	**F202_10.0 S3 ME3SA4**	**F202_10.0 S3 MX3SA4**	410	**F202_10.0 P90 BE90S4**	**F202_10.0 P90 BX90S4**	411
146	69	1.3	9.8	1840	**F102_9.8 S3 ME3SA4**	**F102_9.8 S3 MX3SA4**	406	**F102_9.8 P90 BE90S4**	**F102_9.8 P90 BX90S4**	407
164	61	2.5	8.7	2160	**F202_8.7 S3 ME3SA4**	**F202_8.7 S3 MX3SA4**	410	**F202_8.7 P90 BE90S4**	**F202_8.7 P90 BX90S4**	411
167	60	1.4	8.6	1780	**F102_8.6 S3 ME3SA4**	**F102_8.6 S3 MX3SA4**	406	**F102_8.6 P90 BE90S4**	**F102_8.6 P90 BX90S4**	407
183	55	2.6	7.8	2100	**F202_7.8 S3 ME3SA4**	**F202_7.8 S3 MX3SA4**	410	**F202_7.8 P90 BE90S4**	**F202_7.8 P90 BX90S4**	411
193	52	1.5	7.4	1720	**F102_7.4 S3 ME3SA4**	**F102_7.4 S3 MX3SA4**	406	**F102_7.4 P90 BE90S4**	**F102_7.4 P90 BX90S4**	407
223	45	2.9	6.4	1980	**F202_6.4 S3 ME3SA4**	**F202_6.4 S3 MX3SA4**	410	**F202_6.4 P90 BE90S4**	**F202_6.4 P90 BX90S4**	411
245	41	1.9	11.5	1600	**F102_11.5S2ME2SB2**		406	**F102_11.5 P80 BE80B2**		407
252	40	3.6	11.2	1910	**F202_11.2S2ME2SB2**		410	**F202_11.2 P80 BE80B2**		411
290	34	2.1	9.8	1530	**F102_9.8S2ME2SB2**		406	**F102_9.8 P80 BE80B2**		407
330	30	2.2	8.6	1480	**F102_8.6S2ME2SB2**		406	**F102_8.6 P80 BE80B2**		407
382	26	2.4	7.4	1410	**F102_7.4S2ME2SB2**		406	**F102_7.4 P80 BE80B2**		407

1.5 kW

n_2 min-1	M_2 Nm	S	i	R_{n2} N	IE2	IE3		IEC IE2	IEC IE3	
0.8	15321	0.9	1702.3	55000	**F904_1702 S3 ME3SB4**	**F904_1702 S3 MX3SB4**	440	**F904_1702 P90 BE90LA4**	**F904_1702 P90 BX90LA4**	441
0.9	14142	1.0	1571.4	55000	**F904_1571 S3 ME3SB4**	**F904_1571 S3 MX3SB4**	440	**F904_1571 P90 BE90LA4**	**F904_1571 P90 BX90LA4**	441
1.0	12851	1.1	1427.9	55000	**F904_1428 S3 ME3SB4**	**F904_1428 S3 MX3SB4**	440	**F904_1428 P90 BE90LA4**	**F904_1428 P90 BX90LA4**	441
1.1	11863	1.2	1318.1	55000	**F904_1318 S3 ME3SB4**	**F904_1318 S3 MX3SB4**	440	**F904_1318 P90 BE90LA4**	**F904_1318 P90 BX90LA4**	441
1.2	10845	1.3	1204.9	55000	**F904_1205 S3 ME3SB4**	**F904_1205 S3 MX3SB4**	440	**F904_1205 P90 BE90LA4**	**F904_1205 P90 BX90LA4**	441
1.3	10010	1.4	1112.3	55000	**F904_1112 S3 ME3SB4**	**F904_1112 S3 MX3SB4**	440	**F904_1112 P90 BE90LA4**	**F904_1112 P90 BX90LA4**	441
1.5	8874	1.6	986.0	55000	**F904_986.0 S3 ME3SB4**	**F904_986.0 S3 MX3SB4**	440	**F904_986.0 P90 BE90LA4**	**F904_986.0 P90 BX90LA4**	441
1.5	8748	0.9	972.0	45000	**F804_972.0 S3 ME3SB4**	**F804_972.0 S3 MX3SB4**	437	**F804_972.0 P90 BE90LA4**	**F804_972.0 P90 BX90LA4**	438
1.6	8192	1.7	910.2	55000	**F904_910.2 S3 ME3SB4**	**F904_910.2 S3 MX3SB4**	440	**F904_910.2 P90 BE90LA4**	**F904_910.2 P90 BX90LA4**	441
1.6	8075	1.0	897.3	45000	**F804_897.3 S3 ME3SB4**	**F804_897.3 S3 MX3SB4**	437	**F804_897.3 P90 BE90LA4**	**F804_897.3 P90 BX90LA4**	438
1.8	6970	1.1	774.4	45000	**F804_774.4 S3 ME3SB4**	**F804_774.4 S3 MX3SB4**	437	**F804_774.4 P90 BE90LA4**	**F804_774.4 P90 BX90LA4**	438
1.8	6961	2.0	773.4	55000	**F904_773.4 S3 ME3SB4**	**F904_773.4 S3 MX3SB4**	440	**F904_773.4 P90 BE90LA4**	**F904_773.4 P90 BX90LA4**	441
2.0	6434	1.2	714.9	45000	**F804_714.9 S3 ME3SB4**	**F804_714.9 S3 MX3SB4**	437	**F804_714.9 P90 BE90LA4**	**F804_714.9 P90 BX90LA4**	438
2.0	6426	2.2	714.0	55000	**F904_714.0 S3 ME3SB4**	**F904_714.0 S3 MX3SB4**	440	**F904_714.0 P90 BE90LA4**	**F904_714.0 P90 BX90LA4**	441
2.3	5631	2.5	625.6	55000	**F904_625.6 S3 ME3SB4**	**F904_625.6 S3 MX3SB4**	440	**F904_625.6 P90 BE90LA4**	**F904_625.6 P90 BX90LA4**	441
2.3	5498	1.5	610.9	45000	**F804_610.9 S3 ME3SB4**	**F804_610.9 S3 MX3SB4**	437	**F804_610.9 P90 BE90LA4**	**F804_610.9 P90 BX90LA4**	438
2.4	5462	0.9	606.8	35000	**F704_606.8 S3 ME3SB4**	**F704_606.8 S3 MX3SB4**	434	**F704_606.8 P90 BE90LA4**	**F704_606.8 P90 BX90LA4**	435
2.5	5197	2.7	577.5	55000	**F904_577.5 S3 ME3SB4**	**F904_577.5 S3 MX3SB4**	440	**F904_577.5 P90 BE90LA4**	**F904_577.5 P90 BX90LA4**	441
2.5	5075	1.6	563.9	45000	**F804_563.9 S3 ME3SB4**	**F804_563.9 S3 MX3SB4**	437	**F804_563.9 P90 BE90LA4**	**F804_563.9 P90 BX90LA4**	438
2.8	4594	1.1	510.4	35000	**F704_510.4 S3 ME3SB4**	**F704_510.4 S3 MX3SB4**	434	**F704_510.4 P90 BE90LA4**	**F704_510.4 P90 BX90LA4**	435
2.9	4460	3.1	495.6	55000	**F904_495.6 S3 ME3SB4**	**F904_495.6 S3 MX3SB4**	440	**F904_495.6 P90 BE90LA4**	**F904_495.6 P90 BX90LA4**	441
2.9	4402	1.8	489.1	45000	**F804_489.1 S3 ME3SB4**	**F804_489.1 S3 MX3SB4**	437	**F804_489.1 P90 BE90LA4**	**F804_489.1 P90 BX90LA4**	438
3.0	4240	1.2	471.2	35000	**F704_471.2 S3 ME3SB4**	**F704_471.2 S3 MX3SB4**	434	**F704_471.2 P90 BE90LA4**	**F704_471.2 P90 BX90LA4**	435
3.1	4117	3.4	457.5	55000	**F904_457.5 S3 ME3SB4**	**F904_457.5 S3 MX3SB4**	440	**F904_457.5 P90 BE90LA4**	**F904_457.5 P90 BX90LA4**	441
3.2	4063	2.0	451.5	45000	**F804_451.5 S3 ME3SB4**	**F804_451.5 S3 MX3SB4**	437	**F804_451.5 P90 BE90LA4**	**F804_451.5 P90 BX90LA4**	438
3.5	3632	1.4	403.5	35000	**F704_403.5 S3 ME3SB4**	**F704_403.5 S3 MX3SB4**	434	**F704_403.5 P90 BE90LA4**	**F704_403.5 P90 BX90LA4**	435
3.7	3448	2.3	383.2	45000	**F804_383.2 S3 ME3SB4**	**F804_383.2 S3 MX3SB4**	437	**F804_383.2 P90 BE90LA4**	**F804_383.2 P90 BX90LA4**	438
3.8	3352	1.5	372.5	35000	**F704_372.5 S3 ME3SB4**	**F704_372.5 S3 MX3SB4**	434	**F704_372.5 P90 BE90LA4**	**F704_372.5 P90 BX90LA4**	435
4.0	3183	2.5	353.7	45000	**F804_353.7 S3 ME3SB4**	**F804_353.7 S3 MX3SB4**	437	**F804_353.7 P90 BE90LA4**	**F804_353.7 P90 BX90LA4**	438
4.2	3075	0.9	341.7	20000	**F604_341.7 S3 ME3SB4**	**F604_341.7 S3 MX3SB4**	430	**F604_341.7 P90 BE90LA4**	**F604_341.7 P90 BX90LA4**	431
4.5	2839	1.0	315.4	20000	**F604_315.4 S3 ME3SB4**	**F604_315.4 S3 MX3SB4**	430	**F604_315.4 P90 BE90LA4**	**F604_315.4 P90 BX90LA4**	431
4.7	2739	1.8	304.3	35000	**F704_304.3 S3 ME3SB4**	**F704_304.3 S3 MX3SB4**	434	**F704_304.3 P90 BE90LA4**	**F704_304.3 P90 BX90LA4**	435
4.8	2670	3.0	296.7	45000	**F804_296.7 S3 ME3SB4**	**F804_296.7 S3 MX3SB4**	437	**F804_296.7 P90 BE90LA4**	**F804_296.7 P90 BX90LA4**	438
5.1	2528	2.0	280.9	35000	**F704_280.9 S3 ME3SB4**	**F704_280.9 S3 MX3SB4**	434	**F704_280.9 P90 BE90LA4**	**F704_280.9 P90 BX90LA4**	435
5.1	2610	1.1	280.7	20000	**F603_280.7 S3 ME3SB4**	**F603_280.7 S3 MX3SB4**	430	**F603_280.7 P90 BE90LA4**	**F603_280.7 P90 BX90LA4**	431
5.2	2465	3.2	273.9	45000	**F804_273.9 S3 ME3SB4**	**F804_273.9 S3 MX3SB4**	437	**F804_273.9 P90 BE90LA4**	**F804_273.9 P90 BX90LA4**	438
5.5	2409	1.2	259.1	20000	**F603_259.1 S3 ME3SB4**	**F603_259.1 S3 MX3SB4**	430	**F603_259.1 P90 BE90LA4**	**F603_259.1 P90 BX90LA4**	431

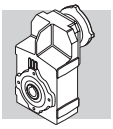

1.5 kW

n_2 min-1	M_2 Nm	S	i	R_{n2} N	IE2	IE3		IEC IE2	IE3	
6.1	2193	1.3	235.8	20000	**F603_235.8 S3 ME3SB4**	**F603_235.8 S3 MX3SB4**	430	**F603_235.8 P90 BE90LA4**	**F603_235.8 P90 BX90LA4**	431
6.1	2111	2.4	234.6	35000	**F704_234.6 S3 ME3SB4**	**F704_234.6 S3 MX3SB4**	434	**F704_234.6 P90 BE90LA4**	**F704_234.6 P90 BX90LA4**	435
6.6	2024	1.4	217.6	20000	**F603_217.6 S3 ME3SB4**	**F603_217.6 S3 MX3SB4**	430	**F603_217.6 P90 BE90LA4**	**F603_217.6 P90 BX90LA4**	431
6.6	1949	2.6	216.5	35000	**F704_216.5 S3 ME3SB4**	**F704_216.5 S3 MX3SB4**	434	**F704_216.5 P90 BE90LA4**	**F704_216.5 P90 BX90LA4**	435
7.1	1882	1.0	202.4	12000	**F513_202.4 S3 ME3SB4**	**F513_202.4 S3 MX3SB4**	426	**F513_202.4 P90 BE90LA4**	**F513_202.4 P90 BX90LA4**	427
7.1	1873	1.5	201.4	20000	**F603_201.4 S3 ME3SB4**	**F603_201.4 S3 MX3SB4**	430	**F603_201.4 P90 BE90LA4**	**F603_201.4 P90 BX90LA4**	431
7.3	1823	2.7	196.0	35000	**F703_196.0 S3 ME3SB4**	**F703_196.0 S3 MX3SB4**	434	**F703_196.0 P90 BE90LA4**	**F703_196.0 P90 BX90LA4**	435
7.7	1729	1.7	185.9	20000	**F603_185.9 S3 ME3SB4**	**F603_185.9 S3 MX3SB4**	430	**F603_185.9 P90 BE90LA4**	**F603_185.9 P90 BX90LA4**	431
7.9	1683	3.0	180.9	35000	**F703_180.9 S3 ME3SB4**	**F703_180.9 S3 MX3SB4**	434	**F703_180.9 P90 BE90LA4**	**F703_180.9 P90 BX90LA4**	435
8.6	1550	3.2	166.7	35000	**F703_166.7 S3 ME3SB4**	**F703_166.7 S3 MX3SB4**	434	**F703_166.7 P90 BE90LA4**	**F703_166.7 P90 BX90LA4**	435
8.6	1540	1.2	165.6	12000	**F513_165.6 S3 ME3SB4**	**F513_165.6 S3 MX3SB4**	426	**F513_165.6 P90 BE90LA4**	**F513_165.6 P90 BX90LA4**	427
8.8	1515	1.9	162.9	20000	**F603_162.9 S3 ME3SB4**	**F603_162.9 S3 MX3SB4**	430	**F603_162.9 P90 BE90LA4**	**F603_162.9 P90 BX90LA4**	431
9.3	1431	3.5	153.8	35000	**F703_153.8 S3 ME3SB4**	**F703_153.8 S3 MX3SB4**	434	**F703_153.8 P90 BE90LA4**	**F703_153.8 P90 BX90LA4**	435
9.5	1398	2.1	150.4	20000	**F603_150.4 S3 ME3SB4**	**F603_150.4 S3 MX3SB4**	430	**F603_150.4 P90 BE90LA4**	**F603_150.4 P90 BX90LA4**	431
10.6	1250	0.9	134.4	8500	**F413_134.4 S3 ME3SB4**	**F413_134.4 S3 MX3SB4**	422	**F413_134.4 P90 BE90LA4**	**F413_134.4 P90 BX90LA4**	423
11.0	1214	2.4	130.5	20000	**F603_130.5 S3 ME3SB4**	**F603_130.5 S3 MX3SB4**	430	**F603_130.5 P90 BE90LA4**	**F603_130.5 P90 BX90LA4**	431
11.0	1208	1.5	129.9	12000	**F513_129.9 S3 ME3SB4**	**F513_129.9 S3 MX3SB4**	426	**F513_129.9 P90 BE90LA4**	**F513_129.9 P90 BX90LA4**	427
11.9	1120	2.6	120.5	20000	**F603_120.5 S3 ME3SB4**	**F603_120.5 S3 MX3SB4**	430	**F603_120.5 P90 BE90LA4**	**F603_120.5 P90 BX90LA4**	431
13.4	989	2.9	106.4	20000	**F603_106.4 S3 ME3SB4**	**F603_106.4 S3 MX3SB4**	430	**F603_106.4 P90 BE90LA4**	**F603_106.4 P90 BX90LA4**	431
13.5	986	1.1	106.0	8500	**F413_106.0 S3 ME3SB4**	**F413_106.0 S3 MX3SB4**	422	**F413_106.0 P90 BE90LA4**	**F413_106.0 P90 BX90LA4**	423
13.6	977	1.8	105.1	12000	**F513_105.1 S3 ME3SB4**	**F513_105.1 S3 MX3SB4**	426	**F513_105.1 P90 BE90LA4**	**F513_105.1 P90 BX90LA4**	427
14.6	913	3.2	98.2	20000	**F603_98.2 S3 ME3SB4**	**F603_98.2 S3 MX3SB4**	430	**F603_98.2 P90 BE90LA4**	**F603_98.2 P90 BX90LA4**	431
16.8	789	1.4	84.9	8500	**F413_84.9 S3 ME3SB4**	**F413_84.9 S3 MX3SB4**	422	**F413_84.9 P90 BE90LA4**	**F413_84.9 P90 BX90LA4**	423
17.2	774	2.3	83.2	12000	**F513_83.2 S3 ME3SB4**	**F513_83.2 S3 MX3SB4**	426	**F513_83.2 P90 BE90LA4**	**F513_83.2 P90 BX90LA4**	427
20.7	642	0.9	69.1	6500	**F313_69.1 S3 ME3SB4**	**F313_69.1 S3 MX3SB4**	418	**F313_69.1 P90 BE90LA4**	**F313_69.1 P90 BX90LA4**	419
21.5	618	1.8	66.5	8500	**F413_66.5 S3 ME3SB4**	**F413_66.5 S3 MX3SB4**	422	**F413_66.5 P90 BE90LA4**	**F413_66.5 P90 BX90LA4**	423
21.7	612	2.9	65.8	12000	**F513_65.8 S3 ME3SB4**	**F513_65.8 S3 MX3SB4**	426	**F513_65.8 P90 BE90LA4**	**F513_65.8 P90 BX90LA4**	427
22.8	584	1.0	62.8	6500	**F313_62.8 S3 ME3SB4**	**F313_62.8 S3 MX3SB4**	418	**F313_62.8 P90 BE90LA4**	**F313_62.8 P90 BX90LA4**	419
23.7	560	2.0	60.2	8500	**F413_60.2 S3 ME3SB4**	**F413_60.2 S3 MX3SB4**	422	**F413_60.2 P90 BE90LA4**	**F413_60.2 P90 BX90LA4**	423
27.5	484	1.2	52.1	6500	**F313_52.1 S3 ME3SB4**	**F313_52.1 S3 MX3SB4**	418	**F313_52.1 P90 BE90LA4**	**F313_52.1 P90 BX90LA4**	419
27.8	479	2.3	51.5	8500	**F413_51.5 S3 ME3SB4**	**F413_51.5 S3 MX3SB4**	422	**F413_51.5 P90 BE90LA4**	**F413_51.5 P90 BX90LA4**	423
29.8	455	2.4	47.9	8500	**F412_47.9 S3 ME3SB4**	**F412_47.9 S3 MX3SB4**	422	**F412_47.9 P90 BE90LA4**	**F412_47.9 P90 BX90LA4**	423
30	442	1.3	47.5	6500	**F313_47.5 S3 ME3SB4**	**F313_47.5 S3 MX3SB4**	418	**F313_47.5 P90 BE90LA4**	**F313_47.5 P90 BX90LA4**	419
31	424	0.9	45.6	3880	**F253_45.6 S3 ME3SB4**	**F253_45.6 S3 MX3SB4**	414	**F253_45.6 P90 BE90LA4**	**F253_45.6 P90 BX90LA4**	415
32	424	1.4	44.6	6500	**F312_44.6 S3 ME3SB4**	**F312_44.6 S3 MX3SB4**	418	**F312_44.6 P90 BE90LA4**	**F312_44.6 P90 BX90LA4**	419
32	422	0.9	44.4	4180	**F252_44.4 S3 ME3SB4**	**F252_44.4 S3 MX3SB4**	414	**F252_44.4 P90 BE90LA4**	**F252_44.4 P90 BX90LA4**	415
35	387	1.0	40.7	3970	**F252_40.7 S3 ME3SB4**	**F252_40.7 S3 MX3SB4**	414	**F252_40.7 P90 BE90LA4**	**F252_40.7 P90 BX90LA4**	415
35	383	1.6	40.4	6500	**F312_40.4 S3 ME3SB4**	**F312_40.4 S3 MX3SB4**	418	**F312_40.4 P90 BE90LA4**	**F312_40.4 P90 BX90LA4**	419
37	363	3.0	38.2	8500	**F412_38.2 S3 ME3SB4**	**F412_38.2 S3 MX3SB4**	422	**F412_38.2 P90 BE90LA4**	**F412_38.2 P90 BX90LA4**	423
38	358	1.7	37.7	6500	**F312_37.7 S3 ME3SB4**	**F312_37.7 S3 MX3SB4**	418	**F312_37.7 P90 BE90LA4**	**F312_37.7 P90 BX90LA4**	419
39	346	1.2	36.4	3940	**F252_36.4 S3 ME3SB4**	**F252_36.4 S3 MX3SB4**	414	**F252_36.4 P90 BE90LA4**	**F252_36.4 P90 BX90LA4**	415
42	326	1.8	34.4	6500	**F312_34.4 S3 ME3SB4**	**F312_34.4 S3 MX3SB4**	418	**F312_34.4 P90 BE90LA4**	**F312_34.4 P90 BX90LA4**	419
44	306	1.3	32.2	3890	**F252_32.2 S3 ME3SB4**	**F252_32.2 S3 MX3SB4**	414	**F252_32.2 P90 BE90LA4**	**F252_32.2 P90 BX90LA4**	415
47	286	2.1	30.1	6500	**F312_30.1 S3 ME3SB4**	**F312_30.1 S3 MX3SB4**	418	**F312_30.1 P90 BE90LA4**	**F312_30.1 P90 BX90LA4**	419
48	285	1.4	30.0	3860	**F252_30.0 S3 ME3SB4**	**F252_30.0 S3 MX3SB4**	414	**F252_30.0 P90 BE90LA4**	**F252_30.0 P90 BX90LA4**	415
52	259	2.3	27.3	6500	**F312_27.3 S3 ME3SB4**	**F312_27.3 S3 MX3SB4**	418	**F312_27.3 P90 BE90LA4**	**F312_27.3 P90 BX90LA4**	419
53	258	1.5	27.2	3810	**F252_27.2 S3 ME3SB4**	**F252_27.2 S3 MX3SB4**	414	**F252_27.2 P90 BE90LA4**	**F252_27.2 P90 BX90LA4**	415
55	246	1.0	25.9	2640	**F202_25.9 S3 ME3SB4**	**F202_25.9 S3 MX3SB4**	410	**F202_25.9 P90 BE90LA4**	**F202_25.9 P90 BX90LA4**	411
60	226	1.8	23.8	3730	**F252_23.8 S3 ME3SB4**	**F252_23.8 S3 MX3SB4**	414	**F252_23.8 P90 BE90LA4**	**F252_23.8 P90 BX90LA4**	415
61	222	2.7	23.4	6480	**F312_23.4 S3 ME3SB4**	**F312_23.4 S3 MX3SB4**	418	**F312_23.4 P90 BE90LA4**	**F312_23.4 P90 BX90LA4**	419
62	220	1.1	23.1	2600	**F202_23.1 S3 ME3SB4**	**F202_23.1 S3 MX3SB4**	410	**F202_23.1 P90 BE90LA4**	**F202_23.1 P90 BX90LA4**	411
66	207	1.9	21.8	3680	**F252_21.8 S3 ME3SB4**	**F252_21.8 S3 MX3SB4**	414	**F252_21.8 P90 BE90LA4**	**F252_21.8 P90 BX90LA4**	415
68	201	3.0	21.1	6320	**F312_21.1 S3 ME3SB4**	**F312_21.1 S3 MX3SB4**	418	**F312_21.1 P90 BE90LA4**	**F312_21.1 P90 BX90LA4**	419
71	191	1.2	20.2	2530	**F202_20.2 S3 ME3SB4**	**F202_20.2 S3 MX3SB4**	410	**F202_20.2 P90 BE90LA4**	**F202_20.2 P90 BX90LA4**	411
77	177	2.3	18.6	3570	**F252_18.6 S3 ME3SB4**	**F252_18.6 S3 MX3SB4**	414	**F252_18.6 P90 BE90LA4**	**F252_18.6 P90 BX90LA4**	415
77	176	3.4	18.5	6110	**F312_18.5 S3 ME3SB4**	**F312_18.5 S3 MX3SB4**	418	**F312_18.5 P90 BE90LA4**	**F312_18.5 P90 BX90LA4**	419
79	172	1.2	18.1	2480	**F202_18.1 S3 ME3SB4**	**F202_18.1 S3 MX3SB4**	410	**F202_18.1 P90 BE90LA4**	**F202_18.1 P90 BX90LA4**	411

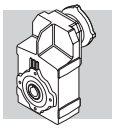

1.5 kW

n_2 min-1	M_2 Nm	S	i	R_{n2} N	IE2	IE3		IEC IE2	IEC IE3	
86	158	2.5	16.6	3490	**F252_16.6 S3 ME3SB4**	**F252_16.6 S3 MX3SB4**	414	**F252_16.6 P90 BE90LA4**	**F252_16.6 P90 BX90LA4**	415
97	141	1.4	14.8	2380	**F202_14.8 S3 ME3SB4**	**F202_14.8 S3 MX3SB4**	410	**F202_14.8 P90 BE90LA4**	**F202_14.8 P90 BX90LA4**	411
99	137	2.9	14.5	3390	**F252_14.5 S3 ME3SB4**	**F252_14.5 S3 MX3SB4**	414	**F252_14.5 P90 BE90LA4**	**F252_14.5 P90 BX90LA4**	415
110	123	3.2	13.0	3310	**F252_13.0 S3 ME3SB4**	**F252_13.0 S3 MX3SB4**	414	**F252_13.0 P90 BE90LA4**	**F252_13.0 P90 BX90LA4**	415
124	110	0.9	11.5	1160	**F102_11.5 S3 ME3SB4**	**F102_11.5 S3 MX3SB4**	406	**F102_11.5 P90 BE90LA4**	**F102_11.5 P90 BX90LA4**	407
127	107	1.7	11.2	2220	**F202_11.2 S3 ME3SB4**	**F202_11.2 S3 MX3SB4**	410	**F202_11.2 P90 BE90LA4**	**F202_11.2 P90 BX90LA4**	411
143	95	1.7	10.0	2160	**F202_10.0 S3 ME3SB4**	**F202_10.0 S3 MX3SB4**	410	**F202_10.0 P90 BE90LA4**	**F202_10.0 P90 BX90LA4**	411
146	93	1.0	9.8	1760	**F102_9.8 S3 ME3SB4**	**F102_9.8 S3 MX3SB4**	406	**F102_9.8 P90 BE90LA4**	**F102_9.8 P90 BX90LA4**	407
153	89	3.0	9.4	3070	**F252_9.4 S3 ME3SB4**	**F252_9.4 S3 MX3SB4**	414	**F252_9.4 P90 BE90LA4**	**F252_9.4 P90 BX90LA4**	415
164	83	1.9	8.7	2090	**F202_8.7 S3 ME3SB4**	**F202_8.7 S3 MX3SB4**	410	**F202_8.7 P90 BE90LA4**	**F202_8.7 P90 BX90LA4**	411
167	82	1.0	8.6	1710	**F102_8.6 S3 ME3SB4**	**F102_8.6 S3 MX3SB4**	406	**F102_8.6 P90 BE90LA4**	**F102_8.6 P90 BX90LA4**	407
170	80	3.3	8.4	2980	**F252_8.4 S3 ME3SB4**	**F252_8.4 S3 MX3SB4**	414	**F252_8.4 P90 BE90LA4**	**F252_8.4 P90 BX90LA4**	415
183	74	1.9	7.8	2030	**F202_7.8 S3 ME3SB4**	**F202_7.8 S3 MX3SB4**	410	**F202_7.8 P90 BE90LA4**	**F202_7.8 P90 BX90LA4**	411
193	70	1.1	7.4	1650	**F102_7.4 S3 ME3SB4**	**F102_7.4 S3 MX3SB4**	406	**F102_7.4 P90 BE90LA4**	**F102_7.4 P90 BX90LA4**	407
223	61	2.1	6.4	1930	**F202_6.4 S3 ME3SB4**	**F202_6.4 S3 MX3SB4**	410	**F202_6.4 P90 BE90LA4**	**F202_6.4 P90 BX90LA4**	411
247	55	1.4	11.5	1560	**F102_11.5 S3 ME3SA2**		406	**F102_11.5 P90 BE90SA2**		407
254	54	2.6	11.2	1860	**F202_11.2 S3 ME3SA2**		410	**F202_11.2 P90 BE90SA2**		411
292	47	1.6	9.8	1490	**F102_9.8 S3 ME3SA2**		406	**F102_9.8 P90 BE90SA2**		407
327	42	3.0	8.7	1740	**F202_8.7 S3 ME3SA2**		410	**F202_8.7 P90 BE90SA2**		411
333	41	1.6	8.6	1440	**F102_8.6 S3 ME3SA2**		406	**F102_8.6 P90 BE90SA2**		407
364	37	3.1	7.8	1680	**F202_7.8 S3 ME3SA2**		410	**F202_7.8 P90 BE90SA2**		411
386	35	1.8	7.4	1380	**F102_7.4 S3 ME3SA2**		406	**F102_7.4 P90 BE90SA2**		407
445	31	3.4	6.4	1590	**F202_6.4 S3 ME3SA2**		410	**F202_6.4 P90 BE90SA2**		411

2.2 kW

n_2 min-1	M_2 Nm	S	i	R_{n2} N	IE2	IE3		IEC IE2	IEC IE3	
1.2	15941	0.9	1204.9	55000	**F904_1205 S3 ME3LA4**	**F904_1205 S3 MX3LA4**	440	**F904_1205 P100 BE100LA4**	**F904_1205 P100 BX100LA4**	441
1.3	14715	1.0	1112.3	55000	**F904_1112 S3 ME3LA4**	**F904_1112 S3 MX3LA4**	440	**F904_1112 P100 BE100LA4**	**F904_1112 P100 BX100LA4**	441
1.5	13045	1.1	986.0	55000	**F904_986.0 S3 ME3LA4**	**F904_986.0 S3 MX3LA4**	440	**F904_986.0 P100 BE100LA4**	**F904_986.0 P100 BX100LA4**	441
1.6	12042	1.2	910.2	55000	**F904_910.2 S3 ME3LA4**	**F904_910.2 S3 MX3LA4**	440	**F904_910.2 P100 BE100LA4**	**F904_910.2 P100 BX100LA4**	441
1.8	10233	1.4	773.4	55000	**F904_773.4 S3 ME3LA4**	**F904_773.4 S3 MX3LA4**	440	**F904_773.4 P100 BE100LA4**	**F904_773.4 P100 BX100LA4**	441
2.0	9446	1.5	714.0	55000	**F904_714.0 S3 ME3LA4**	**F904_714.0 S3 MX3LA4**	440	**F904_714.0 P100 BE100LA4**	**F904_714.0 P100 BX100LA4**	441
2.3	8277	1.7	625.6	55000	**F904_625.6 S3 ME3LA4**	**F904_625.6 S3 MX3LA4**	440	**F904_625.6 P100 BE100LA4**	**F904_625.6 P100 BX100LA4**	441
2.3	8082	1.0	610.9	45000	**F804_610.9 S3 ME3LA4**	**F804_610.9 S3 MX3LA4**	437	**F804_610.9 P100 BE100LA4**	**F804_610.9 P100 BX100LA4**	438
2.5	7640	1.8	577.5	55000	**F904_577.5 S3 ME3LA4**	**F904_577.5 S3 MX3LA4**	440	**F904_577.5 P100 BE100LA4**	**F904_577.5 P100 BX100LA4**	441
2.5	7460	1.1	563.9	45000	**F804_563.9 S3 ME3LA4**	**F804_563.9 S3 MX3LA4**	437	**F804_563.9 P100 BE100LA4**	**F804_563.9 P100 BX100LA4**	438
2.9	6556	2.1	495.6	55000	**F904_495.6 S3 ME3LA4**	**F904_495.6 S3 MX3LA4**	440	**F904_495.6 P100 BE100LA4**	**F904_495.6 P100 BX100LA4**	441
2.9	6471	1.2	489.1	45000	**F804_489.1 S3 ME3LA4**	**F804_489.1 S3 MX3LA4**	437	**F804_489.1 P100 BE100LA4**	**F804_489.1 P100 BX100LA4**	438
3.1	6052	2.3	457.5	55000	**F904_457.5 S3 ME3LA4**	**F904_457.5 S3 MX3LA4**	440	**F904_457.5 P100 BE100LA4**	**F904_457.5 P100 BX100LA4**	441
3.2	5973	1.3	451.5	45000	**F804_451.5 S3 ME3LA4**	**F804_451.5 S3 MX3LA4**	437	**F804_451.5 P100 BE100LA4**	**F804_451.5 P100 BX100LA4**	438
3.5	5338	0.9	403.5	35000	**F704_403.5 S3 ME3LA4**	**F704_403.5 S3 MX3LA4**	434	**F704_403.5 P100 BE100LA4**	**F704_403.5 P100 BX100LA4**	435
3.6	5186	2.7	392.0	55000	**F904_392.0 S3 ME3LA4**	**F904_392.0 S3 MX3LA4**	440	**F904_392.0 P100 BE100LA4**	**F904_392.0 P100 BX100LA4**	441
3.7	5069	1.6	383.2	45000	**F804_383.2 S3 ME3LA4**	**F804_383.2 S3 MX3LA4**	437	**F804_383.2 P100 BE100LA4**	**F804_383.2 P100 BX100LA4**	438
3.8	4928	1.0	372.5	35000	**F704_372.5 S3 ME3LA4**	**F704_372.5 S3 MX3LA4**	434	**F704_372.5 P100 BE100LA4**	**F704_372.5 P100 BX100LA4**	435
4.0	4787	2.9	361.8	55000	**F904_361.8 S3 ME3LA4**	**F904_361.8 S3 MX3LA4**	440	**F904_361.8 P100 BE100LA4**	**F904_361.8 P100 BX100LA4**	441
4.0	4679	1.7	353.7	45000	**F804_353.7 S3 ME3LA4**	**F804_353.7 S3 MX3LA4**	437	**F804_353.7 P100 BE100LA4**	**F804_353.7 P100 BX100LA4**	438
4.7	4027	1.2	304.3	35000	**F704_304.3 S3 ME3LA4**	**F704_304.3 S3 MX3LA4**	434	**F704_304.3 P100 BE100LA4**	**F704_304.3 P100 BX100LA4**	435
4.8	3926	2.0	296.7	45000	**F804_296.7 S3 ME3LA4**	**F804_296.7 S3 MX3LA4**	437	**F804_296.7 P100 BE100LA4**	**F804_296.7 P100 BX100LA4**	438
4.9	3852	3.6	291.1	55000	**F904_291.1 S3 ME3LA4**	**F904_291.1 S3 MX3LA4**	440	**F904_291.1 P100 BE100LA4**	**F904_291.1 P100 BX100LA4**	441
5.1	3717	1.3	280.9	35000	**F704_280.9 S3 ME3LA4**	**F704_280.9 S3 MX3LA4**	434	**F704_280.9 P100 BE100LA4**	**F704_280.9 P100 BX100LA4**	435
5.2	3624	2.2	273.9	45000	**F804_273.9 S3 ME3LA4**	**F804_273.9 S3 MX3LA4**	437	**F804_273.9 P100 BE100LA4**	**F804_273.9 P100 BX100LA4**	438
6.1	3223	0.9	235.8	20000	**F603_235.8 S3 ME3LA4**	**F603_235.8 S3 MX3LA4**	430	**F603_235.8 P100 BE100LA4**	**F603_235.8 P100 BX100LA4**	431

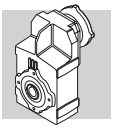

2.2 kW

n_2 min-1	M_2 Nm	S	i	R_{n2} N	IE2	IE3		IEC IE2	IEC IE3	
6.1	3103	1.6	234.6	35000	**F704_234.6 S3 ME3LA4**	**F704_234.6 S3 MX3LA4**	434	**F704_234.6 P100 BE100LA4**	**F704_234.6 P100 BX100LA4**	435
6.5	2891	2.8	218.5	45000	**F804_218.5 S3 ME3LA4**	**F804_218.5 S3 MX3LA4**	437	**F804_218.5 P100 BE100LA4**	**F804_218.5 P100 BX100LA4**	438
6.6	2975	1.0	217.6	20000	**F603_217.6 S3 ME3LA4**	**F603_217.6 S3 MX3LA4**	430	**F603_217.6 P100 BE100LA4**	**F603_217.6 P100 BX100LA4**	431
6.6	2865	1.7	216.5	35000	**F704_216.5 S3 ME3LA4**	**F704_216.5 S3 MX3LA4**	434	**F704_216.5 P100 BE100LA4**	**F704_216.5 P100 BX100LA4**	435
7.1	2753	1.1	201.4	20000	**F603_201.4 S3 ME3LA4**	**F603_201.4 S3 MX3LA4**	430	**F603_201.4 P100 BE100LA4**	**F603_201.4 P100 BX100LA4**	431
7.2	2734	2.9	200.0	45000	**F803_200.0 S3 ME3LA4**	**F803_200.0 S3 MX3LA4**	437	**F803_200.0 P100 BE100LA4**	**F803_200.0 P100 BX100LA4**	438
7.3	2680	1.9	196.0	35000	**F703_196.0 S3 ME3LA4**	**F703_196.0 S3 MX3LA4**	434	**F703_196.0 P100 BE100LA4**	**F703_196.0 P100 BX100LA4**	435
7.7	2541	1.1	185.9	20000	**F603_185.9 S3 ME3LA4**	**F603_185.9 S3 MX3LA4**	430	**F603_185.9 P100 BE100LA4**	**F603_185.9 P100 BX100LA4**	431
7.7	2524	3.2	184.6	45000	**F803_184.6 S3 ME3LA4**	**F803_184.6 S3 MX3LA4**	437	**F803_184.6 P100 BE100LA4**	**F803_184.6 P100 BX100LA4**	438
7.9	2474	2.0	180.9	35000	**F703_180.9 S3 ME3LA4**	**F703_180.9 S3 MX3LA4**	434	**F703_180.9 P100 BE100LA4**	**F703_180.9 P100 BX100LA4**	435
8.6	2279	2.2	166.7	35000	**F703_166.7 S3 ME3LA4**	**F703_166.7 S3 MX3LA4**	434	**F703_166.7 P100 BE100LA4**	**F703_166.7 P100 BX100LA4**	435
8.8	2227	1.3	162.9	20000	**F603_162.9 S3 ME3LA4**	**F603_162.9 S3 MX3LA4**	430	**F603_162.9 P100 BE100LA4**	**F603_162.9 P100 BX100LA4**	431
9.3	2103	2.4	153.8	35000	**F703_153.8 S3 ME3LA4**	**F703_153.8 S3 MX3LA4**	434	**F703_153.8 P100 BE100LA4**	**F703_153.8 P100 BX100LA4**	435
9.5	2056	1.4	150.4	20000	**F603_150.4 S3 ME3LA4**	**F603_150.4 S3 MX3LA4**	430	**F603_150.4 P100 BE100LA4**	**F603_150.4 P100 BX100LA4**	431
10.8	1818	2.8	133.0	35000	**F703_133.0 S3 ME3LA4**	**F703_133.0 S3 MX3LA4**	434	**F703_133.0 P100 BE100LA4**	**F703_133.0 P100 BX100LA4**	435
11.0	1784	1.6	130.5	20000	**F603_130.5 S3 ME3LA4**	**F603_130.5 S3 MX3LA4**	430	**F603_130.5 P100 BE100LA4**	**F603_130.5 P100 BX100LA4**	431
11.0	1776	1.0	129.9	12000	**F513_129.9 S3 ME3LA4**	**F513_129.9 S3 MX3LA4**	426	**F513_129.9 P100 BE100LA4**	**F513_129.9 P100 BX100LA4**	427
11.7	1678	3.0	122.7	35000	**F703_122.7 S3 ME3LA4**	**F703_122.7 S3 MX3LA4**	434	**F703_122.7 P100 BE100LA4**	**F703_122.7 P100 BX100LA4**	435
11.9	1647	1.8	120.5	20000	**F603_120.5 S3 ME3LA4**	**F603_120.5 S3 MX3LA4**	430	**F603_120.5 P100 BE100LA4**	**F603_120.5 P100 BX100LA4**	431
13.0	1499	3.3	109.6	35000	**F703_109.6 S3 ME3LA4**	**F703_109.6 S3 MX3LA4**	434	**F703_109.6 P100 BE100LA4**	**F703_109.6 P100 BX100LA4**	435
13.4	1454	2.0	106.4	20000	**F603_106.4 S3 ME3LA4**	**F603_106.4 S3 MX3LA4**	430	**F603_106.4 P100 BE100LA4**	**F603_106.4 P100 BX100LA4**	431
13.6	1437	1.3	105.1	12000	**F513_105.1 S3 ME3LA4**	**F513_105.1 S3 MX3LA4**	426	**F513_105.1 P100 BE100LA4**	**F513_105.1 P100 BX100LA4**	427
14.1	1383	3.6	101.2	35000	**F703_101.2 S3 ME3LA4**	**F703_101.2 S3 MX3LA4**	434	**F703_101.2 P100 BE100LA4**	**F703_101.2 P100 BX100LA4**	435
14.6	1342	2.2	98.2	20000	**F603_98.2 S3 ME3LA4**	**F603_98.2 S3 MX3LA4**	430	**F603_98.2 P100 BE100LA4**	**F603_98.2 P100 BX100LA4**	431
16.8	1160	0.9	84.9	8500	**F413_84.9 S3 ME3LA4**	**F413_84.9 S3 MX3LA4**	422	**F413_84.9 P100 BE100LA4**	**F413_84.9 P100 BX100LA4**	423
17.0	1149	2.5	84.0	20000	**F603_84.0 S3 ME3LA4**	**F603_84.0 S3 MX3LA4**	430	**F603_84.0 P100 BE100LA4**	**F603_84.0 P100 BX100LA4**	431
17.2	1138	1.6	83.2	12000	**F513_83.2 S3 ME3LA4**	**F513_83.2 S3 MX3LA4**	426	**F513_83.2 P100 BE100LA4**	**F513_83.2 P100 BX100LA4**	427
18.4	1060	2.7	77.6	20000	**F603_77.6 S3 ME3LA4**	**F603_77.6 S3 MX3LA4**	430	**F603_77.6 P100 BE100LA4**	**F603_77.6 P100 BX100LA4**	431
20.9	933	3.1	68.3	20000	**F603_68.3 S3 ME3LA4**	**F603_68.3 S3 MX3LA4**	430	**F603_68.3 P100 BE100LA4**	**F603_68.3 P100 BX100LA4**	431
21.5	909	1.2	66.5	8500	**F413_66.5 S3 ME3LA4**	**F413_66.5 S3 MX3LA4**	422	**F413_66.5 P100 BE100LA4**	**F413_66.5 P100 BX100LA4**	423
21.7	900	2.0	65.8	12000	**F513_65.8 S3 ME3LA4**	**F513_65.8 S3 MX3LA4**	426	**F513_65.8 P100 BE100LA4**	**F513_65.8 P100 BX100LA4**	427
22.7	862	3.4	63.0	20000	**F603_63.0 S3 ME3LA4**	**F603_63.0 S3 MX3LA4**	430	**F603_63.0 P100 BE100LA4**	**F603_63.0 P100 BX100LA4**	431
23.7	824	1.3	60.2	8500	**F413_60.2 S3 ME3LA4**	**F413_60.2 S3 MX3LA4**	422	**F413_60.2 P100 BE100LA4**	**F413_60.2 P100 BX100LA4**	423
27.8	704	1.5	51.5	8500	**F413_51.5 S3 ME3LA4**	**F413_51.5 S3 MX3LA4**	422	**F413_51.5 P100 BE100LA4**	**F413_51.5 P100 BX100LA4**	423
29.2	669	2.7	48.9	12000	**F513_48.9 S3 ME3LA4**	**F513_48.9 S3 MX3LA4**	426	**F513_48.9 P100 BE100LA4**	**F513_48.9 P100 BX100LA4**	427
29.8	669	1.6	47.9	8500	**F412_47.9 S3 ME3LA4**	**F412_47.9 S3 MX3LA4**	422	**F412_47.9 P100 BE100LA4**	**F412_47.9 P100 BX100LA4**	423
30	650	0.9	47.5	6500	**F313_47.5 S3 ME3LA4**	**F313_47.5 S3 MX3LA4**	418	**F313_47.5 P100 BE100LA4**	**F313_47.5 P100 BX100LA4**	419
32	623	1.0	44.6	6500	**F312_44.6 S3 ME3LA4**	**F312_44.6 S3 MX3LA4**	418	**F312_44.6 P100 BE100LA4**	**F312_44.6 P100 BX100LA4**	419
35	564	1.1	40.4	6500	**F312_40.4 S3 ME3LA4**	**F312_40.4 S3 MX3LA4**	418	**F312_40.4 P100 BE100LA4**	**F312_40.4 P100 BX100LA4**	419
37	533	2.1	38.2	8500	**F412_38.2 S3 ME3LA4**	**F412_38.2 S3 MX3LA4**	422	**F412_38.2 P100 BE100LA4**	**F412_38.2 P100 BX100LA4**	423
38	526	1.1	37.7	6500	**F312_37.7 S3 ME3LA4**	**F312_37.7 S3 MX3LA4**	418	**F312_37.7 P100 BE100LA4**	**F312_37.7 P100 BX100LA4**	419
39	519	3.3	37.1	12000	**F512_37.1 S3 ME3LA4**	**F512_37.1 S3 MX3LA4**	426	**F512_37.1 P100 BE100LA4**	**F512_37.1 P100 BX100LA4**	427
42	480	1.3	34.4	6490	**F312_34.4 S3 ME3LA4**	**F312_34.4 S3 MX3LA4**	418	**F312_34.4 P100 BE100LA4**	**F312_34.4 P100 BX100LA4**	419
44	449	0.9	32.2	3620	**F252_32.2 S3 ME3LA4**	**F252_32.2 S3 MX3LA4**	414	**F252_32.2 P100 BE100LA4**	**F252_32.2 P100 BX100LA4**	415
47	421	1.4	30.1	6360	**F312_30.1 S3 ME3LA4**	**F312_30.1 S3 MX3LA4**	418	**F312_30.1 P100 BE100LA4**	**F312_30.1 P100 BX100LA4**	419
47	421	2.6	30.1	8500	**F412_30.1 S3 ME3LA4**	**F412_30.1 S3 MX3LA4**	422	**F412_30.1 P100 BE100LA4**	**F412_30.1 P100 BX100LA4**	423
48	419	1.0	30.0	3300	**F252_30.0 S3 ME3LA4**	**F252_30.0 S3 MX3LA4**	414	**F252_30.0 P100 BE100LA4**	**F252_30.0 P100 BX100LA4**	415
52	381	1.6	27.3	6250	**F312_27.3 S3 ME3LA4**	**F312_27.3 S3 MX3LA4**	418	**F312_27.3 P100 BE100LA4**	**F312_27.3 P100 BX100LA4**	419
53	380	1.1	27.2	3300	**F252_27.2 S3 ME3LA4**	**F252_27.2 S3 MX3LA4**	414	**F252_27.2 P100 BE100LA4**	**F252_27.2 P100 BX100LA4**	415
59	337	3.3	24.1	8400	**F412_24.1 S3 ME3LA4**	**F412_24.1 S3 MX3LA4**	422	**F412_24.1 P100 BE100LA4**	**F412_24.1 P100 BX100LA4**	423
60	332	1.2	23.8	3290	**F252_23.8 S3 ME3LA4**	**F252_23.8 S3 MX3LA4**	414	**F252_23.8 P100 BE100LA4**	**F252_23.8 P100 BX100LA4**	415
61	327	1.8	23.4	6080	**F312_23.4 S3 ME3LA4**	**F312_23.4 S3 MX3LA4**	418	**F312_23.4 P100 BE100LA4**	**F312_23.4 P100 BX100LA4**	419
66	305	1.3	21.8	3270	**F252_21.8 S3 ME3LA4**	**F252_21.8 S3 MX3LA4**	414	**F252_21.8 P100 BE100LA4**	**F252_21.8 P100 BX100LA4**	415
68	295	2.0	21.1	5960	**F312_21.1 S3 ME3LA4**	**F312_21.1 S3 MX3LA4**	418	**F312_21.1 P100 BE100LA4**	**F312_21.1 P100 BX100LA4**	419
77	260	1.5	18.6	3220	**F252_18.6 S3 ME3LA4**	**F252_18.6 S3 MX3LA4**	414	**F252_18.6 P100 BE100LA4**	**F252_18.6 P100 BX100LA4**	415
77	258	2.3	18.5	5790	**F312_18.5 S3 ME3LA4**	**F312_18.5 S3 MX3LA4**	418	**F312_18.5 P100 BE100LA4**	**F312_18.5 P100 BX100LA4**	419
85	235	2.6	16.8	5670	**F312_16.8 S3 ME3LA4**	**F312_16.8 S3 MX3LA4**	418	**F312_16.8 P100 BE100LA4**	**F312_16.8 P100 BX100LA4**	419

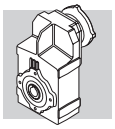

2.2 kW

n_2 min-1	M_2 Nm	S	i	R_{n2} N	IE2	IE3		IEC IE2	IEC IE3	
86	232	1.7	16.6	3180	**F252_16.6 S3 ME3LA4**	**F252_16.6 S3 MX3LA4**	414	**F252_16.6 P100 BE100LA4**	**F252_16.6 P100 BX100LA4**	415
97	207	1.0	14.8	2190	**F202_14.8 S3 ME3LA4**	**F202_14.8 S3 MX3LA4**	410	**F202_14.8 P100 BE100LA4**	**F202_14.8 P100 BX100LA4**	411
99	202	2.0	14.5	3120	**F252_14.5 S3 ME3LA4**	**F252_14.5 S3 MX3LA4**	414	**F252_14.5 P100 BE100LA4**	**F252_14.5 P100 BX100LA4**	415
103	195	3.1	13.9	5430	**F312_13.9 S3 ME3LA4**	**F312_13.9 S3 MX3LA4**	418	**F312_13.9 P100 BE100LA4**	**F312_13.9 P100 BX100LA4**	419
110	181	2.2	13.0	3070	**F252_13.0 S3 ME3LA4**	**F252_13.0 S3 MX3LA4**	414	**F252_13.0 P100 BE100LA4**	**F252_13.0 P100 BX100LA4**	415
112	178	3.4	12.7	5310	**F312_12.7 S3 ME3LA4**	**F312_12.7 S3 MX3LA4**	418	**F312_12.7 P100 BE100LA4**	**F312_12.7 P100 BX100LA4**	419
127	157	1.1	11.2	2060	**F202_11.2 S3 ME3LA4**	**F202_11.2 S3 MX3LA4**	410	**F202_11.2 P100 BE100LA4**	**F202_11.2 P100 BX100LA4**	411
135	148	2.7	10.6	2960	**F252_10.6 S3 ME3LA4**	**F252_10.6 S3 MX3LA4**	414	**F252_10.6 P100 BE100LA4**	**F252_10.6 P100 BX100LA4**	415
143	140	1.2	10.0	2000	**F202_10.0 S3 ME3LA4**	**F202_10.0 S3 MX3LA4**	410	**F202_10.0 P100 BE100LA4**	**F202_10.0 P100 BX100LA4**	411
153	131	2.0	9.4	2900	**F252_9.4 S3 ME3LA4**	**F252_9.4 S3 MX3LA4**	414	**F252_9.4 P100 BE100LA4**	**F252_9.4 P100 BX100LA4**	415
159	126	3.1	9.0	4830	**F312_9.0 S3 ME3LA4**	**F312_9.0 S3 MX3LA4**	418	**F312_9.0 P100 BE100LA4**	**F312_9.0 P100 BX100LA4**	419
164	122	1.3	8.7	1960	**F202_8.7 S3 ME3LA4**	**F202_8.7 S3 MX3LA4**	410	**F202_8.7 P100 BE100LA4**	**F202_8.7 P100 BX100LA4**	411
170	117	2.2	8.4	2830	**F252_8.4 S3 ME3LA4**	**F252_8.4 S3 MX3LA4**	414	**F252_8.4 P100 BE100LA4**	**F252_8.4 P100 BX100LA4**	415
174	115	3.4	8.2	4720	**F312_8.2 S3 ME3LA4**	**F312_8.2 S3 MX3LA4**	418	**F312_8.2 P100 BE100LA4**	**F312_8.2 P100 BX100LA4**	419
183	109	1.3	7.8	1920	**F202_7.8 S3 ME3LA4**	**F202_7.8 S3 MX3LA4**	410	**F202_7.8 P100 BE100LA4**	**F202_7.8 P100 BX100LA4**	411
208	96	2.7	6.9	2710	**F252_6.9 S3 ME3LA4**	**F252_6.9 S3 MX3LA4**	414	**F252_6.9 P100 BE100LA4**	**F252_6.9 P100 BX100LA4**	415
223	90	1.5	6.4	1840	**F202_6.4 S3 ME3LA4**	**F202_6.4 S3 MX3LA4**	410	**F202_6.4 P100 BE100LA4**	**F202_6.4 P100 BX100LA4**	411
248	80	1.0	11.5	1470	**F102_11.5 S3 ME3LA2**		406	**F102_11.5 P90 BE90L2**		407
255	78	1.8	11.2	1780	**F202_11.2 S3 ME3LA2**		410	**F202_11.2 P90 BE90L2**		411
293	68	1.1	9.8	1410	**F102_9.8 S3 ME3LA2**		406	**F102_9.8 P90 BE90L2**		407
328	61	2.0	8.7	1670	**F202_8.7 S3 ME3LA2**		410	**F202_8.7 P90 BE90L2**		411
334	60	1.1	8.6	1370	**F102_8.6 S3 ME3LA2**		406	**F102_8.6 P90 BE90L2**		407
366	55	2.1	7.8	1630	**F202_7.8 S3 ME3LA2**		410	**F202_7.8 P90 BE90L2**		411
387	52	1.2	7.4	1330	**F102_7.4 S3 ME3LA2**		406	**F102_7.4 P90 BE90L2**		407
447	45	2.3	6.4	1540	**F202_6.4 S3 ME3LA2**		410	**F202_6.4 P90 BE90L2**		411

3 kW

n_2 min-1	M_2 Nm	S	i	R_{n2} N	IE2	IE3		IEC IE2	IEC IE3	
1.9	13922	1.0	773.4	55000	**F904_773.4 S3 ME3LB4**	**F904_773.4 S3 MX3LB4**	440	**F904_773.4 P100 BE100LB4**	**F904_773.4 P100 BX100LB4**	441
2.0	12851	1.1	714.0	55000	**F904_714.0 S3 ME3LB4**	**F904_714.0 S3 MX3LB4**	440	**F904_714.0 P100 BE100LB4**	**F904_714.0 P100 BX100LB4**	441
2.3	11261	1.2	625.6	55000	**F904_625.6 S3 ME3LB4**	**F904_625.6 S3 MX3LB4**	440	**F904_625.6 P100 BE100LB4**	**F904_625.6 P100 BX100LB4**	441
2.5	10395	1.3	577.5	55000	**F904_577.5 S3 ME3LB4**	**F904_577.5 S3 MX3LB4**	440	**F904_577.5 P100 BE100LB4**	**F904_577.5 P100 BX100LB4**	441
2.9	8920	1.6	495.6	55000	**F904_495.6 S3 ME3LB4**	**F904_495.6 S3 MX3LB4**	440	**F904_495.6 P100 BE100LB4**	**F904_495.6 P100 BX100LB4**	441
2.9	8804	0.9	489.1	45000	**F804_489.1 S3 ME3LB4**	**F804_489.1 S3 MX3LB4**	437	**F804_489.1 P100 BE100LB4**	**F804_489.1 P100 BX100LB4**	438
3.1	8234	1.7	457.5	55000	**F904_457.5 S3 ME3LB4**	**F904_457.5 S3 MX3LB4**	440	**F904_457.5 P100 BE100LB4**	**F904_457.5 P100 BX100LB4**	441
3.2	8127	1.0	451.5	45000	**F804_451.5 S3 ME3LB4**	**F804_451.5 S3 MX3LB4**	437	**F804_451.5 P100 BE100LB4**	**F804_451.5 P100 BX100LB4**	438
3.7	7056	2.0	392.0	55000	**F904_392.0 S3 ME3LB4**	**F904_392.0 S3 MX3LB4**	440	**F904_392.0 P100 BE100LB4**	**F904_392.0 P100 BX100LB4**	441
3.8	6897	1.2	383.2	45000	**F804_383.2 S3 ME3LB4**	**F804_383.2 S3 MX3LB4**	437	**F804_383.2 P100 BE100LB4**	**F804_383.2 P100 BX100LB4**	438
4.0	6513	2.1	361.8	55000	**F904_361.8 S3 ME3LB4**	**F904_361.8 S3 MX3LB4**	440	**F904_361.8 P100 BE100LB4**	**F904_361.8 P100 BX100LB4**	441
4.1	6366	1.3	353.7	45000	**F804_353.7 S3 ME3LB4**	**F804_353.7 S3 MX3LB4**	437	**F804_353.7 P100 BE100LB4**	**F804_353.7 P100 BX100LB4**	438
4.7	5478	0.9	304.3	35000	**F704_304.3 S3 ME3LB4**	**F704_304.3 S3 MX3LB4**	434	**F704_304.3 P100 BE100LB4**	**F704_304.3 P100 BX100LB4**	435
4.9	5341	1.5	296.7	45000	**F804_296.7 S3 ME3LB4**	**F804_296.7 S3 MX3LB4**	437	**F804_296.7 P100 BE100LB4**	**F804_296.7 P100 BX100LB4**	438
4.9	5240	2.7	291.1	55000	**F904_291.1 S3 ME3LB4**	**F904_291.1 S3 MX3LB4**	440	**F904_291.1 P100 BE100LB4**	**F904_291.1 P100 BX100LB4**	441
5.1	5057	1.0	280.9	35000	**F704_280.9 S3 ME3LB4**	**F704_280.9 S3 MX3LB4**	434	**F704_280.9 P100 BE100LB4**	**F704_280.9 P100 BX100LB4**	435
5.3	4930	1.6	273.9	45000	**F804_273.9 S3 ME3LB4**	**F804_273.9 S3 MX3LB4**	437	**F804_273.9 P100 BE100LB4**	**F804_273.9 P100 BX100LB4**	438
5.4	4837	2.9	268.7	55000	**F904_268.7 S3 ME3LB4**	**F904_268.7 S3 MX3LB4**	440	**F904_268.7 P100 BE100LB4**	**F904_268.7 P100 BX100LB4**	441
6.1	4222	1.2	234.6	35000	**F704_234.6 S3 ME3LB4**	**F704_234.6 S3 MX3LB4**	434	**F704_234.6 P100 BE100LB4**	**F704_234.6 P100 BX100LB4**	435
6.2	4165	3.4	231.4	55000	**F904_231.4 S3 ME3LB4**	**F904_231.4 S3 MX3LB4**	440	**F904_231.4 P100 BE100LB4**	**F904_231.4 P100 BX100LB4**	441
6.6	3933	2.0	218.5	45000	**F804_218.5 S3 ME3LB4**	**F804_218.5 S3 MX3LB4**	437	**F804_218.5 P100 BE100LB4**	**F804_218.5 P100 BX100LB4**	438
6.7	3897	1.3	216.5	35000	**F704_216.5 S3 ME3LB4**	**F704_216.5 S3 MX3LB4**	434	**F704_216.5 P100 BE100LB4**	**F704_216.5 P100 BX100LB4**	435
6.7	3845	3.6	213.6	55000	**F904_213.6 S3 ME3LB4**	**F904_213.6 S3 MX3LB4**	440	**F904_213.6 P100 BE100LB4**	**F904_213.6 P100 BX100LB4**	441
7.2	3720	2.2	200.0	45000	**F803_200.0 S3 ME3LB4**	**F803_200.0 S3 MX3LB4**	437	**F803_200.0 P100 BE100LB4**	**F803_200.0 P100 BX100LB4**	438
7.3	3646	1.4	196.0	35000	**F703_196.0 S3 ME3LB4**	**F703_196.0 S3 MX3LB4**	434	**F703_196.0 P100 BE100LB4**	**F703_196.0 P100 BX100LB4**	435
7.8	3434	2.3	184.6	45000	**F803_184.6 S3 ME3LB4**	**F803_184.6 S3 MX3LB4**	437	**F803_184.6 P100 BE100LB4**	**F803_184.6 P100 BX100LB4**	438
8.0	3366	1.5	180.9	35000	**F703_180.9 S3 ME3LB4**	**F703_180.9 S3 MX3LB4**	434	**F703_180.9 P100 BE100LB4**	**F703_180.9 P100 BX100LB4**	435

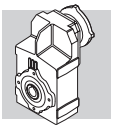

3 kW

n_2	M_2	S	i	R_{n2}	IE2	IE3		IEC IE2	IEC IE3	
min-1	Nm			N						
8.6	3100	1.6	166.7	35000	**F703_166.7 S3 ME3LB4**	**F703_166.7 S3 MX3LB4**	434	**F703_166.7 P100 BE100LB4**	**F703_166.7 P100 BX100LB4**	435
8.8	3030	1.0	162.9	20000	**F603_162.9 S3 ME3LB4**	**F603_162.9 S3 MX3LB4**	430	**F603_162.9 P100 BE100LB4**	**F603_162.9 P100 BX100LB4**	431
9.0	2980	2.7	160.2	45000	**F803_160.2 S3 ME3LB4**	**F803_160.2 S3 MX3LB4**	437	**F803_160.2 P100 BE100LB4**	**F803_160.2 P100 BX100LB4**	438
9.4	2862	1.7	153.8	35000	**F703_153.8 S3 ME3LB4**	**F703_153.8 S3 MX3LB4**	434	**F703_153.8 P100 BE100LB4**	**F703_153.8 P100 BX100LB4**	435
9.6	2797	1.0	150.4	20000	**F603_150.4 S3 ME3LB4**	**F603_150.4 S3 MX3LB4**	430	**F603_150.4 P100 BE100LB4**	**F603_150.4 P100 BX100LB4**	431
9.7	2751	2.9	147.9	45000	**F803_147.9 S3 ME3LB4**	**F803_147.9 S3 MX3LB4**	437	**F803_147.9 P100 BE100LB4**	**F803_147.9 P100 BX100LB4**	438
10.8	2473	2.0	133.0	35000	**F703_133.0 S3 ME3LB4**	**F703_133.0 S3 MX3LB4**	434	**F703_133.0 P100 BE100LB4**	**F703_133.0 P100 BX100LB4**	435
10.9	2468	3.2	132.7	45000	**F803_132.7 S3 ME3LB4**	**F803_132.7 S3 MX3LB4**	437	**F803_132.7 P100 BE100LB4**	**F803_132.7 P100 BX100LB4**	438
11.0	2427	1.2	130.5	20000	**F603_130.5 S3 ME3LB4**	**F603_130.5 S3 MX3LB4**	430	**F603_130.5 P100 BE100LB4**	**F603_130.5 P100 BX100LB4**	431
11.7	2283	2.2	122.7	35000	**F703_122.7 S3 ME3LB4**	**F703_122.7 S3 MX3LB4**	434	**F703_122.7 P100 BE100LB4**	**F703_122.7 P100 BX100LB4**	435
12.0	2240	1.3	120.5	20000	**F603_120.5 S3 ME3LB4**	**F603_120.5 S3 MX3LB4**	430	**F603_120.5 P100 BE100LB4**	**F603_120.5 P100 BX100LB4**	431
13.1	2039	2.5	109.6	35000	**F703_109.6 S3 ME3LB4**	**F703_109.6 S3 MX3LB4**	434	**F703_109.6 P100 BE100LB4**	**F703_109.6 P100 BX100LB4**	435
13.5	1979	1.5	106.4	20000	**F603_106.4 S3 ME3LB4**	**F603_106.4 S3 MX3LB4**	430	**F603_106.4 P100 BE100LB4**	**F603_106.4 P100 BX100LB4**	431
13.7	1955	0.9	105.1	12000	**F513_105.1 S3 ME3LB4**	**F513_105.1 S3 MX3LB4**	426	**F513_105.1 P100 BE100LB4**	**F513_105.1 P100 BX100LB4**	427
14.2	1882	2.7	101.2	35000	**F703_101.2 S3 ME3LB4**	**F703_101.2 S3 MX3LB4**	434	**F703_101.2 P100 BE100LB4**	**F703_101.2 P100 BX100LB4**	435
14.7	1826	1.6	98.2	20000	**F603_98.2 S3 ME3LB4**	**F603_98.2 S3 MX3LB4**	430	**F603_98.2 P100 BE100LB4**	**F603_98.2 P100 BX100LB4**	431
15.6	1721	2.9	92.5	35000	**F703_92.5 S3 ME3LB4**	**F703_92.5 S3 MX3LB4**	434	**F703_92.5 P100 BE100LB4**	**F703_92.5 P100 BX100LB4**	435
16.9	1588	3.1	85.4	35000	**F703_85.4 S3 ME3LB4**	**F703_85.4 S3 MX3LB4**	434	**F703_85.4 P100 BE100LB4**	**F703_85.4 P100 BX100LB4**	435
17.1	1563	1.9	84.0	20000	**F603_84.0 S3 ME3LB4**	**F603_84.0 S3 MX3LB4**	430	**F603_84.0 P100 BE100LB4**	**F603_84.0 P100 BX100LB4**	431
17.3	1548	1.2	83.2	12000	**F513_83.2 S3 ME3LB4**	**F513_83.2 S3 MX3LB4**	426	**F513_83.2 P100 BE100LB4**	**F513_83.2 P100 BX100LB4**	427
18.6	1443	2.0	77.6	20000	**F603_77.6 S3 ME3LB4**	**F603_77.6 S3 MX3LB4**	430	**F603_77.6 P100 BE100LB4**	**F603_77.6 P100 BX100LB4**	431
19.6	1368	3.7	73.6	35000	**F703_73.6 S3 ME3LB4**	**F703_73.6 S3 MX3LB4**	434	**F703_73.6 P100 BE100LB4**	**F703_73.6 P100 BX100LB4**	435
21.1	1270	2.3	68.3	20000	**F603_68.3 S3 ME3LB4**	**F603_68.3 S3 MX3LB4**	430	**F603_68.3 P100 BE100LB4**	**F603_68.3 P100 BX100LB4**	431
21.9	1225	1.5	65.8	12000	**F513_65.8 S3 ME3LB4**	**F513_65.8 S3 MX3LB4**	426	**F513_65.8 P100 BE100LB4**	**F513_65.8 P100 BX100LB4**	427
22.8	1172	2.5	63.0	20000	**F603_63.0 S3 ME3LB4**	**F603_63.0 S3 MX3LB4**	430	**F603_63.0 P100 BE100LB4**	**F603_63.0 P100 BX100LB4**	431
23.9	1121	1.0	60.2	8500	**F413_60.2 S3 ME3LB4**	**F413_60.2 S3 MX3LB4**	422	**F413_60.2 P100 BE100LB4**	**F413_60.2 P100 BX100LB4**	423
27.8	964	3.0	51.8	20000	**F603_51.8 S3 ME3LB4**	**F603_51.8 S3 MX3LB4**	430	**F603_51.8 P100 BE100LB4**	**F603_51.8 P100 BX100LB4**	431
28.0	958	1.1	51.5	8500	**F413_51.5 S3 ME3LB4**	**F413_51.5 S3 MX3LB4**	422	**F413_51.5 P100 BE100LB4**	**F413_51.5 P100 BX100LB4**	423
29.4	910	2.0	48.9	12000	**F513_48.9 S3 ME3LB4**	**F513_48.9 S3 MX3LB4**	426	**F513_48.9 P100 BE100LB4**	**F513_48.9 P100 BX100LB4**	427
30	911	1.2	47.9	8500	**F412_47.9 S3 ME3LB4**	**F412_47.9 S3 MX3LB4**	422	**F412_47.9 P100 BE100LB4**	**F412_47.9 P100 BX100LB4**	423
30	890	3.3	47.8	20000	**F603_47.8 S3 ME3LB4**	**F603_47.8 S3 MX3LB4**	430	**F603_47.8 P100 BE100LB4**	**F603_47.8 P100 BX100LB4**	431
38	725	1.5	38.2	8500	**F412_38.2 S3 ME3LB4**	**F412_38.2 S3 MX3LB4**	422	**F412_38.2 P100 BE100LB4**	**F412_38.2 P100 BX100LB4**	423
39	706	2.4	37.1	11800	**F512_37.1 S3 ME3LB4**	**F512_37.1 S3 MX3LB4**	426	**F512_37.1 P100 BE100LB4**	**F512_37.1 P100 BX100LB4**	427
42	653	0.9	34.4	5810	**F312_34.4 S3 ME3LB4**	**F312_34.4 S3 MX3LB4**	418	**F312_34.4 P100 BE100LB4**	**F312_34.4 P100 BX100LB4**	419
48	572	1.0	30.1	5770	**F312_30.1 S3 ME3LB4**	**F312_30.1 S3 MX3LB4**	418	**F312_30.1 P100 BE100LB4**	**F312_30.1 P100 BX100LB4**	419
48	572	1.9	30.1	8290	**F412_30.1 S3 ME3LB4**	**F412_30.1 S3 MX3LB4**	422	**F412_30.1 P100 BE100LB4**	**F412_30.1 P100 BX100LB4**	423
48	571	3.0	30.0	11200	**F512_30.0 S3 ME3LB4**	**F512_30.0 S3 MX3LB4**	426	**F512_30.0 P100 BE100LB4**	**F512_30.0 P100 BX100LB4**	427
53	518	1.2	27.3	5720	**F312_27.3 S3 ME3LB4**	**F312_27.3 S3 MX3LB4**	418	**F312_27.3 P100 BE100LB4**	**F312_27.3 P100 BX100LB4**	419
60	458	2.4	24.1	7960	**F412_24.1 S3 ME3LB4**	**F412_24.1 S3 MX3LB4**	422	**F412_24.1 P100 BE100LB4**	**F412_24.1 P100 BX100LB4**	423
61	451	0.9	23.8	3100	**F252_23.8 S3 ME3LB4**	**F252_23.8 S3 MX3LB4**	414	**F252_23.8 P100 BE100LB4**	**F252_23.8 P100 BX100LB4**	415
62	444	1.4	23.4	5620	**F312_23.4 S3 ME3LB4**	**F312_23.4 S3 MX3LB4**	418	**F312_23.4 P100 BE100LB4**	**F312_23.4 P100 BX100LB4**	419
66	415	1.0	21.8	2800	**F252_21.8 S3 ME3LB4**	**F252_21.8 S3 MX3LB4**	414	**F252_21.8 P100 BE100LB4**	**F252_21.8 P100 BX100LB4**	415
68	401	1.5	21.1	5540	**F312_21.1 S3 ME3LB4**	**F312_21.1 S3 MX3LB4**	418	**F312_21.1 P100 BE100LB4**	**F312_21.1 P100 BX100LB4**	419
76	359	3.0	18.9	7560	**F412_18.9 S3 ME3LB4**	**F412_18.9 S3 MX3LB4**	422	**F412_18.9 P100 BE100LB4**	**F412_18.9 P100 BX100LB4**	423
77	354	1.1	18.6	2830	**F252_18.6 S3 ME3LB4**	**F252_18.6 S3 MX3LB4**	414	**F252_18.6 P100 BE100LB4**	**F252_18.6 P100 BX100LB4**	415
78	351	1.7	18.5	5430	**F312_18.5 S3 ME3LB4**	**F312_18.5 S3 MX3LB4**	418	**F312_18.5 P100 BE100LB4**	**F312_18.5 P100 BX100LB4**	419
84	325	3.2	17.1	7400	**F412_17.1 S3 ME3LB4**	**F412_17.1 S3 MX3LB4**	422	**F412_17.1 P100 BE100LB4**	**F412_17.1 P100 BX100LB4**	423
86	319	1.9	16.8	5340	**F312_16.8 S3 ME3LB4**	**F312_16.8 S3 MX3LB4**	418	**F312_16.8 P100 BE100LB4**	**F312_16.8 P100 BX100LB4**	419
87	316	1.3	16.6	2830	**F252_16.6 S3 ME3LB4**	**F252_16.6 S3 MX3LB4**	414	**F252_16.6 P100 BE100LB4**	**F252_16.6 P100 BX100LB4**	415
100	275	1.5	14.5	2810	**F252_14.5 S3 ME3LB4**	**F252_14.5 S3 MX3LB4**	414	**F252_14.5 P100 BE100LB4**	**F252_14.5 P100 BX100LB4**	415
103	265	2.3	13.9	5150	**F312_13.9 S3 ME3LB4**	**F312_13.9 S3 MX3LB4**	418	**F312_13.9 P100 BE100LB4**	**F312_13.9 P100 BX100LB4**	419
111	247	1.6	13.0	2790	**F252_13.0 S3 ME3LB4**	**F252_13.0 S3 MX3LB4**	414	**F252_13.0 P100 BE100LB4**	**F252_13.0 P100 BX100LB4**	415
113	242	2.5	12.7	5060	**F312_12.7 S3 ME3LB4**	**F312_12.7 S3 MX3LB4**	418	**F312_12.7 P100 BE100LB4**	**F312_12.7 P100 BX100LB4**	419
134	204	2.9	10.7	4880	**F312_10.7 S3 ME3LB4**	**F312_10.7 S3 MX3LB4**	418	**F312_10.7 P100 BE100LB4**	**F312_10.7 P100 BX100LB4**	419
136	202	2.0	10.6	2730	**F252_10.6 S3 ME3LB4**	**F252_10.6 S3 MX3LB4**	414	**F252_10.6 P100 BE100LB4**	**F252_10.6 P100 BX100LB4**	415
154	178	1.5	9.4	2710	**F252_9.4 S3 ME3LB4**	**F252_9.4 S3 MX3LB4**	414	**F252_9.4 P100 BE100LB4**	**F252_9.4 P100 BX100LB4**	415
160	171	2.3	9.0	4650	**F312_9.0 S3 ME3LB4**	**F312_9.0 S3 MX3LB4**	418	**F312_9.0 P100 BE100LB4**	**F312_9.0 P100 BX100LB4**	419
165	166	0.9	8.7	1820	**F202_8.7 S3 ME3LB4**	**F202_8.7 S3 MX3LB4**	410	**F202_8.7 P100 BE100LB4**	**F202_8.7 P100 BX100LB4**	411
172	159	1.6	8.4	2660	**F252_8.4 S3 ME3LB4**	**F252_8.4 S3 MX3LB4**	414	**F252_8.4 P100 BE100LB4**	**F252_8.4 P100 BX100LB4**	415
175	156	2.5	8.2	4550	**F312_8.2 S3 ME3LB4**	**F312_8.2 S3 MX3LB4**	418	**F312_8.2 P100 BE100LB4**	**F312_8.2 P100 BX100LB4**	419
184	149	1.0	7.8	1790	**F202_7.8 S3 ME3LB4**	**F202_7.8 S3 MX3LB4**	410	**F202_7.8 P100 BE100LB4**	**F202_7.8 P100 BX100LB4**	411
207	132	3.0	6.9	4360	**F312_6.9 S3 ME3LB4**	**F312_6.9 S3 MX3LB4**	418	**F312_6.9 P100 BE100LB4**	**F312_6.9 P100 BX100LB4**	419
210	131	2.0	6.9	2560	**F252_6.9 S3 ME3LB4**	**F252_6.9 S3 MX3LB4**	414	**F252_6.9 P100 BE100LB4**	**F252_6.9 P100 BX100LB4**	415
222	123	2.9	13.0	2510	**F252_13.0 S3 ME3LB2**		414	**F252_13.0 P100 BE100L2**		415
225	122	1.1	6.4	1730	**F202_6.4 S3 ME3LB4**	**F202_6.4 S3 MX3LB4**	410	**F202_6.4 P100 BE100LB4**	**F202_6.4 P100 BX100LB4**	411

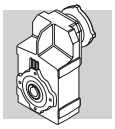

3 kW

n_2 min-1	M_2 Nm	S	i	R_{n2} N	IE2	IE3		IEC IE2	IEC IE3	
256	106	1.3	11.2	1680	**F202_11.2 S3 ME3LB2**		410	**F202_11.2 P100 BE100L2**		411
271	100	3.2	10.6	2410	**F252_10.6 S3 ME3LB2**		414	**F252_10.6 P100 BE100L2**		415
308	88	3.0	9.4	2350	**F252_9.4 S3 ME3LB2**		414	**F252_9.4 P100 BE100L2**		415
330	83	1.5	8.7	1600	**F202_8.7 S3 ME3LB2**		410	**F202_8.7 P100 BE100L2**		411
343	79	3.3	8.4	2290	**F252_8.4 S3 ME3LB2**		414	**F252_8.4 P100 BE100L2**		415
368	74	1.6	7.8	1560	**F202_7.8 S3 ME3LB2**		410	**F202_7.8 P100 BE100L2**		411
449	61	1.7	6.4	1480	**F202_6.4 S3 ME3LB2**		410	**F202_6.4 P100 BE100L2**		411

4 kW

n_2 min-1	M_2 Nm	S	i	R_{n2} N	IE2	IE3		IEC IE2	IEC IE3	
2.3	15202	0.9	625.6	55000	**F904_625.6 S4 ME4SA4**	**F904_625.6 S4 MX4SA4**	440	**F904_625.6 P112 BE112M4**	**F904_625.6 P112 BX112M4**	441
2.5	14033	1.0	577.5	55000	**F904_577.5 S4 ME4SA4**	**F904_577.5 S4 MX4SA4**	440	**F904_577.5 P112 BE112M4**	**F904_577.5 P112 BX112M4**	441
2.9	12042	1.2	495.6	55000	**F904_495.6 S4 ME4SA4**	**F904_495.6 S4 MX4SA4**	440	**F904_495.6 P112 BE112M4**	**F904_495.6 P112 BX112M4**	441
3.1	11116	1.3	457.5	55000	**F904_457.5 S4 ME4SA4**	**F904_457.5 S4 MX4SA4**	440	**F904_457.5 P112 BE112M4**	**F904_457.5 P112 BX112M4**	441
3.7	9526	1.5	392.0	55000	**F904_392.0 S4 ME4SA4**	**F904_392.0 S4 MX4SA4**	440	**F904_392.0 P112 BE112M4**	**F904_392.0 P112 BX112M4**	441
4.0	8793	1.6	361.8	55000	**F904_361.8 S4 ME4SA4**	**F904_361.8 S4 MX4SA4**	440	**F904_361.8 P112 BE112M4**	**F904_361.8 P112 BX112M4**	441
4.1	8594	0.9	353.7	45000	**F804_353.7 S4 ME4SA4**	**F804_353.7 S4 MX4SA4**	437	**F804_353.7 P112 BE112M4**	**F804_353.7 P112 BX112M4**	438
4.9	7210	1.1	296.7	45000	**F804_296.7 S4 ME4SA4**	**F804_296.7 S4 MX4SA4**	437	**F804_296.7 P112 BE112M4**	**F804_296.7 P112 BX112M4**	438
4.9	7074	2.0	291.1	55000	**F904_291.1 S4 ME4SA4**	**F904_291.1 S4 MX4SA4**	440	**F904_291.1 P112 BE112M4**	**F904_291.1 P112 BX112M4**	441
5.3	6656	1.2	273.9	45000	**F804_273.9 S4 ME4SA4**	**F804_273.9 S4 MX4SA4**	437	**F804_273.9 P112 BE112M4**	**F804_273.9 P112 BX112M4**	438
5.4	6530	2.1	268.7	55000	**F904_268.7 S4 ME4SA4**	**F904_268.7 S4 MX4SA4**	440	**F904_268.7 P112 BE112M4**	**F904_268.7 P112 BX112M4**	441
6.1	5700	0.9	234.6	35000	**F704_234.6 S4 ME4SA4**	**F704_234.6 S4 MX4SA4**	434	**F704_234.6 P112 BE112M4**	**F704_234.6 P112 BX112M4**	435
6.2	5623	2.5	231.4	55000	**F904_231.4 S4 ME4SA4**	**F904_231.4 S4 MX4SA4**	440	**F904_231.4 P112 BE112M4**	**F904_231.4 P112 BX112M4**	441
6.6	5309	1.5	218.5	45000	**F804_218.5 S4 ME4SA4**	**F804_218.5 S4 MX4SA4**	437	**F804_218.5 P112 BE112M4**	**F804_218.5 P112 BX112M4**	438
6.7	5262	1.0	216.5	35000	**F704_216.5 S4 ME4SA4**	**F704_216.5 S4 MX4SA4**	434	**F704_216.5 P112 BE112M4**	**F704_216.5 P112 BX112M4**	435
6.7	5190	2.7	213.6	55000	**F904_213.6 S4 ME4SA4**	**F904_213.6 S4 MX4SA4**	440	**F904_213.6 P112 BE112M4**	**F904_213.6 P112 BX112M4**	441
7.2	5022	1.6	200.0	45000	**F803_200.0 S4 ME4SA4**	**F803_200.0 S4 MX4SA4**	437	**F803_200.0 P112 BE112M4**	**F803_200.0 P112 BX112M4**	438
7.3	4922	1.0	196.0	35000	**F703_196.0 S4 ME4SA4**	**F703_196.0 S4 MX4SA4**	434	**F703_196.0 P112 BE112M4**	**F703_196.0 P112 BX112M4**	435
7.4	4875	2.9	194.2	55000	**F903_194.2 S4 ME4SA4**	**F903_194.2 S4 MX4SA4**	440	**F903_194.2 P112 BE112M4**	**F903_194.2 P112 BX112M4**	441
7.8	4636	1.7	184.6	45000	**F803_184.6 S4 ME4SA4**	**F803_184.6 S4 MX4SA4**	437	**F803_184.6 P112 BE112M4**	**F803_184.6 P112 BX112M4**	438
8.0	4544	1.1	180.9	35000	**F703_180.9 S4 ME4SA4**	**F703_180.9 S4 MX4SA4**	434	**F703_180.9 P112 BE112M4**	**F703_180.9 P112 BX112M4**	435
8.0	4500	3.1	179.2	55000	**F903_179.2 S4 ME4SA4**	**F903_179.2 S4 MX4SA4**	440	**F903_179.2 P112 BE112M4**	**F903_179.2 P112 BX112M4**	441
8.6	4185	1.2	166.7	35000	**F703_166.7 S4 ME4SA4**	**F703_166.7 S4 MX4SA4**	434	**F703_166.7 P112 BE112M4**	**F703_166.7 P112 BX112M4**	435
8.8	4089	3.4	162.8	55000	**F903_162.8 S4 ME4SA4**	**F903_162.8 S4 MX4SA4**	440	**F903_162.8 P112 BE112M4**	**F903_162.8 P112 BX112M4**	441
9.0	4023	2.0	160.2	45000	**F803_160.2 S4 ME4SA4**	**F803_160.2 S4 MX4SA4**	437	**F803_160.2 P112 BE112M4**	**F803_160.2 P112 BX112M4**	438
9.4	3863	1.3	153.8	35000	**F703_153.8 S4 ME4SA4**	**F703_153.8 S4 MX4SA4**	434	**F703_153.8 P112 BE112M4**	**F703_153.8 P112 BX112M4**	435
9.7	3714	2.2	147.9	45000	**F803_147.9 S4 ME4SA4**	**F803_147.9 S4 MX4SA4**	437	**F803_147.9 P112 BE112M4**	**F803_147.9 P112 BX112M4**	438
10.8	3338	1.5	133.0	35000	**F703_133.0 S4 ME4SA4**	**F703_133.0 S4 MX4SA4**	434	**F703_133.0 P112 BE112M4**	**F703_133.0 P112 BX112M4**	435
10.9	3332	2.4	132.7	45000	**F803_132.7 S4 ME4SA4**	**F803_132.7 S4 MX4SA4**	437	**F803_132.7 P112 BE112M4**	**F803_132.7 P112 BX112M4**	438
11.0	3277	0.9	130.5	20000	**F603_130.5 S4 ME4SA4**	**F603_130.5 S4 MX4SA4**	430	**F603_130.5 P112 BE112M4**	**F603_130.5 P112 BX112M4**	431
11.7	3082	1.6	122.7	35000	**F703_122.7 S4 ME4SA4**	**F703_122.7 S4 MX4SA4**	434	**F703_122.7 P112 BE112M4**	**F703_122.7 P112 BX112M4**	435
11.8	3076	2.6	122.5	45000	**F803_122.5 S4 ME4SA4**	**F803_122.5 S4 MX4SA4**	437	**F803_122.5 P112 BE112M4**	**F803_122.5 P112 BX112M4**	438
12.0	3025	1.0	120.5	20000	**F603_120.5 S4 ME4SA4**	**F603_120.5 S4 MX4SA4**	430	**F603_120.5 P112 BE112M4**	**F603_120.5 P112 BX112M4**	431
12.7	2856	2.8	113.8	45000	**F803_113.8 S4 ME4SA4**	**F803_113.8 S4 MX4SA4**	437	**F803_113.8 P112 BE112M4**	**F803_113.8 P112 BX112M4**	438
13.1	2752	1.8	109.6	35000	**F703_109.6 S4 ME4SA4**	**F703_109.6 S4 MX4SA4**	434	**F703_109.6 P112 BE112M4**	**F703_109.6 P112 BX112M4**	435
13.5	2671	1.1	106.4	20000	**F603_106.4 S4 ME4SA4**	**F603_106.4 S4 MX4SA4**	430	**F603_106.4 P112 BE112M4**	**F603_106.4 P112 BX112M4**	431
13.7	2637	3.0	105.0	45000	**F803_105.0 S4 ME4SA4**	**F803_105.0 S4 MX4SA4**	437	**F803_105.0 P112 BE112M4**	**F803_105.0 P112 BX112M4**	438
14.2	2541	2.0	101.2	35000	**F703_101.2 S4 ME4SA4**	**F703_101.2 S4 MX4SA4**	434	**F703_101.2 P112 BE112M4**	**F703_101.2 P112 BX112M4**	435
14.7	2466	1.2	98.2	20000	**F603_98.2 S4 ME4SA4**	**F603_98.2 S4 MX4SA4**	430	**F603_98.2 P112 BE112M4**	**F603_98.2 P112 BX112M4**	431
15.6	2323	2.2	92.5	35000	**F703_92.5 S4 ME4SA4**	**F703_92.5 S4 MX4SA4**	434	**F703_92.5 P112 BE112M4**	**F703_92.5 P112 BX112M4**	435
16.9	2144	2.3	85.4	35000	**F703_85.4 S4 ME4SA4**	**F703_85.4 S4 MX4SA4**	434	**F703_85.4 P112 BE112M4**	**F703_85.4 P112 BX112M4**	435
17.1	2110	1.4	84.0	20000	**F603_84.0 S4 ME4SA4**	**F603_84.0 S4 MX4SA4**	430	**F603_84.0 P112 BE112M4**	**F603_84.0 P112 BX112M4**	431
18.6	1947	1.5	77.6	20000	**F603_77.6 S4 ME4SA4**	**F603_77.6 S4 MX4SA4**	430	**F603_77.6 P112 BE112M4**	**F603_77.6 P112 BX112M4**	431
19.6	1847	2.7	73.6	35000	**F703_73.6 S4 ME4SA4**	**F703_73.6 S4 MX4SA4**	434	**F703_73.6 P112 BE112M4**	**F703_73.6 P112 BX112M4**	435
21.1	1715	1.7	68.3	20000	**F603_68.3 S4 ME4SA4**	**F603_68.3 S4 MX4SA4**	430	**F603_68.3 P112 BE112M4**	**F603_68.3 P112 BX112M4**	431
21.2	1705	2.9	67.9	35000	**F703_67.9 S4 ME4SA4**	**F703_67.9 S4 MX4SA4**	434	**F703_67.9 P112 BE112M4**	**F703_67.9 P112 BX112M4**	435
21.9	1653	1.1	65.8	12000	**F513_65.8 S4 ME4SA4**	**F513_65.8 S4 MX4SA4**	426	**F513_65.8 P112 BE112M4**	**F513_65.8 P112 BX112M4**	427
22.8	1583	1.8	63.0	20000	**F603_63.0 S4 ME4SA4**	**F603_63.0 S4 MX4SA4**	430	**F603_63.0 P112 BE112M4**	**F603_63.0 P112 BX112M4**	431

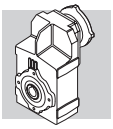

4 kW

n_2 min-1	M_2 Nm	S	i	R_{n2} N	IE2	IE3		IEC IE2	IEC IE3	
23.0	1569	3.2	62.5	35000	**F703_62.5 S4 ME4SA4**	**F703_62.5 S4 MX4SA4**	434	**F703_62.5 P112 BE112M4**	**F703_62.5 P112 BX112M4**	435
25.0	1449	3.5	57.7	35000	**F703_57.7 S4 ME4SA4**	**F703_57.7 S4 MX4SA4**	434	**F703_57.7 P112 BE112M4**	**F703_57.7 P112 BX112M4**	435
27.8	1301	2.2	51.8	20000	**F603_51.8 S4 ME4SA4**	**F603_51.8 S4 MX4SA4**	430	**F603_51.8 P112 BE112M4**	**F603_51.8 P112 BX112M4**	431
29.4	1228	1.5	48.9	11600	**F513_48.9 S4 ME4SA4**	**F513_48.9 S4 MX4SA4**	426	**F513_48.9 P112 BE112M4**	**F513_48.9 P112 BX112M4**	427
30	1201	2.4	47.8	20000	**F603_47.8 S4 ME4SA4**	**F603_47.8 S4 MX4SA4**	430	**F603_47.8 P112 BE112M4**	**F603_47.8 P112 BX112M4**	431
34	1057	2.7	42.1	20000	**F603_42.1 S4 ME4SA4**	**F603_42.1 S4 MX4SA4**	430	**F603_42.1 P112 BE112M4**	**F603_42.1 P112 BX112M4**	431
37	975	3.0	38.8	20000	**F603_38.8 S4 ME4SA4**	**F603_38.8 S4 MX4SA4**	430	**F603_38.8 P112 BE112M4**	**F603_38.8 P112 BX112M4**	431
38	979	1.1	38.2	7720	**F412_38.2 S4 ME4SA4**	**F412_38.2 S4 MX4SA4**	422	**F412_38.2 P112 BE112M4**	**F412_38.2 P112 BX112M4**	423
39	953	1.8	37.1	11200	**F512_37.1 S4 ME4SA4**	**F512_37.1 S4 MX4SA4**	426	**F512_37.1 P112 BE112M4**	**F512_37.1 P112 BX112M4**	427
45	806	3.6	32.1	20000	**F603_32.1 S4 ME4SA4**	**F603_32.1 S4 MX4SA4**	430			
48	773	1.4	30.1	7610	**F412_30.1 S4 ME4SA4**	**F412_30.1 S4 MX4SA4**	422	**F412_30.1 P112 BE112M4**	**F412_30.1 P112 BX112M4**	423
48	770	2.2	30.0	10700	**F512_30.0 S4 ME4SA4**	**F512_30.0 S4 MX4SA4**	426	**F512_30.0 P112 BE112M4**	**F512_30.0 P112 BX112M4**	427
57	638	3.0	25.4	20000	**F603_25.4 S4 ME4SA4**	**F603_25.4 S4 MX4SA4**	430	**F603_25.4 P112 BE112M4**	**F603_25.4 P112 BX112M4**	431
60	619	1.8	24.1	7420	**F412_24.1 S4 ME4SA4**	**F412_24.1 S4 MX4SA4**	422	**F412_24.1 P112 BE112M4**	**F412_24.1 P112 BX112M4**	423
61	610	2.7	23.8	10200	**F512_23.8 S4 ME4SA4**	**F512_23.8 S4 MX4SA4**	426	**F512_23.8 P112 BE112M4**	**F512_23.8 P112 BX112M4**	427
61	589	3.2	23.5	20000	**F603_23.5 S4 ME4SA4**	**F603_23.5 S4 MX4SA4**	430	**F603_23.5 P112 BE112M4**	**F603_23.5 P112 BX112M4**	431
62	600	1.0	23.4	5040	**F312_23.4 S4 ME4SA4**	**F312_23.4 S4 MX4SA4**	418	**F312_23.4 P112 BE112M4**	**F312_23.4 P112 BX112M4**	419
68	542	1.1	21.1	5020	**F312_21.1 S4 ME4SA4**	**F312_21.1 S4 MX4SA4**	418	**F312_21.1 P112 BE112M4**	**F312_21.1 P112 BX112M4**	419
76	485	2.2	18.9	7150	**F412_18.9 S4 ME4SA4**	**F412_18.9 S4 MX4SA4**	422	**F412_18.9 P112 BE112M4**	**F412_18.9 P112 BX112M4**	423
77	483	3.2	18.8	9640	**F512_18.8 S4 ME4SA4**	**F512_18.8 S4 MX4SA4**	426	**F512_18.8 P112 BE112M4**	**F512_18.8 P112 BX112M4**	427
78	474	1.3	18.5	4980	**F312_18.5 S4 ME4SA4**	**F312_18.5 S4 MX4SA4**	418	**F312_18.5 P112 BE112M4**	**F312_18.5 P112 BX112M4**	419
84	439	2.4	17.1	7030	**F412_17.1 S4 ME4SA4**	**F412_17.1 S4 MX4SA4**	422	**F412_17.1 P112 BE112M4**	**F412_17.1 P112 BX112M4**	423
86	431	1.4	16.8	4930	**F312_16.8 S4 ME4SA4**	**F312_16.8 S4 MX4SA4**	418	**F312_16.8 P112 BE112M4**	**F312_16.8 P112 BX112M4**	419
98	375	2.7	14.6	6820	**F412_14.6 S4 ME4SA4**	**F412_14.6 S4 MX4SA4**	422	**F412_14.6 P112 BE112M4**	**F412_14.6 P112 BX112M4**	423
103	358	1.7	13.9	4820	**F312_13.9 S4 ME4SA4**	**F312_13.9 S4 MX4SA4**	418	**F312_13.9 P112 BE112M4**	**F312_13.9 P112 BX112M4**	419
113	326	1.8	12.7	4750	**F312_12.7 S4 ME4SA4**	**F312_12.7 S4 MX4SA4**	418	**F312_12.7 P112 BE112M4**	**F312_12.7 P112 BX112M4**	419
134	276	3.3	10.8	6380	**F412_10.8 S4 ME4SA4**	**F412_10.8 S4 MX4SA4**	422	**F412_10.8 P112 BE112M4**	**F412_10.8 P112 BX112M4**	423
134	276	2.2	10.7	4620	**F312_10.7 S4 ME4SA4**	**F312_10.7 S4 MX4SA4**	418	**F312_10.7 P112 BE112M4**	**F312_10.7 P112 BX112M4**	419
158	234	3.0	9.1	6160	**F412_9.1 S4 ME4SA4**	**F412_9.1 S4 MX4SA4**	422	**F412_9.1 P112 BE112M4**	**F412_9.1 P112 BX112M4**	423
160	231	1.7	9.0	4420	**F312_9.0 S4 ME4SA4**	**F312_9.0 S4 MX4SA4**	418	**F312_9.0 P112 BE112M4**	**F312_9.0 P112 BX112M4**	419
175	211	1.8	8.2	4350	**F312_8.2 S4 ME4SA4**	**F312_8.2 S4 MX4SA4**	418	**F312_8.2 P112 BE112M4**	**F312_8.2 P112 BX112M4**	419
207	178	2.2	6.9	4200	**F312_6.9 S4 ME4SA4**	**F312_6.9 S4 MX4SA4**	418	**F312_6.9 P112 BE112M4**	**F312_6.9 P112 BX112M4**	419
228	159	3.5	12.7	4120	**F312_12.7 S4 ME4SA2**		418	**F312_12.7 P112 BE112M2**		419
322	113	3.4	9.0	3760	**F312_9.0 S4 ME4SA2**		418	**F312_9.0 P112 BE112M2**		419

5.5 kW

n_2 min-1	M_2 Nm	S	i	R_{n2} N	IE2	IE3		IEC IE2	IEC IE3	
2.9	16057	0.9	495.6	55000	**F904_495.6 S4 ME4SB4**	**F904_495.6 S4 MX4SB4**	440	**F904_495.6 P132 BE132S4**	**F904_495.6 P132 BX132SB4**	441
3.2	14821	0.9	457.5	55000	**F904_457.5 S4 ME4SB4**	**F904_457.5 S4 MX4SB4**	440	**F904_457.5 P132 BE132S4**	**F904_457.5 P132 BX132SB4**	441
3.7	12701	1.1	392.0	55000	**F904_392.0 S4 ME4SB4**	**F904_392.0 S4 MX4SB4**	440	**F904_392.0 P132 BE132S4**	**F904_392.0 P132 BX132SB4**	441
4.0	11724	1.2	361.8	55000	**F904_361.8 S4 ME4SB4**	**F904_361.8 S4 MX4SB4**	440	**F904_361.8 P132 BE132S4**	**F904_361.8 P132 BX132SB4**	441
5.0	9432	1.5	291.1	55000	**F904_291.1 S4 ME4SB4**	**F904_291.1 S4 MX4SB4**	440	**F904_291.1 P132 BE132S4**	**F904_291.1 P132 BX132SB4**	441
5.3	8874	0.9	273.9	45000	**F804_273.9 S4 ME4SB4**	**F804_273.9 S4 MX4SB4**	437	**F804_273.9 P132 BE132S4**	**F804_273.9 P132 BX132SB4**	438
5.4	8707	1.6	268.7	55000	**F904_268.7 S4 ME4SB4**	**F904_268.7 S4 MX4SB4**	440	**F904_268.7 P132 BE132S4**	**F904_268.7 P132 BX132SB4**	441
6.3	7497	1.9	231.4	55000	**F904_231.4 S4 ME4SB4**	**F904_231.4 S4 MX4SB4**	440	**F904_231.4 P132 BE132S4**	**F904_231.4 P132 BX132SB4**	441
6.7	7079	1.1	218.5	45000	**F804_218.5 S4 ME4SB4**	**F804_218.5 S4 MX4SB4**	437	**F804_218.5 P132 BE132S4**	**F804_218.5 P132 BX132SB4**	438
6.8	6920	2.0	213.6	55000	**F904_213.6 S4 ME4SB4**	**F904_213.6 S4 MX4SB4**	440	**F904_213.6 P132 BE132S4**	**F904_213.6 P132 BX132SB4**	441
7.3	6696	1.2	200.0	45000	**F803_200.0 S4 ME4SB4**	**F803_200.0 S4 MX4SB4**	437	**F803_200.0 P132 BE132S4**	**F803_200.0 P132 BX132SB4**	438
7.5	6500	2.2	194.2	55000	**F903_194.2 S4 ME4SB4**	**F903_194.2 S4 MX4SB4**	440	**F903_194.2 P132 BE132S4**	**F903_194.2 P132 BX132SB4**	441
7.9	6181	1.3	184.6	45000	**F803_184.6 S4 ME4SB4**	**F803_184.6 S4 MX4SB4**	437	**F803_184.6 P132 BE132S4**	**F803_184.6 P132 BX132SB4**	438
8.1	6000	2.3	179.2	55000	**F903_179.2 S4 ME4SB4**	**F903_179.2 S4 MX4SB4**	440	**F903_179.2 P132 BE132S4**	**F903_179.2 P132 BX132SB4**	441
8.8	5580	0.9	166.7	35000	**F703_166.7 S4 ME4SB4**	**F703_166.7 S4 MX4SB4**	434	**F703_166.7 P132 BE132S4**	**F703_166.7 P132 BX132SB4**	435
9.0	5452	2.6	162.8	55000	**F903_162.8 S4 ME4SB4**	**F903_162.8 S4 MX4SB4**	440	**F903_162.8 P132 BE132S4**	**F903_162.8 P132 BX132SB4**	441
9.1	5364	1.5	160.2	45000	**F803_160.2 S4 ME4SB4**	**F803_160.2 S4 MX4SB4**	437	**F803_160.2 P132 BE132S4**	**F803_160.2 P132 BX132SB4**	438
9.5	5151	1.0	153.8	35000	**F703_153.8 S4 ME4SB4**	**F703_153.8 S4 MX4SB4**	434	**F703_153.8 P132 BE132S4**	**F703_153.8 P132 BX132SB4**	435
9.7	5032	2.8	150.3	55000	**F903_150.3 S4 ME4SB4**	**F903_150.3 S4 MX4SB4**	440	**F903_150.3 P132 BE132S4**	**F903_150.3 P132 BX132SB4**	441
9.9	4952	1.6	147.9	45000	**F803_147.9 S4 ME4SB4**	**F803_147.9 S4 MX4SB4**	437	**F803_147.9 P132 BE132S4**	**F803_147.9 P132 BX132SB4**	438
10.6	4598	3.0	137.3	55000	**F903_137.3 S4 ME4SB4**	**F903_137.3 S4 MX4SB4**	440	**F903_137.3 P132 BE132S4**	**F903_137.3 P132 BX132SB4**	441
11.0	4451	1.1	133.0	35000	**F703_133.0 S4 ME4SB4**	**F703_133.0 S4 MX4SB4**	434	**F703_133.0 P132 BE132S4**	**F703_133.0 P132 BX132SB4**	435

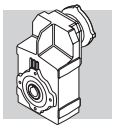

5.5 kW

n_2 min-1	M_2 Nm	S	i	R_{n2} N	IE2	IE3		IEC IE2	IE3	
11.0	4443	1.8	132.7	45000	**F803_132.7 S4 ME4SB4**	**F803_132.7 S4 MX4SB4**	437	**F803_132.7 P132 BE132S4**	**F803_132.7 P132 BX132SB4**	438
11.5	4244	3.3	126.8	55000	**F903_126.8 S4 ME4SB4**	**F903_126.8 S4 MX4SB4**	440	**F903_126.8 P132 BE132S4**	**F903_126.8 P132 BX132SB4**	441
11.9	4109	1.2	122.7	35000	**F703_122.7 S4 ME4SB4**	**F703_122.7 S4 MX4SB4**	434	**F703_122.7 P132 BE132S4**	**F703_122.7 P132 BX132SB4**	435
11.9	4101	2.0	122.5	45000	**F803_122.5 S4 ME4SB4**	**F803_122.5 S4 MX4SB4**	437	**F803_122.5 P132 BE132S4**	**F803_122.5 P132 BX132SB4**	438
12.8	3808	2.1	113.8	45000	**F803_113.8 S4 ME4SB4**	**F803_113.8 S4 MX4SB4**	437	**F803_113.8 P132 BE132S4**	**F803_113.8 P132 BX132SB4**	438
13.3	3670	1.4	109.6	35000	**F703_109.6 S4 ME4SB4**	**F703_109.6 S4 MX4SB4**	434	**F703_109.6 P132 BE132S4**	**F703_109.6 P132 BX132SB4**	435
13.9	3515	2.3	105.0	45000	**F803_105.0 S4 ME4SB4**	**F803_105.0 S4 MX4SB4**	437	**F803_105.0 P132 BE132S4**	**F803_105.0 P132 BX132SB4**	438
14.4	3388	1.5	101.2	35000	**F703_101.2 S4 ME4SB4**	**F703_101.2 S4 MX4SB4**	434	**F703_101.2 P132 BE132S4**	**F703_101.2 P132 BX132SB4**	435
15.8	3097	1.6	92.5	35000	**F703_92.5 S4 ME4SB4**	**F703_92.5 S4 MX4SB4**	434	**F703_92.5 P132 BE132S4**	**F703_92.5 P132 BX132SB4**	435
15.8	3090	2.6	92.3	45000	**F803_92.3 S4 ME4SB4**	**F803_92.3 S4 MX4SB4**	437	**F803_92.3 P132 BE132S4**	**F803_92.3 P132 BX132SB4**	438
17.1	2859	1.7	85.4	35000	**F703_85.4 S4 ME4SB4**	**F703_85.4 S4 MX4SB4**	434	**F703_85.4 P132 BE132S4**	**F703_85.4 P132 BX132SB4**	435
17.1	2853	2.8	85.2	45000	**F803_85.2 S4 ME4SB4**	**F803_85.2 S4 MX4SB4**	437	**F803_85.2 P132 BE132S4**	**F803_85.2 P132 BX132SB4**	438
17.4	2813	1.0	84.0	20000	**F603_84.0 S4 ME4SB4**	**F603_84.0 S4 MX4SB4**	430	**F603_84.0 P132 BE132S4**	**F603_84.0 P132 BX132SB4**	431
18.8	2597	1.1	77.6	20000	**F603_77.6 S4 ME4SB4**	**F603_77.6 S4 MX4SB4**	430	**F603_77.6 P132 BE132S4**	**F603_77.6 P132 BX132SB4**	431
19.1	2553	3.1	76.3	45000	**F803_76.3 S4 ME4SB4**	**F803_76.3 S4 MX4SB4**	437	**F803_76.3 P132 BE132S4**	**F803_76.3 P132 BX132SB4**	438
19.8	2463	2.0	73.6	35000	**F703_73.6 S4 ME4SB4**	**F703_73.6 S4 MX4SB4**	434	**F703_73.6 P132 BE132S4**	**F703_73.6 P132 BX132SB4**	435
20.7	2356	3.4	70.4	45000	**F803_70.4 S4 ME4SB4**	**F803_70.4 S4 MX4SB4**	437	**F803_70.4 P132 BE132S4**	**F803_70.4 P132 BX132SB4**	438
21.4	2286	1.3	68.3	20000	**F603_68.3 S4 ME4SB4**	**F603_68.3 S4 MX4SB4**	430	**F603_68.3 P132 BE132S4**	**F603_68.3 P132 BX132SB4**	431
21.5	2273	2.2	67.9	35000	**F703_67.9 S4 ME4SB4**	**F703_67.9 S4 MX4SB4**	434	**F703_67.9 P132 BE132S4**	**F703_67.9 P132 BX132SB4**	435
23.2	2110	1.4	63.0	20000	**F603_63.0 S4 ME4SB4**	**F603_63.0 S4 MX4SB4**	430	**F603_63.0 P132 BE132S4**	**F603_63.0 P132 BX132SB4**	431
23.4	2093	2.4	62.5	35000	**F703_62.5 S4 ME4SB4**	**F703_62.5 S4 MX4SB4**	434	**F703_62.5 P132 BE132S4**	**F703_62.5 P132 BX132SB4**	435
25.3	1932	2.6	57.7	35000	**F703_57.7 S4 ME4SB4**	**F703_57.7 S4 MX4SB4**	434	**F703_57.7 P132 BE132S4**	**F703_57.7 P132 BX132SB4**	435
28.2	1735	1.7	51.8	20000	**F603_51.8 S4 ME4SB4**	**F603_51.8 S4 MX4SB4**	430	**F603_51.8 P132 BE132S4**	**F603_51.8 P132 BX132SB4**	431
30	1639	3.1	49.0	35000	**F703_49.0 S4 ME4SB4**	**F703_49.0 S4 MX4SB4**	434	**F703_49.0 P132 BE132S4**	**F703_49.0 P132 BX132SB4**	435
30	1637	1.1	48.9	10300	**F513_48.9 S4 ME4SB4**	**F513_48.9 S4 MX4SB4**	426	**F513_48.9 P132 BE132S4**	**F513_48.9 P132 BX132SB4**	427
31	1602	1.8	47.8	20000	**F603_47.8 S4 ME4SB4**	**F603_47.8 S4 MX4SB4**	430	**F603_47.8 P132 BE132S4**	**F603_47.8 P132 BX132SB4**	431
32	1513	3.3	45.2	34300	**F703_45.2 S4 ME4SB4**	**F703_45.2 S4 MX4SB4**	434	**F703_45.2 P132 BE132S4**	**F703_45.2 P132 BX132SB4**	435
35	1409	2.1	42.1	20000	**F603_42.1 S4 ME4SB4**	**F603_42.1 S4 MX4SB4**	430	**F603_42.1 P132 BE132S4**	**F603_42.1 P132 BX132SB4**	431
38	1301	2.2	38.8	20000	**F603_38.8 S4 ME4SB4**	**F603_38.8 S4 MX4SB4**	430	**F603_38.8 P132 BE132S4**	**F603_38.8 P132 BX132SB4**	431
39	1270	1.3	37.1	10300	**F512_37.1 S4 ME4SB4**	**F512_37.1 S4 MX4SB4**	426	**F512_37.1 P132 BE132S4**	**F512_37.1 P132 BX132SB4**	427
46	1074	2.7	32.1	20000	**F603_32.1 S4 ME4SB4**	**F603_32.1 S4 MX4SB4**	430	**F603_32.1 P132 BE132S4**	**F603_32.1 P132 BX132SB4**	431
48	1030	1.1	30.1	6580	**F412_30.1 S4 ME4SB4**	**F412_30.1 S4 MX4SB4**	422	**F412_30.1 P132 BE132S4**	**F412_30.1 P132 BX132SB4**	423
49	1027	1.7	30.0	9950	**F512_30.0 S4 ME4SB4**	**F512_30.0 S4 MX4SB4**	426	**F512_30.0 P132 BE132S4**	**F512_30.0 P132 BX132SB4**	427
49	992	2.9	29.6	20000	**F603_29.6 S4 ME4SB4**	**F603_29.6 S4 MX4SB4**	430	**F603_29.6 P132 BE132S4**	**F603_29.6 P132 BX132SB4**	431
57	851	2.2	25.4	20000	**F603_25.4 S4 ME4SB4**	**F603_25.4 S4 MX4SB4**	430	**F603_25.4 P132 BE132S4**	**F603_25.4 P132 BX132SB4**	431
61	825	1.3	24.1	6580	**F412_24.1 S4 ME4SB4**	**F412_24.1 S4 MX4SB4**	422	**F412_24.1 P132 BE132S4**	**F412_24.1 P132 BX132SB4**	423
61	814	2.0	23.8	9560	**F512_23.8 S4 ME4SB4**	**F512_23.8 S4 MX4SB4**	426	**F512_23.8 P132 BE132S4**	**F512_23.8 P132 BX132SB4**	427
62	786	2.4	23.5	20000	**F603_23.5 S4 ME4SB4**	**F603_23.5 S4 MX4SB4**	430	**F603_23.5 P132 BE132S4**	**F603_23.5 P132 BX132SB4**	431
71	692	2.7	20.7	20000	**F603_20.7 S4 ME4SB4**	**F603_20.7 S4 MX4SB4**	430	**F603_20.7 P132 BE132S4**	**F603_20.7 P132 BX132SB4**	431
77	638	3.0	19.1	20000	**F603_19.1 S4 ME4SB4**	**F603_19.1 S4 MX4SB4**	430	**F603_19.1 P132 BE132S4**	**F603_19.1 P132 BX132SB4**	431
77	646	1.7	18.9	6480	**F412_18.9 S4 ME4SB4**	**F412_18.9 S4 MX4SB4**	422	**F412_18.9 P132 BE132S4**	**F412_18.9 P132 BX132SB4**	423
78	644	2.4	18.8	9110	**F512_18.8 S4 ME4SB4**	**F512_18.8 S4 MX4SB4**	426	**F512_18.8 P132 BE132S4**	**F512_18.8 P132 BX132SB4**	427
79	632	0.9	18.5	4480	**F312_18.5 S4 ME4SB4**	**F312_18.5 S4 MX4SB4**	418	**F312_18.5 P132 BE132S4**	**F312_18.5 P132 BX132SB4**	419
85	585	1.8	17.1	6410	**F412_17.1 S4 ME4SB4**	**F412_17.1 S4 MX4SB4**	422	**F412_17.1 P132 BE132S4**	**F412_17.1 P132 BX132SB4**	423
87	575	1.0	16.8	4300	**F312_16.8 S4 ME4SB4**	**F312_16.8 S4 MX4SB4**	418	**F312_16.8 P132 BE132S4**	**F312_16.8 P132 BX132SB4**	419
100	500	2.0	14.6	6280	**F412_14.6 S4 ME4SB4**	**F412_14.6 S4 MX4SB4**	422	**F412_14.6 P132 BE132S4**	**F412_14.6 P132 BX132SB4**	423
104	478	3.0	14.0	8520	**F512_14.0 S4 ME4SB4**	**F512_14.0 S4 MX4SB4**	426	**F512_14.0 P132 BE132S4**	**F512_14.0 P132 BX132SB4**	427
105	477	1.3	13.9	4180	**F312_13.9 S4 ME4SB4**	**F312_13.9 S4 MX4SB4**	418	**F312_13.9 P132 BE132S4**	**F312_13.9 P132 BX132SB4**	419
115	435	1.4	12.7	3980	**F312_12.7 S4 ME4SB4**	**F312_12.7 S4 MX4SB4**	418	**F312_12.7 P132 BE132S4**	**F312_12.7 P132 BX132SB4**	419
131	380	3.5	11.1	8050	**F512_11.1 S4 ME4SB4**	**F512_11.1 S4 MX4SB4**	426	**F512_11.1 P132 BE132S4**	**F512_11.1 P132 BX132SB4**	427
136	368	2.4	10.8	5970	**F412_10.8 S4 ME4SB4**	**F412_10.8 S4 MX4SB4**	422	**F412_10.8 P132 BE132S4**	**F412_10.8 P132 BX132SB4**	423
136	368	1.6	10.7	3880	**F312_10.7 S4 ME4SB4**	**F312_10.7 S4 MX4SB4**	418	**F312_10.7 P132 BE132S4**	**F312_10.7 P132 BX132SB4**	419
160	312	2.2	9.1	5810	**F412_9.1 S4 ME4SB4**	**F412_9.1 S4 MX4SB4**	422	**F412_9.1 P132 BE132S4**	**F412_9.1 P132 BX132SB4**	423
161	310	3.6	9.1	7590	**F512_9.1 S4 ME4SB4**	**F512_9.1 S4 MX4SB4**	426	**F512_9.1 P132 BE132S4**	**F512_9.1 P132 BX132SB4**	427
162	308	1.3	9.0	3850	**F312_9.0 S4 ME4SB4**	**F312_9.0 S4 MX4SB4**	418	**F312_9.0 P132 BE132S4**	**F312_9.0 P132 BX132SB4**	419
177	281	1.4	8.2	3750	**F312_8.2 S4 ME4SB4**	**F312_8.2 S4 MX4SB4**	418	**F312_8.2 P132 BE132S4**	**F312_8.2 P132 BX132SB4**	419
200	250	3.3	14.6	5510	**F412_14.6 S4 ME4SB2**		422	**F412_14.6 P132 BE132SA2**		423
210	238	1.6	6.9	3610	**F312_6.9 S4 ME4SB4**	**F312_6.9 S4 MX4SB4**	418	**F312_6.9 P132 BE132S4**	**F312_6.9 P132 BX132SB4**	419
217	230	2.8	6.7	5430	**F412_6.7 S4 ME4SB4**	**F412_6.7 S4 MX4SB4**	422	**F412_6.7 P132 BE132S4**	**F412_6.7 P132 BX132SB4**	423
272	184	4.0	10.8	5120	**F412_10.8 S4 ME4SB2**		422	**F412_10.8 P132 BE132SA2**		423
320	156	3.9	9.1	4930	**F412_9.1 S4 ME4SB2**		422	**F412_9.1 P132 BE132SA2**		423

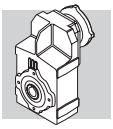

7.5 kW

n_2 min-1	M_2 Nm	S	i	R_{n2} N	IE2	IE3		IEC IE2	IEC IE3	
4.0	15957	0.9	361.8	55000	**F904_361.8 S4 ME4LA4**	**F904_361.8 S4 MX4LA4**	440	**F904_361.8 P132 BE132MA4**	**F904_361.8 P132 BX132MA4**	441
5.0	12838	1.1	291.1	55000	**F904_291.1 S4 ME4LA4**	**F904_291.1 S4 MX4LA4**	440	**F904_291.1 P132 BE132MA4**	**F904_291.1 P132 BX132MA4**	441
5.4	11851	1.2	268.7	55000	**F904_268.7 S4 ME4LA4**	**F904_268.7 S4 MX4LA4**	440	**F904_268.7 P132 BE132MA4**	**F904_268.7 P132 BX132MA4**	441
6.3	10204	1.4	231.4	55000	**F904_231.4 S4 ME4LA4**	**F904_231.4 S4 MX4LA4**	440	**F904_231.4 P132 BE132MA4**	**F904_231.4 P132 BX132MA4**	441
6.8	9419	1.5	213.6	55000	**F904_213.6 S4 ME4LA4**	**F904_213.6 S4 MX4LA4**	440	**F904_213.6 P132 BE132MA4**	**F904_213.6 P132 BX132MA4**	441
7.3	9114	0.9	200.0	45000	**F803_200.0 S4 ME4LA4**	**F803_200.0 S4 MX4LA4**	437	**F803_200.0 P132 BE132MA4**	**F803_200.0 P132 BX132MA4**	438
7.5	8848	1.6	194.2	55000	**F903_194.2 S4 ME4LA4**	**F903_194.2 S4 MX4LA4**	440	**F903_194.2 P132 BE132MA4**	**F903_194.2 P132 BX132MA4**	441
7.9	8413	1.0	184.6	45000	**F803_184.6 S4 ME4LA4**	**F803_184.6 S4 MX4LA4**	437	**F803_184.6 P132 BE132MA4**	**F803_184.6 P132 BX132MA4**	438
8.1	8167	1.7	179.2	55000	**F903_179.2 S4 ME4LA4**	**F903_179.2 S4 MX4LA4**	440	**F903_179.2 P132 BE132MA4**	**F903_179.2 P132 BX132MA4**	441
8.9	7420	1.9	162.8	55000	**F903_162.8 S4 ME4LA4**	**F903_162.8 S4 MX4LA4**	440	**F903_162.8 P132 BE132MA4**	**F903_162.8 P132 BX132MA4**	441
9.1	7302	1.1	160.2	45000	**F803_160.2 S4 ME4LA4**	**F803_160.2 S4 MX4LA4**	437	**F803_160.2 P132 BE132MA4**	**F803_160.2 P132 BX132MA4**	438
9.7	6849	2.0	150.3	55000	**F903_150.3 S4 ME4LA4**	**F903_150.3 S4 MX4LA4**	440	**F903_150.3 P132 BE132MA4**	**F903_150.3 P132 BX132MA4**	441
9.8	6740	1.2	147.9	45000	**F803_147.9 S4 ME4LA4**	**F803_147.9 S4 MX4LA4**	437	**F803_147.9 P132 BE132MA4**	**F803_147.9 P132 BX132MA4**	438
10.6	6259	2.2	137.3	55000	**F903_137.3 S4 ME4LA4**	**F903_137.3 S4 MX4LA4**	440	**F903_137.3 P132 BE132MA4**	**F903_137.3 P132 BX132MA4**	441
11.0	6047	1.3	132.7	45000	**F803_132.7 S4 ME4LA4**	**F803_132.7 S4 MX4LA4**	437	**F803_132.7 P132 BE132MA4**	**F803_132.7 P132 BX132MA4**	438
11.5	5777	2.4	126.8	55000	**F903_126.8 S4 ME4LA4**	**F903_126.8 S4 MX4LA4**	440	**F903_126.8 P132 BE132MA4**	**F903_126.8 P132 BX132MA4**	441
11.9	5593	0.9	122.7	35000	**F703_122.7 S4 ME4LA4**	**F703_122.7 S4 MX4LA4**	434	**F703_122.7 P132 BE132MA4**	**F703_122.7 P132 BX132MA4**	435
11.9	5582	1.4	122.5	45000	**F803_122.5 S4 ME4LA4**	**F803_122.5 S4 MX4LA4**	437	**F803_122.5 P132 BE132MA4**	**F803_122.5 P132 BX132MA4**	438
12.8	5184	1.5	113.8	45000	**F803_113.8 S4 ME4LA4**	**F803_113.8 S4 MX4LA4**	437	**F803_113.8 P132 BE132MA4**	**F803_113.8 P132 BX132MA4**	438
13.0	5101	2.7	111.9	55000	**F903_111.9 S4 ME4LA4**	**F903_111.9 S4 MX4LA4**	440	**F903_111.9 P132 BE132MA4**	**F903_111.9 P132 BX132MA4**	441
13.3	4995	1.0	109.6	35000	**F703_109.6 S4 ME4LA4**	**F703_109.6 S4 MX4LA4**	434	**F703_109.6 P132 BE132MA4**	**F703_109.6 P132 BX132MA4**	435
13.9	4785	1.7	105.0	45000	**F803_105.0 S4 ME4LA4**	**F803_105.0 S4 MX4LA4**	437	**F803_105.0 P132 BE132MA4**	**F803_105.0 P132 BX132MA4**	438
14.1	4709	3.0	103.3	55000	**F903_103.3 S4 ME4LA4**	**F903_103.3 S4 MX4LA4**	440	**F903_103.3 P132 BE132MA4**	**F903_103.3 P132 BX132MA4**	441
14.4	4611	1.1	101.2	35000	**F703_101.2 S4 ME4LA4**	**F703_101.2 S4 MX4LA4**	434	**F703_101.2 P132 BE132MA4**	**F703_101.2 P132 BX132MA4**	435
15.2	4364	3.2	95.8	55000	**F903_95.8 S4 ME4LA4**	**F903_95.8 S4 MX4LA4**	440	**F903_95.8 P132 BE132MA4**	**F903_95.8 P132 BX132MA4**	441
15.7	4215	1.2	92.5	35000	**F703_92.5 S4 ME4LA4**	**F703_92.5 S4 MX4LA4**	434	**F703_92.5 P132 BE132MA4**	**F703_92.5 P132 BX132MA4**	435
15.8	4206	1.9	92.3	45000	**F803_92.3 S4 ME4LA4**	**F803_92.3 S4 MX4LA4**	437	**F803_92.3 P132 BE132MA4**	**F803_92.3 P132 BX132MA4**	438
16.5	4028	3.5	88.4	55000	**F903_88.4 S4 ME4LA4**	**F903_88.4 S4 MX4LA4**	440	**F903_88.4 P132 BE132MA4**	**F903_88.4 P132 BX132MA4**	441
17.0	3891	1.3	85.4	35000	**F703_85.4 S4 ME4LA4**	**F703_85.4 S4 MX4LA4**	434	**F703_85.4 P132 BE132MA4**	**F703_85.4 P132 BX132MA4**	435
17.1	3883	2.1	85.2	45000	**F803_85.2 S4 ME4LA4**	**F803_85.2 S4 MX4LA4**	437	**F803_85.2 P132 BE132MA4**	**F803_85.2 P132 BX132MA4**	438
19.1	3475	2.3	76.3	45000	**F803_76.3 S4 ME4LA4**	**F803_76.3 S4 MX4LA4**	437	**F803_76.3 P132 BE132MA4**	**F803_76.3 P132 BX132MA4**	438
19.8	3352	1.5	73.6	35000	**F703_73.6 S4 ME4LA4**	**F703_73.6 S4 MX4LA4**	434	**F703_73.6 P132 BE132MA4**	**F703_73.6 P132 BX132MA4**	435
20.7	3207	2.5	70.4	44700	**F803_70.4 S4 ME4LA4**	**F803_70.4 S4 MX4LA4**	437	**F803_70.4 P132 BE132MA4**	**F803_70.4 P132 BX132MA4**	438
21.3	3112	0.9	68.3	20000	**F603_68.3 S4 ME4LA4**	**F603_68.3 S4 MX4LA4**	430	**F603_68.3 P132 BE132MA4**	**F603_68.3 P132 BX132MA4**	431
21.4	3094	1.6	67.9	35000	**F703_67.9 S4 ME4LA4**	**F703_67.9 S4 MX4LA4**	434	**F703_67.9 P132 BE132MA4**	**F703_67.9 P132 BX132MA4**	435
23.1	2872	1.0	63.0	20000	**F603_63.0 S4 ME4LA4**	**F603_63.0 S4 MX4LA4**	430	**F603_63.0 P132 BE132MA4**	**F603_63.0 P132 BX132MA4**	431
23.3	2848	1.8	62.5	35000	**F703_62.5 S4 ME4LA4**	**F703_62.5 S4 MX4LA4**	434	**F703_62.5 P132 BE132MA4**	**F703_62.5 P132 BX132MA4**	435
23.7	2801	2.9	61.5	43500	**F803_61.5 S4 ME4LA4**	**F803_61.5 S4 MX4LA4**	437	**F803_61.5 P132 BE132MA4**	**F803_61.5 P132 BX132MA4**	438
25.2	2629	1.9	57.7	34900	**F703_57.7 S4 ME4LA4**	**F703_57.7 S4 MX4LA4**	434	**F703_57.7 P132 BE132MA4**	**F703_57.7 P132 BX132MA4**	435
25.6	2585	3.1	56.7	42600	**F803_56.7 S4 ME4LA4**	**F803_56.7 S4 MX4LA4**	437	**F803_56.7 P132 BE132MA4**	**F803_56.7 P132 BX132MA4**	438
28.1	2362	1.2	51.8	20000	**F603_51.8 S4 ME4LA4**	**F603_51.8 S4 MX4LA4**	430	**F603_51.8 P132 BE132MA4**	**F603_51.8 P132 BX132MA4**	431
29.7	2231	2.2	49.0	33800	**F703_49.0 S4 ME4LA4**	**F703_49.0 S4 MX4LA4**	434	**F703_49.0 P132 BE132MA4**	**F703_49.0 P132 BX132MA4**	435
30	2180	1.3	47.8	20000	**F603_47.8 S4 ME4LA4**	**F603_47.8 S4 MX4LA4**	430	**F603_47.8 P132 BE132MA4**	**F603_47.8 P132 BX132MA4**	431
32	2059	2.4	45.2	33200	**F703_45.2 S4 ME4LA4**	**F703_45.2 S4 MX4LA4**	434	**F703_45.2 P132 BE132MA4**	**F703_45.2 P132 BX132MA4**	435
35	1918	1.5	42.1	20000	**F603_42.1 S4 ME4LA4**	**F603_42.1 S4 MX4LA4**	430	**F603_42.1 P132 BE132MA4**	**F603_42.1 P132 BX132MA4**	431
37	1770	1.6	38.8	20000	**F603_38.8 S4 ME4LA4**	**F603_38.8 S4 MX4LA4**	430	**F603_38.8 P132 BE132MA4**	**F603_38.8 P132 BX132MA4**	431
39	1729	1.0	37.1	9090	**F512_37.1 S4 ME4LA4**	**F512_37.1 S4 MX4LA4**	426	**F512_37.1 P132 BE132MA4**	**F512_37.1 P132 BX132MA4**	427
45	1462	2.0	32.1	20000	**F603_32.1 S4 ME4LA4**	**F603_32.1 S4 MX4LA4**	430	**F603_32.1 P132 BE132MA4**	**F603_32.1 P132 BX132MA4**	431
48	1398	1.2	30.0	9010	**F512_30.0 S4 ME4LA4**	**F512_30.0 S4 MX4LA4**	426	**F512_30.0 P132 BE132MA4**	**F512_30.0 P132 BX132MA4**	427
49	1350	2.1	29.6	20000	**F603_29.6 S4 ME4LA4**	**F603_29.6 S4 MX4LA4**	430	**F603_29.6 P132 BE132MA4**	**F603_29.6 P132 BX132MA4**	431
57	1158	1.6	25.4	20000	**F603_25.4 S4 ME4LA4**	**F603_25.4 S4 MX4LA4**	430	**F603_25.4 P132 BE132MA4**	**F603_25.4 P132 BX132MA4**	431
60	1123	1.0	24.1	5500	**F412_24.1 S4 ME4LA4**	**F412_24.1 S4 MX4LA4**	422	**F412_24.1 P132 BE132MA4**	**F412_24.1 P132 BX132MA4**	423
61	1108	1.5	23.8	8810	**F512_23.8 S4 ME4LA4**	**F512_23.8 S4 MX4LA4**	426	**F512_23.8 P132 BE132MA4**	**F512_23.8 P132 BX132MA4**	427
62	1069	1.8	23.5	20000	**F603_23.5 S4 ME4LA4**	**F603_23.5 S4 MX4LA4**	430	**F603_23.5 P132 BE132MA4**	**F603_23.5 P132 BX132MA4**	431
70	941	2.0	20.7	20000	**F603_20.7 S4 ME4LA4**	**F603_20.7 S4 MX4LA4**	430	**F603_20.7 P132 BE132MA4**	**F603_20.7 P132 BX132MA4**	431
76	869	2.2	19.1	20000	**F603_19.1 S4 ME4LA4**	**F603_19.1 S4 MX4LA4**	430	**F603_19.1 P132 BE132MA4**	**F603_19.1 P132 BX132MA4**	431
77	879	1.2	18.9	5630	**F412_18.9 S4 ME4LA4**	**F412_18.9 S4 MX4LA4**	422	**F412_18.9 P132 BE132MA4**	**F412_18.9 P132 BX132MA4**	423
77	876	1.8	18.8	8520	**F512_18.8 S4 ME4LA4**	**F512_18.8 S4 MX4LA4**	426	**F512_18.8 P132 BE132MA4**	**F512_18.8 P132 BX132MA4**	427
85	797	1.3	17.1	5650	**F412_17.1 S4 ME4LA4**	**F412_17.1 S4 MX4LA4**	422	**F412_17.1 P132 BE132MA4**	**F412_17.1 P132 BX132MA4**	423
93	715	2.7	15.7	20000	**F603_15.7 S4 ME4LA4**	**F603_15.7 S4 MX4LA4**	430	**F603_15.7 P132 BE132MA4**	**F603_15.7 P132 BX132MA4**	431
99	681	1.5	14.6	5630	**F412_14.6 S4 ME4LA4**	**F412_14.6 S4 MX4LA4**	422	**F412_14.6 P132 BE132MA4**	**F412_14.6 P132 BX132MA4**	423
101	660	2.9	14.5	20000	**F603_14.5 S4 ME4LA4**	**F603_14.5 S4 MX4LA4**	430	**F603_14.5 P132 BE132MA4**	**F603_14.5 P132 BX132MA4**	431
104	651	2.2	14.0	8080	**F512_14.0 S4 ME4LA4**	**F512_14.0 S4 MX4LA4**	426	**F512_14.0 P132 BE132MA4**	**F512_14.0 P132 BX132MA4**	427
104	649	0.9	13.9	3980	**F312_13.9 S4 ME4LA4**	**F312_13.9 S4 MX4LA4**	418	**F312_13.9 P132 BE132MA4**	**F312_13.9 P132 BX132MA4**	419
114	580	3.3	12.7	19900	**F603_12.7 S4 ME4LA4**	**F603_12.7 S4 MX4LA4**	430	**F603_12.7 P132 BE132MA4**	**F603_12.7 P132 BX132MA4**	431

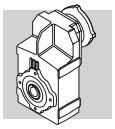

7.5 kW

n_2 min-1	M_2 Nm	S	i	R_{n2} N	IE2	IE3		IEC IE2	IEC IE3	
114	592	1.0	12.7	3880	**F312_12.7 S4 ME4LA4**	**F312_12.7 S4 MX4LA4**	418	**F312_12.7 P132 BE132MA4**	**F312_12.7 P132 BX132MA4**	419
124	536	3.5	11.8	19500	**F603_11.8 S4 ME4LA4**	**F603_11.8 S4 MX4LA4**	430	**F603_11.8 P132 BE132MA4**	**F603_11.8 P132 BX132MA4**	431
131	517	2.6	11.1	7700	**F512_11.1 S4 ME4LA4**	**F512_11.1 S4 MX4LA4**	426	**F512_11.1 P132 BE132MA4**	**F512_11.1 P132 BX132MA4**	427
135	501	1.8	10.8	5490	**F412_10.8 S4 ME4LA4**	**F412_10.8 S4 MX4LA4**	422	**F412_10.8 P132 BE132MA4**	**F412_10.8 P132 BX132MA4**	423
135	500	1.2	10.7	3730	**F312_10.7 S4 ME4LA4**	**F312_10.7 S4 MX4LA4**	418	**F312_10.7 P132 BE132MA4**	**F312_10.7 P132 BX132MA4**	419
159	425	1.6	9.1	5410	**F412_9.1 S4 ME4LA4**	**F412_9.1 S4 MX4LA4**	422	**F412_9.1 P132 BE132MA4**	**F412_9.1 P132 BX132MA4**	423
161	421	2.6	9.1	7290	**F512_9.1 S4 ME4LA4**	**F512_9.1 S4 MX4LA4**	426	**F512_9.1 P132 BE132MA4**	**F512_9.1 P132 BX132MA4**	427
161	420	0.9	9.0	3770	**F312_9.0 S4 ME4LA4**	**F312_9.0 S4 MX4LA4**	418	**F312_9.0 P132 BE132MA4**	**F312_9.0 P132 BX132MA4**	419
177	383	1.0	8.2	3680	**F312_8.2 S4 ME4LA4**	**F312_8.2 S4 MX4LA4**	418	**F312_8.2 P132 BE132MA4**	**F312_8.2 P132 BX132MA4**	419
202	335	2.9	7.2	6900	**F512_7.2 S4 ME4LA4**	**F512_7.2 S4 MX4LA4**	426	**F512_7.2 P132 BE132MA4**	**F512_7.2 P132 BX132MA4**	427
209	323	1.2	6.9	3520	**F312_6.9 S4 ME4LA4**	**F312_6.9 S4 MX4LA4**	418	**F312_6.9 P132 BE132MA4**	**F312_6.9 P132 BX132MA4**	419
216	313	2.0	6.7	5140	**F412_6.7 S4 ME4LA4**	**F412_6.7 S4 MX4LA4**	422	**F412_6.7 P132 BE132MA4**	**F412_6.7 P132 BX132MA4**	423
272	251	2.9	10.8	4880	**F412_10.8 S4 ME4LA2**		422	**F412_10.8 P132 BE132SB2**		423
320	213	2.9	9.1	4730	**F412_9.1 S4 ME4LA2**		422	**F412_9.1 P132 BE132SB2**		423
435	156	3.3	6.7	4390	**F412_6.7 S4 ME4LA2**		422	**F412_6.7 P132 BE132SB2**		423

9.2 kW

n_2 min-1	M_2 Nm	S	i	R_{n2} N	IE2	IE3		IEC IE2	IEC IE3	
5.0	15983	0.9	291.1	55000	**F904_291.1 S4 ME4LB4**		440	**F904_291.1 P132 BE132MB4**	**F904_291.1 P160 BX160MA4**	441
5.4	14753	0.9	268.7	55000	**F904_268.7 S4 ME4LB4**		440	**F904_268.7 P132 BE132MB4**	**F904_268.7 P160 BX160MA4**	441
6.3	12703	1.1	231.4	55000	**F904_231.4 S4 ME4LB4**		440	**F904_231.4 P132 BE132MB4**	**F904_231.4 P160 BX160MA4**	441
6.8	11726	1.2	213.6	55000	**F904_213.6 S4 ME4LB4**		440	**F904_213.6 P132 BE132MB4**	**F904_213.6 P160 BX160MA4**	441
7.5	11014	1.3	194.2	55000	**F903_194.2 S4 ME4LB4**	**F903_194.2 S5 MX5SA4**	440	**F903_194.2 P132 BE132MB4**	**F903_194.2 P160 BX160MA4**	441
8.1	10167	1.4	179.2	55000	**F903_179.2 S4 ME4LB4**	**F903_179.2 S5 MX5SA4**	440	**F903_179.2 P132 BE132MB4**	**F903_179.2 P160 BX160MA4**	441
8.9	9237	1.5	162.8	55000	**F903_162.8 S4 ME4LB4**	**F903_162.8 S5 MX5SA4**	440	**F903_162.8 P132 BE132MB4**	**F903_162.8 P160 BX160MA4**	441
9.0	9090	0.9	160.2	45000	**F803_160.2 S4 ME4LB4**	**F803_160.2 S5 MX5SA4**	437	**F803_160.2 P132 BE132MB4**	**F803_160.2 P160 BX160MA4**	438
9.6	8527	1.6	150.3	55000	**F903_150.3 S4 ME4LB4**	**F903_150.3 S5 MX5SA4**	440	**F903_150.3 P132 BE132MB4**	**F903_150.3 P160 BX160MA4**	441
9.8	8390	1.0	147.9	45000	**F803_147.9 S4 ME4LB4**	**F803_147.9 S5 MX5SA4**	437	**F803_147.9 P132 BE132MB4**	**F803_147.9 P160 BX160MA4**	438
10.6	7791	1.8	137.3	55000	**F903_137.3 S4 ME4LB4**	**F903_137.3 S5 MX5SA4**	440	**F903_137.3 P132 BE132MB4**	**F903_137.3 P160 BX160MA4**	441
10.9	7528	1.1	132.7	45000	**F803_132.7 S4 ME4LB4**	**F803_132.7 S5 MX5SA4**	437	**F803_132.7 P132 BE132MB4**	**F803_132.7 P160 BX160MA4**	438
11.4	7192	1.9	126.8	55000	**F903_126.8 S4 ME4LB4**	**F903_126.8 S5 MX5SA4**	440	**F903_126.8 P132 BE132MB4**	**F903_126.8 P160 BX160MA4**	441
11.8	6949	1.2	122.5	45000	**F803_122.5 S4 ME4LB4**	**F803_122.5 S5 MX5SA4**	437	**F803_122.5 P132 BE132MB4**	**F803_122.5 P160 BX160MA4**	438
12.7	6453	1.2	113.8	45000	**F803_113.8 S4 ME4LB4**	**F803_113.8 S5 MX5SA4**	437	**F803_113.8 P132 BE132MB4**	**F803_113.8 P160 BX160MA4**	438
13.0	6351	2.2	111.9	55000	**F903_111.9 S4 ME4LB4**	**F903_111.9 S5 MX5SA4**	440	**F903_111.9 P132 BE132MB4**	**F903_111.9 P160 BX160MA4**	441
13.8	5957	1.3	105.0	45000	**F803_105.0 S4 ME4LB4**	**F803_105.0 S5 MX5SA4**	437	**F803_105.0 P132 BE132MB4**	**F803_105.0 P160 BX160MA4**	438
14.0	5862	2.4	103.3	55000	**F903_103.3 S4 ME4LB4**	**F903_103.3 S5 MX5SA4**	440	**F903_103.3 P132 BE132MB4**	**F903_103.3 P160 BX160MA4**	441
15.1	5432	2.6	95.8	55000	**F903_95.8 S4 ME4LB4**	**F903_95.8 S5 MX5SA4**	440	**F903_95.8 P132 BE132MB4**	**F903_95.8 P160 BX160MA4**	441
15.7	5248	1.0	92.5	35000	**F703_92.5 S4 ME4LB4**	**F703_92.5 S5 MX5SA4**	434	**F703_92.5 P132 BE132MB4**	**F703_92.5 P160 BX160MA4**	435
15.7	5237	1.5	92.3	45000	**F803_92.3 S4 ME4LB4**	**F803_92.3 S5 MX5SA4**	437	**F803_92.3 P132 BE132MB4**	**F803_92.3 P160 BX160MA4**	438
16.4	5015	2.8	88.4	55000	**F903_88.4 S4 ME4LB4**	**F903_88.4 S5 MX5SA4**	440	**F903_88.4 P132 BE132MB4**	**F903_88.4 P160 BX160MA4**	441
17.0	4844	1.0	85.4	35000	**F703_85.4 S4 ME4LB4**	**F703_85.4 S5 MX5SA4**	434	**F703_85.4 P132 BE132MB4**	**F703_85.4 P160 BX160MA4**	435
17.0	4834	1.7	85.2	45000	**F803_85.2 S4 ME4LB4**	**F803_85.2 S5 MX5SA4**	437	**F803_85.2 P132 BE132MB4**	**F803_85.2 P160 BX160MA4**	438
18.9	4348	3.2	76.7	55000	**F903_76.7 S4 ME4LB4**	**F903_76.7 S5 MX5SA4**	440	**F903_76.7 P132 BE132MB4**	**F903_76.7 P160 BX160MA4**	441
19.0	4326	1.8	76.3	44100	**F803_76.3 S4 ME4LB4**	**F803_76.3 S5 MX5SA4**	437	**F803_76.3 P132 BE132MB4**	**F803_76.3 P160 BX160MA4**	438
19.7	4173	1.2	73.6	35000	**F703_73.6 S4 ME4LB4**	**F703_73.6 S5 MX5SA4**	434	**F703_73.6 P132 BE132MB4**	**F703_73.6 P160 BX160MA4**	435
20.5	4014	3.5	70.8	55000	**F903_70.8 S4 ME4LB4**	**F903_70.8 S5 MX5SA4**	440	**F903_70.8 P132 BE132MB4**	**F903_70.8 P160 BX160MA4**	441
20.6	3993	2.0	70.4	43700	**F803_70.4 S4 ME4LB4**	**F803_70.4 S5 MX5SA4**	437	**F803_70.4 P132 BE132MB4**	**F803_70.4 P160 BX160MA4**	438
21.4	3852	1.3	67.9	34600	**F703_67.9 S4 ME4LB4**	**F703_67.9 S5 MX5SA4**	434	**F703_67.9 P132 BE132MB4**	**F703_67.9 P160 BX160MA4**	435
23.2	3546	1.4	62.5	34200	**F703_62.5 S4 ME4LB4**	**F703_62.5 S5 MX5SA4**	434	**F703_62.5 P132 BE132MB4**	**F703_62.5 P160 BX160MA4**	435
23.6	3487	2.3	61.5	42200	**F803_61.5 S4 ME4LB4**	**F803_61.5 S5 MX5SA4**	437	**F803_61.5 P132 BE132MB4**	**F803_61.5 P160 BX160MA4**	438
25.1	3273	1.5	57.7	33700	**F703_57.7 S4 ME4LB4**	**F703_57.7 S5 MX5SA4**	434	**F703_57.7 P132 BE132MB4**	**F703_57.7 P160 BX160MA4**	435
25.6	3218	2.5	56.7	41400	**F803_56.7 S4 ME4LB4**	**F803_56.7 S5 MX5SA4**	437	**F803_56.7 P132 BE132MB4**	**F803_56.7 P160 BX160MA4**	438
28.0	2940	1.0	51.8	20000	**F603_51.8 S4 ME4LB4**	**F603_51.8 S5 MX5SA4**	430	**F603_51.8 P132 BE132MB4**	**F603_51.8 P160 BX160MA4**	431
29.6	2777	1.8	49.0	32800	**F703_49.0 S4 ME4LB4**	**F703_49.0 S5 MX5SA4**	434	**F703_49.0 P132 BE132MB4**	**F703_49.0 P160 BX160MA4**	435
30	2714	1.1	47.8	20000	**F603_47.8 S4 ME4LB4**	**F603_47.8 S5 MX5SA4**	430	**F603_47.8 P132 BE132MB4**	**F603_47.8 P160 BX160MA4**	431
32	2564	2.0	45.2	32300	**F703_45.2 S4 ME4LB4**	**F703_45.2 S5 MX5SA4**	434	**F703_45.2 P132 BE132MB4**	**F703_45.2 P160 BX160MA4**	435
34	2387	1.2	42.1	20000	**F603_42.1 S4 ME4LB4**	**F603_42.1 S5 MX5SA4**	430	**F603_42.1 P132 BE132MB4**	**F603_42.1 P160 BX160MA4**	431
37	2204	1.3	38.8	20000	**F603_38.8 S4 ME4LB4**	**F603_38.8 S5 MX5SA4**	430	**F603_38.8 P132 BE132MB4**	**F603_38.8 P160 BX160MA4**	431

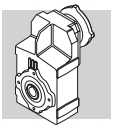

9.2 kW

n_2 min-1	M_2 Nm	S	i	R_{n2} N	IE2	IE3		IE2	IE3	
45	1820	1.6	32.1	20000	**F603_32.1 S4 ME4LB4**	**F603_32.1 S5 MX5SA4**	430	**F603_32.1 P132 BE132MB4**	**F603_32.1 P160 BX160MA4**	431
48	1741	1.0	30.0	8210	**F512_30.0 S4 ME4LB4**	**F512_30.0 S5 MX5SA4**	426	**F512_30.0 P132 BE132MB4**	**F512_30.0 P160 BX160MA4**	427
49	1680	1.7	29.6	20000	**F603_29.6 S4 ME4LB4**	**F603_29.6 S5 MX5SA4**	430	**F603_29.6 P132 BE132MB4**	**F603_29.6 P160 BX160MA4**	431
57	1442	1.3	25.4	20000	**F603_25.4 S4 ME4LB4**	**F603_25.4 S5 MX5SA4**	430	**F603_25.4 P132 BE132MB4**	**F603_25.4 P160 BX160MA4**	431
59	1393	2.9	24.6	28300	**F703_24.6 S4 ME4LB4**	**F703_24.6 S5 MX5SA4**	434	**F703_24.6 P132 BE132MB4**	**F703_24.6 P160 BX160MA4**	435
61	1379	1.2	23.8	8170	**F512_23.8 S4 ME4LB4**	**F512_23.8 S5 MX5SA4**	426	**F512_23.8 P132 BE132MB4**	**F512_23.8 P160 BX160MA4**	427
62	1331	1.4	23.5	20000	**F603_23.5 S4 ME4LB4**	**F603_23.5 S5 MX5SA4**	430	**F603_23.5 P132 BE132MB4**	**F603_23.5 P160 BX160MA4**	431
64	1282	3.4	22.6	27800	**F703_22.6 S4 ME4LB4**	**F703_22.6 S5 MX5SA4**	434	**F703_22.6 P132 BE132MB4**	**F703_22.6 P160 BX160MA4**	435
69	1184	3.4	20.9	27200	**F703_20.9 S4 ME4LB4**	**F703_20.9 S5 MX5SA4**	434	**F703_20.9 P132 BE132MB4**	**F703_20.9 P160 BX160MA4**	435
70	1172	1.6	20.7	20000	**F603_20.7 S4 ME4LB4**	**F603_20.7 S5 MX5SA4**	430	**F603_20.7 P132 BE132MB4**	**F603_20.7 P160 BX160MA4**	431
76	1082	1.8	19.1	20000	**F603_19.1 S4 ME4LB4**	**F603_19.1 S5 MX5SA4**	430	**F603_19.1 P132 BE132MB4**	**F603_19.1 P160 BX160MA4**	431
77	1095	1.0	18.9	4920	**F412_18.9 S4 ME4LB4**		422	**F412_18.9 P132 BE132MB4**		423
77	1091	1.4	18.8	8020	**F512_18.8 S4 ME4LB4**	**F512_18.8 S5 MX5SA4**	426	**F512_18.8 P132 BE132MB4**	**F512_18.8 P160 BX160MA4**	427
85	992	1.1	17.1	5000	**F412_17.1 S4 ME4LB4**		422	**F412_17.1 P132 BE132MB4**		423
92	890	2.1	15.7	20000	**F603_15.7 S4 ME4LB4**	**F603_15.7 S5 MX5SA4**	430	**F603_15.7 P132 BE132MB4**	**F603_15.7 P160 BX160MA4**	431
99	848	1.2	14.6	5070	**F412_14.6 S4 ME4LB4**		422	**F412_14.6 P132 BE132MB4**		423
100	821	2.3	14.5	20000	**F603_14.5 S4 ME4LB4**	**F603_14.5 S5 MX5SA4**	430	**F603_14.5 P132 BE132MB4**	**F603_14.5 P160 BX160MA4**	431
104	810	1.8	14.0	7700	**F512_14.0 S4 ME4LB4**	**F512_14.0 S5 MX5SA4**	426	**F512_14.0 P132 BE132MB4**	**F512_14.0 P160 BX160MA4**	427
114	722	2.6	12.7	19700	**F603_12.7 S4 ME4LB4**	**F603_12.7 S5 MX5SA4**	430	**F603_12.7 P132 BE132MB4**	**F603_12.7 P160 BX160MA4**	431
123	667	2.8	11.8	19300	**F603_11.8 S4 ME4LB4**	**F603_11.8 S5 MX5SA4**	430	**F603_11.8 P132 BE132MB4**	**F603_11.8 P160 BX160MA4**	431
131	644	2.1	11.1	7400	**F512_11.1 S4 ME4LB4**	**F512_11.1 S5 MX5SA4**	426	**F512_11.1 P132 BE132MB4**	**F512_11.1 P160 BX160MA4**	427
135	624	1.4	10.8	5080	**F412_10.8 S4 ME4LB4**		422	**F412_10.8 P132 BE132MB4**		423
135	623	1.0	10.7	3660	**F312_10.7 S4 ME4LB4**		418	**F312_10.7 P132 BE132MB4**		419
149	551	3.5	9.7	18400	**F603_9.7 S4 ME4LB4**	**F603_9.7 S5 MX5SA4**	430	**F603_9.7 P132 BE132MB4**	**F603_9.7 P160 BX160MA4**	431
159	529	1.3	9.1	5080	**F412_9.1 S4 ME4LB4**		422	**F412_9.1 P132 BE132MB4**		423
160	525	2.1	9.1	7040	**F512_9.1 S4 ME4LB4**	**F512_9.1 S5 MX5SA4**	426	**F512_9.1 P132 BE132MB4**	**F512_9.1 P160 BX160MA4**	427
202	417	2.3	7.2	6700	**F512_7.2 S4 ME4LB4**	**F512_7.2 S5 MX5SA4**	426	**F512_7.2 P132 BE132MB4**	**F512_7.2 P160 BX160MA4**	427
209	403	1.0	6.9	3450	**F312_6.9 S4 ME4LB4**		418	**F312_6.9 P132 BE132MB4**		419
216	390	1.6	6.7	4890	**F412_6.7 S4 ME4LB4**		422	**F412_6.7 P132 BE132MB4**		423
263	318	3.4	11.1	6340	**F512_11.1 S4 ME4LB2**		426	**F512_11.1 P132 BE132MB2**		427
271	308	2.4	10.8	4680	**F412_10.8 S4 ME4LB2**		422	**F412_10.8 P132 BE132MB2**		423
320	261	2.3	9.1	4560	**F412_9.1 S4 ME4LB2**		422	**F412_9.1 P132 BE132MB2**		423
323	259	3.5	9.1	5980	**F512_9.1 S4 ME4LB2**		426	**F512_9.1 P132 BE132MB2**		427
434	192	2.7	6.7	4270	**F412_6.7 S4 ME4LB2**		422	**F412_6.7 P132 BE132MB2**		423

11 kW

n_2 min-1	M_2 Nm	S	i	R_{n2} N	IE2	IE3		IE2	IE3	
6.4	14994	0.9	231.4	55000	**F904_231.4 S5 ME5SA4**	**F904_231.4 S5 MX5SB4**	440	**F904_231.4 P160 BE160M4**	**F904_231.4 P160 BX160MB4**	441
6.9	13841	1.0	213.6	55000	**F904_213.6 S5 ME5SA4**	**F904_213.6 S5 MX5SB4**	440	**F904_213.6 P160 BE160M4**	**F904_213.6 P160 BX160MB4**	441
7.6	13001	1.1	194.2	55000	**F903_194.2 S5 ME5SA4**	**F903_194.2 S5 MX5SB4**	440	**F903_194.2 P160 BE160M4**	**F903_194.2 P160 BX160MB4**	441
8.2	12001	1.2	179.2	55000	**F903_179.2 S5 ME5SA4**	**F903_179.2 S5 MX5SB4**	440	**F903_179.2 P160 BE160M4**	**F903_179.2 P160 BX160MB4**	441
9.0	10903	1.3	162.8	55000	**F903_162.8 S5 ME5SA4**	**F903_162.8 S5 MX5SB4**	440	**F903_162.8 P160 BE160M4**	**F903_162.8 P160 BX160MB4**	441
9.8	10064	1.4	150.3	55000	**F903_150.3 S5 ME5SA4**	**F903_150.3 S5 MX5SB4**	440	**F903_150.3 P160 BE160M4**	**F903_150.3 P160 BX160MB4**	441
10.7	9196	1.5	137.3	55000	**F903_137.3 S5 ME5SA4**	**F903_137.3 S5 MX5SB4**	440	**F903_137.3 P160 BE160M4**	**F903_137.3 P160 BX160MB4**	441
11.1	8885	0.9	132.7	45000	**F803_132.7 S5 ME5SA4**	**F803_132.7 S5 MX5SB4**	437	**F803_132.7 P160 BE160M4**	**F803_132.7 P160 BX160MB4**	438
11.6	8489	1.6	126.8	55000	**F903_126.8 S5 ME5SA4**	**F903_126.8 S5 MX5SB4**	440	**F903_126.8 P160 BE160M4**	**F903_126.8 P160 BX160MB4**	441
12.0	8202	1.0	122.5	45000	**F803_122.5 S5 ME5SA4**	**F803_122.5 S5 MX5SB4**	437	**F803_122.5 P160 BE160M4**	**F803_122.5 P160 BX160MB4**	438
12.9	7617	1.1	113.8	45000	**F803_113.8 S5 ME5SA4**	**F803_113.8 S5 MX5SB4**	437	**F803_113.8 P160 BE160M4**	**F803_113.8 P160 BX160MB4**	438
13.1	7496	1.9	111.9	55000	**F903_111.9 S5 ME5SA4**	**F903_111.9 S5 MX5SB4**	440	**F903_111.9 P160 BE160M4**	**F903_111.9 P160 BX160MB4**	441
14.0	7031	1.1	105.0	44400	**F803_105.0 S5 ME5SA4**	**F803_105.0 S5 MX5SB4**	437	**F803_105.0 P160 BE160M4**	**F803_105.0 P160 BX160MB4**	438
14.2	6919	2.0	103.3	55000	**F903_103.3 S5 ME5SA4**	**F903_103.3 S5 MX5SB4**	440	**F903_103.3 P160 BE160M4**	**F903_103.3 P160 BX160MB4**	441
15.4	6412	2.2	95.8	55000	**F903_95.8 S5 ME5SA4**	**F903_95.8 S5 MX5SB4**	440	**F903_95.8 P160 BE160M4**	**F903_95.8 P160 BX160MB4**	441
15.9	6181	1.3	92.3	44100	**F803_92.3 S5 ME5SA4**	**F803_92.3 S5 MX5SB4**	437	**F803_92.3 P160 BE160M4**	**F803_92.3 P160 BX160MB4**	438
16.6	5919	2.4	88.4	55000	**F903_88.4 S5 ME5SA4**	**F903_88.4 S5 MX5SB4**	440	**F903_88.4 P160 BE160M4**	**F903_88.4 P160 BX160MB4**	441
17.3	5705	1.4	85.2	44000	**F803_85.2 S5 ME5SA4**	**F803_85.2 S5 MX5SB4**	437	**F803_85.2 P160 BE160M4**	**F803_85.2 P160 BX160MB4**	438
19.2	5132	2.7	76.7	55000	**F903_76.7 S5 ME5SA4**	**F903_76.7 S5 MX5SB4**	440	**F903_76.7 P160 BE160M4**	**F903_76.7 P160 BX160MB4**	441
19.3	5106	1.6	76.3	42800	**F803_76.3 S5 ME5SA4**	**F803_76.3 S5 MX5SB4**	437	**F803_76.3 P160 BE160M4**	**F803_76.3 P160 BX160MB4**	438
20.0	4925	1.0	73.6	33500	**F703_73.6 S5 ME5SA4**	**F703_73.6 S5 MX5SB4**	434	**F703_73.6 P160 BE160M4**	**F703_73.6 P160 BX160MB4**	435

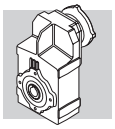

11 kW

n_2 min-1	M_2 Nm	S	i	R_{n2} N	IE2	IE3		IEC IE2	IEC IE3	
20.8	4738	3.0	70.8	55000	**F903_70.8 S5 ME5SA4**	**F903_70.8 S5 MX5SB4**	440	**F903_70.8 P160 BE160M4**	**F903_70.8 P160 BX160MB4**	441
20.9	4713	1.7	70.4	42500	**F803_70.4 S5 ME5SA4**	**F803_70.4 S5 MX5SB4**	437	**F803_70.4 P160 BE160M4**	**F803_70.4 P160 BX160MB4**	438
21.6	4547	1.1	67.9	33100	**F703_67.9 S5 ME5SA4**	**F703_67.9 S5 MX5SB4**	434	**F703_67.9 P160 BE160M4**	**F703_67.9 P160 BX160MB4**	435
23.5	4185	1.2	62.5	32900	**F703_62.5 S5 ME5SA4**	**F703_62.5 S5 MX5SB4**	434	**F703_62.5 P160 BE160M4**	**F703_62.5 P160 BX160MB4**	435
23.7	4158	3.4	62.1	55000				**F903_62.1 P160 BE160M4**	**F903_62.1 P160 BX160MB4**	441
23.9	4115	1.9	61.5	41100	**F803_61.5 S5 ME5SA4**	**F803_61.5 S5 MX5SB4**	437	**F803_61.5 P160 BE160M4**	**F803_61.5 P160 BX160MB4**	438
25.5	3863	1.3	57.7	32500	**F703_57.7 S5 ME5SA4**	**F703_57.7 S5 MX5SB4**	434	**F703_57.7 P160 BE160M4**	**F703_57.7 P160 BX160MB4**	435
25.9	3799	2.1	56.7	40800	**F803_56.7 S5 ME5SA4**	**F803_56.7 S5 MX5SB4**	437	**F803_56.7 P160 BE160M4**	**F803_56.7 P160 BX160MB4**	438
29.9	3288	2.4	49.1	39100				**F803_49.1 P160 BE160M4**	**F803_49.1 P160 BX160MB4**	438
30	3278	1.5	49.0	31800	**F703_49.0 S5 ME5SA4**	**F703_49.0 S5 MX5SB4**	434	**F703_49.0 P160 BE160M4**	**F703_49.0 P160 BX160MB4**	435
31	3203	0.9	47.8	20000	**F603_47.8 S5 ME5SA4**	**F603_47.8 S5 MX5SB4**	430	**F603_47.8 P160 BE160M4**	**F603_47.8 P160 BX160MB4**	431
32	3035	2.6	45.3	38900				**F803_45.3 P160 BE160M4**	**F803_45.3 P160 BX160MB4**	438
33	3026	1.7	45.2	31300	**F703_45.2 S5 ME5SA4**	**F703_45.2 S5 MX5SB4**	434	**F703_45.2 P160 BE160M4**	**F703_45.2 P160 BX160MB4**	435
35	2818	1.0	42.1	20000	**F603_42.1 S5 ME5SA4**	**F603_42.1 S5 MX5SB4**	430	**F603_42.1 P160 BE160M4**	**F603_42.1 P160 BX160MB4**	431
38	2611	3.1	39.0	36400				**F803_39.0 P160 BE160M4**	**F803_39.0 P160 BX160MB4**	438
38	2601	1.1	38.8	20000	**F603_38.8 S5 ME5SA4**	**F603_38.8 S5 MX5SB4**	430	**F603_38.8 P160 BE160M4**	**F603_38.8 P160 BX160MB4**	431
38	2571	1.9	38.4	30200				**F703_38.4 P160 BE160M4**	**F703_38.4 P160 BX160MB4**	435
41	2411	3.3	36.0	35600				**F803_36.0 P160 BE160M4**	**F803_36.0 P160 BX160MB4**	438
41	2373	2.1	35.4	29600				**F703_35.4 P160 BE160M4**	**F703_35.4 P160 BX160MB4**	435
46	2148	1.3	32.1	20000	**F603_32.1 S5 ME5SA4**	**F603_32.1 S5 MX5SB4**	430	**F603_32.1 P160 BE160M4**	**F603_32.1 P160 BX160MB4**	431
49	2009	2.5	30.0	29000				**F703_30.0 P160 BE160M4**	**F703_30.0 P160 BX160MB4**	435
50	1983	1.5	29.6	20000	**F603_29.6 S5 ME5SA4**	**F603_29.6 S5 MX5SB4**	430	**F603_29.6 P160 BE160M4**	**F603_29.6 P160 BX160MB4**	431
53	1854	2.5	27.7	28300				**F703_27.7 P160 BE160M4**	**F703_27.7 P160 BX160MB4**	435
58	1702	1.1	25.4	20000	**F603_25.4 S5 ME5SA4**	**F603_25.4 S5 MX5SB4**	430	**F603_25.4 P160 BE160M4**	**F603_25.4 P160 BX160MB4**	431
60	1644	2.4	24.6	27800	**F703_24.6 S5 ME5SA4**	**F703_24.6 S5 MX5SB4**	434	**F703_24.6 P160 BE160M4**	**F703_24.6 P160 BX160MB4**	435
62	1628	1.0	23.8	7500	**F512_23.8 S5 ME5SA4**	**F512_23.8 S5 MX5SB4**	426	**F512_23.8 P160 BE160M4**	**F512_23.8 P160 BX160MB4**	427
63	1571	1.2	23.5	20000	**F603_23.5 S5 ME5SA4**	**F603_23.5 S5 MX5SB4**	430	**F603_23.5 P160 BE160M4**	**F603_23.5 P160 BX160MB4**	431
65	1514	2.9	22.6	27300	**F703_22.6 S5 ME5SA4**	**F703_22.6 S5 MX5SB4**	434	**F703_22.6 P160 BE160M4**	**F703_22.6 P160 BX160MB4**	435
70	1397	2.9	20.9	26800	**F703_20.9 S5 ME5SA4**	**F703_20.9 S5 MX5SB4**	434	**F703_20.9 P160 BE160M4**	**F703_20.9 P160 BX160MB4**	435
71	1383	1.4	20.7	20000	**F603_20.7 S5 ME5SA4**	**F603_20.7 S5 MX5SB4**	430	**F603_20.7 P160 BE160M4**	**F603_20.7 P160 BX160MB4**	431
77	1277	1.5	19.1	20000	**F603_19.1 S5 ME5SA4**	**F603_19.1 S5 MX5SB4**	430	**F603_19.1 P160 BE160M4**	**F603_19.1 P160 BX160MB4**	431
78	1287	1.2	18.8	7490	**F512_18.8 S5 ME5SA4**	**F512_18.8 S5 MX5SB4**	426	**F512_18.8 P160 BE160M4**	**F512_18.8 P160 BX160MB4**	427
94	1050	1.8	15.7	20000	**F603_15.7 S5 ME5SA4**	**F603_15.7 S5 MX5SB4**	430	**F603_15.7 P160 BE160M4**	**F603_15.7 P160 BX160MB4**	431
102	969	2.0	14.5	20000	**F603_14.5 S5 ME5SA4**	**F603_14.5 S5 MX5SB4**	430	**F603_14.5 P160 BE160M4**	**F603_14.5 P160 BX160MB4**	431
105	956	1.5	14.0	7310	**F512_14.0 S5 ME5SA4**	**F512_14.0 S5 MX5SB4**	426	**F512_14.0 P160 BE160M4**	**F512_14.0 P160 BX160MB4**	427
115	853	2.2	12.7	19400	**F603_12.7 S5 ME5SA4**	**F603_12.7 S5 MX5SB4**	430	**F603_12.7 P160 BE160M4**	**F603_12.7 P160 BX160MB4**	431
125	787	2.4	11.8	19000	**F603_11.8 S5 ME5SA4**	**F603_11.8 S5 MX5SB4**	430	**F603_11.8 P160 BE160M4**	**F603_11.8 P160 BX160MB4**	431
132	760	1.8	11.1	7090	**F512_11.1 S5 ME5SA4**	**F512_11.1 S5 MX5SB4**	426	**F512_11.1 P160 BE160M4**	**F512_11.1 P160 BX160MB4**	427
151	650	2.9	9.7	18200	**F603_9.7 S5 ME5SA4**	**F603_9.7 S5 MX5SB4**	430	**F603_9.7 P160 BE160M4**	**F603_9.7 P160 BX160MB4**	431
162	619	1.8	9.1	6770	**F512_9.1 S5 ME5SA4**	**F512_9.1 S5 MX5SB4**	426	**F512_9.1 P160 BE160M4**	**F512_9.1 P160 BX160MB4**	427
164	600	3.2	9.0	17800	**F603_9.0 S5 ME5SA4**	**F603_9.0 S5 MX5SB4**	430	**F603_9.0 P160 BE160M4**	**F603_9.0 P160 BX160MB4**	431
204	492	2.0	7.2	6490	**F512_7.2 S5 ME5SA4**	**F512_7.2 S5 MX5SB4**	426	**F512_7.2 P160 BE160M4**	**F512_7.2 P160 BX160MB4**	427
265	377	2.9	11.1	6170	**F512_11.1 S5 ME5SA2**		426	**F512_11.1 P160 BE160MA2**		427
325	307	2.9	9.1	5840	**F512_9.1 S5 ME5SA2**		426	**F512_9.1 P160 BE160MA2**		427
409	244	3.3	7.2	5510	**F512_7.2 S5 ME5SA2**		426	**F512_7.2 P160 BE160MA2**		427

15 kW

n_2 min-1	M_2 Nm	S	i	R_{n2} N	IE2	IE3		IEC IE2	IEC IE3	
9.0	14840	0.9	162.8	55000	**F903_162.8 S5 ME5LA4**	**F903_162.8 S5 MX5LA4**	440	**F903_162.8 P160 BE160L4**	**F903_162.8 P160 BX160L4**	441
9.8	13699	1.0	150.3	55000	**F903_150.3 S5 ME5LA4**	**F903_150.3 S5 MX5LA4**	440	**F903_150.3 P160 BE160L4**	**F903_150.3 P160 BX160L4**	441
10.7	12517	1.1	137.3	55000	**F903_137.3 S5 ME5LA4**	**F903_137.3 S5 MX5LA4**	440	**F903_137.3 P160 BE160L4**	**F903_137.3 P160 BX160L4**	441
11.6	11554	1.2	126.8	55000	**F903_126.8 S5 ME5LA4**	**F903_126.8 S5 MX5LA4**	440	**F903_126.8 P160 BE160L4**	**F903_126.8 P160 BX160L4**	441
13.1	10203	1.4	111.9	55000	**F903_111.9 S5 ME5LA4**	**F903_111.9 S5 MX5LA4**	440	**F903_111.9 P160 BE160L4**	**F903_111.9 P160 BX160L4**	441
14.2	9418	1.5	103.3	55000	**F903_103.3 S5 ME5LA4**	**F903_103.3 S5 MX5LA4**	440	**F903_103.3 P160 BE160L4**	**F903_103.3 P160 BX160L4**	441
15.4	8728	1.6	95.8	55000	**F903_95.8 S5 ME5LA4**	**F903_95.8 S5 MX5LA4**	440	**F903_95.8 P160 BE160L4**	**F903_95.8 P160 BX160L4**	441
15.9	8413	1.0	92.3	41300	**F803_92.3 S5 ME5LA4**	**F803_92.3 S5 MX5LA4**	437	**F803_92.3 P160 BE160L4**	**F803_92.3 P160 BX160L4**	438
16.6	8056	1.7	88.4	55000	**F903_88.4 S5 ME5LA4**	**F903_88.4 S5 MX5LA4**	440	**F903_88.4 P160 BE160L4**	**F903_88.4 P160 BX160L4**	441
17.3	7766	1.0	85.2	40800	**F803_85.2 S5 ME5LA4**	**F803_85.2 S5 MX5LA4**	437	**F803_85.2 P160 BE160L4**	**F803_85.2 P160 BX160L4**	438
19.2	6986	2.0	76.7	55000	**F903_76.7 S5 ME5LA4**	**F903_76.7 S5 MX5LA4**	440	**F903_76.7 P160 BE160L4**	**F903_76.7 P160 BX160L4**	441
19.3	6949	1.2	76.3	40500	**F803_76.3 S5 ME5LA4**	**F803_76.3 S5 MX5LA4**	437	**F803_76.3 P160 BE160L4**	**F803_76.3 P160 BX160L4**	438
20.8	6449	2.2	70.8	55000	**F903_70.8 S5 ME5LA4**	**F903_70.8 S5 MX5LA4**	440	**F903_70.8 P160 BE160L4**	**F903_70.8 P160 BX160L4**	441

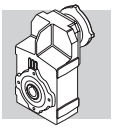

15 kW

n_2 min-1	M_2 Nm	S	i	R_{n2} N	IE2	IE3		IEC IE2	IEC IE3	
20.9	6415	1.2	70.4	39900	**F803_70.4 S5 ME5LA4**	**F803_70.4 S5 MX5LA4**	437	**F803_70.4 P160 BE160L4**	**F803_70.4 P160 BX160L4**	438
23.5	5696	0.9	62.5	31300	**F703_62.5 S5 ME5LA4**	**F703_62.5 S5 MX5LA4**	434	**F703_62.5 P160 BE160L4**	**F703_62.5 P160 BX160L4**	435
23.7	5660	2.5	62.1	55000				**F903_62.1 P160 BE160L4**	**F903_62.1 P160 BX160L4**	441
23.9	5601	1.4	61.5	38700	**F803_61.5 S5 ME5LA4**	**F803_61.5 S5 MX5LA4**	437	**F803_61.5 P160 BE160L4**	**F803_61.5 P160 BX160L4**	438
25.5	5258	1.0	57.7	29700	**F703_57.7 S5 ME5LA4**	**F703_57.7 S5 MX5LA4**	434	**F703_57.7 P160 BE160L4**	**F703_57.7 P160 BX160L4**	435
25.6	5224	2.7	57.3	55000				**F903_57.3 P160 BE160L4**	**F903_57.3 P160 BX160L4**	441
25.9	5170	1.5	56.7	38600	**F803_56.7 S5 ME5LA4**	**F803_56.7 S5 MX5LA4**	437	**F803_56.7 P160 BE160L4**	**F803_56.7 P160 BX160L4**	438
29.5	4548	3.1	49.9	54400				**F903_49.9 P160 BE160L4**	**F903_49.9 P160 BX160L4**	441
29.9	4476	1.8	49.1	37800				**F803_49.1 P160 BE160L4**	**F803_49.1 P160 BX160L4**	438
30	4462	1.1	49.0	29400	**F703_49.0 S5 ME5LA4**	**F703_49.0 S5 MX5LA4**	434	**F703_49.0 P160 BE160L4**	**F703_49.0 P160 BX160L4**	435
32	4198	3.3	46.1	53500				**F903_46.1 P160 BE160L4**	**F903_46.1 P160 BX160L4**	441
32	4131	1.9	45.3	37200				**F803_45.3 P160 BE160L4**	**F803_45.3 P160 BX160L4**	438
33	4119	1.2	45.2	29100	**F703_45.2 S5 ME5LA4**	**F703_45.2 S5 MX5LA4**	434	**F703_45.2 P160 BE160L4**	**F703_45.2 P160 BX160L4**	435
38	3554	2.3	39.0	35800				**F803_39.0 P160 BE160L4**	**F803_39.0 P160 BX160L4**	438
38	3499	1.4	38.4	28600				**F703_38.4 P160 BE160L4**	**F703_38.4 P160 BX160L4**	435
41	3281	2.4	36.0	35200				**F803_36.0 P160 BE160L4**	**F803_36.0 P160 BX160L4**	438
41	3230	1.5	35.4	28200				**F703_35.4 P160 BE160L4**	**F703_35.4 P160 BX160L4**	435
46	2924	1.0	32.1	20000	**F603_32.1 S5 ME5LA4**	**F603_32.1 S5 MX5LA4**	430	**F603_32.1 P160 BE160L4**	**F603_32.1 P160 BX160L4**	431
49	2734	1.8	30.0	27700				**F703_30.0 P160 BE160L4**	**F703_30.0 P160 BX160L4**	435
50	2699	1.1	29.6	20000	**F603_29.6 S5 ME5LA4**	**F603_29.6 S5 MX5LA4**	430	**F603_29.6 P160 BE160L4**	**F603_29.6 P160 BX160L4**	431
53	2524	1.9	27.7	27100				**F703_27.7 P160 BE160L4**	**F703_27.7 P160 BX160L4**	435
58	2299	2.7	25.2	32900	**F803_25.2 S5 ME5LA4**	**F803_25.2 S5 MX5LA4**	437	**F803_25.2 P160 BE160L4**	**F803_25.2 P160 BX160L4**	438
60	2238	1.8	24.6	26500	**F703_24.6 S5 ME5LA4**	**F703_24.6 S5 MX5LA4**	434	**F703_24.6 P160 BE160L4**	**F703_24.6 P160 BX160L4**	435
63	2138	0.9	23.5	20000	**F603_23.5 S5 ME5LA4**	**F603_23.5 S5 MX5LA4**	430	**F603_23.5 P160 BE160L4**	**F603_23.5 P160 BX160L4**	431
65	2060	2.1	22.6	26200	**F703_22.6 S5 ME5LA4**	**F703_22.6 S5 MX5LA4**	434	**F703_22.6 P160 BE160L4**	**F703_22.6 P160 BX160L4**	435
67	2008	3.3	22.0	31900	**F803_22.0 S5 ME5LA4**	**F803_22.0 S5 MX5LA4**	437	**F803_22.0 P160 BE160L4**	**F803_22.0 P160 BX160L4**	438
70	1902	2.1	20.9	25700	**F703_20.9 S5 ME5LA4**	**F703_20.9 S5 MX5LA4**	434	**F703_20.9 P160 BE160L4**	**F703_20.9 P160 BX160L4**	435
71	1883	1.0	20.7	20000	**F603_20.7 S5 ME5LA4**	**F603_20.7 S5 MX5LA4**	430	**F603_20.7 P160 BE160L4**	**F603_20.7 P160 BX160L4**	431
72	1853	3.3	20.3	31300	**F803_20.3 S5 ME5LA4**	**F803_20.3 S5 MX5LA4**	437	**F803_20.3 P160 BE160L4**	**F803_20.3 P160 BX160L4**	438
77	1738	1.1	19.1	20000	**F603_19.1 S5 ME5LA4**	**F603_19.1 S5 MX5LA4**	430	**F603_19.1 P160 BE160L4**	**F603_19.1 P160 BX160L4**	431
78	1752	0.9	18.8	6800	**F512_18.8 S5 ME5LA4**	**F512_18.8 S5 MX5LA4**	426	**F512_18.8 P160 BE160L4**	**F512_18.8 P160 BX160L4**	427
83	1614	2.7	17.7	24900	**F703_17.7 S5 ME5LA4**	**F703_17.7 S5 MX5LA4**	434	**F703_17.7 P160 BE160L4**	**F703_17.7 P160 BX160L4**	435
90	1490	2.7	16.3	24400	**F703_16.3 S5 ME5LA4**	**F703_16.3 S5 MX5LA4**	434	**F703_16.3 P160 BE160L4**	**F703_16.3 P160 BX160L4**	435
94	1429	1.3	15.7	19600	**F603_15.7 S5 ME5LA4**	**F603_15.7 S5 MX5LA4**	430	**F603_15.7 P160 BE160L4**	**F603_15.7 P160 BX160L4**	431
102	1319	1.4	14.5	19200	**F603_14.5 S5 ME5LA4**	**F603_14.5 S5 MX5LA4**	430	**F603_14.5 P160 BE160L4**	**F603_14.5 P160 BX160L4**	431
105	1301	1.1	14.0	6450	**F512_14.0 S5 ME5LA4**	**F512_14.0 S5 MX5LA4**	426	**F512_14.0 P160 BE160L4**	**F512_14.0 P160 BX160L4**	427
106	1266	3.1	13.9	23600	**F703_13.9 S5 ME5LA4**	**F703_13.9 S5 MX5LA4**	434	**F703_13.9 P160 BE160L4**	**F703_13.9 P160 BX160L4**	435
115	1168	3.1	12.8	23100	**F703_12.8 S5 ME5LA4**	**F703_12.8 S5 MX5LA4**	434	**F703_12.8 P160 BE160L4**	**F703_12.8 P160 BX160L4**	435
115	1160	1.6	12.7	18800	**F603_12.7 S5 ME5LA4**	**F603_12.7 S5 MX5LA4**	430	**F603_12.7 P160 BE160L4**	**F603_12.7 P160 BX160L4**	431
125	1071	1.8	11.8	18400	**F603_11.8 S5 ME5LA4**	**F603_11.8 S5 MX5LA4**	430	**F603_11.8 P160 BE160L4**	**F603_11.8 P160 BX160L4**	431
132	1034	1.3	11.1	6000	**F512_11.1 S5 ME5LA4**	**F512_11.1 S5 MX5LA4**	426	**F512_11.1 P160 BE160L4**	**F512_11.1 P160 BX160L4**	427
135	989	3.5	10.9	22300	**F703_10.9 S5 ME5LA4**	**F703_10.9 S5 MX5LA4**	434	**F703_10.9 P160 BE160L4**	**F703_10.9 P160 BX160L4**	435
147	913	3.5	10.0	21800	**F703_10.0 S5 ME5LA4**	**F703_10.0 S5 MX5LA4**	434	**F703_10.0 P160 BE160L4**	**F703_10.0 P160 BX160L4**	435
151	885	2.1	9.7	17700	**F603_9.7 S5 ME5LA4**	**F603_9.7 S5 MX5LA4**	430	**F603_9.7 P160 BE160L4**	**F603_9.7 P160 BX160L4**	431
162	843	1.3	9.1	5800	**F512_9.1 S5 ME5LA4**	**F512_9.1 S5 MX5LA4**	426	**F512_9.1 P160 BE160L4**	**F512_9.1 P160 BX160L4**	427
164	817	2.3	9.0	17300	**F603_9.0 S5 ME5LA4**	**F603_9.0 S5 MX5LA4**	430	**F603_9.0 P160 BE160L4**	**F603_9.0 P160 BX160L4**	431
204	670	1.5	7.2	5640	**F512_7.2 S5 ME5LA4**	**F512_7.2 S5 MX5LA4**	426	**F512_7.2 P160 BE160L4**	**F512_7.2 P160 BX160L4**	427

18.5 kW

n_2 min-1	M_2 Nm	S	i	R_{n2} N	IE2	IE3		IEC IE2	IEC IE3	
10.7	15327	0.9	137.3	55000				**F903_137.3 P180 BE180M4**	**F903_137.3 P180 BX180M4**	441
11.6	14148	1.0	126.8	55000				**F903_126.8 P180 BE180M4**	**F903_126.8 P180 BX180M4**	441
13.1	12493	1.1	111.9	55000				**F903_111.9 P180 BE180M4**	**F903_111.9 P180 BX180M4**	441
14.2	11532	1.2	103.3	55000				**F903_103.3 P180 BE180M4**	**F903_103.3 P180 BX180M4**	441
15.4	10687	1.3	95.8	55000				**F903_95.8 P180 BE180M4**	**F903_95.8 P180 BX180M4**	441
16.6	9865	1.4	88.4	55000				**F903_88.4 P180 BE180M4**	**F903_88.4 P180 BX180M4**	441
19.2	8554	1.6	76.7	55000				**F903_76.7 P180 BE180M4**	**F903_76.7 P180 BX180M4**	441
19.3	8510	0.9	76.3	38100				**F803_76.3 P180 BE180M4**	**F803_76.3 P180 BX180M4**	438
20.8	7896	1.8	70.8	55000				**F903_70.8 P180 BE180M4**	**F903_70.8 P180 BX180M4**	441

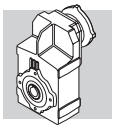

18.5 kW

n_2 min-1	M_2 Nm	S	i	R_{n2} N	IE2	IE3		IEC IE2	IEC IE3	
20.9	7855	1.0	70.4	37600				**F803_70.4 P180 BE180M4**	**F803_70.4 P180 BX180M4**	438
23.7	6930	2.0	62.1	55000				**F903_62.1 P180 BE180M4**	**F903_62.1 P180 BX180M4**	441
23.9	6859	1.2	61.5	37400				**F803_61.5 P180 BE180M4**	**F803_61.5 P180 BX180M4**	438
25.6	6397	2.2	57.3	55000				**F903_57.3 P180 BE180M4**	**F903_57.3 P180 BX180M4**	441
25.9	6331	1.3	56.7	36800				**F803_56.7 P180 BE180M4**	**F803_56.7 P180 BX180M4**	438
29.5	5568	2.5	49.9	55000				**F903_49.9 P180 BE180M4**	**F903_49.9 P180 BX180M4**	441
29.9	5480	1.5	49.1	35800				**F803_49.1 P180 BE180M4**	**F803_49.1 P180 BX180M4**	438
30	5464	0.9	49.0	27400				**F703_49.0 P180 BE180M4**	**F703_49.0 P180 BX180M4**	435
32	5140	2.7	46.1	55000				**F903_46.1 P180 BE180M4**	**F903_46.1 P180 BX180M4**	441
32	5059	1.6	45.3	35700				**F803_45.3 P180 BE180M4**	**F803_45.3 P180 BX180M4**	438
33	5043	1.0	45.2	27200				**F703_45.2 P180 BE180M4**	**F703_45.2 P180 BX180M4**	435
36	4520	3.1	40.5	52300				**F903_40.5 P180 BE180M4**	**F903_40.5 P180 BX180M4**	441
38	4352	1.8	39.0	35000				**F803_39.0 P180 BE180M4**	**F803_39.0 P180 BX180M4**	438
38	4285	1.2	38.4	27000				**F703_38.4 P180 BE180M4**	**F703_38.4 P180 BX180M4**	435
39	4172	3.2	37.4	51400				**F903_37.4 P180 BE180M4**	**F903_37.4 P180 BX180M4**	441
41	4018	2.0	36.0	34400				**F803_36.0 P180 BE180M4**	**F803_36.0 P180 BX180M4**	438
41	3955	1.3	35.4	26700				**F703_35.4 P180 BE180M4**	**F703_35.4 P180 BX180M4**	435
47	3488	2.3	31.3	33400				**F803_31.3 P180 BE180M4**	**F803_31.3 P180 BX180M4**	438
49	3348	1.5	30.0	26500				**F703_30.0 P180 BE180M4**	**F703_30.0 P180 BX180M4**	435
51	3219	2.5	28.8	33000				**F803_28.8 P180 BE180M4**	**F803_28.8 P180 BX180M4**	438
53	3090	1.5	27.7	26000				**F703_27.7 P180 BE180M4**	**F703_27.7 P180 BX180M4**	435
58	2815	2.2	25.2	32100				**F803_25.2 P180 BE180M4**	**F803_25.2 P180 BX180M4**	438
60	2741	1.5	24.6	25500				**F703_24.6 P180 BE180M4**	**F703_24.6 P180 BX180M4**	435
65	2523	1.7	22.6	25200				**F703_22.6 P180 BE180M4**	**F703_22.6 P180 BX180M4**	435
67	2458	2.7	22.0	31300				**F803_22.0 P180 BE180M4**	**F803_22.0 P180 BX180M4**	438
70	2329	1.7	20.9	24900				**F703_20.9 P180 BE180M4**	**F703_20.9 P180 BX180M4**	435
72	2269	2.7	20.3	30600				**F803_20.3 P180 BE180M4**	**F803_20.3 P180 BX180M4**	438
77	2128	0.9	19.1	19200				**F603_19.1 P180 BE180M4**	**F603_19.1 P180 BX180M4**	431
83	1976	2.2	17.7	24200				**F703_17.7 P180 BE180M4**	**F703_17.7 P180 BX180M4**	435
84	1964	3.4	17.6	29700				**F803_17.6 P180 BE180M4**	**F803_17.6 P180 BX180M4**	438
90	1824	2.2	16.3	23800				**F703_16.3 P180 BE180M4**	**F703_16.3 P180 BX180M4**	435
90	1813	3.4	16.2	29100				**F803_16.2 P180 BE180M4**	**F803_16.2 P180 BX180M4**	438
94	1750	1.1	15.7	18700				**F603_15.7 P180 BE180M4**	**F603_15.7 P180 BX180M4**	431
102	1615	1.2	14.5	18600				**F603_14.5 P180 BE180M4**	**F603_14.5 P180 BX180M4**	431
106	1550	2.5	13.9	23000				**F703_13.9 P180 BE180M4**	**F703_13.9 P180 BX180M4**	435
115	1430	2.5	12.8	22600				**F703_12.8 P180 BE180M4**	**F703_12.8 P180 BX180M4**	435
115	1421	1.3	12.7	18300				**F603_12.7 P180 BE180M4**	**F603_12.7 P180 BX180M4**	431
125	1312	1.4	11.8	17900				**F603_11.8 P180 BE180M4**	**F603_11.8 P180 BX180M4**	431
132	1267	1.1	11.1	5800				**F512_11.1 P180 BE180M4**	**F512_11.1 P180 BX180M4**	427
135	1211	2.8	10.9	21800				**F703_10.9 P180 BE180M4**	**F703_10.9 P180 BX180M4**	435
147	1118	2.9	10.0	21400				**F703_10.0 P180 BE180M4**	**F703_10.0 P180 BX180M4**	435
151	1083	1.8	9.7	17300				**F603_9.7 P180 BE180M4**	**F603_9.7 P180 BX180M4**	431
162	1032	1.1	9.1	5630				**F512_9.1 P180 BE180M4**	**F512_9.1 P180 BX180M4**	427
164	1000	1.9	9.0	16900				**F603_9.0 P180 BE180M4**	**F603_9.0 P180 BX180M4**	431
204	820	1.2	7.2	5400				**F512_7.2 P180 BE180M4**	**F512_7.2 P180 BX180M4**	427

22 kW

n_2 min-1	M_2 Nm	S	i	R_{n2} N	IE2	IE3		IEC IE2	IEC IE3	
13.1	14888	0.9	111.9	55000				**F903_111.9 P180 BE180L4**	**F903_111.9 P180 BX180L4**	441
14.2	13743	1.0	103.3	55000				**F903_103.3 P180 BE180L4**	**F903_103.3 P180 BX180L4**	441
15.4	12735	1.1	95.8	55000				**F903_95.8 P180 BE180L4**	**F903_95.8 P180 BX180L4**	441
16.6	11755	1.2	88.4	55000				**F903_88.4 P180 BE180L4**	**F903_88.4 P180 BX180L4**	441
19.2	10194	1.4	76.7	55000				**F903_76.7 P180 BE180L4**	**F903_76.7 P180 BX180L4**	441
20.8	9410	1.5	70.8	55000				**F903_70.8 P180 BE180L4**	**F903_70.8 P180 BX180L4**	441
23.7	8259	1.7	62.1	55000				**F903_62.1 P180 BE180L4**	**F903_62.1 P180 BX180L4**	441
23.9	8173	1.0	61.5	35400				**F803_61.5 P180 BE180L4**	**F803_61.5 P180 BX180L4**	438
25.6	7623	1.8	57.3	55000				**F903_57.3 P180 BE180L4**	**F903_57.3 P180 BX180L4**	441
25.9	7545	1.1	56.7	35000				**F803_56.7 P180 BE180L4**	**F803_56.7 P180 BX180L4**	438

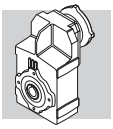

22 kW

n_2 min-1	M_2 Nm	S	i	R_{n2} N	IE2	IE3		IEC IE2	IEC IE3	
29.5	6636	2.1	49.9	54400				**F903_49.9 P180 BE180L4**	**F903_49.9 P180 BX180L4**	441
29.9	6531	1.2	49.1	34100				**F803_49.1 P180 BE180L4**	**F803_49.1 P180 BX180L4**	438
32	6125	2.3	46.1	53500				**F903_46.1 P180 BE180L4**	**F903_46.1 P180 BX180L4**	441
32	6028	1.3	45.3	34300				**F803_45.3 P180 BE180L4**	**F803_45.3 P180 BX180L4**	438
36	5386	2.6	40.5	52300				**F903_40.5 P180 BE180L4**	**F903_40.5 P180 BX180L4**	441
38	5187	1.5	39.0	33300				**F803_39.0 P180 BE180L4**	**F803_39.0 P180 BX180L4**	438
38	5106	1.0	38.4	25400				**F703_38.4 P180 BE180L4**	**F703_38.4 P180 BX180L4**	435
39	4972	2.7	37.4	51400				**F903_37.4 P180 BE180L4**	**F903_37.4 P180 BX180L4**	441
41	4788	1.7	36.0	33200				**F803_36.0 P180 BE180L4**	**F803_36.0 P180 BX180L4**	438
41	4713	1.1	35.4	25300				**F703_35.4 P180 BE180L4**	**F703_35.4 P180 BX180L4**	435
47	4156	1.9	31.3	32600				**F803_31.3 P180 BE180L4**	**F803_31.3 P180 BX180L4**	438
47	4122	3.2	31.0	49500				**F903_31.0 P180 BE180L4**	**F903_31.0 P180 BX180L4**	441
49	3990	1.3	30.0	25100				**F703_30.0 P180 BE180L4**	**F703_30.0 P180 BX180L4**	435
51	3836	2.1	28.8	32000				**F803_28.8 P180 BE180L4**	**F803_28.8 P180 BX180L4**	438
51	3805	3.2	28.6	48600				**F903_28.6 P180 BE180L4**	**F903_28.6 P180 BX180L4**	441
53	3683	1.3	27.7	24800				**F703_27.7 P180 BE180L4**	**F703_27.7 P180 BX180L4**	435
58	3355	1.8	25.2	31300				**F803_25.2 P180 BE180L4**	**F803_25.2 P180 BX180L4**	438
60	3266	1.2	24.6	24500				**F703_24.6 P180 BE180L4**	**F703_24.6 P180 BX180L4**	435
65	3006	1.4	22.6	24300				**F703_22.6 P180 BE180L4**	**F703_22.6 P180 BX180L4**	435
67	2929	2.3	22.0	30200				**F803_22.0 P180 BE180L4**	**F803_22.0 P180 BX180L4**	438
70	2775	1.4	20.9	24000				**F703_20.9 P180 BE180L4**	**F703_20.9 P180 BX180L4**	435
72	2704	2.3	20.3	29900				**F803_20.3 P180 BE180L4**	**F803_20.3 P180 BX180L4**	438
83	2355	1.9	17.7	23400				**F703_17.7 P180 BE180L4**	**F703_17.7 P180 BX180L4**	435
84	2341	2.9	17.6	29100				**F803_17.6 P180 BE180L4**	**F803_17.6 P180 BX180L4**	438
90	2174	1.8	16.3	23100				**F703_16.3 P180 BE180L4**	**F703_16.3 P180 BX180L4**	435
90	2161	2.9	16.2	28500				**F803_16.2 P180 BE180L4**	**F803_16.2 P180 BX180L4**	438
94	2085	0.9	15.7	18200				**F603_15.7 P180 BE180L4**	**F603_15.7 P180 BX180L4**	431
102	1925	1.0	14.5	18000				**F603_14.5 P180 BE180L4**	**F603_14.5 P180 BX180L4**	431
106	1847	2.1	13.9	22400				**F703_13.9 P180 BE180L4**	**F703_13.9 P180 BX180L4**	435
115	1705	2.1	12.8	22100				**F703_12.8 P180 BE180L4**	**F703_12.8 P180 BX180L4**	435
115	1693	1.1	12.7	17700				**F603_12.7 P180 BE180L4**	**F603_12.7 P180 BX180L4**	431
125	1563	1.2	11.8	17400				**F603_11.8 P180 BE180L4**	**F603_11.8 P180 BX180L4**	431
135	1443	2.4	10.9	21400				**F703_10.9 P180 BE180L4**	**F703_10.9 P180 BX180L4**	435
147	1332	2.4	10.0	21000				**F703_10.0 P180 BE180L4**	**F703_10.0 P180 BX180L4**	435
151	1291	1.5	9.7	16900				**F603_9.7 P180 BE180L4**	**F603_9.7 P180 BX180L4**	431
164	1192	1.6	9.0	16500				**F603_9.0 P180 BE180L4**	**F603_9.0 P180 BX180L4**	431
204	977	1.0	7.2	5250				**F512_7.2 P180 BE180L4**	**F512_7.2 P180 BX180L4**	427

30 kW

n_2 min-1	M_2 Nm	S	i	R_{n2} N	IE...		IEC IE2*	IEC IE3	
16.6	16022	0.9	88.4	52200			**F903_88.4 P200 IEC200L4**	**F903_88.4 P200 BX200LA4**	441
19.2	13893	1.0	76.7	52400			**F903_76.7 P200 IEC200L4**	**F903_76.7 P200 BX200LA4**	441
20.8	12825	1.1	70.8	52100			**F903_70.8 P200 IEC200L4**	**F903_70.8 P200 BX200LA4**	441
23.7	11256	1.2	62.1	51800			**F903_62.1 P200 IEC200L4**	**F903_62.1 P200 BX200LA4**	441
25.6	10390	1.3	57.3	51400			**F903_57.3 P200 IEC200L4**	**F903_57.3 P200 BX200LA4**	441
29.5	9044	1.5	49.9	50800			**F903_49.9 P200 IEC200L4**	**F903_49.9 P200 BX200LA4**	441
32	8348	1.7	46.1	50200			**F903_46.1 P200 IEC200L4**	**F903_46.1 P200 BX200LA4**	441
32	8216	1.0	45.3	30900			**F803_45.3 P200 IEC200L4**	**F803_45.3 P200 BX200LA4**	438
36	7341	1.9	40.5	49400			**F903_40.5 P200 IEC200L4**	**F903_40.5 P200 BX200LA4**	441
38	7069	1.1	39.0	31000			**F803_39.0 P200 IEC200L4**	**F803_39.0 P200 BX200LA4**	438
39	6776	2.0	37.4	48700			**F903_37.4 P200 IEC200L4**	**F903_37.4 P200 BX200LA4**	441
41	6525	1.2	36.0	30600			**F803_36.0 P200 IEC200L4**	**F803_36.0 P200 BX200LA4**	438
47	5664	1.4	31.3	29900			**F803_31.3 P200 IEC200L4**	**F803_31.3 P200 BX200LA4**	438
47	5618	2.3	31.0	47300			**F903_31.0 P200 IEC200L4**	**F903_31.0 P200 BX200LA4**	441

***电机额定功率大于22KW时，技术资料仅供参考，选型时必参考电机制造商提供的信息。**

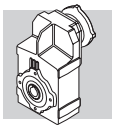

30 kW

n_2 min-1	M_2 Nm	S	i	R_{n2} N	IE...		IE2*	IE3	
49	5438	0.9	30.0	22300			**F703_30.0 P200 IEC200L4**	**F703_30.0 P200 BX200LA4**	435
51	5229	1.5	28.8	29500			**F803_28.8 P200 IEC200L4**	**F803_28.8 P200 BX200LA4**	438
51	5186	2.3	28.6	46600			**F903_28.6 P200 IEC200L4**	**F903_28.6 P200 BX200LA4**	441
53	5019	0.9	27.7	22200			**F703_27.7 P200 IEC200L4**	**F703_27.7 P200 BX200LA4**	435
58	4601	2.6	25.4	45500			**F903_25.4 P200 IEC200L4**	**F903_25.4 P200 BX200LA4**	441
58	4572	1.2	25.2	29500			**F803_25.2 P200 IEC200L4**	**F803_25.2 P200 BX200LA4**	438
66	4039	3.0	22.3	44400			**F903_22.3 P200 IEC200L4**	**F903_22.3 P200 BX200LA4**	441
67	3992	1.7	22.0	29000			**F803_22.0 P200 IEC200L4**	**F803_22.0 P200 BX200LA4**	438
71	3728	3.0	20.6	43600			**F903_20.6 P200 IEC200L4**	**F903_20.6 P200 BX200LA4**	441
72	3685	1.7	20.3	28500			**F803_20.3 P200 IEC200L4**	**F803_20.3 P200 BX200LA4**	438
83	3209	1.4	17.7	21800			**F703_17.7 P200 IEC200L4**	**F703_17.7 P200 BX200LA4**	435
84	3190	2.1	17.6	27900			**F803_17.6 P200 IEC200L4**	**F803_17.6 P200 BX200LA4**	438
90	2963	1.4	16.3	21500			**F703_16.3 P200 IEC200L4**	**F703_16.3 P200 BX200LA4**	435
90	2945	2.1	16.2	27400			**F803_16.2 P200 IEC200L4**	**F803_16.2 P200 BX200LA4**	438
105	2534	2.7	14.0	26700			**F803_14.0 P200 IEC200L4**	**F803_14.0 P200 BX200LA4**	438
106	2517	1.5	13.9	21100			**F703_13.9 P200 IEC200L4**	**F703_13.9 P200 BX200LA4**	435
114	2339	2.7	12.9	26200			**F803_12.9 P200 IEC200L4**	**F803_12.9 P200 BX200LA4**	438
115	2323	1.5	12.8	20900			**F703_12.8 P200 IEC200L4**	**F703_12.8 P200 BX200LA4**	435
135	1967	1.8	10.9	20300			**F703_10.9 P200 IEC200L4**	**F703_10.9 P200 BX200LA4**	435
142	1874	3.0	10.3	24900			**F803_10.3 P200 IEC200L4**	**F803_10.3 P200 BX200LA4**	438
147	1815	1.8	10.0	20000			**F703_10.0 P200 IEC200L4**	**F703_10.0 P200 BX200LA4**	435

37 kW

n_2 min-1	M_2 Nm	S	i	R_{n2} N	IE...		IE2*	IE3	
20.9	15710	0.9	70.8	47600			**F903_70.8 P225 IEC225S4**	**F903_70.8 P225 BX225SA4**	441
25.8	12728	1.1	57.3	47700			**F903_57.3 P225 IEC225S4**	**F903_57.3 P225 BX225SA4**	441
29.7	11079	1.3	49.9	47600			**F903_49.9 P225 IEC225S4**	**F903_49.9 P225 BX225SA4**	441
32	10227	1.4	46.1	47200			**F903_46.1 P225 IEC225S4**	**F903_46.1 P225 BX225SA4**	441
37	8993	1.6	40.5	46800			**F903_40.5 P225 IEC225S4**	**F903_40.5 P225 BX225SA4**	441
38	8659	0.9	39.0	28500			**F803_39.0 P225 IEC225S4**	**F803_39.0 P225 BX225SA4**	438
40	8301	1.6	37.4	46300			**F903_37.4 P225 IEC225S4**	**F903_37.4 P225 BX225SA4**	441
41	7993	1.0	36.0	28300			**F803_36.0 P225 IEC225S4**	**F803_36.0 P225 BX225SA4**	438
47	6939	1.2	31.3	28400			**F803_31.3 P225 IEC225S4**	**F803_31.3 P225 BX225SA4**	438
48	6882	1.9	31.0	45300			**F903_31.0 P225 IEC225S4**	**F903_31.0 P225 BX225SA4**	441
51	6405	1.2	28.8	28100			**F803_28.8 P225 IEC225S4**	**F803_28.8 P225 BX225SA4**	438
52	6353	1.9	28.6	44700			**F903_28.6 P225 IEC225S4**	**F903_28.6 P225 BX225SA4**	441
58	5637	2.1	25.4	43900			**F903_25.4 P225 IEC225S4**	**F903_25.4 P225 BX225SA4**	441
59	5601	1.1	25.2	27800			**F803_25.2 P225 IEC225S4**	**F803_25.2 P225 BX225SA4**	438
66	4947	2.4	22.3	43000			**F903_22.3 P225 IEC225S4**	**F903_22.3 P225 BX225SA4**	441
67	4891	1.1	22.0	27600			**F803_22.0 P225 IEC225S4**	**F803_22.0 P225 BX225SA4**	438
72	4567	2.5	20.6	42300			**F903_20.6 P225 IEC225S4**	**F903_20.6 P225 BX225SA4**	441
73	4515	1.1	20.3	27200			**F803_20.3 P225 IEC225S4**	**F803_20.3 P225 BX225SA4**	438
83	3975	2.8	17.9	41200			**F903_17.9 P225 IEC225S4**	**F903_17.9 P225 BX225SA4**	441
84	3908	1.7	17.6	26800			**F803_17.6 P225 IEC225S4**	**F803_17.6 P225 BX225SA4**	438
90	3669	2.8	16.5	40500			**F903_16.5 P225 IEC225S4**	**F903_16.5 P225 BX225SA4**	441
91	3607	1.7	16.2	26300			**F803_16.2 P225 IEC225S4**	**F803_16.2 P225 BX225SA4**	438
102	3226	3.1	14.5	39500			**F903_14.5 P225 IEC225S4**	**F903_14.5 P225 BX225SA4**	441
106	3104	2.2	14.0	25800			**F803_14.0 P225 IEC225S4**	**F803_14.0 P225 BX225SA4**	438
110	2978	3.1	13.4	38700			**F903_13.4 P225 IEC225S4**	**F903_13.4 P225 BX225SA4**	441
115	2865	2.2	12.9	25300			**F803_12.9 P225 IEC225S4**	**F803_12.9 P225 BX225SA4**	438
132	2487	2.4	11.2	24500			**F803_11.2 P225 IEC225S4**	**F803_11.2 P225 BX225SA4**	438
143	2296	2.4	10.3	24300			**F803_10.3 P225 IEC225S4**	**F803_10.3 P225 BX225SA4**	438

***电机额定功率大于22KW时，技术资料仅供参考，选型时必参考电机制造商提供的信息。**

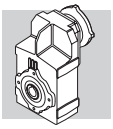

45 kW

n_2 min-1	M_2 Nm	S	i	R_{n2} N	IE...		IE2*	IEC IE3	
32	12438	1.1	46.1	43900			**F903_46.1 P225 IEC225M4**	**F903_46.1 P225 BX225SB4**	441
37	10937	1.3	40.5	43900			**F903_40.5 P225 IEC225M4**	**F903_40.5 P225 BX225SB4**	441
40	10096	1.3	37.4	43600			**F903_37.4 P225 IEC225M4**	**F903_37.4 P225 BX225SB4**	441
47	8439	0.9	31.3	26100			**F803_31.3 P225 IEC225M4**	**F803_31.3 P225 BX225SB4**	438
48	8370	1.6	31.0	43100			**F903_31.0 P225 IEC225M4**	**F903_31.0 P225 BX225SB4**	441
51	7790	1.0	28.8	26000			**F803_28.8 P225 IEC225M4**	**F803_28.8 P225 BX225SB4**	438
52	7726	1.6	28.6	42600			**F903_28.6 P225 IEC225M4**	**F903_28.6 P225 BX225SB4**	441
58	6855	1.8	25.4	42000			**F903_25.4 P225 IEC225M4**	**F903_25.4 P225 BX225SB4**	441
66	6017	2.0	22.3	41400			**F903_22.3 P225 IEC225M4**	**F903_22.3 P225 BX225SB4**	441
67	5948	1.1	22.0	26000			**F803_22.0 P225 IEC225M4**	**F803_22.0 P225 BX225SB4**	438
72	5554	2.0	20.6	40800			**F903_20.6 P225 IEC225M4**	**F903_20.6 P225 BX225SB4**	441
73	5491	1.1	20.3	25700			**F803_20.3 P225 IEC225M4**	**F803_20.3 P225 BX225SB4**	438
83	4834	2.3	17.9	39900			**F903_17.9 P225 IEC225M4**	**F903_17.9 P225 BX225SB4**	441
84	4753	1.4	17.6	25500			**F803_17.6 P225 IEC225M4**	**F803_17.6 P225 BX225SB4**	438
90	4463	2.3	16.5	39300			**F903_16.5 P225 IEC225M4**	**F903_16.5 P225 BX225SB4**	441
91	4387	1.4	16.2	25200			**F803_16.2 P225 IEC225M4**	**F803_16.2 P225 BX225SB4**	438
102	3924	2.5	14.5	38400			**F903_14.5 P225 IEC225M4**	**F903_14.5 P225 BX225SB4**	441
106	3775	1.8	14.0	24800			**F803_14.0 P225 IEC225M4**	**F803_14.0 P225 BX225SB4**	438
110	3622	2.6	13.4	37800			**F903_13.4 P225 IEC225M4**	**F903_13.4 P225 BX225SB4**	441
115	3484	1.8	12.9	24100			**F803_12.9 P225 IEC225M4**	**F803_12.9 P225 BX225SB4**	438
132	3025	1.5	11.2	24000			**F803_11.2 P225 IEC225M4**	**F803_11.2 P225 BX225SB4**	438
133	3003	2.9	11.1	36400			**F903_11.1 P225 IEC225M4**	**F903_11.1 P225 BX225SB4**	441
143	2792	2.0	10.3	23500			**F803_10.3 P225 IEC225M4**	**F803_10.3 P225 BX225SB4**	438

55 kW

n_2 min-1	M_2 Nm	S	i	R_{n2} N	IE...		IE2*	IEC IE3	
32	15202	0.9	46.1	39700			**F903_46.1 P250 IEC250M4**	**F903_46.1 P250 BX250MA4**	441
37	13367	1.0	40.5	40300			**F903_40.5 P250 IEC250M4**	**F903_40.5 P250 BX250MA4**	441
40	12339	1.1	37.4	40200			**F903_37.4 P250 IEC250M4**	**F903_37.4 P250 BX250MA4**	441
48	10230	1.3	31.0	40300			**F903_31.0 P250 IEC250M4**	**F903_31.0 P250 BX250MA4**	441
52	9443	1.3	28.6	40100			**F903_28.6 P250 IEC250M4**	**F903_28.6 P250 BX250MA4**	441
58	8379	1.4	25.4	39700			**F903_25.4 P250 IEC250M4**	**F903_25.4 P250 BX250MA4**	441
66	7354	1.6	22.3	39400			**F903_22.3 P250 IEC250M4**	**F903_22.3 P250 BX250MA4**	441
72	6788	1.7	20.6	38900			**F903_20.6 P250 IEC250M4**	**F903_20.6 P250 BX250MA4**	441
83	5909	1.9	17.9	38300			**F903_17.9 P250 IEC250M4**	**F903_17.9 P250 BX250MA4**	441
90	5454	1.9	16.5	37800			**F903_16.5 P250 IEC250M4**	**F903_16.5 P250 BX250MA4**	441
102	4796	2.1	14.5	37100			**F903_14.5 P250 IEC250M4**	**F903_14.5 P250 BX250MA4**	441
110	4427	2.1	13.4	36600			**F903_13.4 P250 IEC250M4**	**F903_13.4 P250 BX250MA4**	441
133	3671	2.4	11.1	35400			**F903_11.1 P250 IEC250M4**	**F903_11.1 P250 BX250MA4**	441
144	3388	2.4	10.3	34800			**F903_10.3 P250 IEC250M4**	**F903_10.3 P250 BX250MA4**	441

***电机额定功率大于22KW时，技术资料仅供参考，选型时必参考电机制造商提供的信息。**

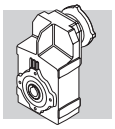

60 减速电机选型表

F 10 — 140 Nm

	i	n_1 = 2800 min^{-1}					n_1 = 1400 min^{-1}					
		n_2 min^{-1}	M_{n2} Nm	P_{n1} kW	R_{n1} N	R_{n2} N	n_2 min^{-1}	M_{n2} Nm	P_{n1} kW	R_{n1} N	R_{n2} N	
F 10 2_7.4	7.4	378	63	2.6	1000	1290	189	76	1.6	1290	1640	
F 10 2_8.6	8.6	326	67	2.4	980	1350	163	82	1.5	1260	1710	
F 10 2_9.8	9.8	287	73	2.3	980	1410	143	89	1.4	1250	1780	
F 10 2_11.5	11.5	243	78	2.1	950	1480	121	96	1.3	1220	1870	
F 10 2_13.0	13.0	215	85	2.0	940	1530	107	104	1.2	1210	1940	
F 10 2_14.6	14.6	191	94	2.0	1120	1590	96	119	1.3	1300	2000	
F 10 2_17.0	17.0	165	104	1.9	1090	1650	82	128	1.2	1300	2090	
F 10 2_19.3	19.3	145	108	1.7	1100	1730	72	136	1.1	1300	2180	
F 10 2_22.8	22.8	123	119	1.6	1080	1810	61	140	0.95	1300	2310	
F 10 2_25.8	25.8	109	123	1.5	1090	1890	54	140	0.84	1300	2430	
F 10 2_29.6	29.6	94	132	1.4	1060	1970	47	140	0.73	1300	2560	
F 10 2_33.0	33.0	85	137	1.3	1070	2040	42	140	0.65	1300	2670	407
F 10 2_35.3	35.3	79	140	1.2	1060	2090	40	140	0.61	1300	2740	
F 10 2_39.6	39.6	71	140	1.1	1080	2190	35	140	0.54	1300	2800	
F 10 2_44.7	44.7	63	140	0.97	1080	2290	31	140	0.48	1300	2800	
F 10 2_48.7	48.7	57	140	0.89	1090	2370	28.7	140	0.44	1300	2800	
F 10 2_56.7	56.7	49	140	0.76	1100	2520	24.7	140	0.38	1300	2800	
F 10 2_63.0	63.0	44	140	0.69	1110	2620	22.2	140	0.34	1300	2800	
F 10 2_71.1	71.1	39	140	0.61	1000	2750	19.7	140	0.30	1300	2800	
F 10 2_81.3	81.3	34	140	0.53	1110	2800	17.2	140	0.27	1300	2800	
F 10 2_91.5	91.5	31	140	0.47	1110	2800	15.3	140	0.24	1300	2800	
F 10 2_106.0	106.0	26.4	140	0.41	1120	2800	13.2	140	0.20	1300	2800	
F 10 2_127.1	127.1	22.0	140	0.34	1130	2800	11.0	140	0.17	1300	2800	

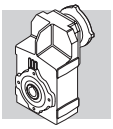

F 10 — 140 Nm

	i	n_1 = 900 min^{-1}					n_1 = 500 min^{-1}					
		n_2 min^{-1}	M_{n2} Nm	P_{n1} kW	R_{n1} N	R_{n2} N	n_2 min^{-1}	M_{n2} Nm	P_{n1} kW	R_{n1} N	R_{n2} N	
F 10 2_7.4	7.4	122	91	1.2	1300	1890	68	111	0.83	1300	2300	
F 10 2_8.6	8.6	105	94	1.1	1300	1970	58	112	0.72	1300	2430	
F 10 2_9.8	9.8	92	107	1.1	1300	2050	51	130	0.73	1300	2490	
F 10 2_11.5	11.5	78	110	0.95	1300	2180	43	131	0.63	1300	2660	
F 10 2_13.0	13.0	69	124	0.94	1300	2240	38	140	0.59	1300	2800	
F 10 2_14.6	14.6	61	138	0.93	1300	2320	34	140	0.53	1300	2800	
F 10 2_17.0	17.0	53	140	0.82	1300	2450	29.5	140	0.46	1300	2800	
F 10 2_19.3	19.3	47	140	0.72	1300	2580	25.9	140	0.40	1300	2800	
F 10 2_22.8	22.8	39	140	0.61	1300	2750	21.9	140	0.34	1300	2800	
F 10 2_25.8	25.8	35	140	0.54	1300	2800	19.4	140	0.30	1300	2800	
F 10 2_29.6	29.6	30	140	0.47	1300	2800	16.9	140	0.26	1300	2800	
F 10 2_33.0	33.0	27.3	140	0.42	1300	2800	15.2	140	0.23	1300	2800	407
F 10 2_35.3	35.3	25.5	140	0.39	1300	2800	14.1	140	0.22	1300	2800	
F 10 2_39.6	39.6	22.7	140	0.35	1300	2800	12.6	140	0.19	1300	2800	
F 10 2_44.7	44.7	20.1	140	0.31	1300	2800	11.2	140	0.17	1300	2800	
F 10 2_48.7	48.7	18.5	140	0.29	1300	2800	10.3	140	0.16	1300	2800	
F 10 2_56.7	56.7	15.9	140	0.24	1300	2800	8.8	140	0.14	1300	2800	
F 10 2_63.0	63.0	14.3	140	0.22	1300	2800	7.9	140	0.12	1300	2800	
F 10 2_71.1	71.1	12.7	140	0.20	1300	2800	7.0	140	0.11	1300	2800	
F 10 2_81.3	81.3	11.1	140	0.17	1300	2800	6.1	140	0.09	1300	2800	
F 10 2_91.5	91.5	9.8	140	0.15	1300	2800	5.5	140	0.08	1300	2800	
F 10 2_106.0	106.0	8.5	140	0.13	1300	2800	4.7	140	0.07	1300	2800	
F 10 2_127.1	127.1	7.1	140	0.11	1300	2800	3.9	140	0.06	1300	2800	

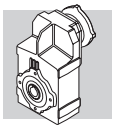

F 20 — 250 Nm

	i	n_1 = 2800 min^{-1}					n_1 = 1400 min^{-1}					
		n_2 min^{-1}	M_{n2} Nm	P_{n1} kW	R_{n1} N	R_{n2} N	n_2 min^{-1}	M_{n2} Nm	P_{n1} kW	R_{n1} N	R_{n2} N	
F 20 2_6.4	6.4	437	103	5.0	—	1370	218	130	3.1	—	1720	
F 20 2_7.8	7.8	357	115	4.5	—	1440	179	144	2.8	—	1820	
F 20 2_8.7	8.7	321	123	4.3	—	1490	160	155	2.7	—	1870	
F 20 2_10.0	10.0	279	131	4.0	—	1550	140	165	2.5	—	1950	
F 20 2_11.2	11.2	249	141	3.9	—	1590	125	177	2.4	—	2010	
F 20 2_14.8	14.8	189	166	3.5	760	1740	95	203	2.1	1010	2210	
F 20 2_18.1	18.1	155	175	3.0	750	1870	77	213	1.8	1020	2380	
F 20 2_20.2	20.2	139	182	2.8	810	1940	69	223	1.7	1070	2460	
F 20 2_23.1	23.1	121	190	2.5	770	2030	60	235	1.6	1000	2570	
F 20 2_25.9	25.9	108	196	2.3	830	2110	54	240	1.4	1100	2680	
F 20 2_30.4	30.4	92	205	2.1	780	2230	46	250	1.3	1050	2840	
F 20 2_33.1	33.1	85	210	2.0	800	2300	42	250	1.2	1120	2940	
F 20 2_37.9	37.9	74	220	1.8	740	2400	37	250	1.0	1130	3110	
F 20 2_41.8	41.8	67	225	1.7	780	2490	33	250	0.92	1220	3240	
F 20 2_44.8	44.8	62	235	1.6	690	2540	31	250	0.86	1200	3330	
F 20 2_50.7	50.7	55	238	1.4	780	2660	27.6	250	0.76	1320	3500	
F 20 2_56.7	56.7	49	250	1.4	730	2750	24.7	250	0.68	1360	3660	
F 20 2_61.9	61.9	45	250	1.2	750	2860	22.6	250	0.62	1370	3790	
F 20 2_69.1	69.1	40	250	1.1	760	2990	20.2	250	0.56	1370	3950	411
F 20 2_76.8	76.8	36	250	1.0	780	3130	18.2	250	0.50	1380	4000	
F 20 2_90.4	90.4	31	250	0.85	830	3340	15.5	250	0.43	1390	4000	
F 20 2_101.6	101.6	27.5	250	0.76	830	3500	13.8	250	0.38	1390	4000	
F 20 2_114.3	114.3	24.5	250	0.67	850	3670	12.2	250	0.34	1400	4000	
F 20 2_132.2	132.2	21.2	250	0.58	870	3890	10.6	250	0.29	1400	4000	
F 20 3_156.3	156.3	17.9	250	0.50	1170	4000	9.0	250	0.25	1300	4000	
F 20 3_172.6	172.6	16.2	250	0.46	1200	4000	8.1	250	0.23	1300	4000	
F 20 3_184.9	184.9	15.1	250	0.43	1210	4000	7.6	250	0.21	1300	4000	
F 20 3_209.3	209.3	13.4	250	0.38	1240	4000	6.7	250	0.19	1300	4000	
F 20 3_234.0	234.0	12.0	250	0.34	1270	4000	6.0	250	0.17	1300	4000	
F 20 3_255.3	255.3	11.0	250	0.31	1280	4000	5.5	250	0.15	1300	4000	
F 20 3_285.2	285.2	9.8	250	0.28	1300	4000	4.9	250	0.14	1300	4000	
F 20 3_316.9	316.9	8.8	250	0.25	1300	4000	4.4	250	0.12	1300	4000	
F 20 3_372.9	372.9	7.5	250	0.21	1300	4000	3.8	250	0.11	1300	4000	
F 20 3_419.3	419.3	6.7	250	0.19	1300	4000	3.3	250	0.09	1300	4000	
F 20 3_471.7	471.7	5.9	250	0.17	1300	4000	3.0	250	0.08	1300	4000	
F 20 3_545.3	545.3	5.1	250	0.14	1300	4000	2.6	250	0.07	1300	4000	

(—) 请联系我们的技术部门并告知径向负载信息 (转向, 力的方向, 位置)

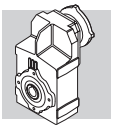

F 20 — 250 Nm

	i	n_1 = 900 min^{-1}					n_1 = 500 min^{-1}					
		n_2 min^{-1}	M_{n2} Nm	P_{n1} kW	R_{n1} N	R_{n2} N	n_2 min^{-1}	M_{n2} Nm	P_{n1} kW	R_{n1} N	R_{n2} N	
F 20 2_6.4	6.4	140	150	2.3	—	1990	218	183	4.4	—	2420	
F 20 2_7.8	7.8	115	167	2.1	—	2110	64	189	1.3	—	2610	
F 20 2_8.7	8.7	103	180	2.0	—	2170	57	219	1.4	—	2640	
F 20 2_10.0	10.0	90	191	1.9	—	2260	50	221	1.2	—	2790	
F 20 2_11.2	11.2	80	205	1.8	—	2330	45	250	1.2	—	2830	
F 20 2_14.8	14.8	61	232	1.6	1210	2570	34	250	0.93	1790	3230	
F 20 2_18.1	18.1	50	250	1.4	1150	2740	27.7	250	0.76	1910	3500	
F 20 2_20.2	20.2	45	250	1.2	1320	2870	24.8	250	0.68	1960	3650	
F 20 2_23.1	23.1	39	250	1.1	1350	3040	21.6	250	0.60	1970	3860	
F 20 2_25.9	25.9	35	250	0.96	1500	3190	19.3	250	0.53	2010	4000	
F 20 2_30.4	30.4	29.6	250	0.82	1530	3400	16.5	250	0.45	2020	4000	
F 20 2_33.1	33.1	27.2	250	0.75	1580	3520	15.1	250	0.42	2040	4000	
F 20 2_37.9	37.9	23.8	250	0.65	1590	3720	13.2	250	0.36	2040	4000	
F 20 2_41.8	41.8	21.5	250	0.59	1610	3870	12.0	250	0.33	2070	4000	
F 20 2_44.8	44.8	20.1	250	0.55	1610	3970	11.2	250	0.31	2060	4000	
F 20 2_50.7	50.7	17.7	250	0.49	1640	4000	9.9	250	0.27	2090	4000	
F 20 2_56.7	56.7	15.9	250	0.44	1650	4000	8.8	250	0.24	2110	4000	
F 20 2_61.9	61.9	14.5	250	0.40	1660	4000	8.1	250	0.22	2110	4000	
F 20 2_69.1	69.1	13.0	250	0.36	1660	4000	7.2	250	0.20	2110	4000	411
F 20 2_76.8	76.8	11.7	250	0.32	1670	4000	6.5	250	0.18	2120	4000	
F 20 2_90.4	90.4	10.0	250	0.27	1680	4000	5.5	250	0.15	2130	4000	
F 20 2_101.6	101.6	8.9	250	0.24	1680	4000	4.9	250	0.14	2130	4000	
F 20 2_114.3	114.3	7.9	250	0.22	1690	4000	4.4	250	0.12	2140	4000	
F 20 2_132.2	132.2	6.8	250	0.19	1690	4000	3.8	250	0.10	2150	4000	
F 20 3_156.3	156.3	5.8	250	0.16	1300	4000	3.2	250	0.09	1300	4000	
F 20 3_172.6	172.6	5.2	250	0.15	1300	4000	2.9	250	0.08	1300	4000	
F 20 3_184.9	184.9	4.9	250	0.14	1300	4000	2.7	250	0.08	1300	4000	
F 20 3_209.3	209.3	4.3	250	0.12	1300	4000	2.4	250	0.07	1300	4000	
F 20 3_234.0	234.0	3.8	250	0.11	1300	4000	2.1	250	0.06	1300	4000	
F 20 3_255.3	255.3	3.5	250	0.10	1300	4000	2.0	250	0.06	1300	4000	
F 20 3_285.2	285.2	3.2	250	0.09	1300	4000	1.8	250	0.05	1300	4000	
F 20 3_316.9	316.9	2.8	250	0.08	1300	4000	1.6	250	0.04	1300	4000	
F 20 3_372.9	372.9	2.4	250	0.07	1300	4000	1.3	250	0.04	1300	4000	
F 20 3_419.3	419.3	2.1	250	0.06	1300	4000	1.2	250	0.03	1300	4000	
F 20 3_471.7	471.7	1.9	250	0.05	1300	4000	1.1	250	0.03	1300	4000	
F 20 3_545.3	545.3	1.7	250	0.05	1300	4000	0.92	250	0.03	1300	4000	

(—) 请联系我们的技术部门并告知径向负载信息 (转向, 力的方向, 位置)

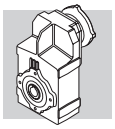

F 25 — 400 Nm

	i	n_1 = 2800 min^{-1}					n_1 = 1400 min^{-1}					
		n_2 min^{-1}	M_{n2} Nm	P_{n1} kW	R_{n1} N	R_{n2} N	n_2 min^{-1}	M_{n2} Nm	P_{n1} kW	R_{n1} N	R_{n2} N	
F 25 2_6.9	6.9	408	155	7.0	—	1840	204	195	4.4	—	2320	
F 25 2_8.4	8.4	334	170	6.3	—	1950	167	215	4.0	—	2450	
F 25 2_9.4	9.4	299	180	5.9	—	2010	150	225	3.7	—	2540	
F 25 2_10.6	10.6	264	240	7.0	—	1850	132	305	4.4	—	2320	
F 25 2_13.0	13.0	216	255	6.1	—	1990	108	320	3.8	—	2510	
F 25 2_14.5	14.5	194	260	5.5	—	2080	97	330	3.5	—	2610	
F 25 2_16.6	16.6	168	270	5.0	—	2190	84	340	3.2	—	2760	
F 25 2_18.6	18.6	150	280	4.6	—	2270	75	350	2.9	—	2870	
F 25 2_21.8	21.8	128	280	4.0	—	2460	64	355	2.5	250	3090	
F 25 2_23.8	23.8	118	285	3.7	250	2540	59	360	2.3	300	3200	
F 25 2_27.2	27.2	103	290	3.3	250	2690	51	365	2.1	320	3400	
F 25 2_30.0	30.0	93	295	3.0	310	2800	47	370	1.9	410	3540	
F 25 2_32.2	32.2	87	295	2.8	310	2900	44	370	1.8	410	3660	
F 25 2_36.4	36.4	77	295	2.5	460	3070	38	370	1.6	600	3880	
F 25 2_40.7	40.7	69	295	2.2	560	3230	34	370	1.4	720	4080	
F 25 2_44.4	44.4	63	295	2.0	720	3360	32	370	1.3	720	4250	
F 25 3_45.6	45.6	61	340	2.4	1440	3100	31	400	1.4	1830	4030	
F 25 3_50.8	50.8	55	350	2.2	1450	3230	27.6	400	1.2	1850	4250	
F 25 3_58.3	58.3	48	365	2.0	1450	3390	24.0	400	1.1	1860	4530	
F 25 3_65.3	65.3	43	375	1.8	1450	3530	21.4	400	0.97	1870	4780	
F 25 3_76.6	76.6	37	395	1.6	1450	3730	18.3	400	0.82	1880	5140	
F 25 3_83.4	83.4	34	400	1.5	1450	3860	16.8	400	0.76	1880	5330	
F 25 3_95.5	95.5	29.3	400	1.3	1460	4130	14.7	400	0.66	1890	5660	415
F 25 3_105.4	105.4	26.6	400	1.2	1470	4320	13.3	400	0.60	1890	5910	
F 25 3_113.0	113.0	24.8	400	1.1	1470	4470	12.4	400	0.56	1890	6090	
F 25 3_127.8	127.8	21.9	400	0.99	1480	4730	11.0	400	0.49	1900	6430	
F 25 3_143.0	143.0	19.6	400	0.88	1480	4980	9.8	400	0.44	1910	6500	
F 25 3_155.9	155.9	18.0	400	0.81	1480	5180	9.0	400	0.40	1910	6500	
F 25 3_174.2	174.2	16.1	400	0.72	1490	5440	8.0	400	0.36	1910	6500	
F 25 3_193.6	193.6	14.5	400	0.65	1490	5700	7.2	400	0.33	1910	6500	
F 25 3_227.8	227.8	12.3	400	0.55	1490	6120	6.1	400	0.28	1920	6500	
F 25 3_256.1	256.1	10.9	400	0.49	1490	6430	5.5	400	0.25	1920	6500	
F 25 3_288.1	288.1	9.7	400	0.44	1490	6500	4.9	400	0.22	1920	6500	
F 25 3_333.1	333.1	8.4	400	0.38	1500	6500	4.2	400	0.19	1930	6500	
F 25 4_393.9	393.9	7.1	400	0.33	1270	6500	3.6	400	0.17	1300	6500	
F 25 4_434.9	434.9	6.4	400	0.30	1290	6500	3.2	400	0.15	1300	6500	
F 25 4_466.0	466.0	6.0	400	0.28	1300	6500	3.0	400	0.14	1300	6500	
F 25 4_527.3	527.3	5.3	400	0.25	1300	6500	2.7	400	0.12	1300	6500	
F 25 4_589.7	589.7	4.7	400	0.22	1300	6500	2.4	400	0.11	1300	6500	
F 25 4_643.3	643.3	4.4	400	0.20	1300	6500	2.2	400	0.10	1300	6500	
F 25 4_718.7	718.7	3.9	400	0.18	1300	6500	1.9	400	0.09	1300	6500	
F 25 4_798.5	798.5	3.5	400	0.16	1300	6500	1.8	400	0.08	1300	6500	
F 25 4_939.8	939.8	3.0	400	0.14	1300	6500	1.5	400	0.07	1300	6500	
F 25 4_1057	1057	2.7	400	0.12	1300	6500	1.3	400	0.06	1300	6500	
F 25 4_1189	1189	2.4	400	0.11	1300	6500	1.2	400	0.05	1300	6500	
F 25 4_1374	1374	2.0	400	0.09	1300	6500	1.0	400	0.05	1300	6500	

(—) 请联系我们的技术部门并告知径向负载信息 (转向, 力的方向, 位置)

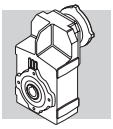

F 25 — 400 Nm

	i	n_1 = 900 min^{-1}					n_1 = 500 min^{-1}					
		n_2 min^{-1}	M_{n2} Nm	P_{n1} kW	R_{n1} N	R_{n2} N	n_2 min^{-1}	M_{n2} Nm	P_{n1} kW	R_{n1} N	R_{n2} N	
F 25 2_6.9	6.9	131	225	3.2	—	2690	73	255	2.0	370	3350	
F 25 2_8.4	8.4	107	250	3.0	—	2840	60	260	1.7	590	3630	
F 25 2_9.4	9.4	96	260	2.8	—	2940	53	265	1.6	820	3780	
F 25 2_10.6	10.6	85	355	3.3	—	2680	47	395	2.0	360	3420	
F 25 2_13.0	13.0	69	370	2.8	—	2910	39	400	1.7	620	3750	
F 25 2_14.5	14.5	62	380	2.6	—	3030	35	400	1.5	940	3950	
F 25 2_16.6	16.6	54	395	2.4	—	3190	30	400	1.3	1070	4210	
F 25 2_18.6	18.6	48	400	2.1	300	3350	26.9	400	1.2	1330	4440	
F 25 2_21.8	21.8	41	400	1.8	420	3630	22.9	400	1.0	1450	4770	
F 25 2_23.8	23.8	38	400	1.7	530	3780	21.0	400	0.93	1560	4950	
F 25 2_27.2	27.2	33	400	1.5	610	4030	18.4	400	0.81	1640	5260	
F 25 2_30.0	30.0	30	400	1.3	760	4220	16.6	400	0.73	1790	5490	
F 25 2_32.2	32.2	28.0	400	1.2	760	4360	15.5	400	0.69	1790	5660	
F 25 2_36.4	36.4	24.7	400	1.1	970	4610	13.7	400	0.61	2000	5970	
F 25 2_40.7	40.7	22.1	375	0.91	1330	4950	12.3	375	0.51	2000	6360	
F 25 2_44.4	44.4	20.3	385	0.86	1230	5100	11.3	385	0.48	2000	6500	
F 25 3_45.6	45.6	19.8	400	0.89	2160	4960	11.0	400	0.49	2200	6420	
F 25 3_50.8	50.8	17.7	400	0.80	2180	5210	9.8	400	0.44	2200	6500	
F 25 3_58.3	58.3	15.4	400	0.69	2190	5540	8.6	400	0.39	2200	6500	
F 25 3_65.3	65.3	13.8	400	0.62	2200	5820	7.7	400	0.34	2200	6500	
F 25 3_76.6	76.6	11.8	400	0.53	2200	6240	6.5	400	0.29	2200	6500	
F 25 3_83.4	83.4	10.8	400	0.49	2200	6470	6.0	400	0.27	2200	6500	
F 25 3_95.5	95.5	9.4	400	0.42	2200	6500	5.2	400	0.24	2200	6500	
F 25 3_105.4	105.4	8.5	400	0.38	2200	6500	4.7	400	0.21	2200	6500	415
F 25 3_113.0	113.0	8.0	400	0.36	2200	6500	4.4	400	0.20	2200	6500	
F 25 3_127.8	127.8	7.0	400	0.32	2200	6500	3.9	400	0.18	2200	6500	
F 25 3_143.0	143.0	6.3	400	0.28	2200	6500	3.5	400	0.16	2200	6500	
F 25 3_155.9	155.9	5.8	400	0.26	2200	6500	3.2	400	0.14	2200	6500	
F 25 3_174.2	174.2	5.2	400	0.23	2200	6500	2.9	400	0.13	2200	6500	
F 25 3_193.6	193.6	4.6	400	0.21	2200	6500	2.6	400	0.12	2200	6500	
F 25 3_227.8	227.8	4.0	400	0.18	2200	6500	2.2	400	0.10	2200	6500	
F 25 3_256.1	256.1	3.5	400	0.16	2200	6500	2.0	400	0.09	2200	6500	
F 25 3_288.1	288.1	3.1	400	0.14	2200	6500	1.7	400	0.08	2200	6500	
F 25 3_333.1	333.1	2.7	400	0.12	2200	6500	1.5	400	0.07	2200	6500	
F 25 4_393.9	393.9	2.3	400	0.11	1300	6500	1.3	400	0.06	1300	6500	
F 25 4_434.9	434.9	2.1	400	0.10	1300	6500	1.1	400	0.05	1300	6500	
F 25 4_466.0	466.0	1.9	400	0.09	1300	6500	1.1	400	0.05	1300	6500	
F 25 4_527.3	527.3	1.7	400	0.08	1300	6500	0.95	400	0.04	1300	6500	
F 25 4_589.7	589.7	1.5	400	0.07	1300	6500	0.85	400	0.04	1300	6500	
F 25 4_643.3	643.3	1.4	400	0.07	1300	6500	0.78	400	0.04	1300	6500	
F 25 4_718.7	718.7	1.3	400	0.06	1300	6500	0.70	400	0.03	1300	6500	
F 25 4_798.5	798.5	1.1	400	0.05	1300	6500	0.63	400	0.03	1300	6500	
F 25 4_939.8	939.8	0.96	400	0.04	1300	6500	0.53	400	0.02	1300	6500	
F 25 4_1057	1057	0.85	400	0.04	1300	6500	0.47	400	0.02	1300	6500	
F 25 4_1189	1189	0.76	400	0.04	1300	6500	0.42	400	0.02	1300	6500	
F 25 4_1374	1374	0.65	400	0.03	1300	6500	0.36	400	0.02	1300	6500	

(—) 请联系我们的技术部门并告知径向负载信息 (转向, 力的方向, 位置)

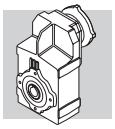

F 31 — 600 Nm

	i	n_1 = 2800 min^{-1}					n_1 = 1400 min^{-1}					
		n_2 min^{-1}	M_{n2} Nm	P_{n1} kW	R_{n1} N	R_{n2} N	n_2 min^{-1}	M_{n2} Nm	P_{n1} kW	R_{n1} N	R_{n2} N	
F 31 2_6.9	6.9	403	295	13.1	—	2710	201	360	8.0	—	3460	419
F 31 2_8.2	8.2	340	310	11.6	—	2880	170	375	7.0	—	3690	
F 31 2_9.0	9.0	311	310	10.6	—	3000	155	385	6.6	390	3810	
F 31 2_10.7	10.7	261	450	12.9	—	2790	130	525	7.5	500	3670	
F 31 2_12.7	12.7	220	475	11.5	—	2950	110	555	6.7	490	3880	
F 31 2_13.9	13.9	201	475	10.5	290	3100	100	570	6.3	650	4010	
F 31 2_16.8	16.8	167	475	8.7	510	3410	83	595	5.5	680	4310	
F 31 2_18.5	18.5	151	475	7.9	730	3580	76	600	5.0	910	4510	
F 31 2_21.1	21.1	133	475	6.9	830	3830	66	600	4.4	1030	4820	
F 31 2_23.4	23.4	120	475	6.3	1020	4020	60	600	4.0	1270	5060	
F 31 2_27.3	27.3	103	475	5.4	1100	4330	51	600	3.4	1380	5450	
F 31 2_30.1	30.1	93	475	4.9	1270	4540	46	600	3.1	1590	5710	
F 31 2_34.4	34.4	81	475	4.3	1330	4820	41	600	2.7	1660	6070	
F 31 2_37.7	37.7	74	475	3.9	1430	5030	37	600	2.5	1800	6330	
F 31 2_40.4	40.4	69	475	3.6	1440	5190	35	600	2.3	1800	6500	
F 31 2_44.6	44.6	63	475	3.3	1540	5430	31	600	2.1	1930	6500	
F 31 3_47.5	47.5	59	475	3.1	2110	5490	29.4	580	1.9	2200	6500	
F 31 3_52.1	52.1	54	485	2.9	2120	5680	26.9	600	1.8	2200	6500	
F 31 3_62.8	62.8	45	515	2.6	2120	6040	22.3	600	1.5	2200	6500	
F 31 3_69.1	69.1	41	530	2.4	2130	6250	20.3	600	1.4	2200	6500	
F 31 3_78.9	78.9	36	550	2.2	2120	6500	17.8	600	1.2	2200	6500	
F 31 3_87.4	87.4	32	570	2.1	2130	6500	16.0	600	1.1	2200	6500	
F 31 3_101.9	101.9	27.5	595	1.8	2130	6500	13.7	600	0.93	2200	6500	
F 31 3_112.5	112.5	24.9	600	1.7	2130	6500	12.4	600	0.84	2200	6500	
F 31 3_128.4	128.4	21.8	600	1.5	2140	6500	10.9	600	0.74	2200	6500	
F 31 3_140.7	140.7	19.9	600	1.3	2140	6500	9.9	600	0.67	2200	6500	
F 31 3_150.8	150.8	18.6	600	1.3	2140	6500	9.3	600	0.63	2200	6500	
F 31 3_166.8	166.8	16.8	600	1.1	2150	6500	8.4	600	0.57	2200	6500	
F 31 3_185.4	185.4	15.1	600	1.0	2160	6500	7.5	600	0.51	2200	6500	
F 31 3_202.3	202.3	13.8	600	0.94	2160	6500	6.9	600	0.47	2200	6500	
F 31 3_228.2	228.2	12.3	600	0.83	2160	6500	6.1	600	0.41	2200	6500	
F 31 3_253.6	253.6	11.0	600	0.75	2160	6500	5.5	600	0.37	2200	6500	
F 31 3_293.8	293.8	9.5	600	0.64	2170	6500	4.8	600	0.32	2200	6500	
F 31 3_332.8	332.8	8.4	600	0.57	2170	6500	4.2	600	0.28	2200	6500	
F 31 3_374.4	374.4	7.5	600	0.51	2170	6500	3.7	600	0.25	2200	6500	
F 31 4_418.9	418.9	6.7	600	0.47	1230	6500	3.3	600	0.23	1300	6500	
F 31 4_462.6	462.6	6.1	600	0.42	1250	6500	3.0	600	0.21	1300	6500	
F 31 4_527.8	527.8	5.3	600	0.37	1270	6500	2.7	600	0.19	1300	6500	
F 31 4_578.6	578.6	4.8	600	0.34	1290	6500	2.4	600	0.17	1300	6500	
F 31 4_619.9	619.9	4.5	600	0.32	1300	6500	2.3	600	0.16	1300	6500	
F 31 4_685.6	685.6	4.1	600	0.29	1300	6500	2.0	600	0.14	1300	6500	
F 31 4_762.3	762.3	3.7	600	0.26	1300	6500	1.8	600	0.13	1300	6500	
F 31 4_831.6	831.6	3.4	600	0.24	1300	6500	1.7	600	0.12	1300	6500	
F 31 4_938.2	938.2	3.0	600	0.21	1300	6500	1.5	600	0.10	1300	6500	
F 31 4_1042	1042	2.7	600	0.19	1300	6500	1.3	600	0.09	1300	6500	
F 31 4_1208	1208	2.3	600	0.16	1300	6500	1.2	600	0.08	1300	6500	
F 31 4_1368	1368	2.0	600	0.14	1300	6500	1.0	600	0.07	1300	6500	
F 31 4_1539	1539	1.8	600	0.13	1300	6500	0.91	600	0.06	1300	6500	

(—) 请联系我们的技术部门并告知径向负载信息 (转向, 力的方向, 位置)

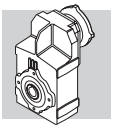

F 31 — 600 Nm

	i	n_1 = 900 min^{-1}					n_1 = 500 min^{-1}					
		n_2 min^{-1}	M_{n2} Nm	P_{n1} kW	R_{n1} N	R_{n2} N	n_2 min^{-1}	M_{n2} Nm	P_{n1} kW	R_{n1} N	R_{n2} N	
F 31 2_6.9	6.9	130	390	5.6	640	4120	72	390	3.1	2200	5350	
F 31 2_8.2	8.2	109	390	4.7	990	4450	61	390	2.6	2200	5760	
F 31 2_9.0	9.0	100	390	4.3	1320	4640	55	390	2.4	2200	5980	
F 31 2_10.7	10.7	84	600	5.5	670	4280	47	600	3.1	2200	5710	
F 31 2_12.7	12.7	71	600	4.7	1020	4670	39	600	2.6	2200	6170	
F 31 2_13.9	13.9	65	600	4.3	1350	4880	36	600	2.4	2200	6440	
F 31 2_16.8	16.8	54	600	3.5	1640	5340	29.8	600	2.0	2200	6500	
F 31 2_18.5	18.5	49	600	3.2	1915	5580	27.0	600	1.8	2200	6500	
F 31 2_21.1	21.1	43	600	2.8	2040	5950	23.7	600	1.6	2200	6500	
F 31 2_23.4	23.4	38	600	2.5	2200	6230	21.4	600	1.4	2200	6500	
F 31 2_27.3	27.3	33	600	2.2	2200	6500	18.3	600	1.2	2200	6500	
F 31 2_30.1	30.1	29.9	600	2.0	2200	6500	16.6	600	1.1	2200	6500	
F 31 2_34.4	34.4	26.2	600	1.7	2200	6500	14.6	600	0.96	2200	6500	
F 31 2_37.7	37.7	23.9	600	1.6	2200	6500	13.3	600	0.88	2200	6500	
F 31 2_40.4	40.4	22.3	600	1.5	2200	6500	12.4	600	0.82	2200	6500	
F 31 2_44.6	44.6	20.2	600	1.3	2200	6500	11.2	600	0.74	2200	6500	
F 31 3_47.5	47.5	18.9	600	1.3	2200	6500	10.5	600	0.71	2200	6500	
F 31 3_52.1	52.1	17.3	600	1.2	2200	6500	9.6	600	0.65	2200	6500	
F 31 3_62.8	62.8	14.3	600	0.97	2200	6500	8.0	600	0.54	2200	6500	
F 31 3_69.1	69.1	13.0	600	0.88	2200	6500	7.2	600	0.49	2200	6500	
F 31 3_78.9	78.9	11.4	600	0.77	2200	6500	6.3	600	0.43	2200	6500	
F 31 3_87.4	87.4	10.3	600	0.70	2200	6500	5.7	600	0.39	2200	6500	
F 31 3_101.9	101.9	8.8	600	0.60	2200	6500	4.9	600	0.33	2200	6500	
F 31 3_112.5	112.5	8.0	600	0.54	2200	6500	4.4	600	0.30	2200	6500	419
F 31 3_128.4	128.4	7.0	600	0.47	2200	6500	3.9	600	0.26	2200	6500	
F 31 3_140.7	140.7	6.4	600	0.43	2200	6500	3.6	600	0.24	2200	6500	
F 31 3_150.8	150.8	6.0	600	0.40	2200	6500	3.3	600	0.22	2200	6500	
F 31 3_166.8	166.8	5.4	600	0.36	2200	6500	3.0	600	0.20	2200	6500	
F 31 3_185.4	185.4	4.9	600	0.33	2200	6500	2.7	600	0.18	2200	6500	
F 31 3_202.3	202.3	4.4	600	0.30	2200	6500	2.5	600	0.17	2200	6500	
F 31 3_228.2	228.2	3.9	600	0.27	2200	6500	2.2	600	0.15	2200	6500	
F 31 3_253.6	253.6	3.5	600	0.24	2200	6500	2.0	600	0.13	2200	6500	
F 31 3_293.8	293.8	3.1	600	0.21	2200	6500	1.7	600	0.11	2200	6500	
F 31 3_332.8	332.8	2.7	600	0.18	2200	6500	1.5	600	0.10	2200	6500	
F 31 3_374.4	374.4	2.4	600	0.16	2200	6500	1.3	600	0.09	2200	6500	
F 31 4_418.9	418.9	2.1	600	0.15	1300	6500	1.2	600	0.08	1300	6500	
F 31 4_462.6	462.6	1.9	600	0.14	1300	6500	1.1	600	0.08	1300	6500	
F 31 4_527.8	527.8	1.7	600	0.12	1300	6500	0.95	600	0.07	1300	6500	
F 31 4_578.6	578.6	1.6	600	0.11	1300	6500	0.86	600	0.06	1300	6500	
F 31 4_619.9	619.9	1.5	600	0.10	1300	6500	0.81	600	0.06	1300	6500	
F 31 4_685.6	685.6	1.3	600	0.09	1300	6500	0.73	600	0.05	1300	6500	
F 31 4_762.3	762.3	1.2	600	0.08	1300	6500	0.66	600	0.05	1300	6500	
F 31 4_831.6	831.6	1.1	600	0.08	1300	6500	0.60	600	0.04	1300	6500	
F 31 4_938.2	938.2	0.96	600	0.07	1300	6500	0.53	600	0.04	1300	6500	
F 31 4_1042	1042	0.86	600	0.06	1300	6500	0.48	600	0.03	1300	6500	
F 31 4_1208	1208	0.75	600	0.05	1300	6500	0.41	600	0.03	1300	6500	
F 31 4_1368	1368	0.66	600	0.05	1300	6500	0.37	600	0.03	1300	6500	
F 31 4_1539	1539	0.58	600	0.04	1300	6500	0.32	600	0.02	1300	6500	

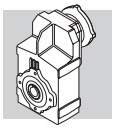

F 41 — 1100 Nm

	i	n_1 = 2800 min^{-1}					n_1 = 1400 min^{-1}					
		n_2 min^{-1}	M_{n2} Nm	P_{n1} kW	R_{n1} N	R_{n2} N	n_2 min^{-1}	M_{n2} Nm	P_{n1} kW	R_{n1} N	R_{n2} N	
F 41 2_6.7	6.7	416	460	21	—	3410	208	580	13.3	—	4290	
F 41 2_9.1	9.1	306	515	17.4	—	3750	153	650	11.0	—	4730	
F 41 2_10.8	10.8	260	715	21	—	3310	130	900	12.9	—	4170	
F 41 2_14.6	14.6	191	805	17.0	—	3620	96	1015	10.7	—	4560	
F 41 2_17.1	17.1	164	835	15.1	—	3860	82	1055	9.5	—	4850	
F 41 2_18.9	18.9	148	860	14.0	410	4000	74	1085	8.9	500	5030	
F 41 2_24.1	24.1	116	875	11.2	650	4540	58	1100	7.0	840	5730	
F 41 2_30.1	30.1	93	875	9.0	980	5130	46	1100	5.6	1260	6470	
F 41 2_38.2	38.2	73	875	7.1	1260	5810	37	1100	4.4	1600	7330	
F 41 2_47.9	47.9	58	850	5.5	1680	6600	29.2	1070	3.4	2120	8320	
F 41 3_51.5	51.5	54	880	5.4	3030	6750	27.2	1085	3.3	3500	8500	
F 41 3_60.2	60.2	46	930	4.9	3030	7100	23.2	1100	2.9	3500	8500	
F 41 3_66.5	66.5	42	980	4.6	3030	7280	21.1	1100	2.6	3500	8500	
F 41 3_84.9	84.9	33	1065	4.0	3030	7890	16.5	1100	2.0	3500	8500	
F 41 3_106.0	106.0	26.4	1100	3.3	3040	8500	13.2	1100	1.6	3500	8500	
F 41 3_134.4	134.4	20.8	1100	2.6	3050	8500	10.4	1100	1.3	3500	8500	
F 41 3_168.7	168.7	16.6	1100	2.1	3070	8500	8.3	1100	1.0	3500	8500	
F 41 3_180.7	180.7	15.5	1100	1.9	3070	8500	7.7	1100	0.96	3500	8500	423
F 41 3_198.9	198.9	14.1	1100	1.7	3080	8500	7.0	1100	0.87	3500	8500	
F 41 3_220.1	220.1	12.7	1100	1.6	3090	8500	6.4	1100	0.79	3500	8500	
F 41 3_240.1	240.1	11.7	1100	1.4	3090	8500	5.8	1100	0.72	3500	8500	
F 41 3_266.9	266.9	10.5	1100	1.3	3090	8500	5.2	1100	0.65	3500	8500	
F 41 3_296.6	296.6	9.4	1100	1.2	3090	8500	4.7	1100	0.58	3500	8500	
F 41 3_344.8	344.8	8.1	1100	1.0	3100	8500	4.1	1100	0.50	3500	8500	
F 41 4_433.7	433.7	6.5	1100	0.83	1480	8500	3.2	1100	0.41	1910	8500	
F 41 4_549.8	549.8	5.1	1100	0.65	1520	8500	2.5	1100	0.33	1940	8500	
F 41 4_690.1	690.1	4.1	1100	0.52	1540	8500	2.0	1100	0.26	1970	8500	
F 41 4_739.4	739.4	3.8	1100	0.48	1550	8500	1.9	1100	0.24	1980	8500	
F 41 4_813.8	813.8	3.4	1100	0.44	1560	8500	1.7	1100	0.22	1990	8500	
F 41 4_900.5	900.5	3.1	1100	0.40	1570	8500	1.6	1100	0.20	2000	8500	
F 41 4_982.4	982.4	2.9	1100	0.36	1570	8500	1.4	1100	0.18	2000	8500	
F 41 4_1092	1092	2.6	1100	0.33	1580	8500	1.3	1100	0.16	2010	8500	
F 41 4_1213	1213	2.3	1100	0.30	1590	8500	1.2	1100	0.15	2020	8500	
F 41 4_1411	1411	2.0	1100	0.25	1600	8500	1.0	1100	0.13	2020	8500	

(—) 请联系我们的技术部门并告知径向负载信息 (转向, 力的方向, 位置)

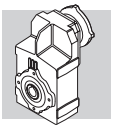

F 41 — 1100 Nm

	i	n_1 = 900 min^{-1}					n_1 = 500 min^{-1}					
		n_2 min^{-1}	M_{n2} Nm	P_{n1} kW	R_{n1} N	R_{n2} N	n_2 min^{-1}	M_{n2} Nm	P_{n1} kW	R_{n1} N	R_{n2} N	
F 41 2_6.7	6.7	134	670	9.9	—	4980	74	700	5.7	1760	6450	
F 41 2_9.1	9.1	99	700	7.6	680	5660	55	700	4.2	2850	7410	
F 41 2_10.8	10.8	84	1025	9.4	480	4900	46	1100	5.6	1950	6480	
F 41 2_14.6	14.6	62	1100	7.5	860	5550	34	1100	4.1	3030	7590	
F 41 2_17.1	17.1	53	1100	6.4	1230	6060	29.2	1100	3.5	3400	8210	
F 41 2_18.9	18.9	48	1100	5.8	1760	6390	26.5	1100	3.2	3500	8500	
F 41 2_24.1	24.1	37	1100	4.5	2210	7260	20.7	1100	2.5	3500	8500	
F 41 2_30.1	30.1	29.9	1100	3.6	2630	8120	16.6	1100	2.0	3500	8500	
F 41 2_38.2	38.2	23.6	1100	2.9	2970	8500	13.1	1100	1.6	3500	8500	
F 41 2_47.9	47.9	18.8	1070	2.2	3490	8500	10.4	1070	1.2	3500	8500	
F 41 3_51.5	51.5	17.5	1100	2.2	3500	8500	9.7	1100	1.2	3500	8500	
F 41 3_60.2	60.2	14.9	1100	1.9	3500	8500	8.3	1100	1.0	3500	8500	
F 41 3_66.5	66.5	13.5	1100	1.7	3500	8500	7.5	1100	0.93	3500	8500	
F 41 3_84.9	84.9	10.6	1100	1.3	3500	8500	5.9	1100	0.73	3500	8500	
F 41 3_106.0	106.0	8.5	1100	1.1	3500	8500	4.7	1100	0.58	3500	8500	
F 41 3_134.4	134.4	6.7	1100	0.83	3500	8500	3.7	1100	0.46	3500	8500	
F 41 3_168.7	168.7	5.3	1100	0.66	3500	8500	3.0	1100	0.37	3500	8500	
F 41 3_180.7	180.7	5.0	1100	0.62	3500	8500	2.8	1100	0.34	3500	8500	423
F 41 3_198.9	198.9	4.5	1100	0.56	3500	8500	2.5	1100	0.31	3500	8500	
F 41 3_220.1	220.1	4.1	1100	0.51	3500	8500	2.3	1100	0.28	3500	8500	
F 41 3_240.1	240.1	3.7	1100	0.46	3500	8500	2.1	1100	0.26	3500	8500	
F 41 3_266.9	266.9	3.4	1100	0.42	3500	8500	1.9	1100	0.23	3500	8500	
F 41 3_296.6	296.6	3.0	1100	0.38	3500	8500	1.7	1100	0.21	3500	8500	
F 41 3_344.8	344.8	2.6	1100	0.32	3500	8500	1.5	1100	0.18	3500	8500	
F 41 4_433.7	433.7	2.1	1100	0.27	2200	8500	1.2	1100	0.15	2200	8500	
F 41 4_549.8	549.8	1.6	1100	0.21	2200	8500	0.91	1100	0.12	2200	8500	
F 41 4_690.1	690.1	1.3	1100	0.17	2200	8500	0.72	1100	0.09	2200	8500	
F 41 4_739.4	739.4	1.2	1100	0.16	2200	8500	0.68	1100	0.09	2200	8500	
F 41 4_813.8	813.8	1.1	1100	0.14	2200	8500	0.61	1100	0.08	2200	8500	
F 41 4_900.5	900.5	1.0	1100	0.13	2200	8500	0.56	1100	0.07	2200	8500	
F 41 4_982.4	982.4	0.92	1100	0.12	2200	8500	0.51	1100	0.07	2200	8500	
F 41 4_1092	1092	0.82	1100	0.11	2200	8500	0.46	1100	0.06	2200	8500	
F 41 4_1213	1213	0.74	1100	0.09	2200	8500	0.41	1100	0.05	2200	8500	
F 41 4_1411	1411	0.64	1100	0.08	2200	8500	0.35	1100	0.05	2200	8500	

(—) 请联系我们的技术部门并告知径向负载信息 (转向, 力的方向, 位置)

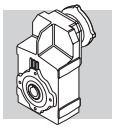

F 51 — 1800 Nm

	i	n_1 = 2800 min^{-1}					n_1 = 1400 min^{-1}					
		n_2 min^{-1}	M_{n2} Nm	P_{n1} kW	R_{n1} N	R_{n2} N	n_2 min^{-1}	M_{n2} Nm	P_{n1} kW	R_{n1} N	R_{n2} N	
F 51 2_7.2	7.2	389	775	33	990	4170	195	975	21	1440	5260	
F 51 2_9.1	9.1	309	875	30	890	4400	155	1100	18.8	1320	5550	
F 51 2_11.1	11.1	252	1055	29	1460	4530	126	1330	18.5	2010	5700	
F 51 2_14.0	14.0	200	1125	25	1580	4920	100	1420	15.7	2150	6200	
F 51 2_18.8	18.8	149	1225	20	1660	5480	74	1545	12.7	2240	6900	
F 51 2_23.8	23.8	118	1310	17.0	1710	5960	59	1650	10.7	2290	7520	
F 51 2_30.0	30.0	93	1350	13.9	1760	6610	47	1700	8.7	2330	8340	
F 51 2_37.1	37.1	75	1350	11.2	1910	7350	38	1700	7.1	2410	9260	
F 51 3_48.9	48.9	57	1505	9.7	2600	7800	28.6	1800	5.8	3310	10100	
F 51 3_65.8	65.8	43	1650	7.9	2610	8640	21.3	1800	4.3	3380	11600	
F 51 3_83.2	83.2	34	1770	6.7	2630	9380	16.8	1800	3.4	3440	12000	
F 51 3_105.1	105.1	26.6	1800	5.4	2650	10400	13.3	1800	2.7	3460	12000	
F 51 3_129.9	129.9	21.6	1800	4.4	2670	11600	10.8	1800	2.2	3490	12000	
F 51 3_165.6	165.6	16.9	1800	3.4	2700	12000	8.5	1800	1.7	3500	12000	
F 51 3_202.4	202.4	13.8	1800	2.8	2710	12000	6.9	1800	1.4	3500	12000	
F 51 3_216.9	216.9	12.9	1800	2.6	2710	12000	6.5	1800	1.3	3500	12000	427
F 51 3_239.8	239.8	11.7	1800	2.4	2730	12000	5.8	1800	1.2	3500	12000	
F 51 3_262.1	262.1	10.7	1800	2.2	2730	12000	5.3	1800	1.1	3500	12000	
F 51 3_285.9	285.9	9.8	1800	2.0	2730	12000	4.9	1800	0.99	3500	12000	
F 51 3_317.3	317.3	8.8	1800	1.8	2740	12000	4.4	1800	0.89	3500	12000	
F 51 3_352.5	352.5	7.9	1800	1.6	2740	12000	4.0	1800	0.80	3500	12000	
F 51 4_429.1	429.1	6.5	1800	1.4	1930	12000	3.3	1800	0.68	2200	12000	
F 51 4_530.5	530.5	5.3	1800	1.1	1970	12000	2.6	1800	0.55	2200	12000	
F 51 4_676.3	676.3	4.1	1800	0.87	2020	12000	2.1	1800	0.43	2200	12000	
F 51 4_826.4	826.4	3.4	1800	0.71	2040	12000	1.7	1800	0.35	2200	12000	
F 51 4_885.5	885.5	3.2	1800	0.66	2050	12000	1.6	1800	0.33	2200	12000	
F 51 4_979.4	979.4	2.9	1800	0.60	2060	12000	1.4	1800	0.30	2200	12000	
F 51 4_1070	1070	2.6	1800	0.55	2070	12000	1.3	1800	0.27	2200	12000	
F 51 4_1168	1168	2.4	1800	0.50	2080	12000	1.2	1800	0.25	2200	12000	
F 51 4_1296	1296	2.2	1800	0.45	2090	12000	1.1	1800	0.23	2200	12000	
F 51 4_1439	1439	1.9	1800	0.41	2100	12000	1.0	1800	0.20	2200	12000	

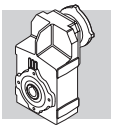

F 51 — 1800 Nm

	i	n_1 = 900 min^{-1}					n_1 = 500 min^{-1}					
		n_2 min^{-1}	M_{n2} Nm	P_{n1} kW	R_{n1} N	R_{n2} N	n_2 min^{-1}	M_{n2} Nm	P_{n1} kW	R_{n1} N	R_{n2} N	
F 51 2_7.2	7.2	125	1100	15.2	1940	6170	70	1100	8.4	3190	8140	
F 51 2_9.1	9.1	99	1100	12.1	2450	6900	55	1100	6.7	3440	9030	
F 51 2_11.1	11.1	81	1520	13.6	2450	6660	45	1700	8.4	3190	8480	
F 51 2_14.0	14.0	64	1620	11.5	2550	7250	36	1700	6.7	3440	9500	
F 51 2_18.8	18.8	48	1700	9.0	2690	8230	26.6	1700	5.0	3500	10900	
F 51 2_23.8	23.8	38	1700	7.1	2870	9250	21.0	1700	3.9	3500	12000	
F 51 2_30.0	30.0	30	1700	5.6	2960	10300	16.6	1700	3.1	3500	12000	
F 51 2_37.1	37.1	24.2	1700	4.5	3040	11400	13.5	1700	2.5	3500	12000	
F 51 3_48.9	48.9	18.4	1800	3.7	3500	12000	10.2	1800	2.1	3500	12000	
F 51 3_65.8	65.8	13.7	1800	2.8	3500	12000	7.6	1800	1.5	3500	12000	
F 51 3_83.2	83.2	10.8	1800	2.2	3500	12000	6.0	1800	1.2	3500	12000	
F 51 3_105.1	105.1	8.6	1800	1.7	3500	12000	4.8	1800	0.96	3500	12000	
F 51 3_129.9	129.9	6.9	1800	1.4	3500	12000	3.8	1800	0.78	3500	12000	
F 51 3_165.6	165.6	5.4	1800	1.1	3500	12000	3.0	1800	0.61	3500	12000	
F 51 3_202.4	202.4	4.4	1800	0.90	3500	12000	2.5	1800	0.50	3500	12000	
F 51 3_216.9	216.9	4.2	1800	0.84	3500	12000	2.3	1800	0.47	3500	12000	427
F 51 3_239.8	239.8	3.8	1800	0.76	3500	12000	2.1	1800	0.42	3500	12000	
F 51 3_262.1	262.1	3.4	1800	0.70	3500	12000	1.9	1800	0.39	3500	12000	
F 51 3_285.9	285.9	3.1	1800	0.64	3500	12000	1.7	1800	0.35	3500	12000	
F 51 3_317.3	317.3	2.8	1800	0.57	3500	12000	1.6	1800	0.32	3500	12000	
F 51 3_352.5	352.5	2.6	1800	0.52	3500	12000	1.4	1800	0.29	3500	12000	
F 51 4_429.1	429.1	2.1	1800	0.44	2200	12000	1.2	1800	0.24	2200	12000	
F 51 4_530.5	530.5	1.7	1800	0.36	2200	12000	0.94	1800	0.20	2200	12000	
F 51 4_676.3	676.3	1.3	1800	0.28	2200	12000	0.74	1800	0.15	2200	12000	
F 51 4_826.4	826.4	1.1	1800	0.23	2200	12000	0.61	1800	0.13	2200	12000	
F 51 4_885.5	885.5	1.0	1800	0.21	2200	12000	0.56	1800	0.12	2200	12000	
F 51 4_979.4	979.4	0.92	1800	0.19	2200	12000	0.51	1800	0.11	2200	12000	
F 51 4_1070	1070	0.84	1800	0.18	2200	12000	0.47	1800	0.10	2200	12000	
F 51 4_1168	1168	0.77	1800	0.16	2200	12000	0.43	1800	0.09	2200	12000	
F 51 4_1296	1296	0.69	1800	0.15	2200	12000	0.39	1800	0.08	2200	12000	
F 51 4_1439	1439	0.63	1800	0.13	2200	12000	0.35	1800	0.07	2200	12000	

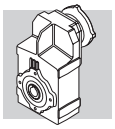

F 60 — 2900 Nm

	i	n_1 = 2800 min^{-1}					n_1 = 1400 min^{-1}					
		n_2 min^{-1}	M_{n2} Nm	P_{n1} kW	R_{n1} N	R_{n2} N	n_2 min^{-1}	M_{n2} Nm	P_{n1} kW	R_{n1} N	R_{n2} N	
F 60 3_9.0	9.0	311	920	32	—	13300	156	1160	20	—	16500	
F 60 3_9.7	9.7	289	1000	33	—	13600	144	1250	20	—	16700	
F 60 3_11.8	11.8	237	1030	28	—	14600	119	1300	17.4	—	17800	
F 60 3_12.7	12.7	220	1110	28	—	14700	110	1400	17.4	—	18000	
F 60 3_14.5	14.5	193	1110	24	—	15500	97	1400	15.3	—	19000	
F 60 3_15.7	15.7	178	1200	24	—	15600	89	1500	15.1	—	19200	
F 60 3_19.1	19.1	147	1200	19.9	—	16800	73	1500	12.4	—	20000	
F 60 3_20.7	20.7	135	1300	19.9	—	17000	68	1640	12.5	—	20000	
F 60 3_23.5	23.5	119	1260	17.0	—	17900	60	1590	10.7	—	20000	
F 60 3_25.4	25.4	110	1370	17.1	—	18100	55	1720	10.7	—	20000	
F 60 3_29.6	29.6	95	2750	29	820	15900	47	2900	15.5	2630	20000	
F 60 3_32.1	32.1	87	2800	28	1290	16200	44	2900	14.3	3260	20000	
F 60 3_38.8	38.8	72	2900	24	1260	17500	36	2900	11.8	3480	20000	
F 60 3_42.1	42.1	67	2900	22	1820	17900	33	2900	10.9	3720	20000	
F 60 3_47.8	47.8	59	2900	19.2	1770	19100	29.3	2900	9.6	3730	20000	
F 60 3_51.8	51.8	54	2900	17.7	2290	19500	27.0	2900	8.9	3830	20000	
F 60 3_63.0	63.0	44	2900	14.6	2310	20000	22.2	2900	7.3	3850	20000	
F 60 3_68.3	68.3	41	2900	13.4	2790	20000	20.5	2900	6.7	3940	20000	
F 60 3_77.6	77.6	36	2900	11.8	2620	20000	18.0	2900	5.9	3920	20000	
F 60 3_84.0	84.0	33	2900	10.9	2960	20000	16.7	2900	5.5	4010	20000	
F 60 3_98.2	98.2	28.5	2900	9.3	2910	20000	14.3	2900	4.7	3980	20000	
F 60 3_106.4	106.4	26.3	2900	8.6	3020	20000	13.2	2900	4.3	4070	20000	
F 60 3_120.5	120.5	23.2	2900	7.6	2970	20000	11.6	2900	3.8	4030	20000	
F 60 3_130.5	130.5	21.5	2900	7.0	3060	20000	10.7	2900	3.5	4110	20000	431
F 60 3_150.4	150.4	18.6	2900	6.1	3010	20000	9.3	2900	3.0	4060	20000	
F 60 3_162.9	162.9	17.2	2900	5.6	3090	20000	8.6	2900	2.8	4140	20000	
F 60 3_185.9	185.9	15.1	2900	4.9	3050	20000	7.5	2900	2.5	4100	20000	
F 60 3_201.4	201.4	13.9	2900	4.6	3130	20000	7.0	2900	2.3	4180	20000	
F 60 3_217.6	217.6	12.9	2900	4.2	3070	20000	6.4	2900	2.1	4120	20000	
F 60 3_235.8	235.8	11.9	2900	3.9	3140	20000	5.9	2900	1.9	4190	20000	
F 60 3_259.1	259.1	10.8	2900	3.5	3080	20000	5.4	2900	1.8	4130	20000	
F 60 3_280.7	280.7	10.0	2900	3.3	3150	20000	5.0	2900	1.6	4200	20000	
F 60 4_315.4	315.4	8.9	2900	3.0	3500	20000	4.4	2900	1.5	3500	20000	
F 60 4_341.7	341.7	8.2	2900	2.8	3500	20000	4.1	2900	1.4	3500	20000	
F 60 4_399.3	399.3	7.0	2900	2.4	3500	20000	3.5	2900	1.2	3500	20000	
F 60 4_432.6	432.6	6.5	2900	2.2	3500	20000	3.2	2900	1.1	3500	20000	
F 60 4_489.8	489.8	5.7	2900	1.9	3500	20000	2.9	2900	0.96	3500	20000	
F 60 4_530.7	530.7	5.3	2900	1.8	3500	20000	2.6	2900	0.89	3500	20000	
F 60 4_611.4	611.4	4.6	2900	1.5	3500	20000	2.3	2900	0.77	3500	20000	
F 60 4_662.4	662.4	4.2	2900	1.4	3500	20000	2.1	2900	0.71	3500	20000	
F 60 4_756.0	756.0	3.7	2900	1.2	3500	20000	1.9	2900	0.62	3500	20000	
F 60 4_819.0	819.0	3.4	2900	1.1	3500	20000	1.7	2900	0.57	3500	20000	
F 60 4_885.1	885.1	3.2	2900	1.1	3500	20000	1.6	2900	0.53	3500	20000	
F 60 4_958.9	958.9	2.9	2900	0.98	3500	20000	1.5	2900	0.49	3500	20000	
F 60 4_1054	1054	2.7	2900	0.89	3500	20000	1.3	2900	0.45	3500	20000	
F 60 4_1141	1141	2.5	2900	0.83	3500	20000	1.2	2900	0.41	3500	20000	

(—) 请联系我们的技术部门并告知径向负载信息 (转向, 力的方向, 位置)

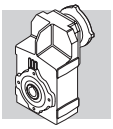

F 60 — 2900 Nm

	i	n_1 = 900 min^{-1}					n_1 = 500 min^{-1}					
		n_2 min^{-1}	M_{n2} Nm	P_{n1} kW	R_{n1} N	R_{n2} N	n_2 min^{-1}	M_{n2} Nm	P_{n1} kW	R_{n1} N	R_{n2} N	
F 60 3_9.0	9.0	100	1340	15.1	—	18800	56	1630	10.2	—	20000	
F 60 3_9.7	9.7	93	1460	15.3	—	19000	52	1780	10.4	—	20000	
F 60 3_11.8	11.8	76	1500	12.9	—	20000	42	1830	8.8	—	20000	
F 60 3_12.7	12.7	71	1620	13.0	—	20000	39	1900	8.4	600	20000	
F 60 3_14.5	14.5	62	1620	11.4	—	20000	34	1900	7.4	490	20000	
F 60 3_15.7	15.7	57	1750	11.3	—	20000	32	1900	6.8	1630	20000	
F 60 3_19.1	19.1	47	1750	9.3	—	20000	26.2	1900	5.6	1660	20000	
F 60 3_20.7	20.7	43	1900	9.3	—	20000	24.2	1900	5.2	2700	20000	
F 60 3_23.5	23.5	38	1840	8.0	—	20000	21.3	1900	4.6	2340	20000	
F 60 3_25.4	25.4	35	1900	7.6	620	20000	19.7	1900	4.2	3330	20000	
F 60 3_29.6	29.6	30	2900	10.0	4220	20000	16.9	2900	5.5	4700	20000	
F 60 3_32.1	32.1	28.0	2900	9.2	4350	20000	15.6	2900	5.1	4700	20000	
F 60 3_38.8	38.8	23.2	2900	7.6	4420	20000	12.9	2900	4.2	4700	20000	
F 60 3_42.1	42.1	21.4	2900	7.0	4530	20000	11.9	2900	3.9	4700	20000	
F 60 3_47.8	47.8	18.8	2900	6.2	4530	20000	10.5	2900	3.4	4700	20000	
F 60 3_51.8	51.8	17.4	2900	5.7	4640	20000	9.7	2900	3.2	4700	20000	
F 60 3_63.0	63.0	14.3	2900	4.7	4660	20000	7.9	2900	2.6	4700	20000	
F 60 3_68.3	68.3	13.2	2900	4.3	4700	20000	7.3	2900	2.4	4700	20000	
F 60 3_77.6	77.6	11.6	2900	3.8	4700	20000	6.4	2900	2.1	4700	20000	
F 60 3_84.0	84.0	10.7	2900	3.5	4700	20000	6.0	2900	1.9	4700	20000	
F 60 3_98.2	98.2	9.2	2900	3.0	4700	20000	5.1	2900	1.7	4700	20000	
F 60 3_106.4	106.4	8.5	2900	2.8	4700	20000	4.7	2900	1.5	4700	20000	
F 60 3_120.5	120.5	7.5	2900	2.4	4700	20000	4.1	2900	1.4	4700	20000	
F 60 3_130.5	130.5	6.9	2900	2.3	4700	20000	3.8	2900	1.3	4700	20000	431
F 60 3_150.4	150.4	6.0	2900	2.0	4700	20000	3.3	2900	1.1	4700	20000	
F 60 3_162.9	162.9	5.5	2900	1.8	4700	20000	3.1	2900	1.0	4700	20000	
F 60 3_185.9	185.9	4.8	2900	1.6	4700	20000	2.7	2900	0.88	4700	20000	
F 60 3_201.4	201.4	4.5	2900	1.5	4700	20000	2.5	2900	0.81	4700	20000	
F 60 3_217.6	217.6	4.1	2900	1.4	4700	20000	2.3	2900	0.75	4700	20000	
F 60 3_235.8	235.8	3.8	2900	1.3	4700	20000	2.1	2900	0.69	4700	20000	
F 60 3_259.1	259.1	3.5	2900	1.1	4700	20000	1.9	2900	0.63	4700	20000	
F 60 3_280.7	280.7	3.2	2900	1.1	4700	20000	1.8	2900	0.58	4700	20000	
F 60 4_315.4	315.4	2.9	2900	0.96	3500	20000	1.6	2900	0.53	3500	20000	
F 60 4_341.7	341.7	2.6	2900	0.89	3500	20000	1.5	2900	0.49	3500	20000	
F 60 4_399.3	399.3	2.3	2900	0.76	3500	20000	1.3	2900	0.42	3500	20000	
F 60 4_432.6	432.6	2.1	2900	0.70	3500	20000	1.2	2900	0.39	3500	20000	
F 60 4_489.8	489.8	1.8	2900	0.62	3500	20000	1.0	2900	0.34	3500	20000	
F 60 4_530.7	530.7	1.7	2900	0.57	3500	20000	0.94	2900	0.32	3500	20000	
F 60 4_611.4	611.4	1.5	2900	0.50	3500	20000	0.82	2900	0.28	3500	20000	
F 60 4_662.4	662.4	1.4	2900	0.46	3500	20000	0.75	2900	0.25	3500	20000	
F 60 4_756.0	756.0	1.2	2900	0.40	3500	20000	0.66	2900	0.22	3500	20000	
F 60 4_819.0	819.0	1.1	2900	0.37	3500	20000	0.61	2900	0.21	3500	20000	
F 60 4_885.1	885.1	1.0	2900	0.34	3500	20000	0.56	2900	0.19	3500	20000	
F 60 4_958.9	958.9	0.94	2900	0.32	3500	20000	0.52	2900	0.18	3500	20000	
F 60 4_1054	1054	0.85	2900	0.29	3500	20000	0.47	2900	0.16	3500	20000	
F 60 4_1141	1141	0.79	2900	0.27	3500	20000	0.44	2900	0.15	3500	20000	

(—) 请联系我们的技术部门并告知径向负载信息 (转向, 力的方向, 位置)

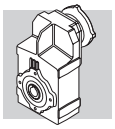

F 70 — 5000 Nm

	i	n_1 = 2800 min^{-1}					n_1 = 1400 min^{-1}					
		n_2 min^{-1}	M_{n2} Nm	P_{n1} kW	R_{n1} N	R_{n2} N	n_2 min^{-1}	M_{n2} Nm	P_{n1} kW	R_{n1} N	R_{n2} N	
F 70 3_10.0	10.0	280	2600	82	1410	14800	140	3200	51	1750	18200	435
F 70 3_10.9	10.9	257	2800	81	1510	14700	128	3450	50	1840	18100	
F 70 3_12.8	12.8	219	2900	72	860	15700	109	3600	44	880	19300	
F 70 3_13.9	13.9	201	3150	72	810	15600	101	3900	44	880	19100	
F 70 3_16.3	16.3	172	3250	63	570	16600	86	4000	39	710	20500	
F 70 3_17.7	17.7	158	3550	63	430	16400	79	4350	39	630	20200	
F 70 3_20.9	20.9	134	3450	52	690	18000	67	4000	30	2090	22700	
F 70 3_22.6	22.6	124	3750	52	640	17800	62	4350	30	2010	22500	
F 70 3_24.6	24.6	114	3550	46	560	19000	57	4000	26	2510	24200	
F 70 3_27.7	27.7	101	3750	43	5070	19600	51	4650	27	6410	24100	
F 70 3_30.0	30.0	93	4050	43	5080	19400	47	5000	26	6420	23900	
F 70 3_35.4	35.4	79	4150	37	5070	20900	40	5000	22	6440	25900	
F 70 3_38.4	38.4	73	4500	37	5060	20700	36	5000	21	6540	26500	
F 70 3_45.2	45.2	62	4600	32	5080	22200	31	5000	17.5	6590	28700	
F 70 3_49.0	49.0	57	4600	30	5170	22700	28.6	5000	16.1	6680	29300	
F 70 3_57.7	57.7	49	5000	27	5090	23800	24.3	5000	13.7	6680	31600	
F 70 3_62.5	62.5	45	5000	25	5170	24300	22.4	5000	12.7	6760	32300	
F 70 3_67.9	67.9	41	5000	23	5110	25500	20.6	5000	11.6	6710	33600	
F 70 3_73.6	73.6	38	5000	21	5190	26100	19.0	5000	10.7	6790	34400	
F 70 3_85.4	85.4	33	5000	18.5	5190	28000	16.4	5000	9.3	6780	35000	
F 70 3_92.5	92.5	30	5000	17.1	5260	28700	15.1	5000	8.5	6860	35000	
F 70 3_101.2	101.2	27.7	5000	15.6	5220	30000	13.8	5000	7.8	6820	35000	
F 70 3_109.6	109.6	25.5	5000	14.4	5290	30700	12.8	5000	7.2	6890	35000	
F 70 3_122.7	122.7	22.8	5000	12.9	5250	32300	11.4	5000	6.4	6850	35000	
F 70 3_133.0	133.0	21.1	5000	11.9	5320	33100	10.5	5000	5.9	6920	35000	
F 70 3_153.8	153.8	18.2	5000	10.3	5280	35000	9.1	5000	5.1	6880	35000	
F 70 3_166.7	166.7	16.8	5000	9.5	5350	35000	8.4	5000	4.7	6950	35000	
F 70 3_180.9	180.9	15.5	5000	8.7	5310	35000	7.7	5000	4.4	6910	35000	
F 70 3_196.0	196.0	14.3	5000	8.1	5370	35000	7.1	5000	4.0	6970	35000	
F 70 4_216.5	216.5	12.9	5000	7.5	2130	35000	6.5	5000	3.7	2860	35000	
F 70 4_234.6	234.6	11.9	5000	6.9	2130	35000	6.0	5000	3.5	2860	35000	
F 70 4_280.9	280.9	10.0	5000	5.8	2200	35000	5.0	5000	2.9	2940	35000	
F 70 4_304.3	304.3	9.2	5000	5.3	2200	35000	4.6	5000	2.7	2940	35000	
F 70 4_372.5	372.5	7.5	5000	4.4	2260	35000	3.8	5000	2.2	3000	35000	
F 70 4_403.5	403.5	6.9	5000	4.0	2260	35000	3.5	5000	2.0	3000	35000	
F 70 4_471.2	471.2	5.9	5000	3.4	2300	35000	3.0	5000	1.7	3040	35000	
F 70 4_510.4	510.4	5.5	5000	3.2	2300	35000	2.7	5000	1.6	3040	35000	
F 70 4_606.8	606.8	4.6	5000	2.7	2340	35000	2.3	5000	1.3	3070	35000	
F 70 4_657.4	657.4	4.3	5000	2.5	2340	35000	2.1	5000	1.2	3070	35000	
F 70 4_759.0	759.0	3.7	5000	2.1	2360	35000	1.8	5000	1.1	3090	35000	
F 70 4_822.2	822.2	3.4	5000	2.0	2360	35000	1.7	5000	1.0	3090	35000	
F 70 4_899.4	899.4	3.1	5000	1.8	2370	35000	1.6	5000	0.90	3110	35000	
F 70 4_974.4	974.4	2.9	5000	1.7	2370	35000	1.4	5000	0.83	3110	35000	
F 70 4_1091	1091	2.6	5000	1.5	2390	35000	1.3	5000	0.74	3120	35000	
F 70 4_1182	1182	2.4	5000	1.4	2390	35000	1.2	5000	0.69	3120	35000	
F 70 4_1368	1368	2.0	5000	1.2	2400	35000	1.0	5000	0.59	3130	35000	
F 70 4_1481	1481	1.9	5000	1.1	2400	35000	0.95	5000	0.55	3130	35000	
F 70 4_1585	1585	1.8	5000	1.0	2410	35000	0.88	5000	0.51	3140	35000	
F 70 4_1717	1717	1.6	5000	0.95	2410	35000	0.82	5000	0.47	3140	35000	
F 70 4_2019	2019	1.4	5000	0.80	2420	35000	0.69	5000	0.40	3150	35000	
F 70 4_2188	2188	1.3	5000	0.74	2420	35000	0.64	5000	0.37	3150	35000	

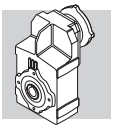

F 70 — 5000 Nm



	i	n_1 = 900 min^{-1}					n_1 = 500 min^{-1}					
		n_2 min^{-1}	M_{n2} Nm	P_{n1} kW	R_{n1} N	R_{n2} N	n_2 min^{-1}	M_{n2} Nm	P_{n1} kW	R_{n1} N	R_{n2} N	
F 70 3_10.0	10.0	90	3200	33	4870	21700	50	3200	18.1	7000	27000	
F 70 3_10.9	10.9	83	3450	32	4970	21700	46	3450	17.9	7000	27200	
F 70 3_12.8	12.8	70	3850	31	2540	22500	39	3600	15.9	7000	28300	
F 70 3_13.9	13.9	65	4200	31	2380	22400	36	3900	15.8	7000	28300	
F 70 3_16.3	16.3	55	4000	25	3830	24500	31	4000	13.9	7000	30700	
F 70 3_17.7	17.7	51	4350	25	3750	24400	28.2	4350	13.9	7000	30800	
F 70 3_20.9	20.9	43	4000	19.5	5210	27000	23.9	4000	10.8	7000	33700	
F 70 3_22.6	22.6	40	4350	19.6	5130	26900	22.1	4350	10.9	7000	33800	
F 70 3_24.6	24.6	37	4000	16.5	5630	28700	20.3	4000	9.2	7000	35000	
F 70 3_27.7	27.7	32	5000	18.4	7000	28100	18.1	4650	9.5	7000	35000	
F 70 3_30.0	30.0	30	5000	16.9	7000	28800	16.7	5000	9.4	7000	35000	
F 70 3_35.4	35.4	25.4	5000	14.4	7000	31000	14.1	5000	8.0	7000	35000	
F 70 3_38.4	38.4	23.4	5000	13.2	7000	31700	13.0	5000	7.4	7000	35000	
F 70 3_45.2	45.2	19.9	5000	11.2	7000	34100	11.1	5000	6.2	7000	35000	
F 70 3_49.0	49.0	18.4	5000	10.4	7000	34900	10.2	5000	5.8	7000	35000	
F 70 3_57.7	57.7	15.6	5000	8.8	7000	35000	8.7	5000	4.9	7000	35000	
F 70 3_62.5	62.5	14.4	5000	8.1	7000	35000	8.0	5000	4.5	7000	35000	
F 70 3_67.9	67.9	13.3	5000	7.5	7000	35000	7.4	5000	4.2	7000	35000	
F 70 3_73.6	73.6	12.2	5000	6.9	7000	35000	6.8	5000	3.8	7000	35000	
F 70 3_85.4	85.4	10.5	5000	6.0	7000	35000	5.9	5000	3.3	7000	35000	
F 70 3_92.5	92.5	9.7	5000	5.5	7000	35000	5.4	5000	3.1	7000	35000	
F 70 3_101.2	101.2	8.9	5000	5.0	7000	35000	4.9	5000	2.8	7000	35000	
F 70 3_109.6	109.6	8.2	5000	4.6	7000	35000	4.6	5000	2.6	7000	35000	
F 70 3_122.7	122.7	7.3	5000	4.1	7000	35000	4.1	5000	2.3	7000	35000	
F 70 3_133.0	133.0	6.8	5000	3.8	7000	35000	3.8	5000	2.1	7000	35000	
F 70 3_153.8	153.8	5.9	5000	3.3	7000	35000	3.3	5000	1.8	7000	35000	435
F 70 3_166.7	166.7	5.4	5000	3.0	7000	35000	3.0	5000	1.7	7000	35000	
F 70 3_180.9	180.9	5.0	5000	2.8	7000	35000	2.8	5000	1.6	7000	35000	
F 70 3_196.0	196.0	4.6	5000	2.6	7000	35000	2.6	5000	1.4	7000	35000	
F 70 4_216.5	216.5	4.2	5000	2.4	3430	35000	2.3	5000	1.3	3500	35000	
F 70 4_234.6	234.6	3.8	5000	2.2	3430	35000	2.1	5000	1.2	3500	35000	
F 70 4_280.9	280.9	3.2	5000	1.9	3500	35000	1.8	5000	1.0	3500	35000	
F 70 4_304.3	304.3	3.0	5000	1.7	3500	35000	1.6	5000	0.95	3500	35000	
F 70 4_372.5	372.5	2.4	5000	1.4	3500	35000	1.3	5000	0.78	3500	35000	
F 70 4_403.5	403.5	2.2	5000	1.3	3500	35000	1.2	5000	0.72	3500	35000	
F 70 4_471.2	471.2	1.9	5000	1.1	3500	35000	1.1	5000	0.62	3500	35000	
F 70 4_510.4	510.4	1.8	5000	1.0	3500	35000	0.98	5000	0.57	3500	35000	
F 70 4_606.8	606.8	1.5	5000	0.86	3500	35000	0.82	5000	0.48	3500	35000	
F 70 4_657.4	657.4	1.4	5000	0.79	3500	35000	0.76	5000	0.44	3500	35000	
F 70 4_759.0	759.0	1.2	5000	0.69	3500	35000	0.66	5000	0.38	3500	35000	
F 70 4_822.2	822.2	1.1	5000	0.63	3500	35000	0.61	5000	0.35	3500	35000	
F 70 4_899.4	899.4	1.0	5000	0.58	3500	35000	0.56	5000	0.32	3500	35000	
F 70 4_974.4	974.4	0.92	5000	0.54	3500	35000	0.51	5000	0.30	3500	35000	
F 70 4_1091	1091	0.82	5000	0.48	3500	35000	0.46	5000	0.27	3500	35000	
F 70 4_1182	1182	0.76	5000	0.44	3500	35000	0.42	5000	0.25	3500	35000	
F 70 4_1368	1368	0.66	5000	0.38	3500	35000	0.37	5000	0.21	3500	35000	
F 70 4_1481	1481	0.61	5000	0.35	3500	35000	0.34	5000	0.20	3500	35000	
F 70 4_1585	1585	0.57	5000	0.33	3500	35000	0.32	5000	0.18	3500	35000	
F 70 4_1717	1717	0.52	5000	0.30	3500	35000	0.29	5000	0.17	3500	35000	
F 70 4_2019	2019	0.45	5000	0.26	3500	35000	0.25	5000	0.14	3500	35000	
F 70 4_2188	2188	0.41	5000	0.24	3500	35000	0.23	5000	0.13	3500	35000	

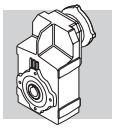

F 80 — 8000 Nm

	i	n_1 = 2800 min^{-1}					n_1 = 1400 min^{-1}					
		n_2 min^{-1}	M_{n2} Nm	P_{n1} kW	R_{n1} N	R_{n2} N	n_2 min^{-1}	M_{n2} Nm	P_{n1} kW	R_{n1} N	R_{n2} N	
F 80 3_10.3	10.3	272	3250	100	610	17200	136	4100	63	220	21800	
F 80 3_11.2	11.2	250	3520	99	620	17800	125	4440	63	230	21700	
F 80 3_12.9	12.9	217	3560	87	670	18900	109	4480	55	350	23100	
F 80 3_14.0	14.0	200	3850	87	700	18800	100	4860	55	310	23000	
F 80 3_16.2	16.2	173	3760	73	760	20300	86	4740	46	430	24800	
F 80 3_17.6	17.6	159	4000	72	730	20300	80	5140	46	410	24700	
F 80 3_20.3	20.3	138	4060	63	780	21700	69	5120	40	440	26500	
F 80 3_22.0	22.0	127	4400	63	780	21600	64	5540	40	470	26400	
F 80 3_25.2	25.2	111	4230	53	700	23300	56	5330	33	360	28500	
F 80 3_28.8	28.8	97	6550	72	4590	20500	49	8000	44	5890	25400	
F 80 3_31.3	31.3	89	7100	72	4590	20000	45	8000	40	6040	26000	
F 80 3_36.0	36.0	78	7250	64	4560	21500	39	8000	35	6110	28100	
F 80 3_39.0	39.0	72	6700	54	4890	23000	36	8000	32	6240	28800	
F 80 3_45.3	45.3	62	7900	55	4440	22700	31	8000	28	6240	31100	
F 80 3_49.1	49.1	57	8000	52	4750	23200	28.5	8000	26	6360	31900	
F 80 3_56.7	56.7	49	8000	45	4780	25200	24.7	8000	22	6390	34300	
F 80 3_61.5	61.5	46	8000	41	4890	25800	22.8	8000	21	6500	35100	
F 80 3_70.4	70.4	40	8000	36	4850	27800	19.9	8000	18.0	6460	37500	
F 80 3_76.3	76.3	37	8000	33	4950	28500	18.3	8000	16.6	6560	38400	
F 80 3_85.2	85.2	33	8000	30	4940	30300	16.4	8000	14.8	6550	40500	
F 80 3_92.3	92.3	30	8000	27	5040	31000	15.2	8000	13.7	6640	41500	
F 80 3_105.0	105.0	26.7	8000	24	5000	33200	13.3	8000	12.0	6610	44000	
F 80 3_113.8	113.8	24.6	8000	22	5090	34000	12.3	8000	11.1	6700	45000	
F 80 3_122.5	122.5	22.9	8000	21	5020	35400	11.4	8000	10.3	6630	45000	
F 80 3_132.7	132.7	21.1	8000	19.1	5110	36200	10.6	8000	9.5	6720	45000	
F 80 3_147.9	147.9	18.9	8000	17.1	5060	38200	9.5	8000	8.6	6660	45000	438
F 80 3_160.2	160.2	17.5	8000	15.8	5140	39100	8.7	8000	7.9	6750	45000	
F 80 3_184.6	184.6	15.2	8000	13.7	5090	41800	7.6	8000	6.9	6700	45000	
F 80 3_200.0	200.0	14.0	8000	12.7	5180	42800	7.0	8000	6.3	6780	45000	
F 80 4_218.5	218.5	12.8	8000	11.9	1020	45000	6.4	8000	5.9	2400	45000	
F 80 4_273.9	273.9	10.2	8000	9.5	1470	45000	5.1	8000	4.7	2680	45000	
F 80 4_296.7	296.7	9.4	8000	8.8	1470	45000	4.7	8000	4.4	2680	45000	
F 80 4_353.7	353.7	7.9	8000	7.3	1850	45000	4.0	8000	3.7	2770	45000	
F 80 4_383.2	383.2	7.3	8000	6.8	1850	45000	3.7	8000	3.4	2770	45000	
F 80 4_451.5	451.5	6.2	8000	5.8	2040	45000	3.1	8000	2.9	2820	45000	
F 80 4_489.1	489.1	5.7	8000	5.3	2040	45000	2.9	8000	2.7	2820	45000	
F 80 4_563.9	563.9	5.0	8000	4.6	2130	45000	2.5	8000	2.3	2860	45000	
F 80 4_610.9	610.9	4.6	8000	4.3	2130	45000	2.3	8000	2.1	2860	45000	
F 80 4_714.9	714.9	3.9	8000	3.6	2160	45000	2.0	8000	1.8	2890	45000	
F 80 4_774.4	774.4	3.6	8000	3.4	2160	45000	1.8	8000	1.7	2890	45000	
F 80 4_897.3	897.3	3.1	8000	2.9	2200	45000	1.6	8000	1.4	2930	45000	
F 80 4_972.0	972.0	2.9	8000	2.7	2200	45000	1.4	8000	1.3	2930	45000	
F 80 4_1058	1058	2.6	8000	2.5	2210	45000	1.3	8000	1.2	2950	45000	
F 80 4_1146	1146	2.4	8000	2.3	2210	45000	1.2	8000	1.1	2950	45000	
F 80 4_1277	1277	2.2	8000	2.0	2230	45000	1.1	8000	1.0	2960	45000	
F 80 4_1384	1384	2.0	8000	1.9	2230	45000	1.0	8000	0.94	2960	45000	
F 80 4_1578	1578	1.8	8000	1.6	2240	45000	0.89	8000	0.82	2970	45000	
F 80 4_1709	1709	1.6	8000	1.5	2240	45000	0.82	8000	0.76	2970	45000	
F 80 4_1834	1834	1.5	8000	1.4	2250	45000	0.76	8000	0.71	2980	45000	
F 80 4_1987	1987	1.4	8000	1.3	2250	45000	0.70	8000	0.65	2980	45000	

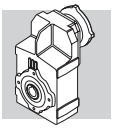

F 80 — 8000 Nm

	i	n_1 = 900 min^{-1}					n_1 = 500 min^{-1}					
		n_2 min^{-1}	M_{n2} Nm	P_{n1} kW	R_{n1} N	R_{n2} N	n_2 min^{-1}	M_{n2} Nm	P_{n1} kW	R_{n1} N	R_{n2} N	
F 80 3_10.3	10.3	87	4740	47	—	24700	49	5770	32	—	29300	
F 80 3_11.2	11.2	80	5140	47	—	24600	45	6250	32	—	29200	
F 80 3_12.9	12.9	70	5200	41	—	26200	39	6320	28	—	31100	
F 80 3_14.0	14.0	64	5620	41	—	26100	36	6800	27	—	31000	
F 80 3_16.2	16.2	56	5490	34	—	28200	31	6250	22	1540	34200	
F 80 3_17.6	17.6	51	5960	34	—	28100	28.4	6800	22	1410	30000	
F 80 3_20.3	20.3	44	5930	30	—	30100	24.6	6250	17.4	3710	37300	
F 80 3_22.0	22.0	41	6420	30	—	30000	22.7	6800	17.5	3590	37200	
F 80 3_25.2	25.2	36	6175	25	—	32400	19.8	6250	14.0	4660	40500	
F 80 3_28.8	28.8	31	8000	28	7000	31000	17.4	8000	15.7	7000	39600	
F 80 3_31.3	31.3	28.8	8000	26	7000	31700	16.0	8000	14.4	7000	40600	
F 80 3_36.0	36.0	25.0	8000	23	7000	34100	13.9	8000	12.6	7000	43300	
F 80 3_39.0	39.0	23.1	8000	21	7000	34900	12.8	8000	11.6	7000	44300	
F 80 3_45.3	45.3	19.9	8000	18.0	7000	37500	11.0	8000	10.0	7000	45000	
F 80 3_49.1	49.1	18.3	8000	16.6	7000	38400	10.2	8000	9.2	7000	45000	
F 80 3_56.7	56.7	15.9	8000	14.3	7000	41100	8.8	8000	8.0	7000	45000	
F 80 3_61.5	61.5	14.6	8000	13.2	7000	42000	8.1	8000	7.3	7000	45000	
F 80 3_70.4	70.4	12.8	8000	11.6	7000	44700	7.1	8000	6.4	7000	45000	
F 80 3_76.3	76.3	11.8	8000	10.7	7000	45000	6.6	8000	5.9	7000	45000	
F 80 3_85.2	85.2	10.6	8000	9.5	7000	45000	5.9	8000	5.3	7000	45000	
F 80 3_92.3	92.3	9.8	8000	8.8	7000	45000	5.4	8000	4.9	7000	45000	
F 80 3_105.0	105.0	8.6	8000	7.7	7000	45000	4.8	8000	4.3	7000	45000	
F 80 3_113.8	113.8	7.9	8000	7.1	7000	45000	4.4	8000	4.0	7000	45000	
F 80 3_122.5	122.5	7.3	8000	6.6	7000	45000	4.1	8000	3.7	7000	45000	
F 80 3_132.7	132.7	6.8	8000	6.1	7000	45000	3.8	8000	3.4	7000	45000	
F 80 3_147.9	147.9	6.1	8000	5.5	7000	45000	3.4	8000	3.1	7000	45000	438
F 80 3_160.2	160.2	5.6	8000	5.1	7000	45000	3.1	8000	2.8	7000	45000	
F 80 3_184.6	184.6	4.9	8000	4.4	7000	45000	2.7	8000	2.4	7000	45000	
F 80 3_200.0	200.0	4.5	8000	4.1	7000	45000	2.5	8000	2.3	7000	45000	
F 80 4_218.5	218.5	4.1	8000	3.8	3130	45000	2.3	8000	2.1	3500	45000	
F 80 4_273.9	273.9	3.3	8000	3.0	3240	45000	1.8	8000	1.7	3500	45000	
F 80 4_296.7	296.7	3.0	8000	2.8	3240	45000	1.7	8000	1.6	3500	45000	
F 80 4_353.7	353.7	2.5	8000	2.4	3330	45000	1.4	8000	1.3	3500	45000	
F 80 4_383.2	383.2	2.3	8000	2.2	3330	45000	1.3	8000	1.2	3500	45000	
F 80 4_451.5	451.5	2.0	8000	1.8	3380	45000	1.1	8000	1.0	3500	45000	
F 80 4_489.1	489.1	1.8	8000	1.7	3380	45000	1.0	8000	0.95	3500	45000	
F 80 4_563.9	563.9	1.6	8000	1.5	3420	45000	0.89	8000	0.82	3500	45000	
F 80 4_610.9	610.9	1.5	8000	1.4	3420	45000	0.82	8000	0.76	3500	45000	
F 80 4_714.9	714.9	1.3	8000	1.2	3460	45000	0.70	8000	0.65	3500	45000	
F 80 4_774.4	774.4	1.2	8000	1.1	3460	45000	0.65	8000	0.60	3500	45000	
F 80 4_897.3	897.3	1.0	8000	0.93	3490	45000	0.56	8000	0.52	3500	45000	
F 80 4_972.0	972.0	0.93	8000	0.86	3490	45000	0.51	8000	0.48	3500	45000	
F 80 4_1058	1058	0.85	8000	0.79	3500	45000	0.47	8000	0.44	3500	45000	
F 80 4_1146	1146	0.79	8000	0.73	3500	45000	0.44	8000	0.40	3500	45000	
F 80 4_1277	1277	0.70	8000	0.65	3500	45000	0.39	8000	0.36	3500	45000	
F 80 4_1384	1384	0.65	8000	0.60	3500	45000	0.36	8000	0.34	3500	45000	
F 80 4_1578	1578	0.57	8000	0.53	3500	45000	0.32	8000	0.29	3500	45000	
F 80 4_1709	1709	0.53	8000	0.49	3500	45000	0.29	8000	0.27	3500	45000	
F 80 4_1834	1834	0.49	8000	0.46	3500	45000	0.27	8000	0.25	3500	45000	
F 80 4_1987	1987	0.45	8000	0.42	3500	45000	0.25	8000	0.23	3500	45000	

(—) 请联系我们的技术部门并告知径向负载信息 (转向, 力的方向, 位置)

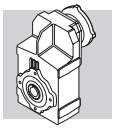

F 90 — 14000 Nm

	i	n_1 = 2800 min^{-1}					n_1 = 1400 min^{-1}					
		n_2 min^{-1}	M_{n2} Nm	P_{n1} kW	R_{n1} N	R_{n2} N	n_2 min^{-1}	M_{n2} Nm	P_{n1} kW	R_{n1} N	R_{n2} N	
F 90 3_10.3	10.3	272	6500	200	5480	23800	136	8000	123	8000	29300	
F 90 3_11.1	11.1	252	7150	204	5280	23300	126	8800	125	7770	28700	
F 90 3_13.4	13.4	209	7550	178	4880	25000	104	9300	110	7280	30700	
F 90 3_14.5	14.5	193	8100	177	5000	24700	97	10000	109	7400	30300	
F 90 3_16.5	16.5	170	8400	161	4540	26000	85	10300	99	6960	32000	
F 90 3_17.9	17.9	156	8950	158	4560	25700	78	11000	97	7180	31700	
F 90 3_20.6	20.6	136	9200	141	3980	27400	68	11300	87	6260	33700	
F 90 3_22.3	22.3	126	9750	138	4280	27100	63	12000	85	6590	33400	
F 90 3_25.4	25.4	110	10050	125	3620	28700	55	12000	75	6310	36000	
F 90 3_28.6	28.6	98	9750	108	9800	30900	49	12000	66	12400	38000	
F 90 3_31.0	31.0	90	10550	108	9800	30300	45	13000	66	12400	37300	
F 90 3_37.4	37.4	75	10950	93	9820	32800	37	13500	57	12400	40400	
F 90 3_40.5	40.5	69	11900	93	9820	32100	35	14000	55	12500	40600	
F 90 3_46.1	46.1	61	12050	83	9840	34300	30	14000	48	12600	43600	
F 90 3_49.9	49.9	56	13050	83	9840	33500	28.1	14000	44	12700	44700	
F 90 3_57.3	57.3	49	13050	72	9810	36300	24.4	14000	39	12700	48100	
F 90 3_62.1	62.1	45	14000	71	9830	35600	22.5	14000	36	12800	49300	
F 90 3_70.8	70.8	40	14000	63	9830	38500	19.8	14000	31	12800	52700	
F 90 3_76.7	76.7	37	14000	58	9960	39500	18.3	14000	29	13000	54000	
F 90 3_88.4	88.4	32	14000	50	9930	42800	15.8	14000	25	12900	55000	
F 90 3_95.8	95.8	29.2	14000	46	10100	43800	14.6	14000	23	13100	55000	
F 90 3_103.3	103.3	27.1	14000	43	9960	45900	13.6	14000	21	13000	55000	
F 90 3_111.9	111.9	25.0	14000	40	10100	47100	12.5	14000	19.8	13100	55000	
F 90 3_126.8	126.8	22.1	14000	35	10000	50300	11.0	14000	17.5	13000	55000	
F 90 3_137.3	137.3	20.4	14000	32	10100	51500	10.2	14000	16.1	13100	55000	
F 90 3_150.3	150.3	18.6	14000	29	10100	54000	9.3	14000	14.7	13100	55000	441
F 90 3_162.8	162.8	17.2	14000	27	10200	55000	8.6	14000	13.6	13200	55000	
F 90 3_179.2	179.2	15.6	14000	25	10200	55000	7.8	14000	12.4	13100	55000	
F 90 3_194.2	194.2	14.4	14000	23	10200	55000	7.2	14000	11.4	13200	55000	
F 90 4_213.6	213.6	13.1	14000	21	—	55000	6.6	14000	10.6	—	55000	
F 90 4_231.4	231.4	12.1	14000	19.6	—	55000	6.1	14000	9.8	—	55000	
F 90 4_268.7	268.7	10.4	14000	16.9	—	55000	5.2	14000	8.5	420	55000	
F 90 4_291.1	291.1	9.6	14000	15.6	—	55000	4.8	14000	7.8	420	55000	
F 90 4_361.8	361.8	7.7	14000	12.6	—	55000	3.9	14000	6.3	990	55000	
F 90 4_392.0	392.0	7.1	14000	11.6	—	55000	3.6	14000	5.8	990	55000	
F 90 4_457.5	457.5	6.1	14000	9.9	—	55000	3.1	14000	5.0	1390	55000	
F 90 4_495.6	495.6	5.6	14000	9.2	—	55000	2.8	14000	4.6	1390	55000	
F 90 4_577.5	577.5	4.8	14000	7.9	—	55000	2.4	14000	3.9	1600	55000	
F 90 4_625.6	625.6	4.5	14000	7.3	—	55000	2.2	14000	3.6	1600	55000	
F 90 4_714.0	714.0	3.9	14000	6.4	—	55000	2.0	14000	3.2	1800	55000	
F 90 4_773.4	773.4	3.6	14000	5.9	—	55000	1.8	14000	2.9	1800	55000	
F 90 4_910.2	910.2	3.1	14000	5.0	—	55000	1.5	14000	2.5	2020	55000	
F 90 4_986.0	986.0	2.8	14000	4.6	—	55000	1.4	14000	2.3	2020	55000	
F 90 4_1112	1112	2.5	14000	4.1	—	55000	1.3	14000	2.0	2110	55000	
F 90 4_1205	1205	2.3	14000	3.8	—	55000	1.2	14000	1.9	2110	55000	
F 90 4_1318	1318	2.1	14000	3.4	—	55000	1.1	14000	1.7	2220	55000	
F 90 4_1428	1428	2.0	14000	3.2	—	55000	0.98	14000	1.6	2220	55000	
F 90 4_1571	1571	1.8	14000	2.9	—	55000	0.89	14000	1.4	2260	55000	
F 90 4_1702	1702	1.6	14000	2.7	—	55000	0.82	14000	1.3	2260	55000	
F 90 4_1937	1937	1.4	14000	2.3	—	55000	0.72	14000	1.2	2300	55000	
F 90 4_2099	2099	1.3	14000	2.2	—	55000	0.67	14000	1.1	2300	55000	

(—) 请联系我们的技术部门并告知径向负载信息 (转向, 力的方向, 位置)

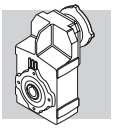

F 90 — 14000 Nm

	i	n_1 = 900 min^{-1}					n_1 = 500 min^{-1}					
		n_2 min^{-1}	M_{n2} Nm	P_{n1} kW	R_{n1} N	R_{n2} N	n_2 min^{-1}	M_{n2} Nm	P_{n1} kW	R_{n1} N	R_{n2} N	
F 90 3_10.3	10.3	87	9150	90	10000	33400	49	9600	53	15000	41900	
F 90 3_11.1	11.1	81	10050	92	9780	32700	45	10400	53	15000	41600	
F 90 3_13.4	13.4	67	10600	80	9270	35100	37	12500	53	12700	42100	
F 90 3_14.5	14.5	62	11400	80	9390	34600	34	13550	53	12700	41400	
F 90 3_16.5	16.5	55	11750	72	8890	36600	30	12300	42	14600	46400	
F 90 3_17.9	17.9	50	12550	71	9140	36200	27.9	13150	41	14800	46200	
F 90 3_20.6	20.6	44	12200	60	9100	39700	24.3	12200	33	15000	51000	
F 90 3_22.3	22.3	40	13200	60	9120	39000	22.4	13200	33	15000	50700	
F 90 3_25.4	25.4	35	12000	48	10400	43800	19.7	12000	27	15000	55000	
F 90 3_28.6	28.6	31	13700	49	14400	43400	17.5	14000	28	15000	55000	
F 90 3_31.0	31.0	29.0	14000	46	14500	44000	16.1	14000	26	15000	55000	
F 90 3_37.4	37.4	24.1	14000	38	14700	48400	13.4	14000	21	15000	55000	
F 90 3_40.5	40.5	22.2	14000	35	14800	49600	12.3	14000	19.5	15000	55000	
F 90 3_46.1	46.1	19.5	14000	31	14900	53000	10.8	14000	17.2	15000	55000	
F 90 3_49.9	49.9	18.0	14000	29	15000	54200	10.0	14000	15.8	15000	55000	
F 90 3_57.3	57.3	15.7	14000	25	15000	55000	8.7	14000	13.8	15000	55000	
F 90 3_62.1	62.1	14.5	14000	23	15000	55000	8.1	14000	12.7	15000	55000	
F 90 3_70.8	70.8	12.7	14000	20	15000	55000	7.1	14000	11.2	15000	55000	
F 90 3_76.7	76.7	11.7	14000	18.6	15000	55000	6.5	14000	10.3	15000	55000	
F 90 3_88.4	88.4	10.2	14000	16.1	15000	55000	5.7	14000	8.9	15000	55000	
F 90 3_95.8	95.8	9.4	14000	14.9	15000	55000	5.2	14000	8.3	15000	55000	
F 90 3_103.3	103.3	8.7	14000	13.8	15000	55000	4.8	14000	7.7	15000	55000	
F 90 3_111.9	111.9	8.0	14000	12.7	15000	55000	4.5	14000	7.1	15000	55000	
F 90 3_126.8	126.8	7.1	14000	11.2	15000	55000	3.9	14000	6.2	15000	55000	
F 90 3_137.3	137.3	6.6	14000	10.4	15000	55000	3.6	14000	5.8	15000	55000	
F 90 3_150.3	150.3	6.0	14000	9.5	15000	55000	3.3	14000	5.3	15000	55000	441
F 90 3_162.8	162.8	5.5	14000	8.7	15000	55000	3.1	14000	4.9	15000	55000	
F 90 3_179.2	179.2	5.0	14000	7.9	15000	55000	2.8	14000	4.4	15000	55000	
F 90 3_194.2	194.2	4.6	14000	7.3	15000	55000	2.6	14000	4.1	15000	55000	
F 90 4_213.6	213.6	4.2	14000	6.8	810	55000	2.3	14000	3.8	2350	55000	
F 90 4_231.4	231.4	3.9	14000	6.3	810	55000	2.2	14000	3.5	2350	55000	
F 90 4_268.7	268.7	3.3	14000	5.4	1390	55000	1.9	14000	3.0	2920	55000	
F 90 4_291.1	291.1	3.1	14000	5.0	1390	55000	1.7	14000	2.8	2920	55000	
F 90 4_361.8	361.8	2.5	14000	4.0	1960	55000	1.4	14000	2.2	3390	55000	
F 90 4_392.0	392.0	2.3	14000	3.7	1960	55000	1.3	14000	2.1	3390	55000	
F 90 4_457.5	457.5	2.0	14000	3.2	2360	55000	1.1	14000	1.8	3490	55000	
F 90 4_495.6	495.6	1.8	14000	2.9	2360	55000	1.0	14000	1.6	3490	55000	
F 90 4_577.5	577.5	1.6	14000	2.5	2570	55000	0.87	14000	1.4	3500	55000	
F 90 4_625.6	625.6	1.4	14000	2.3	2570	55000	0.80	14000	1.3	3500	55000	
F 90 4_714.0	714.0	1.3	14000	2.0	2770	55000	0.70	14000	1.1	3500	55000	
F 90 4_773.4	773.4	1.2	14000	1.9	2770	55000	0.65	14000	1.0	3500	55000	
F 90 4_910.2	910.2	0.99	14000	1.6	2840	55000	0.55	14000	0.89	3500	55000	
F 90 4_986.0	986.0	0.91	14000	1.5	2840	55000	0.51	14000	0.82	3500	55000	
F 90 4_1112	1112	0.81	14000	1.3	2860	55000	0.45	14000	0.73	3500	55000	
F 90 4_1205	1205	0.75	14000	1.2	2860	55000	0.41	14000	0.67	3500	55000	
F 90 4_1318	1318	0.68	14000	1.1	2890	55000	0.38	14000	0.62	3500	55000	
F 90 4_1428	1428	0.63	14000	1.0	2890	55000	0.35	14000	0.57	3500	55000	
F 90 4_1571	1571	0.57	14000	0.93	2900	55000	0.32	14000	0.52	3500	55000	
F 90 4_1702	1702	0.53	14000	0.86	2900	55000	0.29	14000	0.48	3500	55000	
F 90 4_1937	1937	0.46	14000	0.75	2910	55000	0.26	14000	0.42	3500	55000	
F 90 4_2099	2099	0.43	14000	0.70	2910	55000	0.24	14000	0.39	3500	55000	

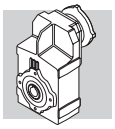

61 电机与减速机的组合范围

请注意下表中的中电机与减速机的组合，仅仅基于结构上的兼容性。

在选择减速电机时，参照第12章的步骤，并且满足条件S≥ f_S。

(D 56)

		IEC_ BN BE BX (IM B5)																								
		BN		BN	BE	BX	BN	BE	BX	BN	BE	BX	BN	BE	BX	BN	BE	BX	BN	BE	BX	BN	BE	BX	BN	IEC	IEC
P_{n1}(#) [kW]	2p	0.37	0.75	1.5	1.1	—	2.2	2.2	—	4	3	—	4	4	—	9.2	9.2	—	18.5	18.5	—	22	—	—	30	45	55
	4p	0.25	0.55	1.1	0.75	0.75	1.85	1.5	1.5	3	3	3	4	4	4	9.2	9.2	7.5	15	15	15	22	22	22	30	47	55
	6p	0.12	0.37	0.75	—	—	1.1	0.75	—	1.85	1.5	—	2.2	2.2	—	5.5	4	—	11	7.5	—	15	—	—	18.5	30	37
		P63	P71	P80			P90			P100			P112			P132			P160			P180			P200	P225	P250
F 10 2	i =	7.4_127.1		7.4_91.5						7.4_91.5																	
F 20 2		8.7_132.2 ⛀ (14.8_18.1)		6.4_114.3						6.4_114.3																	
F 20 3		156.3_545.3		156.3_545.3						156.3_545.3																	
F 25 2		9.4_44.4 ⛀ (10.6_13.0)		6.9_44.4						6.9_44.4																	
F 25 3		50.8_333.1		45.6_288.1						45.6_288.1																	
F 25 4		393.9_1374		393.9_1374						393.9_1374																	
F 31 2		18.5_44.6		6.9_44.6						6.9_44.6						6.9_37.7											
F 31 3		69.1_374.4		47.5_374.4						47.5_374.4						47.5_140.7											
F 31 4		418.9_1539		418.9_1539						418.9_1539																	
F 41 2		24.1_47.9		6.7_47.9						6.7_47.9						6.7_47.9											
F 41 3		84.9_344.8		51.5_344.8						51.5_344.8						51.5_168.7											
F 41 4		433.7_1411		433.7_1411						433.7_1411																	
F 51 2		30.0_37.1		7.2_37.1						7.2_37.1						7.2_37.1		7.2_37.1			7.2_37.1						
F 51 3		105.1_352.5		48.9_352.5						48.9_352.5						48.9_202.4		48.9_202.4			48.9_202.4						
F 51 4		429.1_1439		429.1_1439						429.1_1439																	
F 60 3		98.2_280.7		11.8_280.7 ⛀ (29.6_32.1)						11.8_280.7 ⛀ (29.6_32.1)						9.0_201.4		9.0_201.4			9.0_201.4						
F 60 4		315.4_1141		315.4_1141						315.4_1141																	
F 70 3				85.4_196.0						85.4_196.0						16.3_196.0 ⛀ (27.7_38.4)		10.0_196.0			10.0_196.0			10.0_49.0 ⛀ (20.9_24.6)		
F 70 4		372.5_2188		216.5_2188						216.5_2188						216.5_822.2											
F 80 3				105.0_200.0						105.0_200.0						20.3_200.0 ⛀ (28.8_49.1)		12.9_200.0 ⛀ (28.8_31.3)			10.3_200.0			10.3_132.7	10.3_132.7	
F 80 4		451.5_1987		218.5_1987						218.5_1987						218.5_972.0											
F 90 3				126.8_194.2						126.8_194.2						25.4_194.2 ⛀ (28.6_62.1)		20.6_194.2 ⛀ (28.6_49.9)			10.3_194.2			10.3_162.8	10.3_162.8	10.3_162.8
F 90 4		577.5_2099		213.6_2099						213.6_2099						213.6_1205		213.6_1205			213.6_1205					

（#） P_{n1} 最大输入功率

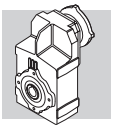

(D 57)

		M05	M1	ME2 - MX2	ME3 - MX3	ME4 - MX4	ME5 - MX5
F 10 2		7.4_127.1	7.4_71.1	7.4_91.5	7.4_91.5		
F 20 2		8.7_132.2 ⛀ (14.8_18.1)	8.7_90.4 ⛀ (14.8_18.1)	6.4_114.3	6.4_114.3		
F 20 3		156.3_545.3	156.3_545.3	156.3_545.3	156.3_545.3		
F 25 2		9.4_44.4 ⛀ (10.6_13.0)	9.4_44.4 ⛀ (10.6_13.0)	6.9_44.4	6.9_44.4		
F 25 3		50.8_333.1	50.8_227.8	45.6_288.1	45.6_288.1		
F 25 4		393.9_1374	393.9_1374	393.9_1374	393.9_1374		
F 31 2			18.5_44.6	6.9_44.6	6.9_44.6	6.9_37.7	
F 31 3			69.1_293.8	47.5_374.4	47.5_374.4	47.5_140.7	
F 31 4		418.9_1539	418.9_1539	418.9_1539	418.9_1539		
F 41 2			24.1_47.9	6.7_47.9	6.7_47.9	6.7_47.9	
F 41 3			84.9_344.8	51.5_344.8	51.5_344.8	51.5_168.7	
F 41 4	**i =**	433.7_1411	433.7_1411	433.7_1411	433.7_1411		
F 51 2			30.0_37.1	7.2_37.1	7.2_37.1	7.2_37.1	7.2_37.1
F 51 3			105.1_352.5	48.9_352.5	48.9_352.5	48.9_202.4	48.9_202.4
F 51 4			429.1_1439	429.1_1439	429.1_1439		
F 60 3				11.8_280.7 ⛀ (29.6_32.1)	11.8_280.7 ⛀ (29.6_32.1)	9_201.4	9_201.4
F 60 4			315.4_1141	315.4_1141	315.4_1141		
F 70 3				85.4_196.0	85.4_196.0	16.3_196.0 ⛀ (27.7_38.4)	16.3_196.0 ⛀ (27.7_38.4)
F 70 4			372.5_2188	216.5_2188	216.5_2188	216.5_822.2	
F 80 3					105.0_200.0	20.3_200.0 ⛀ (28.8_49.1)	20.3_200.0 ⛀ (28.8_49.1)
F 80 4			451.5_1987	218.5_1987	218.5_1987	218.5_972.0	
F 90 3					126.8_194.2	25.4_194.2 ⛀ (28.6_62.1)	25.4_194.2 ⛀ (28.6_62.1)
F 90 4				213.6_2099	213.6_2099	213.6_1205	

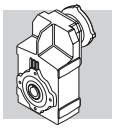

机座F10…F60提供与最常用伺服电机品牌匹配的电机接头。每个机座的图纸部分可查到伺服电机接头相关尺寸。

代码**SK**适用传统的平键输入，而**SC**则适用带有锁紧装置的输入端。

(D 58)

		SERVO INPUT							
		SK60A	SK60B	SK80A	SK80B	SK80C	SK95A	SK95B	SK95C
		SC60A	SC60B	SC80A	SC80B	SC80C	SC95A	SC95B	SC95C
F 10 2	i =	7.4_127.1	7.4_71.1	7.4_71.1		7.4_91.5	7.4_71.1	7.4_91.5	7.4_91.5
F 20 2		8.7_132.2 ⛀ (14.8_18.1)	8.7_90.4 ⛀ (14.8_18.1)	8.7_90.4 ⛀ (14.8_18.1)		6.4_114.3	8.7_90.4 ⛀ (14.8_18.1)	6.4_114.3	6.4_114.3
F 20 3		156.3_545.3	156.3_545.3	156.3_545.3		156.3_545.3	156.3_545.3	156.3_545.3	156.3_545.3
F 25 2		9.4_44.4 ⛀ (10.6_13.0)	9.4_44.4 ⛀ (10.6_13.0)	9.4_44.4 ⛀ (10.6_13.0)		6.9_44.4	9.4_44.4 ⛀ (10.6_13.0)	6.9_44.4	6.9_44.4
F 25 3		45.6_333.1	45.6_227.8	45.6_227.8		45.6_288.1	45.6_227.8	45.6_288.1	45.6_288.1
F 25 4		393.9_1374	393.9_1374	393.9_1374		393.9_1374	393.9_1374	393.9_1374	393.9_1374
F 31 2		18.5_44.6	18.5_44.6	18.5_44.6		6.9_44.6	18.5_44.6	6.9_44.6	6.9_44.6
F 31 3		69.1_374.4	69.1_293.8	69.1_293.8		47.5_374.4	69.1_293.8	47.5_374.4	47.5_374.4
F 31 4		418.9_1539	418.9_1539	418.9_1539		418.9_1539	418.9_1539	418.9_1539	418.9_1539
F 41 2					24.1_47.9	6.7_47.9	24.1_47.9	6.7_47.9	6.7_47.9
F 41 3					84.9_344.8	51.5_344.8	84.9_344.8	51.5_344.8	51.5_344.8
F 41 4		433.7_1411	433.7_1411	433.7_1411		433.7_1411	433.7_1411	433.7_1411	433.7_1411
F 51 2					30.0_37.1	7.2_37.1	30.0_37.1	7.2_37.1	7.2_37.1
F 51 3					105.1_352.5	48.9_352.5	105.1_352.5	48.9_352.5	48.9_352.5
F 51 4						429.1_1439	429.1_1439	429.1_1439	429.1_1439
F 60 3						11.8_280.7 ⛀ (29.6_32.1)	106.4_280.7	11.8_280.7 ⛀ (29.6_32.1)	11.8_280.7 ⛀ (29.6_32.1)
F 60 4					315.4_1141	315.4_1141	315.4_1141	315.4_1141	315.4_1141

(D 59)

		SERVO INPUT					
		SK110A	SK110B	SK130A	SK130B	SK180A	SK180B
		SC110A	SC110B	SC130A	SC130B	SC180A	SC180B
F 10 2	i =	7.4_91.5	7.4_91.5				
F 20 2		6.4_114.3	6.4_114.3				
F 20 3		156.3_545.3	156.3_545.3				
F 25 2		6.9_44.4	6.9_44.4				
F 25 3		45.6_288.1	45.6_288.1				
F 25 4		393.9_1374	393.9_1374				
F 31 2		6.9_44.6	6.9_44.6	6.9_44.6			
F 31 3		47.5_374.4	47.5_374.4	47.5_374.4			
F 31 4		418.9_1539	418.9_1539				
F 41 2		6.7_47.9	6.7_47.9	6.7_47.9	6.7_47.9	6.7_47.9	6.7_47.9
F 41 3		51.5_344.8	51.5_344.8	51.5_344.8	51.5_168.7	51.5_168.7	51.5_168.7
F 41 4		433.7_1411	433.7_1411				
F 51 2		7.2_37.1	7.2_37.1	7.2_37.1	7.2_37.1	7.2_37.1	7.2_37.1
F 51 3		48.9_352.5	48.9_352.5	48.9_352.5	48.9_202.4	48.9_202.4	48.9_202.4
F 51 4		429.1_1439	429.1_1439	429.1_1439			
F 60 3		11.8_280.7 ⛀ (29.6_32.1)	11.8_280.7 ⛀ (29.6_32.1)	11.8_280.7 ⛀ (29.6_32.1)	9.0_201.4	9.0_201.4	9.0_201.4
F 60 4		315.4_1141	315.4_1141	315.4_1141			

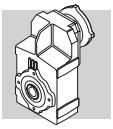

62 转动惯量

下表列出的转动惯量J_r [kgm2]是指减速机高速轴。图例使用的符号如下：



这种图标下的数值指不带电机的紧凑型输入接口的减速机。加上紧凑型电机的转动惯量（在相关的额定值表中给出），可以得到总的转动惯量。



这种图标下的数值指带IEC电机接口的减速机(IEC 标准尺寸...)。



这种图标下的数值指带实心输入轴的减速机。



这种图标下的数值指带伺服电机接口的减速机。

F 10

	i	J (•10-4) [kgm2]							
			IEC 63	71	80	90	100	112	
F 10 2_7.4	7.4	1.0	1.8	1.8	3.8	3.7	4.9	4.9	1.7
F 10 2_8.6	8.6	0.77	1.5	1.5	3.6	3.5	4.7	4.7	1.5
F 10 2_9.8	9.8	0.64	1.4	1.4	3.4	3.3	4.5	4.5	1.3
F 10 2_11.5	11.5	0.48	1.2	1.2	3.3	3.2	4.4	4.4	1.2
F 10 2_13.0	13.0	0.38	1.1	1.1	3.2	3.1	4.3	4.3	1.1
F 10 2_14.6	14.6	0.61	1.4	1.4	3.4	3.3	4.5	4.5	1.3
F 10 2_17.0	17.0	0.48	1.3	1.2	3.3	3.2	4.4	4.4	1.2
F 10 2_19.3	19.3	0.41	1.2	1.2	3.2	3.1	4.3	4.3	1.1
F 10 2_22.8	22.8	0.32	1.1	1.1	3.1	3.0	4.2	4.2	1.0
F 10 2_25.8	25.8	0.25	1.0	1.0	3.1	2.9	4.1	4.1	0.93
F 10 2_29.6	29.6	0.19	1.0	0.95	3.0	2.9	4.1	4.1	0.87
F 10 2_33.0	33.0	0.16	0.93	0.92	3.0	2.8	4.1	4.1	0.84
F 10 2_35.3	35.3	0.14	0.92	0.90	3.0	2.8	4.0	4.0	0.83
F 10 2_39.6	39.6	0.12	0.90	0.88	2.9	2.8	4.0	4.0	0.80
F 10 2_44.7	44.7	0.10	0.88	0.86	2.9	2.8	4.0	4.0	0.79
F 10 2_48.7	48.7	0.09	0.86	0.85	2.9	2.8	4.0	4.0	0.77
F 10 2_56.7	56.7	0.07	0.84	0.83	2.9	2.7	4.0	4.0	0.75
F 10 2_63.0	63.0	0.06	0.83	0.82	2.9	2.7	3.9	3.9	0.74
F 10 2_71.1	71.1	0.05	0.82	0.81	2.8	2.7	3.9	3.9	0.73
F 10 2_81.3	81.3	0.04	0.78	0.77	2.8	2.7	3.9	3.9	0.67
F 10 2_91.5	91.5	0.03	0.78	0.76	2.8	2.7	3.9	3.9	0.66
F 10 2_106.0	106.0	0.03	0.77	0.76	—	—	—	—	0.66
F 10 2_127.1	127.1	0.02	0.76	0.75	—	—	—	—	0.65

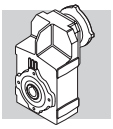

F 10

	i	J (•10-4) [kgm2]									
		SERVO									
		60A		60B 80A		95A		80C 95B 110A		95C 110B	
		SK	SC	SK	SC	SK	SC	SK	SC	SK	SC
F 10 2_7.4	7.4	1.3	1.5	1.3	1.7	3.8	4.3	3.8	4.3	3.7	4.7
F 10 2_8.6	8.6	1.0	1.3	1.1	1.5	3.6	4.0	3.6	4.1	3.5	4.5
F 10 2_9.8	9.8	0.91	1.2	0.93	1.4	3.5	3.9	3.4	3.9	3.3	4.3
F 10 2_11.5	11.5	0.75	1.0	0.77	1.2	3.3	3.7	3.3	3.8	3.2	4.2
F 10 2_13.0	13.0	0.65	0.91	0.67	1.1	3.2	3.6	3.2	3.7	3.1	4.1
F 10 2_14.6	14.6	0.88	1.1	0.91	1.3	3.4	3.9	3.4	3.9	3.3	4.3
F 10 2_17.0	17.0	0.75	1.0	0.77	1.2	3.3	3.7	3.3	3.8	3.2	4.2
F 10 2_19.3	19.3	0.68	0.94	0.70	1.1	3.2	3.7	3.2	3.7	3.1	4.1
F 10 2_22.8	22.8	0.59	0.85	0.61	1.0	3.1	3.6	3.1	3.6	3.0	4.0
F 10 2_25.8	25.8	0.52	0.78	0.54	0.98	3.1	3.5	3.1	3.6	2.9	3.9
F 10 2_29.6	29.6	0.46	0.72	0.48	0.92	3.0	3.4	3.0	3.5	2.9	3.9
F 10 2_33.0	33.0	0.43	0.69	0.45	0.89	3.0	3.4	3.0	3.5	2.8	3.8
F 10 2_35.3	35.3	0.41	0.67	0.43	0.87	3.0	3.4	3.0	3.5	2.8	3.8
F 10 2_39.6	39.6	0.39	0.65	0.41	0.85	2.9	3.3	2.9	3.4	2.8	3.8
F 10 2_44.7	44.7	0.37	0.63	0.39	0.83	2.9	3.4	2.9	3.4	2.8	3.8
F 10 2_48.7	48.7	0.36	0.62	0.38	0.82	2.9	3.3	2.9	3.4	2.8	3.8
F 10 2_56.7	56.7	0.34	0.60	0.36	0.80	2.9	3.3	2.9	3.4	2.7	3.7
F 10 2_63.0	63.0	0.33	0.59	0.35	0.79	2.9	3.3	2.9	3.4	2.7	3.7
F 10 2_71.1	71.1	0.32	0.58	0.34	0.78	2.9	3.3	2.8	3.3	2.7	3.7
F 10 2_81.3	81.3	0.31	0.57	—	—	—	—	2.8	3.3	2.7	3.7
F 10 2_91.5	91.5	0.30	0.56	—	—	—	—	2.8	3.3	2.7	3.7
F 10 2_106.0	106.0	0.30	0.56	—	—	—	—	—	—	—	—
F 10 2_127.1	127.1	0.29	0.55	—	—	—	—	—	—	—	—

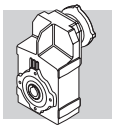

F 20

	i	J (•10-4) [kgm2]							
			IEC 63	IEC 71	IEC 80	IEC 90	IEC 100	IEC 112	
F 20 2_6.4	6.4	2.2	—	—	5.0	4.8	6.0	6.0	3.9
F 20 2_7.8	7.8	1.5	—	—	4.3	4.2	5.4	5.4	3.3
F 20 2_8.7	8.7	1.3	2.0	2.0	4.1	3.9	5.2	5.2	3.0
F 20 2_10.0	10.0	1.0	1.8	1.7	3.8	3.7	4.9	4.9	2.7
F 20 2_11.2	11.2	0.88	1.6	1.6	3.6	3.5	4.7	4.7	2.6
F 20 2_14.8	14.8	1.2	—	—	4.0	3.9	5.1	5.1	2.9
F 20 2_18.1	18.1	0.90	—	—	3.7	3.5	4.7	4.7	2.6
F 20 2_20.2	20.2	0.78	1.5	1.5	3.5	3.4	4.6	4.6	2.5
F 20 2_23.1	23.1	0.64	1.4	1.3	3.4	3.3	4.5	4.5	2.4
F 20 2_25.9	25.9	0.57	1.3	1.3	3.3	3.2	4.4	4.4	2.3
F 20 2_30.4	30.4	0.41	1.1	1.1	3.2	3.0	4.3	4.3	2.1
F 20 2_33.1	33.1	0.36	1.1	1.1	3.1	3.0	4.2	4.2	2.1
F 20 2_37.9	37.9	0.30	1.0	1.0	3.1	2.9	4.1	4.1	2.0
F 20 2_41.8	41.8	0.27	1.0	1.0	3.0	2.9	4.1	4.1	2.0
F 20 2_44.8	44.8	0.24	1.0	1.0	3.0	2.9	4.1	4.1	2.0
F 20 2_50.7	50.7	0.21	0.93	0.92	3.0	2.8	4.1	4.1	1.9
F 20 2_56.7	56.7	0.18	0.91	0.90	2.9	2.8	4.0	4.0	1.9
F 20 2_61.9	61.9	0.16	0.89	0.88	2.9	2.8	4.0	4.0	1.9
F 20 2_69.1	69.1	0.14	0.87	0.86	2.9	2.8	4.0	4.0	1.8
F 20 2_76.8	76.8	0.12	0.86	0.85	2.9	2.8	4.0	4.0	1.8
F 20 2_90.4	90.4	0.10	0.84	0.82	2.9	2.7	3.9	3.9	1.8
F 20 2_101.6	101.6	0.09	0.80	0.79	2.8	2.7	3.9	3.9	1.8
F 20 2_114.3	114.3	0.08	0.79	0.77	2.8	2.7	3.9	3.9	1.8
F 20 2_132.2	132.2	0.03	0.78	0.77	—	—	—	—	1.8
F 20 3_156.3	156.3	0.04	0.81	0.80	2.8	2.7	3.9	3.9	0.72
F 20 3_172.6	172.6	0.04	0.81	0.80	2.8	2.7	3.9	3.9	0.72
F 20 3_184.9	184.9	0.04	0.81	0.80	2.8	2.7	3.9	3.9	0.72
F 20 3_209.3	209.3	0.03	0.81	0.79	2.8	2.7	3.9	3.9	0.72
F 20 3_234.0	234.0	0.03	0.81	0.79	2.8	2.7	3.9	3.9	0.71
F 20 3_255.3	255.3	0.03	0.80	0.79	2.8	2.7	3.9	3.9	0.71
F 20 3_285.2	285.2	0.03	0.80	0.79	2.8	2.7	3.9	3.9	0.71
F 20 3_316.9	316.9	0.03	0.80	0.79	2.8	2.7	3.9	3.9	0.71
F 20 3_372.9	372.9	0.03	0.80	0.79	2.8	2.7	3.9	3.9	0.71
F 20 3_419.3	419.3	0.03	0.80	0.79	2.8	2.7	3.9	3.9	0.66
F 20 3_471.7	471.7	0.03	0.80	0.79	2.8	2.7	3.9	3.9	0.66
F 20 3_545.3	545.3	0.03	0.80	0.79	2.8	2.7	3.9	3.9	0.66

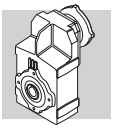

F 20

	i	J (•10-4) [kgm2]									
		SERVO									
		60A		60B 80A		95A		80C 95B 110A		95C 110B	
		SK	SC	SK	SC	SK	SC	SK	SC	SK	SC
F 20 2_6.4	6.4	—	—	—	—	—	—	5.0	5.5	4.8	5.8
F 20 2_7.8	7.8	—	—	—	—	—	—	4.3	4.8	4.2	5.2
F 20 2_8.7	8.7	1.6	1.8	1.6	2.0	4.1	4.6	4.1	4.6	3.9	4.9
F 20 2_10.0	10.0	1.3	1.5	1.3	1.7	3.8	4.3	3.8	4.3	3.7	4.7
F 20 2_11.2	11.2	1.2	1.4	1.2	1.6	3.7	4.1	3.6	4.1	3.5	4.5
F 20 2_14.8	14.8	—	—	—	—	—	—	4.0	4.5	3.9	4.9
F 20 2_18.1	18.1	—	—	—	—	—	—	3.7	4.2	3.5	4.5
F 20 2_20.2	20.2	1.1	1.3	1.1	1.5	3.6	4.0	3.5	4.0	3.4	4.4
F 20 2_23.1	23.1	0.91	1.2	0.93	1.4	3.5	3.9	3.4	3.9	3.3	4.3
F 20 2_25.9	25.9	0.84	1.1	0.86	1.3	3.4	3.8	3.3	3.8	3.2	4.2
F 20 2_30.4	30.4	0.68	0.94	0.70	1.1	3.2	3.7	3.2	3.7	3.0	4.0
F 20 2_33.1	33.1	0.63	0.89	0.65	1.1	3.2	3.6	3.1	3.6	3.0	4.0
F 20 2_37.9	37.9	0.47	0.83	0.59	1.0	3.1	3.6	3.1	3.6	2.9	3.9
F 20 2_41.8	41.8	0.44	0.80	0.56	1.0	3.1	3.5	3.0	3.5	2.9	3.9
F 20 2_44.8	44.8	0.41	0.77	0.53	0.97	3.1	3.5	3.0	3.5	2.9	3.9
F 20 2_50.7	50.7	0.48	0.74	0.50	0.94	3.0	3.5	3.0	3.5	2.8	3.8
F 20 2_56.7	56.7	0.45	0.71	0.47	0.91	3.0	3.4	2.9	3.4	2.8	3.8
F 20 2_61.9	61.9	0.43	0.69	0.45	0.89	3.0	3.4	2.9	3.4	2.8	3.8
F 20 2_69.1	69.1	0.41	0.67	0.43	0.87	3.0	3.4	2.9	3.4	2.8	3.8
F 20 2_76.8	76.8	0.39	0.65	0.41	0.85	2.9	3.4	2.9	3.4	2.8	3.8
F 20 2_90.4	90.4	0.37	0.63	0.39	0.83	2.9	3.4	2.9	3.4	2.7	3.7
F 20 2_101.6	101.6	0.36	0.62	—	—	—	—	2.8	3.3	2.7	3.7
F 20 2_114.3	114.3	0.35	0.61	—	—	—	—	2.8	3.3	2.7	3.7
F 20 2_132.2	132.2	0.30	0.56	—	—	—	—	—	—	—	—
F 20 3_156.3	156.3	0.31	0.57	0.33	0.77	2.9	3.3	2.8	3.3	2.7	3.7
F 20 3_172.6	172.6	0.31	0.57	0.33	0.77	2.9	3.3	2.8	3.3	2.7	3.7
F 20 3_184.9	184.9	0.31	0.57	0.33	0.77	2.9	3.3	2.8	3.3	2.7	3.7
F 20 3_209.3	209.3	0.30	0.56	0.32	0.76	2.9	3.3	2.8	3.3	2.7	3.7
F 20 3_234.0	234.0	0.30	0.56	0.32	0.76	2.9	3.3	2.8	3.3	2.7	3.7
F 20 3_255.3	255.3	0.30	0.56	0.32	0.76	2.9	3.3	2.8	3.3	2.7	3.7
F 20 3_285.2	285.2	0.30	0.56	0.32	0.76	2.9	3.3	2.8	3.3	2.7	3.7
F 20 3_316.9	316.9	0.30	0.56	0.32	0.76	2.9	3.3	2.8	3.3	2.7	3.7
F 20 3_372.9	372.9	0.30	0.56	0.32	0.76	2.9	3.3	2.8	3.3	2.7	3.7
F 20 3_419.3	419.3	0.30	0.56	0.32	0.76	2.9	3.3	2.8	3.3	2.7	3.7
F 20 3_471.7	471.7	0.30	0.56	0.32	0.76	2.9	3.3	2.8	3.3	2.7	3.7
F 20 3_545.3	545.3	0.30	0.56	0.32	0.76	2.9	3.3	2.8	3.3	2.7	3.7

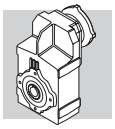

F 25

	i	J (•10-4) [kgm2]							
			IEC 63	IEC 71	IEC 80	IEC 90	IEC 100	IEC 112	
F 25 2_6.9	6.9	2.7	—	—	5.4	5.3	6.5	6.5	4.4
F 25 2_8.4	8.4	1.9	—	—	4.6	4.5	5.7	5.7	3.6
F 25 2_9.4	9.4	1.6	2.3	2.3	4.3	4.2	5.4	5.4	3.3
F 25 2_10.6	10.6	1.9	—	—	4.6	4.5	5.7	5.7	3.6
F 25 2_13.0	13.0	1.3	—	—	4.1	4.0	5.2	5.2	3.0
F 25 2_14.5	14.5	1.1	1.8	1.8	3.9	3.8	5.0	5.0	2.8
F 25 2_16.6	16.6	0.90	1.6	1.6	3.7	3.5	4.7	4.7	2.6
F 25 2_18.6	18.6	0.77	1.5	1.5	3.5	3.4	4.6	4.6	2.5
F 25 2_21.8	21.8	0.57	1.3	1.3	3.3	3.2	4.4	4.4	2.3
F 25 2_23.8	23.8	0.48	1.2	1.2	3.2	3.1	4.3	4.3	2.2
F 25 2_27.2	27.2	0.40	1.1	1.1	3.2	3.0	4.2	4.2	2.1
F 25 2_30.0	30.0	0.35	1.1	1.1	3.1	3.0	4.2	4.2	2.1
F 25 2_32.2	32.2	0.31	1.0	1.0	3.1	2.9	4.2	4.2	2.0
F 25 2_36.4	36.4	0.26	1.0	1.0	3.0	2.9	4.1	4.1	2.0
F 25 2_40.7	40.7	0.22	1.0	0.94	3.0	2.9	4.1	4.1	1.9
F 25 2_44.4	44.4	0.20	0.93	0.92	3.0	2.8	4.0	4.0	1.9
F 25 3_45.6	45.6	0.79	—	—	3.6	3.4	4.6	4.6	2.5
F 25 3_50.8	50.8	0.70	1.4	1.4	3.5	3.3	4.5	4.5	2.4
F 25 3_58.3	58.3	0.58	1.3	1.3	3.3	3.2	4.4	4.4	2.3
F 25 3_65.3	65.3	0.52	1.2	1.2	3.3	3.1	4.4	4.4	2.2
F 25 3_76.6	76.6	0.38	1.1	1.1	3.1	3.0	4.2	4.2	2.1
F 25 3_83.4	83.4	0.32	1.0	1.0	3.1	3.0	4.2	4.2	2.0
F 25 3_95.5	95.5	0.28	1.0	1.0	3.0	2.9	4.1	4.1	2.0
F 25 3_105.4	105.4	0.25	1.0	1.0	3.0	2.9	4.1	4.1	2.0
F 25 3_113.0	113.0	0.23	0.95	0.94	3.0	2.9	4.1	4.1	1.9
F 25 3_127.8	127.8	0.20	0.92	0.91	3.0	2.8	4.0	4.0	1.9
F 25 3_143.0	143.0	0.17	0.90	0.89	2.9	2.8	4.0	4.0	1.9
F 25 3_155.9	155.9	0.15	0.88	0.87	2.9	2.8	4.0	4.0	1.9
F 25 3_174.2	174.2	0.13	0.87	0.86	2.9	2.8	4.0	4.0	1.8
F 25 3_193.6	193.6	0.12	0.85	0.84	2.9	2.7	4.0	4.0	1.8
F 25 3_227.8	227.8	0.10	0.83	0.82	2.9	2.7	3.9	3.9	1.8
F 25 3_256.1	256.1	0.09	0.79	0.78	2.8	2.7	3.9	3.9	1.8
F 25 3_288.1	288.1	0.08	0.78	0.77	2.8	2.7	3.9	3.9	1.8
F 25 3_333.1	333.1	0.03	0.78	0.76	—	—	—	—	1.8
F 25 4_393.9	393.9	0.02	0.80	0.78	2.8	2.7	3.9	3.9	0.70
F 25 4_434.9	434.9	0.02	0.79	0.78	2.8	2.7	3.9	3.9	0.70
F 25 4_466.0	466.0	0.02	0.79	0.78	2.8	2.7	3.9	3.9	0.70
F 25 4_527.3	527.3	0.02	0.79	0.78	2.8	2.7	3.9	3.9	0.70
F 25 4_589.7	589.7	0.02	0.79	0.78	2.8	2.7	3.9	3.9	0.70
F 25 4_643.3	643.3	0.02	0.79	0.78	2.8	2.7	3.9	3.9	0.70
F 25 4_718.7	718.7	0.02	0.79	0.78	2.8	2.7	3.9	3.9	0.70
F 25 4_798.5	798.5	0.01	0.79	0.77	2.8	2.7	3.9	3.9	0.70
F 25 4_939.8	939.8	0.01	0.79	0.77	2.8	2.7	3.9	3.9	0.69
F 25 4_1057	1057	0.01	0.79	0.77	2.8	2.7	3.9	3.9	0.64
F 25 4_1189	1189	0.01	0.78	0.77	2.8	2.7	3.9	3.9	0.64
F 25 4_1374	1374	0.01	0.78	0.77	2.8	2.7	3.9	3.9	0.64

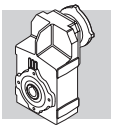

F 25

	i	J (•10-4) [kgm2]									
		SERVO									
		60A		60B 80A		95A		80C 95B 110A		95C 110B	
		SK	SC	SK	SC	SK	SC	SK	SC	SK	SC
F 25 2_6.9	6.9	—	—	—	—	—	—	5.4	5.9	5.3	6.3
F 25 2_8.4	8.4	—	—	—	—	—	—	4.6	5.1	4.5	5.5
F 25 2_9.4	9.4	1.9	2.1	1.9	2.3	4.4	4.9	4.3	4.8	4.2	5.2
F 25 2_10.6	10.6	—	—	—	—	—	—	4.6	5.1	4.5	5.5
F 25 2_13.0	13.0	—	—	—	—	—	—	4.1	4.6	4.0	5.0
F 25 2_14.5	14.5	1.4	1.6	1.4	1.8	3.9	4.4	3.9	4.4	3.8	4.8
F 25 2_16.6	16.6	1.2	1.4	1.2	1.6	3.7	4.2	3.7	4.2	3.5	4.5
F 25 2_18.6	18.6	1.0	1.3	1.1	1.5	3.6	4.0	3.5	4.0	3.4	4.4
F 25 2_21.8	21.8	0.84	1.1	0.86	1.3	3.4	3.8	3.3	3.8	3.2	4.2
F 25 2_23.8	23.8	0.75	1.0	0.77	1.2	3.3	3.7	3.2	3.7	3.1	4.1
F 25 2_27.2	27.2	0.67	0.93	0.69	1.1	3.2	3.7	3.2	3.7	3.0	4.0
F 25 2_30.0	30.0	0.62	0.88	0.64	1.1	3.2	3.6	3.1	3.6	3.0	4.0
F 25 2_32.2	32.2	0.58	0.84	1.4	1.8	3.1	3.6	3.1	3.6	2.9	3.9
F 25 2_36.4	36.4	0.53	0.79	0.55	0.99	3.1	3.5	3.0	3.5	2.9	3.9
F 25 2_40.7	40.7	0.49	0.75	0.51	0.95	3.0	3.5	3.0	3.5	2.9	3.9
F 25 2_44.4	44.4	0.47	0.73	0.49	0.93	3.0	3.5	3.0	3.5	2.8	3.8
F 25 3_45.6	45.6	1.1	1.3	1.1	1.5	3.6	4.0	3.6	4.1	3.4	4.4
F 25 3_50.8	50.8	0.97	1.2	0.99	1.4	3.5	4.0	3.5	4.0	3.3	4.3
F 25 3_58.3	58.3	0.85	1.1	0.87	1.3	3.4	3.8	3.3	3.8	3.2	4.2
F 25 3_65.3	65.3	0.79	1.1	0.84	1.2	3.3	3.8	3.3	3.8	3.1	4.1
F 25 3_76.6	76.6	0.65	0.91	0.67	1.1	3.2	3.6	3.1	3.6	3.0	4.0
F 25 3_83.4	83.4	0.59	0.85	0.61	1.0	3.1	3.6	3.1	3.6	3.0	4.0
F 25 3_95.5	95.5	0.55	0.81	0.57	1.0	3.1	3.5	3.0	3.5	2.9	3.9
F 25 3_105.4	105.4	0.52	0.78	0.54	0.98	3.1	3.5	3.0	3.5	2.9	3.9
F 25 3_113.0	113.0	0.50	0.76	0.52	0.96	3.1	3.5	3.0	3.5	2.9	3.9
F 25 3_127.8	127.8	0.47	0.73	0.49	0.93	3.0	3.5	3.0	3.5	2.8	3.8
F 25 3_143.0	143.0	0.44	0.70	0.46	0.90	3.0	3.4	2.9	3.4	2.8	3.8
F 25 3_155.9	155.9	0.42	0.68	0.44	0.88	3.0	3.4	2.9	3.4	2.8	3.8
F 25 3_174.2	174.2	0.40	0.66	0.42	0.86	3.0	3.4	2.9	3.4	2.8	3.8
F 25 3_193.6	193.6	0.39	0.65	0.41	0.85	2.9	3.4	2.9	3.4	2.7	3.7
F 25 3_227.8	227.8	0.37	0.63	0.39	0.83	2.9	3.4	2.9	3.4	2.7	3.7
F 25 3_256.1	256.1	0.36	0.62	—	—	—	—	2.8	3.3	2.7	3.7
F 25 3_288.1	288.1	0.35	0.61	—	—	—	—	2.8	3.3	2.7	3.7
F 25 3_333.1	333.1	0.30	0.56	—	—	—	—	—	—	—	—
F 25 4_393.9	393.9	0.29	0.55	0.31	0.75	2.8	3.3	2.8	3.3	2.7	3.7
F 25 4_434.9	434.9	0.29	0.55	0.31	0.75	2.8	3.3	2.8	3.3	2.7	3.7
F 25 4_466.0	466.0	0.29	0.55	0.31	0.75	2.8	3.3	2.8	3.3	2.7	3.7
F 25 4_527.3	527.3	0.29	0.55	0.31	0.75	2.8	3.3	2.8	3.3	2.7	3.7
F 25 4_589.7	589.7	0.29	0.55	0.31	0.75	2.8	3.3	2.8	3.3	2.7	3.7
F 25 4_643.3	643.3	0.29	0.55	0.31	0.75	2.8	3.3	2.8	3.3	2.7	3.7
F 25 4_718.7	718.7	0.29	0.55	0.31	0.75	2.8	3.3	2.8	3.3	2.7	3.7
F 25 4_798.5	798.5	0.28	0.54	0.30	0.74	2.8	3.3	2.8	3.3	2.7	3.7
F 25 4_939.8	939.8	0.28	0.54	0.30	0.74	2.8	3.3	2.8	3.3	2.7	3.7
F 25 4_1057	1057	0.28	0.54	0.30	0.74	2.8	3.3	2.8	3.3	2.7	3.7
F 25 4_1189	1189	0.28	0.54	0.30	0.74	2.8	3.3	2.8	3.3	2.7	3.7
F 25 4_1374	1374	0.28	0.54	0.30	0.74	2.8	3.3	2.8	3.3	2.7	3.7

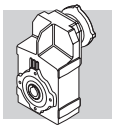

F 31

	i	J (•10-4) [kgm2]								
			IEC							
			63	71	80	90	100	112	132	
F 31 2_6.9	6.9	5.0	—	—	7.8	7.6	8.9	8.9	22	7.1
F 31 2_8.2	8.2	3.7	—	—	6.5	6.3	7.5	7.5	20	5.8
F 31 2_9.0	9.0	3.2	—	—	6.0	5.8	7.0	7.0	20	5.3
F 31 2_10.7	10.7	3.5	—	—	6.3	6.2	7.4	7.4	20	5.6
F 31 2_12.7	12.7	2.6	—	—	5.4	5.3	6.5	6.5	19	4.7
F 31 2_13.9	13.9	2.3	—	—	5.1	4.9	6.2	6.2	19	4.4
F 31 2_16.8	16.8	1.8	—	—	4.6	4.4	5.6	5.6	18	3.9
F 31 2_18.5	18.5	1.5	2.2	2.2	4.2	4.1	5.3	5.3	18	3.5
F 31 2_21.1	21.1	1.1	1.8	1.8	3.9	3.7	5.0	5.0	18	3.2
F 31 2_23.4	23.4	1.0	1.7	1.7	3.7	3.6	4.8	4.8	18	3.0
F 31 2_27.3	27.3	0.78	1.5	1.5	3.5	3.4	4.6	4.6	17	2.8
F 31 2_30.1	30.1	0.65	1.4	1.4	3.4	3.3	4.5	4.5	17	2.7
F 31 2_34.4	34.4	0.53	1.3	1.2	3.3	3.2	4.4	4.4	17	2.6
F 31 2_37.7	37.7	0.47	1.2	1.2	3.2	3.1	4.3	4.3	17	2.5
F 31 2_40.4	40.4	0.42	1.1	1.1	3.2	3.0	4.3	4.3	—	2.5
F 31 2_44.6	44.6	0.37	1.1	1.1	3.1	3.0	4.2	4.2	—	2.4
F 31 3_47.5	47.5	1.6	—	—	4.3	4.2	5.4	5.4	18	3.6
F 31 3_52.1	52.1	1.4	—	—	4.2	4.0	5.3	5.3	18	3.5
F 31 3_62.8	62.8	1.2	—	—	3.9	3.8	5.0	5.0	18	3.2
F 31 3_69.1	69.1	1.0	1.7	1.7	3.7	3.6	4.8	4.8	18	3.0
F 31 3_78.9	78.9	0.72	1.4	1.4	3.5	3.4	4.6	4.6	17	2.8
F 31 3_87.4	87.4	0.66	1.4	1.4	3.4	3.3	4.5	4.5	17	2.7
F 31 3_101.9	101.9	0.54	1.3	1.2	3.3	3.2	4.4	4.4	17	2.6
F 31 3_112.5	112.5	0.46	1.2	1.2	3.2	3.1	4.3	4.3	17	2.5
F 31 3_128.4	128.4	0.38	1.1	1.1	3.1	3.0	4.2	4.2	17	2.4
F 31 3_140.7	140.7	0.35	1.1	1.1	3.1	3.0	4.2	4.2	17	2.4
F 31 3_150.8	150.8	0.31	1.0	1.0	3.1	2.9	4.2	4.2	—	2.4
F 31 3_166.8	166.8	0.28	1.0	1.0	3.0	2.9	4.1	4.1	—	2.3
F 31 3_185.4	185.4	0.24	1.0	1.0	3.0	2.9	4.1	4.1	—	2.3
F 31 3_202.3	202.3	0.21	0.94	0.93	3.0	2.8	4.1	4.1	—	2.3
F 31 3_228.2	228.2	0.18	0.92	0.90	2.9	2.8	4.0	4.0	—	2.2
F 31 3_253.6	253.6	0.16	0.89	0.88	2.9	2.8	4.0	4.0	—	2.2
F 31 3_293.8	293.8	0.13	0.86	0.85	2.9	2.8	4.0	4.0	—	2.2
F 31 3_332.8	332.8	0.11	0.82	0.81	2.9	2.7	4.0	4.0	—	2.2
F 31 3_374.4	374.4	0.10	0.81	0.79	2.9	2.7	3.9	3.9	—	2.2
F 31 4_418.9	418.9	0.09	0.86	0.85	2.9	2.8	3.9	3.9	—	0.77
F 31 4_462.6	462.6	0.08	0.86	0.84	2.9	2.7	3.9	3.9	—	0.77
F 31 4_527.8	527.8	0.08	0.85	0.84	2.9	2.7	3.9	3.9	—	0.76
F 31 4_578.6	578.6	0.08	0.85	0.84	2.9	2.7	3.9	3.9	—	0.76
F 31 4_619.9	619.9	0.07	0.85	0.83	2.9	2.7	3.9	3.9	—	0.76
F 31 4_685.6	685.6	0.07	0.85	0.83	2.9	2.7	3.9	3.9	—	0.76
F 31 4_762.3	762.3	0.07	0.84	0.83	2.9	2.7	3.9	3.9	—	0.75
F 31 4_831.6	831.6	0.07	0.84	0.83	2.9	2.7	3.9	3.9	—	0.75
F 31 4_938.2	938.2	0.07	0.84	0.83	2.9	2.7	3.9	3.9	—	0.75
F 31 4_1042	1042	0.07	0.84	0.83	2.9	2.7	3.9	3.9	—	0.75
F 31 4_1208	1208	0.06	0.84	0.82	2.9	2.7	3.9	3.9	—	0.75
F 31 4_1368	1368	0.06	0.84	0.82	2.9	2.7	3.9	3.9	—	0.75
F 31 4_1539	1539	0.06	0.84	0.82	2.9	2.7	3.9	3.9	—	0.75

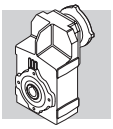

F 31

	i	J (•10-4) [kgm2]											
		SERVO											
		60A		60B 80A		95A		80C 95B 110A		95C 110B		130A	
		SK	SC	SK	SC	SK	SC	SK	SC	SK	SC	SK	SC
F 31 2_6.9	6.9	—	—	—	—	—	—	7.8	8.3	7.6	8.6	7.6	8.6
F 31 2_8.2	8.2	—	—	—	—	—	—	6.5	7.0	6.3	7.3	6.3	7.3
F 31 2_9.0	9.0	—	—	—	—	—	—	6.0	6.5	5.8	6.8	5.8	6.8
F 31 2_10.7	10.7	—	—	—	—	—	—	6.3	6.8	6.2	7.2	6.2	7.2
F 31 2_12.7	12.7	—	—	—	—	—	—	5.4	5.9	5.3	6.3	5.3	6.3
F 31 2_13.9	13.9	—	—	—	—	—	—	5.1	5.6	4.9	5.9	4.9	5.9
F 31 2_16.8	16.8	—	—	—	—	—	—	4.6	5.1	4.4	5.4	4.4	5.4
F 31 2_18.5	18.5	1.8	2.0	1.8	2.2	4.3	4.8	4.2	4.7	4.1	5.1	4.1	5.1
F 31 2_21.1	21.1	1.4	1.6	1.4	1.8	3.9	4.3	3.9	4.4	3.7	4.7	3.7	4.7
F 31 2_23.4	23.4	1.3	1.5	1.3	1.7	3.8	4.3	3.7	4.2	3.6	4.6	3.6	4.6
F 31 2_27.3	27.3	1.1	1.3	1.1	1.5	3.6	4.0	3.5	4.0	3.4	4.4	3.4	4.4
F 31 2_30.1	30.1	0.92	1.2	0.94	1.4	3.5	3.9	3.4	3.9	3.3	4.3	3.3	4.3
F 31 2_34.4	34.4	0.80	1.1	0.82	1.3	3.4	3.8	3.3	3.8	3.2	4.2	3.2	4.2
F 31 2_37.7	37.7	0.74	1.0	0.76	1.2	3.3	3.7	3.2	3.7	3.1	4.1	3.1	4.1
F 31 2_40.4	40.4	0.69	0.95	0.71	1.1	3.2	3.7	3.2	3.7	3.0	4.0	3.0	4.0
F 31 2_44.6	44.6	0.64	0.90	0.66	1.1	3.2	3.6	3.1	3.6	3.0	4.0	3.0	4.0
F 31 3_47.5	47.5	—	—	—	—	—	—	4.3	4.8	4.2	5.2	4.2	5.2
F 31 3_52.1	52.1	—	—	—	—	—	—	4.2	4.7	4.0	5.0	4.0	5.0
F 31 3_62.8	62.8	—	—	—	—	—	—	3.9	4.4	3.8	4.8	3.8	4.8
F 31 3_69.1	69.1	1.3	1.5	1.3	1.7	3.8	4.3	3.7	4.2	3.6	4.6	3.6	4.6
F 31 3_78.9	78.9	0.99	1.3	1.0	1.4	3.5	4.0	3.5	4.0	3.4	4.4	3.4	4.4
F 31 3_87.4	87.4	0.93	1.2	0.95	1.4	3.5	3.9	3.4	3.9	3.3	4.3	3.3	4.3
F 31 3_101.9	101.9	0.81	1.1	0.83	1.3	3.4	3.8	3.3	3.8	3.2	4.2	3.2	4.2
F 31 3_112.5	112.5	0.73	0.99	0.75	1.2	3.3	3.7	3.2	3.7	3.1	4.1	3.1	4.1
F 31 3_128.4	128.4	0.65	0.91	0.67	1.1	3.2	3.6	3.1	3.6	3.0	4.0	3.0	4.0
F 31 3_140.7	140.7	0.62	0.88	0.64	1.1	3.2	3.6	3.1	3.6	3.0	4.0	3.0	4.0
F 31 3_150.8	150.8	0.58	0.84	0.60	1.0	3.1	3.6	3.1	3.6	2.9	3.9	2.9	3.9
F 31 3_166.8	166.8	0.55	0.81	0.57	1.0	3.1	3.5	3.0	3.5	2.9	3.9	2.9	3.9
F 31 3_185.4	185.4	0.51	0.77	0.53	0.97	3.1	3.5	3.0	3.5	2.9	3.9	2.9	3.9
F 31 3_202.3	202.3	0.48	0.74	0.50	0.93	3.0	3.5	3.0	3.5	2.8	3.8	2.8	3.8
F 31 3_228.2	228.2	0.45	0.71	0.47	0.91	3.0	3.4	2.9	3.4	2.8	3.8	2.8	3.8
F 31 3_253.6	253.6	0.43	0.69	0.45	0.89	3.0	3.4	2.9	3.4	2.8	3.8	2.8	3.8
F 31 3_293.8	293.8	0.40	0.66	0.42	0.86	3.0	3.4	2.9	3.4	2.8	3.8	2.8	3.8
F 31 3_332.8	332.8	0.38	0.64	—	—	—	—	2.9	3.4	2.7	3.7	2.7	3.7
F 31 3_374.4	374.4	0.37	0.63	—	—	—	—	2.9	3.4	2.7	3.7	2.7	3.7
F 31 4_418.9	418.9	0.36	0.62	0.38	0.82	2.9	3.3	2.9	3.4	2.8	3.8	—	—
F 31 4_462.6	462.6	0.35	0.61	0.37	0.81	2.9	3.3	2.9	3.4	2.7	3.7	—	—
F 31 4_527.8	527.8	0.35	0.61	0.37	0.81	2.9	3.3	2.9	3.4	2.7	3.7	—	—
F 31 4_578.6	578.6	0.35	0.61	0.37	0.81	2.9	3.3	2.9	3.4	2.7	3.7	—	—
F 31 4_619.9	619.9	0.34	0.60	0.36	0.80	2.9	3.3	2.9	3.4	2.7	3.7	—	—
F 31 4_685.6	685.6	0.34	0.60	0.36	0.80	2.9	3.3	2.9	3.4	2.7	3.7	—	—
F 31 4_762.3	762.3	0.34	0.60	0.36	0.80	2.9	3.3	2.9	3.4	2.7	3.7	—	—
F 31 4_831.6	831.6	0.34	0.60	0.36	0.80	2.9	3.3	2.9	3.4	2.7	3.7	—	—
F 31 4_938.2	938.2	0.34	0.60	0.36	0.80	2.9	3.3	2.9	3.4	2.7	3.7	—	—
F 31 4_1042	1042	0.34	0.60	0.36	0.80	2.9	3.3	2.9	3.4	2.7	3.7	—	—
F 31 4_1208	1208	0.33	0.59	0.35	0.79	2.9	3.3	2.9	3.4	2.7	3.7	—	—
F 31 4_1368	1368	0.33	0.59	0.35	0.79	2.9	3.3	2.9	3.4	2.7	3.7	—	—
F 31 4_1539	1539	0.83	0.59	0.35	0.79	2.9	3.3	2.9	3.4	2.7	3.7	—	—

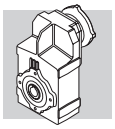

F 41

	i	J (•10-4) [kgm2]								
			IEC 63	IEC 71	IEC 80	IEC 90	IEC 100	IEC 112	IEC 132	
F 41 2_6.7	6.7	12	—	—	15	15	18	18	29	21
F 41 2_9.1	9.1	7.2	—	—	10	9.8	13	13	24	16
F 41 2_10.8	10.8	8.0	—	—	11	11	13	13	25	17
F 41 2_14.6	14.6	5.0	—	—	7.7	7.6	10	10	21	14
F 41 2_17.1	17.1	3.5	—	—	6.3	6.2	8.9	8.9	20	12
F 41 2_18.9	18.9	3.1	—	—	5.8	5.7	8.5	8.5	20	12
F 41 2_24.1	24.1	2.1	2.8	2.8	4.9	4.8	7.5	7.5	19	11
F 41 2_30.1	30.1	1.5	2.2	2.2	4.3	4.2	6.9	6.9	18	10
F 41 2_38.2	38.2	0.95	1.7	1.7	3.7	3.6	6.3	6.3	17	9.7
F 41 2_47.9	47.9	0.67	1.4	1.4	3.4	3.3	6.0	6.0	17	9.5
F 41 3_51.5	51.5	3.0	—	—	5.7	5.6	8.4	8.4	19	12
F 41 3_60.2	60.2	2.1	—	—	4.9	4.7	7.5	7.5	19	11
F 41 3_66.5	66.5	1.9	—	—	4.7	4.5	7.3	7.3	18	11
F 41 3_84.9	84.9	1.4	2.1	2.1	4.2	4.0	6.8	6.8	18	10
F 41 3_106.0	106.0	1.1	1.8	1.7	3.8	3.7	6.4	6.4	18	9.8
F 41 3_134.4	134.4	0.66	1.4	1.4	3.4	3.3	6.0	6.0	17	9.4
F 41 3_168.7	168.7	0.49	1.2	1.2	3.2	3.1	5.9	5.9	17	9.3
F 41 3_180.7	180.7	0.43	1.1	1.1	3.2	3.1	5.8	5.8	—	9.2
F 41 3_198.9	198.9	0.39	1.1	1.1	3.1	3.0	5.8	5.8	—	9.2
F 41 3_220.1	220.1	0.36	1.1	1.1	3.1	3.0	5.7	5.7	—	9.1
F 41 3_240.1	240.1	0.31	1.0	1.0	3.1	2.9	5.7	5.7	—	9.1
F 41 3_266.9	266.9	0.28	1.0	1.0	3.0	2.9	5.7	5.7	—	9.1
F 41 3_296.6	296.6	0.23	1.0	1.0	3.0	2.9	5.6	5.6	—	9.0
F 41 3_344.8	344.8	0.19	0.92	0.91	2.9	2.8	5.6	5.6	—	9.0
F 41 4_433.7	433.7	0.21	0.94	0.93	3.0	2.8	4.1	4.1	—	1.9
F 41 4_549.8	549.8	0.19	0.92	0.90	2.9	2.8	4.0	4.0	—	1.9
F 41 4_690.1	690.1	0.18	0.91	0.89	2.9	2.8	4.0	4.0	—	1.9
F 41 4_739.4	739.4	0.17	0.90	0.89	2.9	2.8	4.0	4.0	—	1.9
F 41 4_813.8	813.8	0.17	0.90	0.89	2.9	2.8	4.0	4.0	—	1.9
F 41 4_900.5	900.5	0.17	0.90	0.89	2.9	2.8	4.0	4.0	—	1.9
F 41 4_982.4	982.4	0.17	0.90	0.88	2.9	2.8	4.0	4.0	—	1.9
F 41 4_1092	1092	0.16	0.89	0.88	2.9	2.8	4.0	4.0	—	1.9
F 41 4_1213	1213	0.16	0.89	0.88	2.9	2.8	4.0	4.0	—	1.9
F 41 4_1411	1411	0.16	0.89	0.88	2.9	2.8	4.0	4.0	—	1.9

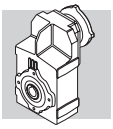

F 41

	i	J (•10-4) [kgm2]																	
		SERVO																	
		60A		60B 80A		80B		95A		80C 95B 110A		95C 110B		130A		130B 180A		180B	
		SK	SC	SK	SC	SK	SC	SK	SC	SK	SC	SK	SC	SK	SC	SK	SC	SK	SC
F 41 2_6.7	6.7	—	—	—	—	—	—	—	—	15	16	15	16	15	16	29	31	29	34
F 41 2_9.1	9.1	—	—	—	—	—	—	—	—	10	11	9.8	11	9.8	11	24	27	24	29
F 41 2_10.8	10.8	—	—	—	—	—	—	—	—	11	12	11	12	11	12	25	27	25	30
F 41 2_14.6	14.6	—	—	—	—	—	—	—	—	7.7	8.2	7.6	8.6	7.6	8.6	22	24	21	26
F 41 2_17.1	17.1	—	—	—	—	—	—	—	—	6.3	6.8	6.2	7.2	6.2	7.2	20	23	20	25
F 41 2_18.9	18.9	—	—	—	—	—	—	—	—	5.8	6.3	5.7	6.7	5.7	6.7	20	23	20	25
F 41 2_24.1	24.1	—	—	—	—	4.9	5.4	4.9	5.4	4.9	5.4	4.8	5.8	4.8	5.8	19	22	19	24
F 41 2_30.1	30.1	—	—	—	—	4.3	4.8	4.3	4.8	4.3	4.8	4.2	5.2	4.2	5.2	18	21	18	23
F 41 2_38.2	38.2	—	—	—	—	3.8	4.2	3.8	4.2	3.7	4.2	3.6	4.6	3.6	4.6	18	20	17	22
F 41 2_47.9	47.9	—	—	—	—	3.5	3.9	3.5	3.9	3.4	3.9	3.3	4.3	3.3	4.3	18	20	17	22
F 41 3_51.5	51.5	—	—	—	—	—	—	—	—	5.7	6.2	5.6	6.6	5.6	6.6	20	22	19	24
F 41 3_60.2	60.2	—	—	—	—	—	—	—	—	4.9	5.4	4.7	5.7	4.7	5.7	19	22	19	24
F 41 3_66.5	66.5	—	—	—	—	—	—	—	—	4.7	5.2	4.5	5.5	4.5	5.5	19	21	18	23
F 41 3_84.9	84.9	—	—	—	—	4.2	4.7	4.2	4.7	4.2	4.7	4.0	5.0	4.0	5.0	18	21	18	23
F 41 3_106.0	106.0	—	—	—	—	3.9	4.4	3.9	4.4	3.8	4.3	3.7	4.7	3.7	4.7	18	21	18	23
F 41 3_134.4	134.4	—	—	—	—	3.5	3.9	3.5	3.9	3.4	3.9	3.3	4.3	3.3	4.3	18	20	17	22
F 41 3_168.7	168.7	—	—	—	—	3.3	3.7	3.3	3.7	3.2	3.7	3.1	4.1	3.1	4.1	17	20	17	22
F 41 3_180.7	180.7	—	—	—	—	3.3	3.7	3.3	3.7	3.2	3.7	3.1	4.1	3.1	4.1	—	—	—	—
F 41 3_198.9	198.9	—	—	—	—	3.2	3.6	3.2	3.6	3.1	3.6	3.0	4.0	3.0	4.0	—	—	—	—
F 41 3_220.1	220.1	—	—	—	—	3.2	3.6	3.2	3.6	3.1	3.6	3.0	4.0	3.0	4.0	—	—	—	—
F 41 3_240.1	240.1	—	—	—	—	3.1	3.6	3.1	3.6	3.1	3.6	2.9	3.9	2.9	3.9	—	—	—	—
F 41 3_266.9	266.9	—	—	—	—	3.1	3.5	3.1	3.5	3.0	3.5	2.9	3.9	2.9	3.9	—	—	—	—
F 41 3_296.6	296.6	—	—	—	—	3.1	3.5	3.1	3.5	3.0	3.5	2.9	3.9	2.9	3.9	—	—	—	—
F 41 3_344.8	344.8	—	—	—	—	3.0	3.4	3.0	3.4	2.9	3.4	2.8	3.8	2.8	3.8	—	—	—	—
F 41 4_433.7	433.7	0.48	0.74	0.50	0.94	—	—	3.0	3.5	3.0	3.5	2.8	3.8	—	—	—	—	—	—
F 41 4_549.8	549.8	0.46	0.72	0.48	0.92	—	—	3.0	3.4	2.9	3.4	2.8	3.8	—	—	—	—	—	—
F 41 4_690.1	690.1	0.45	0.71	0.47	0.91	—	—	3.0	3.4	2.9	3.4	2.8	3.8	—	—	—	—	—	—
F 41 4_739.4	739.4	0.44	0.70	0.46	0.90	—	—	3.0	3.4	2.9	3.4	2.8	3.8	—	—	—	—	—	—
F 41 4_813.8	813.8	0.44	0.70	0.46	0.90	—	—	3.0	3.4	2.9	3.4	2.8	3.8	—	—	—	—	—	—
F 41 4_900.5	900.5	0.44	0.70	0.46	0.90	—	—	3.0	3.4	2.9	3.4	2.8	3.8	—	—	—	—	—	—
F 41 4_982.4	982.4	0.44	0.70	0.46	0.90	—	—	3.0	3.4	2.9	3.4	2.8	3.8	—	—	—	—	—	—
F 41 4_1092	1092	0.43	0.69	0.45	0.89	—	—	3.0	3.4	2.9	3.4	2.8	3.8	—	—	—	—	—	—
F 41 4_1213	1213	0.43	0.69	0.45	0.89	—	—	3.0	3.4	2.9	3.4	2.8	3.8	—	—	—	—	—	—
F 41 4_1411	1411	0.43	0.69	0.45	0.89	—	—	3.0	3.4	2.9	3.4	2.8	3.8	—	—	—	—	—	—

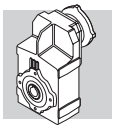

F 51

	i	J (•10-4) [kgm2]										
			IEC									
			63	71	80	90	100	112	132	160	180	
F 51 2_7.2	7.2	25	—	—	28	28	30	30	42	101	103	34
F 51 2_9.1	9.1	17	—	—	20	19	22	22	33	92	94	26
F 51 2_11.1	11.1	16	—	—	19	19	22	22	33	92	94	25
F 51 2_14.0	14.0	11	—	—	14	14	17	17	28	87	89	20
F 51 2_18.8	18.8	7.0	—	—	9.8	9.6	12	12	24	83	85	16
F 51 2_23.8	23.8	4.5	—	—	7.3	7.2	9.9	9.9	21	80	82	13
F 51 2_30.0	30.0	3.1	3.8	3.8	5.9	5.8	8.5	8.5	20	79	81	12
F 51 2_37.1	37.1	2.2	3.0	3.0	5.0	4.9	7.6	7.6	19	78	80	11
F 51 3_48.9	48.9	6.2	—	—	8.9	8.8	12	12	23	82	84	15
F 51 3_65.8	65.8	4.2	—	—	6.9	6.8	9.6	9.6	21	80	82	13
F 51 3_83.2	83.2	2.7	—	—	5.5	5.4	8.1	8.1	19	78	80	12
F 51 3_105.1	105.1	2.0	2.7	2.7	4.8	4.6	7.4	7.4	19	78	80	11
F 51 3_129.9	129.9	1.5	2.2	2.2	4.3	4.1	6.9	6.9	18	77	79	10
F 51 3_165.6	165.6	0.95	1.7	1.7	3.7	3.6	6.3	6.3	17	76	78	9.7
F 51 3_202.4	202.4	0.72	1.4	1.4	3.5	3.3	6.1	6.1	17	76	78	9.5
F 51 3_216.9	216.9	0.64	1.4	1.3	3.4	3.3	6.0	6.0	—	—	—	9.4
F 51 3_239.8	239.8	0.60	1.3	1.3	3.4	3.2	6.0	6.0	—	—	—	9.4
F 51 3_262.1	262.1	0.53	1.3	1.3	3.3	3.2	5.9	5.9	—	—	—	9.3
F 51 3_285.9	285.9	0.46	1.2	1.2	3.2	3.1	5.8	5.8	—	—	—	9.2
F 51 3_317.3	317.3	0.39	1.1	1.1	3.2	3.0	5.8	5.8	—	—	—	9.2
F 51 3_352.5	352.5	0.28	1.1	1.1	3.1	3.0	5.7	5.7	—	—	—	9.1
F 51 4_429.1	429.1	0.36	1.1	1.1	3.1	3.0	5.7	5.7	—	—	—	2.4
F 51 4_530.5	530.5	0.33	1.1	1.0	3.1	3.0	5.7	5.7	—	—	—	2.4
F 51 4_676.3	676.3	0.30	1.0	1.0	3.1	2.9	5.7	5.7	—	—	—	2.4
F 51 4_826.4	826.4	0.28	1.0	1.0	3.0	2.9	5.7	5.7	—	—	—	2.3
F 51 4_885.5	885.5	0.28	1.0	1.0	3.0	2.9	5.7	5.7	—	—	—	2.3
F 51 4_979.4	979.4	0.28	1.0	1.0	3.0	2.9	5.7	5.7	—	—	—	2.3
F 51 4_1070	1070	0.27	1.0	1.0	3.0	2.9	5.6	5.6	—	—	—	2.3
F 51 4_1168	1168	0.27	1.0	1.0	3.0	2.9	5.6	5.6	—	—	—	2.3
F 51 4_1296	1296	0.26	1.0	1.0	3.0	2.9	5.6	5.6	—	—	—	2.3
F 51 4_1439	1439	0.26	1.0	1.0	3.0	2.9	5.6	5.6	—	—	—	2.3

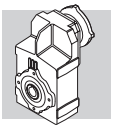

F 51

	i	J (•10-4) [kgm2]											
		SERVO											
		80B		95A		80C 95B 110A		95C 110B 130A		130B 180A		180B	
		SK	SC	SK	SC	SK	SC	SK	SC	SK	SC	SK	SC
F 51 2_7.2	7.2	—	—	—	—	28	29	28	23	42	44	42	47
F 51 2_9.1	9.1	—	—	—	—	20	21	19	20	34	36	33	38
F 51 2_11.1	11.1	—	—	—	—	19	20	19	20	33	35	33	38
F 51 2_14.0	14.0	—	—	—	—	14	15	14	15	28	30	28	33
F 51 2_18.8	18.8	—	—	—	—	9.8	10	9.6	11	24	26	24	29
F 51 2_23.8	23.8	—	—	—	—	7.3	7.8	7.2	8.2	21	24	21	26
F 51 2_30.0	30.0	5.9	6.4	5.9	6.4	5.9	6.4	5.8	6.8	20	23	20	25
F 51 2_37.1	37.1	5.0	5.5	5.0	5.5	5.0	5.5	4.9	5.9	19	22	19	24
F 51 3_48.9	48.9	—	—	—	—	8.9	9.4	8.8	9.8	23	26	23	28
F 51 3_65.8	65.8	—	—	—	—	6.9	7.4	6.8	7.8	21	24	21	26
F 51 3_83.2	83.2	—	—	—	—	5.5	6.0	5.4	6.4	20	22	19	24
F 51 3_105.1	105.1	4.8	5.3	4.8	5.3	4.8	5.3	4.6	5.6	19	21	19	24
F 51 3_129.9	129.9	4.3	4.8	4.3	4.8	4.3	4.8	4.1	5.1	18	21	18	23
F 51 3_165.6	165.6	3.8	4.2	3.8	4.2	3.7	4.2	3.6	4.6	18	20	17	22
F 51 3_202.4	202.4	3.5	4.0	3.5	4.0	3.5	4.0	3.3	4.3	18	20	17	22
F 51 3_216.9	216.9	3.5	3.9	3.5	3.9	3.4	3.9	3.3	4.3	—	—	—	—
F 51 3_239.8	239.8	3.4	3.9	3.4	3.9	3.4	3.9	3.2	4.2	—	—	—	—
F 51 3_262.1	262.1	3.4	3.8	3.4	3.8	3.3	3.8	3.2	4.2	—	—	—	—
F 51 3_285.9	285.9	3.3	3.7	3.3	3.7	3.2	3.7	3.1	4.1	—	—	—	—
F 51 3_317.3	317.3	3.2	3.6	3.2	3.6	3.2	3.7	3.0	4.0	—	—	—	—
F 51 3_352.5	352.5	3.1	3.5	3.1	3.5	3.1	3.6	3.0	4.0	—	—	—	—
F 51 4_429.1	429.1	—	—	3.2	3.6	3.1	3.6	3.0	4.0	—	—	—	—
F 51 4_530.5	530.5	—	—	3.2	3.6	3.1	3.6	3.0	4.0	—	—	—	—
F 51 4_676.3	676.3	—	—	3.1	3.6	3.1	3.6	2.9	3.9	—	—	—	—
F 51 4_826.4	826.4	—	—	3.1	3.5	3.0	3.5	2.9	3.9	—	—	—	—
F 51 4_885.5	885.5	—	—	3.1	3.5	3.0	3.5	2.9	3.9	—	—	—	—
F 51 4_979.4	979.4	—	—	3.1	3.5	3.0	3.5	2.9	3.9	—	—	—	—
F 51 4_1070	1070	—	—	3.1	3.5	3.0	3.5	2.9	3.9	—	—	—	—
F 51 4_1168	1168	—	—	3.1	3.5	3.0	3.5	2.9	3.9	—	—	—	—
F 51 4_1296	1296	—	—	3.1	3.5	3.0	3.5	2.9	3.9	—	—	—	—
F 51 4_1439	1439	—	—	3.1	3.5	3.0	3.5	2.9	3.9	—	—	—	—

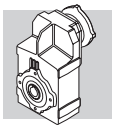

F 60

	i	J (•10-4) [kgm2]										
			IEC									
			63	71	80	90	100	112	132	160	180	
F 60 3_9.0	9.0	40	—	—	—	—	—	—	59	118	116	61
F 60 3_9.7	9.7	38	—	—	—	—	—	—	57	116	114	59
F 60 3_11.8	11.8	25	—	—	28	28	29	29	44	103	101	46
F 60 3_12.7	12.7	24	—	—	27	27	28	28	43	102	100	45
F 60 3_14.5	14.5	18	—	—	21	20	22	22	37	96	94	39
F 60 3_15.7	15.7	17	—	—	20	20	21	21	36	95	93	38
F 60 3_19.1	19.1	10	—	—	13	13	14	14	29	89	86	31
F 60 3_20.7	20.7	9.9	—	—	13	13	14	14	29	88	86	31
F 60 3_23.5	23.5	7.3	—	—	10	10	11	11	26	86	83	28
F 60 3_25.4	25.4	7.1	—	—	9.9	9.9	11	11	26	85	83	28
F 60 3_29.6	29.6	15	—	—	—	—	—	—	34	93	91	36
F 60 3_32.1	32.1	15	—	—	—	—	—	—	34	93	91	36
F 60 3_38.8	38.8	11	—	—	14	13	15	15	30	89	87	32
F 60 3_42.1	42.1	11	—	—	13	13	15	15	29	89	87	31
F 60 3_47.8	47.8	8.2	—	—	11	11	12	12	27	86	84	29
F 60 3_51.8	51.8	8.1	—	—	11	11	12	12	27	86	84	29
F 60 3_63.0	63.0	4.9	—	—	7.7	7.6	8.9	8.9	24	83	81	26
F 60 3_68.3	68.3	4.8	—	—	7.7	7.6	8.9	8.9	24	83	81	26
F 60 3_77.6	77.6	3.7	—	—	6.6	6.5	7.8	7.8	23	82	80	25
F 60 3_84.0	84.0	3.7	—	—	6.5	6.5	7.8	7.8	23	82	80	25
F 60 3_98.2	98.2	2.7	4.2	4.2	5.6	5.5	6.8	6.8	22	81	79	24
F 60 3_106.4	106.4	2.7	4.2	4.2	5.5	5.4	6.8	6.8	22	81	79	24
F 60 3_120.5	120.5	1.8	3.2	3.2	4.6	4.6	5.9	5.9	21	80	78	23
F 60 3_130.5	130.5	1.8	3.2	3.2	4.6	4.6	5.8	5.8	21	80	78	23
F 60 3_150.4	150.4	1.3	2.7	2.7	4.1	4.1	5.4	5.4	20	80	77	22
F 60 3_162.9	162.9	1.3	2.7	2.7	4.1	4.1	5.4	5.4	20	80	77	22
F 60 3_185.9	185.9	0.90	2.4	2.4	3.8	3.7	5.0	5.0	20	79	77	22
F 60 3_201.4	201.4	0.90	2.4	2.4	3.8	3.7	5.0	5.0	20	79	77	22
F 60 3_217.6	217.6	0.70	2.2	2.2	3.6	3.5	4.8	4.8	—	—	—	22
F 60 3_235.8	235.8	0.70	2.2	2.2	3.6	3.5	4.8	4.8	—	—	—	22
F 60 3_259.1	259.1	0.50	2.0	2.0	3.4	3.3	4.6	4.6	—	—	—	22
F 60 3_280.7	280.7	0.50	2.0	2.0	3.4	3.3	4.6	4.6	—	—	—	22

对于4级传动减速机的转动惯量，请咨询我司技术部门。

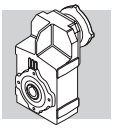

F 60

	i	J (•10-4) [kgm2] SERVO									
		95A		80C 95B 110A		95C 110B 130A		130B 180A		180B	
		SK	SC	SK	SC	SK	SC	SK	SC	SK	SC
F 60 3_9.0	9.0	—	—	—	—	—	—	57	59	59	64
F 60 3_9.7	9.7	—	—	—	—	—	—	55	57	57	62
F 60 3_11.8	11.8	—	—	28	29	28	29	42	44	44	49
F 60 3_12.7	12.7	—	—	27	28	27	28	41	43	43	48
F 60 3_14.5	14.5	—	—	21	22	20	21	35	37	37	42
F 60 3_15.7	15.7	—	—	20	21	20	21	34	36	36	41
F 60 3_19.1	19.1	—	—	13	14	13	14	27	29	29	34
F 60 3_20.7	20.7	—	—	13	14	13	14	27	29	29	34
F 60 3_23.5	23.5	—	—	10	11	10	11	24	27	26	31
F 60 3_25.4	25.4	—	—	9.9	10	9.9	11	24	27	26	31
F 60 3_29.6	29.6	—	—	—	—	—	—	32	34	34	39
F 60 3_32.1	32.1	—	—	—	—	—	—	32	34	34	39
F 60 3_38.8	38.8	—	—	14	15	13	14	28	30	30	35
F 60 3_42.1	42.1	—	—	13	14	13	14	28	30	29	34
F 60 3_47.8	47.8	—	—	11	12	11	12	25	28	27	32
F 60 3_51.8	51.8	—	—	11	12	11	12	25	28	27	32
F 60 3_63.0	63.0	—	—	7.7	8.2	7.6	8.6	22	24	24	29
F 60 3_68.3	68.3	—	—	7.7	8.2	7.6	8.6	22	24	24	29
F 60 3_77.6	77.6	—	—	6.6	7.1	6.5	7.5	21	23	23	28
F 60 3_84.0	84.0	—	—	6.5	7.0	6.5	7.5	21	23	23	28
F 60 3_98.2	98.2	—	—	5.6	6.1	5.5	6.5	20	22	22	27
F 60 3_106.4	106.4	5.5	6.0	5.5	6.0	5.4	6.4	20	22	22	27
F 60 3_120.5	120.5	2.2	2.7	4.6	5.1	4.6	5.6	19	21	21	26
F 60 3_130.5	130.5	2.2	2.7	4.6	5.1	4.6	5.6	19	21	21	26
F 60 3_150.4	150.4	4.1	4.6	4.1	4.6	4.1	5.1	18	21	20	25
F 60 3_162.9	162.9	4.1	4.6	4.1	4.6	4.1	5.1	18	21	20	25
F 60 3_185.9	185.9	3.7	4.2	3.8	4.3	3.7	4.7	18	20	20	25
F 60 3_201.4	201.4	3.7	4.2	3.8	4.3	3.7	4.7	18	20	20	25
F 60 3_217.6	217.6	3.5	4.0	3.6	4.1	3.5	4.5	—	—	—	—
F 60 3_235.8	235.8	3.5	4.0	3.6	4.1	3.5	4.5	—	—	—	—
F 60 3_259.1	259.1	3.3	3.8	3.4	3.9	3.3	4.3	—	—	—	—
F 60 3_280.7	280.7	3.3	3.8	3.4	3.9	3.3	4.3	—	—	—	—

对于4级传动减速机的转动惯量，请咨询我司技术部门。

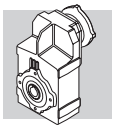

F 70

	i	J (•10-4) [kgm2]									
			IEC								
			80	90	100	112	132	160	180	200	
F 70 3_10.0	10.0	—	—	—	—	—	—	169	167	176	133
F 70 3_10.9	10.9	—	—	—	—	—	—	166	163	173	129
F 70 3_12.8	12.8	—	—	—	—	—	—	139	137	146	102
F 70 3_13.9	13.9	—	—	—	—	—	—	137	135	144	100
F 70 3_16.3	16.3	39	—	—	—	—	58	117	115	124	80
F 70 3_17.7	17.7	37	—	—	—	—	56	116	113	123	79
F 70 3_20.9	20.9	26	—	—	—	—	45	105	102	—	68
F 70 3_22.6	22.6	26	—	—	—	—	44	104	102	—	67
F 70 3_24.6	24.6	21	—	—	—	—	40	99	97	—	62
F 70 3_27.7	27.7	—	—	—	—	—	—	128	126	135	73
F 70 3_30.0	30.0	—	—	—	—	—	—	127	125	134	73
F 70 3_35.4	35.4	—	—	—	—	—	—	114	112	121	77
F 70 3_38.4	38.4	—	—	—	—	—	—	114	111	121	77
F 70 3_45.2	45.2	23	—	—	—	—	42	101	99	108	65
F 70 3_49.0	49.0	23	—	—	—	—	42	101	99	108	65
F 70 3_57.7	57.7	17	—	—	—	—	36	95	93	—	58
F 70 3_62.5	62.5	17	—	—	—	—	36	95	93	—	58
F 70 3_67.9	67.9	14	—	—	—	—	33	92	90	—	55
F 70 3_73.6	73.6	14	—	—	—	—	33	92	90	—	55
F 70 3_85.4	85.4	9.0	11	11	13	13	28	87	85	—	50
F 70 3_92.5	92.5	9.0	11	11	13	13	28	87	85	—	50
F 70 3_101.2	101.2	6.3	8.9	8.8	10	10	25	85	82	—	47
F 70 3_109.6	109.6	6.3	8.9	8.8	10	10	25	85	82	—	47
F 70 3_122.7	122.7	5.1	7.9	7.8	9.1	9.1	24	83	81	—	46
F 70 3_133.0	133.0	5.1	7.9	7.8	9.1	9.1	24	83	81	—	46
F 70 3_153.8	153.8	3.2	6.0	6.0	7.3	7.3	22	81	79	—	44
F 70 3_166.7	166.7	3.2	6.0	6.0	7.3	7.3	22	81	79	—	44
F 70 3_180.9	180.9	2.3	5.1	5.1	6.3	6.3	21	81	78	—	43
F 70 3_196.0	196.0	2.3	5.1	5.0	6.3	6.3	21	81	78	—	43

对于4级传动减速机的转动惯量，请咨询我司技术部门。

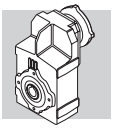

F 80

	i	J (•10-4) [kgm2]										
			IEC									
			80	90	100	112	132	160	180	200	225	
F 80 3_10.3	10.3	—	—	—	—	—	—	—	286	300	578	252
F 80 3_11.2	11.2	—	—	—	—	—	—	—	277	291	569	244
F 80 3_12.9	12.9	—	—	—	—	—	—	217	218	231	509	184
F 80 3_14.0	14.0	—	—	—	—	—	—	212	212	226	504	178
F 80 3_16.2	16.2	—	—	—	—	—	—	173	171	180	464	136
F 80 3_17.6	17.6	—	—	—	—	—	—	170	167	177	461	133
F 80 3_20.3	20.3	60	—	—	—	—	79	139	136	146	431	102
F 80 3_22.0	22.0	58	—	—	—	—	77	136	134	143	429	100
F 80 3_25.2	25.2	43	—	—	—	—	62	121	119	150	413	84
F 80 3_28.8	28.8	—	—	—	—	—	—	—	189	203	480	155
F 80 3_31.3	31.3	—	—	—	—	—	—	—	188	201	479	154
F 80 3_36.0	36.0	—	—	—	—	—	—	155	155	169	447	121
F 80 3_39.0	39.0	—	—	—	—	—	—	154	154	168	446	121
F 80 3_45.3	45.3	—	—	—	—	—	—	133	132	141	425	97
F 80 3_49.1	49.1	—	—	—	—	—	—	133	131	140	425	97
F 80 3_56.7	56.7	35	—	—	—	—	54	113	111	120	406	77
F 80 3_61.5	61.5	35	—	—	—	—	54	113	111	120	406	76
F 80 3_70.4	70.4	27	—	—	—	—	46	105	103	133	397	68
F 80 3_76.3	76.3	27	—	—	—	—	45	105	103	133	396	68
F 80 3_85.2	85.2	20	—	—	—	—	39	99	96	126	389	62
F 80 3_92.3	92.3	20	—	—	—	—	39	99	96	126	389	61
F 80 3_105.0	105.0	14	16	16	17	17	32	92	90	119	383	55
F 80 3_113.8	113.8	14	16	16	17	17	32	92	90	119	382	55
F 80 3_122.5	122.5	13	15	15	17	17	32	91	89	118	381	54
F 80 3_132.7	132.7	13	15	15	16	16	31	91	89	118	381	54
F 80 3_147.9	147.9	8.5	11	11	13	13	27	87	85	—	—	50
F 80 3_160.2	160.2	8.5	11	11	13	13	27	87	84	—	—	50
F 80 3_184.6	184.6	5.1	7.9	7.8	9.1	9.1	24	83	81	—	—	46
F 80 3_200.0	200.0	5.0	7.9	7.8	9.1	9.1	24	83	81	—	—	46

对于4级传动减速机的转动惯量，请咨询我司技术部门。

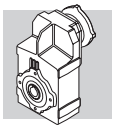

F 90

	i	J (•10-4) [kgm2]											
			IEC										
			80	90	100	112	132	160	180	200	225	250	
F 90 3_10.3	10.3	—	—	—	—	—	—	—	549	559	843	870	850
F 90 3_11.1	11.1	—	—	—	—	—	—	—	529	539	823	850	830
F 90 3_13.4	13.4	—	—	—	—	—	—	—	373	383	667	694	674
F 90 3_14.5	14.5	—	—	—	—	—	—	—	361	371	655	682	662
F 90 3_16.5	16.5	—	—	—	—	—	—	—	286	296	580	607	587
F 90 3_17.9	17.9	—	—	—	—	—	—	—	278	288	572	599	579
F 90 3_20.6	20.6	—	—	—	—	—	—	224	222	232	516	542	513
F 90 3_22.3	22.3	—	—	—	—	—	—	220	217	227	511	537	508
F 90 3_25.4	25.4	103	—	—	—	—	122	181	179	188	474	500	471
F 90 3_28.6	28.6	—	—	—	—	—	—	—	291	301	585	613	593
F 90 3_31.0	31.0	—	—	—	—	—	—	—	289	299	583	610	590
F 90 3_37.4	37.4	—	—	—	—	—	—	—	222	232	516	543	523
F 90 3_40.5	40.5	—	—	—	—	—	—	—	220	230	514	541	521
F 90 3_46.1	46.1	—	—	—	—	—	—	—	186	196	480	507	487
F 90 3_49.9	49.9	—	—	—	—	—	—	—	185	195	479	506	486
F 90 3_57.3	57.3	—	—	—	—	—	—	161	158	168	452	479	450
F 90 3_62.1	62.1	—	—	—	—	—	—	160	158	167	451	478	449
F 90 3_70.8	70.8	61	—	—	—	—	80	139	137	146	432	458	429
F 90 3_76.7	76.7	60	—	—	—	—	79	139	136	146	431	458	429
F 90 3_88.4	88.4	44	—	—	—	—	63	123	120	151	414	441	412
F 90 3_95.8	95.8	44	—	—	—	—	63	122	120	151	414	441	412
F 90 3_103.3	103.3	41	—	—	—	—	59	119	117	146	410	436	408
F 90 3_111.9	111.9	40	—	—	—	—	59	119	116	146	409	436	407
F 90 3_126.8	126.8	26	29	29	30	30	45	105	102	132	395	422	393
F 90 3_137.3	137.3	26	29	29	30	30	45	104	102	132	395	422	393
F 90 3_150.3	150.3	21	24	24	25	25	40	100	97	127	390	417	388
F 90 3_162.8	162.8	21	24	24	25	25	40	100	97	127	390	417	388
F 90 3_179.2	179.2	14	16	16	18	18	33	92	90	—	—	—	381
F 90 3_194.2	194.2	14	16	16	17	17	33	92	90	—	—	—	381

对于4级传动减速机的转动惯量，请咨询我司技术部门。

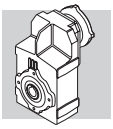

63 精确速比

i_N	F 10	F 20	F 25	F 31	F 41	F 51	F 60	F 70	F 80	F 90
6.3		6.41210								
7.1	7.40443		6.86957	6.94907	6.72727	7.19408				
8.0		7.83478	8.39375	8.22917						
9.0	8.58204	8.73227	9.35526	9.01630	9.13580	9.05114	8.96000			
10.0	9.76974	10.03069	10.62451	10.74747			9.70667	10.01538	10.33846	10.26577
11.2	11.53759	11.23370			10.77273	11.11005	11.75320	10.85000	11.20000	11.12125
12.5	13.02632		12.98182	12.72727		13.97796	12.73263	12.81731	12.90240	13.41346
14.0	14.64777	14.79842	14.46890	13.94466	14.62963		14.47385	13.88542	13.97760	14.53125
16.0	16.97738		16.62032	16.80000	17.11667		15.68000	16.34455	16.24615	16.52538
18.0		18.08182	18.61364	18.48804	18.89130	18.82155	19.06872	17.70660	17.60000	17.90250
20.0	19.32692	20.15311	21.81818	21.11230			20.65778	20.86538	20.33231	20.56731
22.4	22.82418	23.14973	23.75758	23.38636		23.79447	23.46381	22.60417	22.02667	22.28125
25.0	25.76923	25.92614	27.20455	27.27273	24.11579		25.41913	24.55695	25.22585	25.38622
28.0	29.63462	30.38961	30.03636	30.12121	30.11875	30.03828	29.61538	27.69231	28.84615	28.61169
31.5	32.98462	33.09091	32.18182	34.36364			32.08333	30.00000	31.25000	30.99600
35.5	35.34066	37.89205	36.41958	37.67273	38.18333	37.13636	38.84771	35.43956	36.00000	37.38462
40.0	39.64497	41.83636	40.72727	40.36364			42.08502	38.39286	39.00000	40.50000
45.0	44.66667	44.82468	45.56607	44.64336	47.92667		47.84024	45.19231	45.32967	46.05785
50.0	48.72727	50.72727	50.78571	47.54630	51.49270	48.89965	51.82692	48.95833	49.10714	49.89600
56.0	56.69231	56.72727	58.33718	52.09420	60.24646		63.02761	57.69231	56.73077	57.32308
63.0	62.99145	61.88430	65.33371	62.76111	66.49275	65.84416	68.27991	62.50000	61.45833	62.10000
71.0	71.12308	69.13636	76.58163	69.06725			77.55467	73.55769	70.38462	70.75385
80.0	81.31624	76.81818	83.38889	78.87092	84.88166	83.24111	84.01756	85.38462	76.25000	76.65000
90.0	91.48077	90.40909	95.48772	87.36632			98.19838	92.50000	92.30769	88.39385
100.0	106.02198	101.63636	105.42738	101.88492	106.01061	105.08407	106.38158	101.18343	105.00000	103.33491
112.2		114.34091	112.95791	112.52623			120.45488	109.61538	113.75000	111.94615
125.5	127.12821	132.19481	127.83242	128.37500	134.39596	129.91558	130.49279	122.72727	122.48521	126.77538
140.0		156.30469	142.95238	140.73704			150.35503	132.95455	132.69231	150.30533
160.0		172.57500	155.94805	166.77778	168.69010	165.62338	162.88462	166.66667	160.22727	162.83077
180.0		184.90179	174.22321	185.43056	180.73939	202.39481	185.89349	180.94406	184.61538	179.21958
200.0		209.25000	193.58135	202.28788	198.92028	216.85158	201.38462	196.02273	200.00000	194.15455
225.0		234.00000	227.83036	228.22222	220.13131	239.84416	217.64679	216.52422	218.49174	213.59178
250.0		255.27273	256.12302	253.58025	240.14325	262.11039	259.08284	234.56790	273.89277	231.39109
280.0		285.18750	288.13839	293.83611	266.93818	285.93861	280.67308	280.93645	296.71717	268.72770
315.0		316.87500	333.13010	332.82407	296.59798	317.26753	315.38899	304.34783	353.67893	291.12168
355.0		372.93750		374.42708	344.79515	352.51948	341.67140	372.46964	383.15217	361.84615
400.0		419.25000	393.88686	418.86023		429.09330	399.34008	403.50877	451.49061	392.00000
450.0		471.65625	434.88795	462.60785	433.67975		432.61842	471.15385	489.11483	457.45099
500.0			465.95137	527.76389			489.84985	510.41667	563.87675	495.57191
560.0		545.30357	527.30872	578.58560	549.80165	530.48864	530.67067	606.83761	610.86648	577.48888
630.0			589.67857	619.91314	690.09587	676.29545	611.44379	657.40741	714.86014	625.61296
710.0			643.28571	685.64198	739.38843	826.44545	755.96686	758.97436	774.43182	713.95030
800.0			718.67076	762.32562	813.76478	885.47727	818.96410	822.22222	897.27273	773.44615
900.0			798.52307	831.62795	900.53719	979.36364	885.09695	899.40828	972.04545	910.18225
1000.0			939.80022	938.24691	982.40421	1070.28409	958.85503	974.35897	1058.06885	986.03077
1125.0			1056.50744	1042.49657	1092.01983	1167.58264	1053.60355	1090.90909	1146.24126	1112.25941
1250.0			1188.57087	1207.99290	1213.35537	1295.50909	1141.40385	1181.81818	1277.33630	1204.94769
1400.0			1374.16167	1368.27675	1410.52562	1439.45455		1367.52137	1383.78099	1427.90059
1600.0				1539.31134				1584.61538	1577.62238	1571.37386
1800.0								1716.66667	1709.09091	1702.32168
2000.0								2019.23077	1833.98601	1937.26864
2250.0								2187.50000	1986.81818	2098.70769

2x 3x 4x

F 10...M/ME/MX

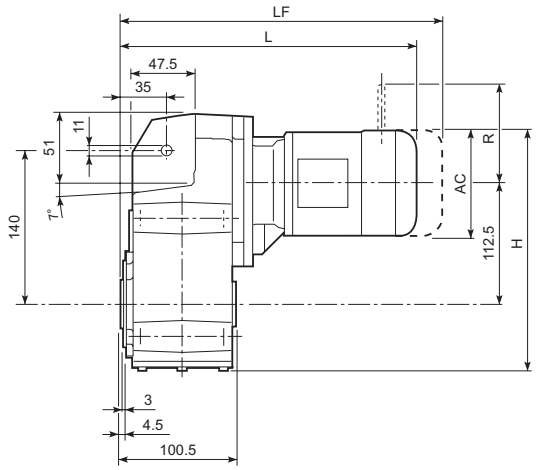

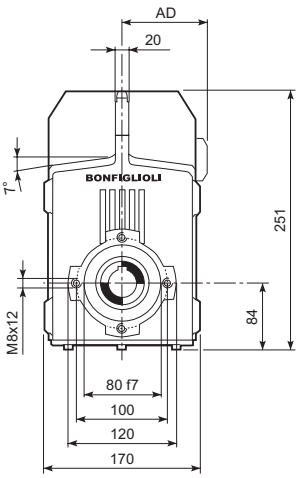

								M...FD M...FA		M...FD		M...FA	
			AC	H	L	AD	Kg	LF	Kg	R	AD	R	AD
F 10 2	**S05**	**M05**	121	220.5	311.5	95	12	377.5	13	96	122	116	95
F 10 2	**S1**	**M1**	138	265.5	340.5	108	14	401.5	17	103	135	124	108
F 10 2	**S2**	**ME2S**	156	274.5	369.5	119	18	—	—	—	—	—	—
F 10 2	**S2**	**MX2S**	156	274.5	413.5	119	23	—	—	—	—	—	—
F 10 2	**S3**	**ME3S**	195	294	412.5	142	22	—	—	—	—	—	—
F 10 2	**S3**	**MX3S**	195	294	444.5	142	25	—	—	—	—	—	—
F 10 2	**S3**	**ME3L**	195	294	444.5	142	24	—	—	—	—	—	—
F 10 2	**S3**	**MX3L**	195	294	488.5	142	30	—	—	—	—	—	—

F 10...P(IEC)

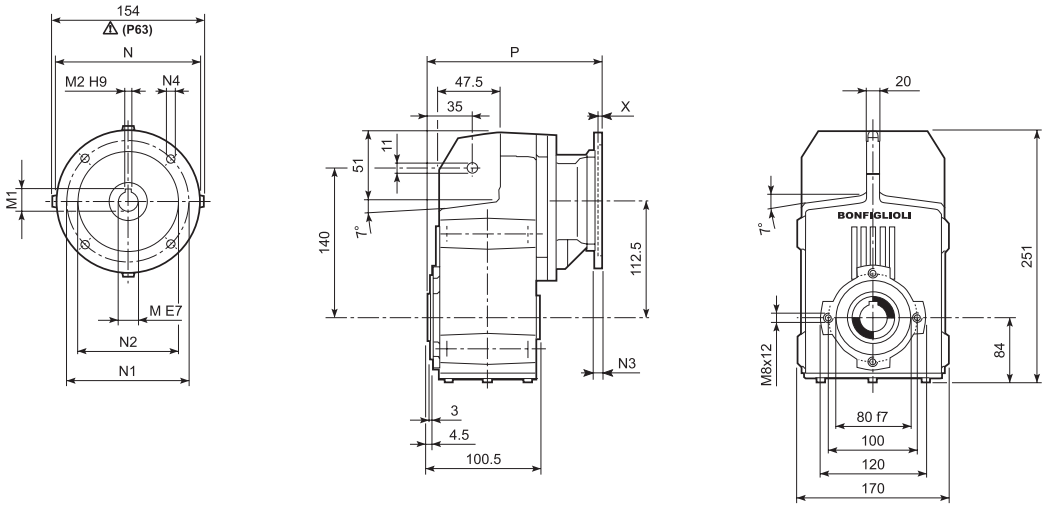

		M	M1	M2	N	N1	N2	N3	N4	X	P	Kg
F 10 2	**P63**	11	12.8	4	140	115	95	—	M8x19	4	185.5	8
F 10 2	**P71**	14	16.3	5	160	130	110	—	M8x16	4.5	185.5	8
F 10 2	**P80**	19	21.8	6	200	165	130	—	M10x14.5	4	205	9
F 10 2	**P90**	24	27.3	8	200	165	130	—	M10x14.5	4	205	9
F 10 2	**P100**	28	31.3	8	250	215	180	—	M12x16	4.5	215	13
F 10 2	**P112**	28	31.3	8	250	215	180	—	M12x16	4.5	215	13

F 10...HS

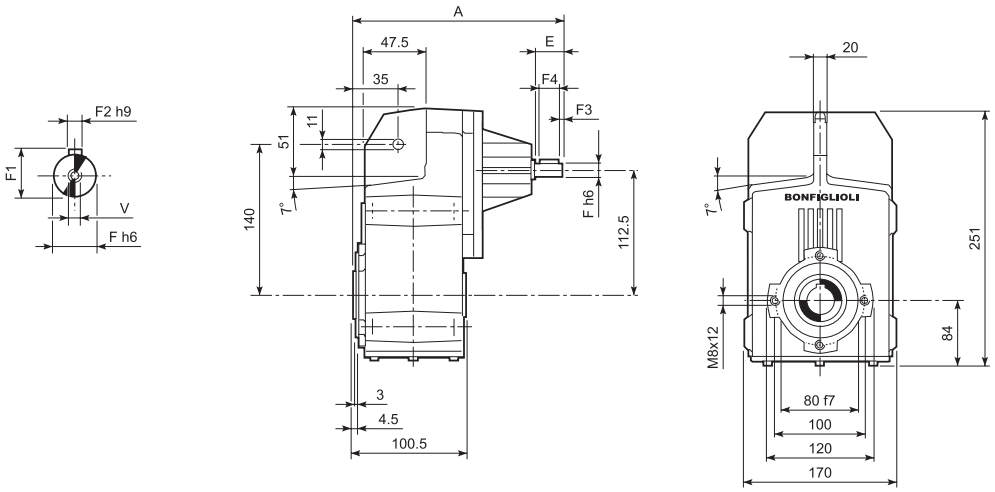

		A	E	F	F1	F2	F3	F4	V	Kg
F 10 2	**HS**	192	40	16	18	5	2.5	35	M6x16	7.5

F 10...SK / SC

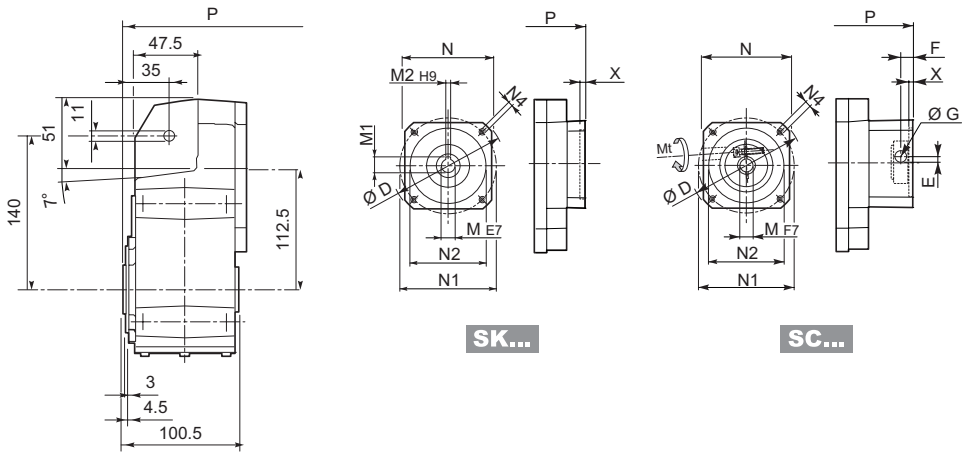

		D	M	M1	M2	N	N1	N2	N4	X	P	Kg
F 10 2	**SK 60A**	102	11	12.8	4	82	75	60	M5x10	3.5	157	8
F 10 2	**SK 60B**	102	14	16.3	5	82	75	60	M5x10	4	164	8
F 10 2	**SK 80A**	115	14	16.3	5	90	100	80	M6x12	4	164	8
F 10 2	**SK 80C**	120	19	21.8	6	96	100	80	M6x12	4	205	9
F 10 2	**SK 95A**	130	14	16.3	5	102	115	95	M8x12	4	205	9
F 10 2	**SK 95B**	130	19	21.8	6	102	115	95	M8x12	4	205	9
F 10 2	**SK 95C**	130	24	27.3	8	102	115	95	M8x12	4	205	9
F 10 2	**SK 110A**	150	19	21.8	6	120	130	110	M8x12	5	205	9
F 10 2	**SK 110B**	150	24	27.3	8	120	130	110	M8x12	5	205	9

			Mt [Nm]	D	E	F	G	M	N	N1	N2	N4	X	P	Kg
F 10 2	**SC 60A**	M6	15	102	7	12.5	12.5	11	82	75	60	M5x10	4	184	8
F 10 2	**SC 60B**	M6	15	102	7	12.5	12.5	14	82	75	60	M5x10	4	184	9
F 10 2	**SC 80A**	M6	15	115	6	12.5	12.5	14	90	100	80	M6x12	4	184	9
F 10 2	**SC 80C**	M6	15	120	15.5	14.5	17.75	19	96	100	80	M6x12	4	228.5	10
F 10 2	**SC 95A**	M6	15	130	16.5	15	17.75	14	102	115	95	M8x16	4	228.5	10
F 10 2	**SC 95B**	M6	15	130	16.5	15	17.75	19	102	115	95	M8x16	4	228.5	10
F 10 2	**SC 95C**	M6	15	130	16.5	15	17.75	24	102	115	95	M8x16	4	228.5	10
F 10 2	**SC 110A**	M6	15	150	16.5	16	17.75	19	120	130	110	M8x16	5	228.5	11
F 10 2	**SC 110B**	M6	15	150	16.5	16	17.75	24	120	130	110	M8x16	5	228.5	11

F 10...H

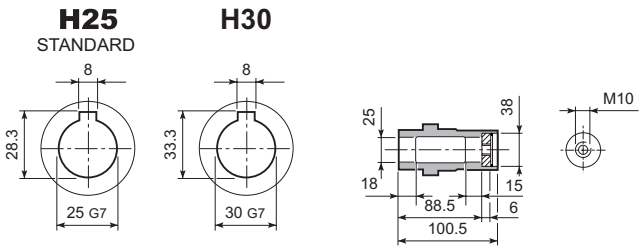

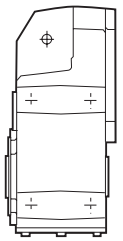

F 10...S

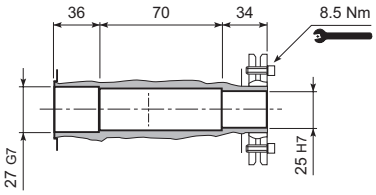

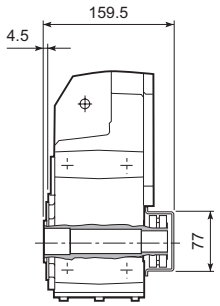

F 10...R

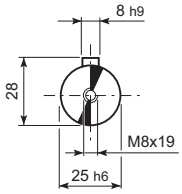

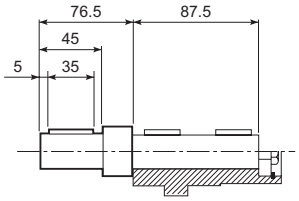

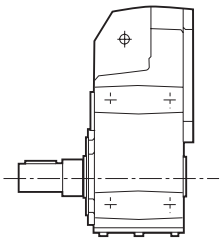

F 10...QF

	Ø
QF25	25
QF30	30

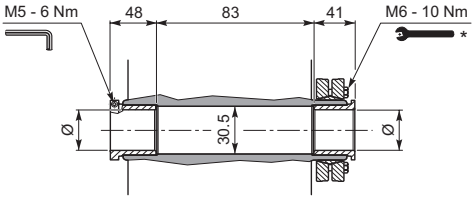

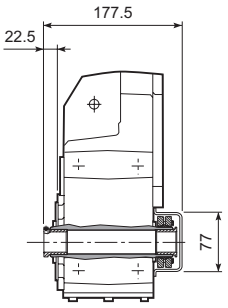

F 10...F...

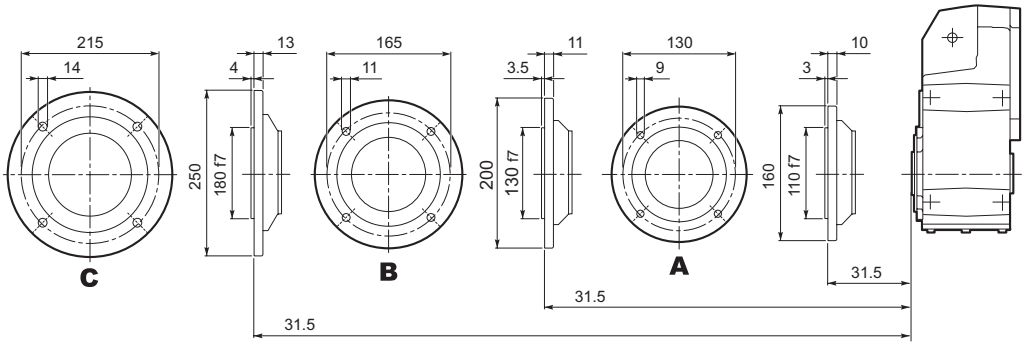

详细安装指南见随机文件

F 20...M/ME/MX

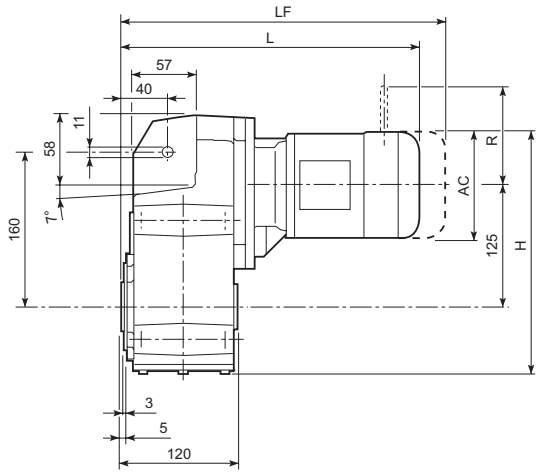

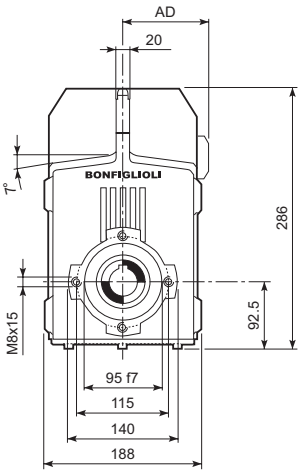

								M...FD M...FA		M...FD		M...FA	
			AC	H	L	AD	Kg	LF	Kg	R	AD	R	AD
F 20 2	**S05**	**M05**	121	278.2	323.5	95	15	389.5	17	96	122	116	95
F 20 2	**S1**	**M1**	138	286.7	352.5	108	17	413.5	20	103	135	124	108
F 20 2	**S2**	**ME2S**	156	295.7	381.5	119	21	—	—	—	—	—	—
F 20 2	**S2**	**MX2S**	156	295.7	425.5	119	26	—	—	—	—	—	—
F 20 2	**S3**	**ME3S**	195	315.2	424.5	142	26	—	—	—	—	—	—
F 20 2	**S3**	**MX3S**	195	315.2	456.5	142	29	—	—	—	—	—	—
F 20 2	**S3**	**ME3L**	195	315.2	456.5	142	33	—	—	—	—	—	—
F 20 2	**S3**	**MX3L**	195	315.2	500.5	142	39	—	—	—	—	—	—
F 20 3	**S05**	**M05**	121	278.2	379	95	17	445	18	96	122	116	95
F 20 3	**S1**	**M1**	138	286.7	408	108	19	469	21	103	135	124	108
F 20 3	**S2**	**ME2S**	156	295.7	437	119	22	—	—	—	—	—	—
F 20 3	**S2**	**MX2S**	156	295.7	481	119	27	—	—	—	—	—	—
F 20 3	**S3**	**ME3S**	195	315.2	480	142	27	—	—	—	—	—	—
F 20 3	**S3**	**MX3S**	195	315.2	512	142	30	—	—	—	—	—	—
F 20 3	**S3**	**ME3L**	195	315.2	512	142	34	—	—	—	—	—	—
F 20 3	**S3**	**MX3L**	195	315.2	556	142	40	—	—	—	—	—	—

F 20...P(IEC)

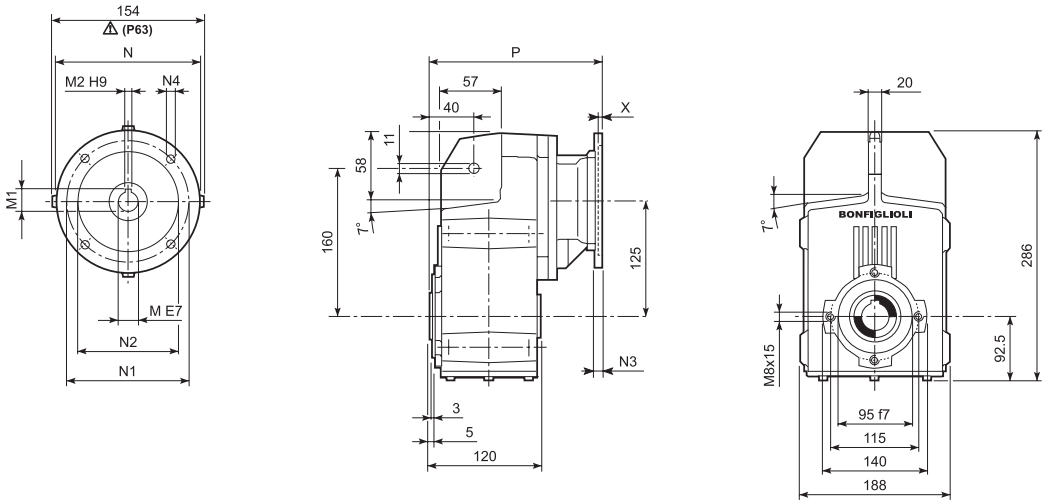

		M	M1	M2	N	N1	N2	N3	N4	X	P	Kg
F 20 2	**P63**	11	12.8	4	140	115	95	—	M8x19	4	197.5	12
F 20 2	**P71**	14	16.3	5	160	130	110	—	M8x16	4.5	197.5	12
F 20 2	**P80**	19	21.8	6	200	165	130	—	M10x14.5	4	217	13
F 20 2	**P90**	24	27.3	8	200	165	130	—	M10x14.5	4	217	12
F 20 2	**P100**	28	31.3	8	250	215	180	—	M12x16	4.5	227	16
F 20 2	**P112**	28	31.3	8	250	215	180	—	M12x16	4.5	227	16
F 20 3	**P63**	11	12.8	4	140	115	95	—	M8x19	4	253	13
F 20 3	**P71**	14	16.3	5	160	130	110	—	M8x16	4.5	253	13
F 20 3	**P80**	19	21.8	6	200	165	130	—	M10x14.5	4	272.5	14
F 20 3	**P90**	24	27.3	8	200	165	130	—	M10x14.5	4	272.5	14
F 20 3	**P100**	28	31.3	8	250	215	180	—	M12x16	4.5	282.5	18
F 20 3	**P112**	28	31.3	8	250	215	180	—	M12x16	4.5	282.5	18

F 20...HS

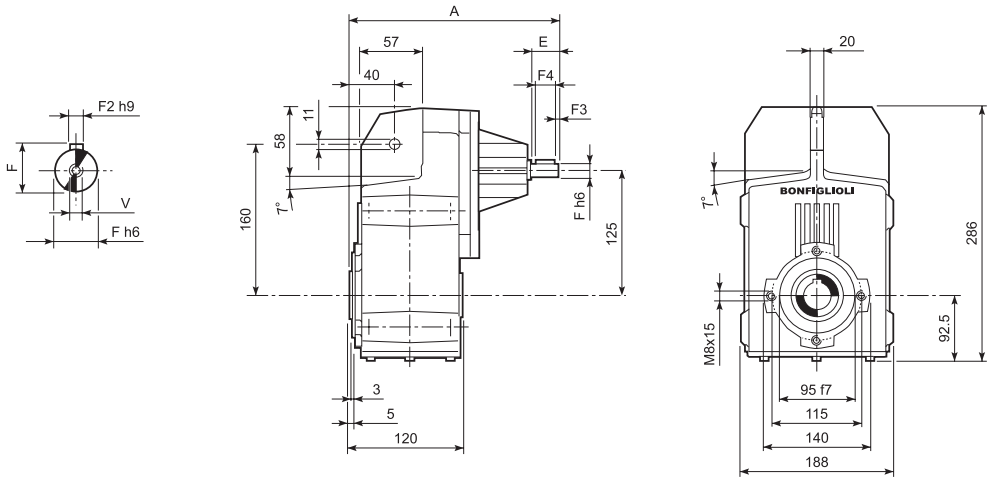

		A	E	F	F1	F2	F3	F4	V	Kg
F 20 2	**HS**	247.5	40	19	21.5	6	2.5	35	M6x16	11.5
F 20 3		260	40	16	18	5	2.5	35	M6x16	12.4

F 20...SK / SC

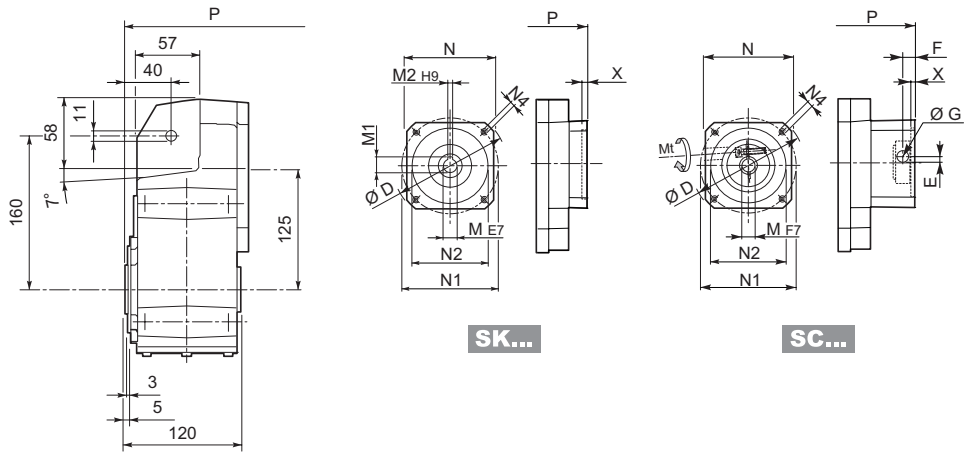

											2x		3x	
		D	M	M1	M2	N	N1	N2	N4	X	P	Kg	P	Kg
F 20 2/3	SK 60A	102	11	12.8	4	82	75	60	M5x10	3.5	169	11	224.5	12
F 20 2/3	SK 60B	102	14	16.3	5	82	75	60	M5x10	4	176	12	231.5	13
F 20 2/3	SK 80A	115	14	16.3	5	90	100	80	M6x12	4	217	12	231.5	13
F 20 2/3	SK 80C	120	19	21.8	6	96	100	80	M6x12	4	217	13	272.5	14
F 20 2/3	SK 95A	130	14	16.3	5	102	115	95	M8x12	4	217	13	272.5	14
F 20 2/3	SK 95B	130	19	21.8	6	102	115	95	M8x12	4	217	13	272.5	14
F 20 2/3	SK 95C	130	24	27.3	8	102	115	95	M8x12	4	217	13	272.5	14
F 20 2/3	SK 110A	150	19	21.8	6	120	130	110	M8x12	5	217	13	272.5	14
F 20 2/3	SK 110B	150	24	27.3	8	120	130	110	M8x12	5	217	13	272.5	14

														2x		3x	
			Mt [Nm]	D	E	F	G	M	N	N1	N2	N4	X	P	Kg	P	Kg
F 20 2/3	SC 60A	M6	15	102	7	12.5	12.5	11	82	75	60	M5x10	4	196	12	251.5	13
F 20 2/3	SC 60B	M6	15	102	7	12.5	12.5	14	82	75	60	M5x10	4	196	13	251.5	14
F 20 2/3	SC 80A	M6	15	115	6	12.5	12.5	14	90	100	80	M6x12	4	196	13	251.5	14
F 20 2/3	SC 80C	M6	15	120	15.5	14.5	17.75	19	96	100	80	M6x12	4	240.5	14	296	15
F 20 2/3	SC 95A	M6	15	130	16.5	15	17.75	14	102	115	95	M8x16	4	240.5	14	296	15
F 20 2/3	SC 95B	M6	15	130	16.5	15	17.75	19	102	115	95	M8x16	4	240.5	14	296	15
F 20 2/3	SC 95C	M6	15	130	16.5	15	17.75	24	102	115	95	M8x16	4	240.5	14	296	15
F 20 2/3	SC 110A	M6	15	150	16.5	16	17.75	19	120	130	110	M8x16	5	240.5	15	296	16
F 20 2/3	SC 110B	M6	15	150	16.5	16	17.75	24	120	130	110	M8x16	5	240.5	15	296	16

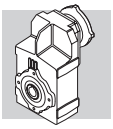

F 20

F 20...H

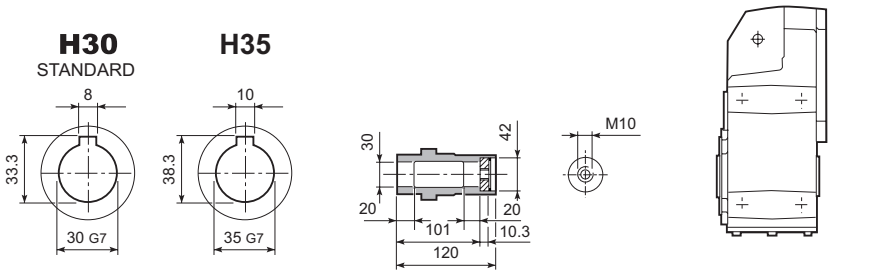

F 20...S

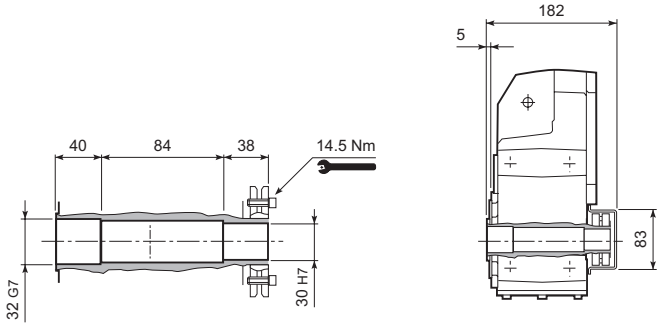

F 20...R

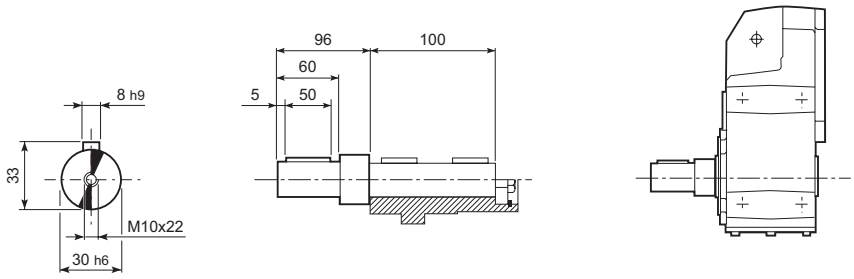

F 20...QF

	Ø
QF25	25
QF30	30

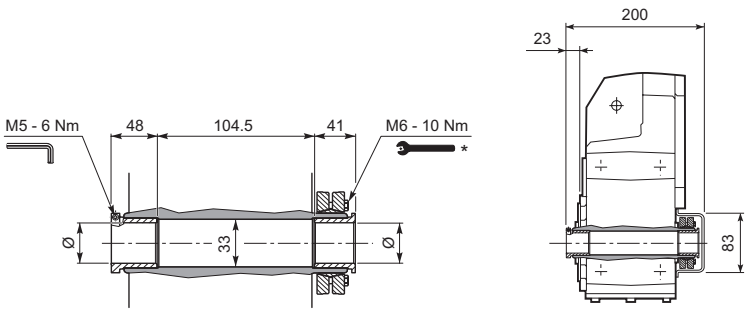

F 20...F...

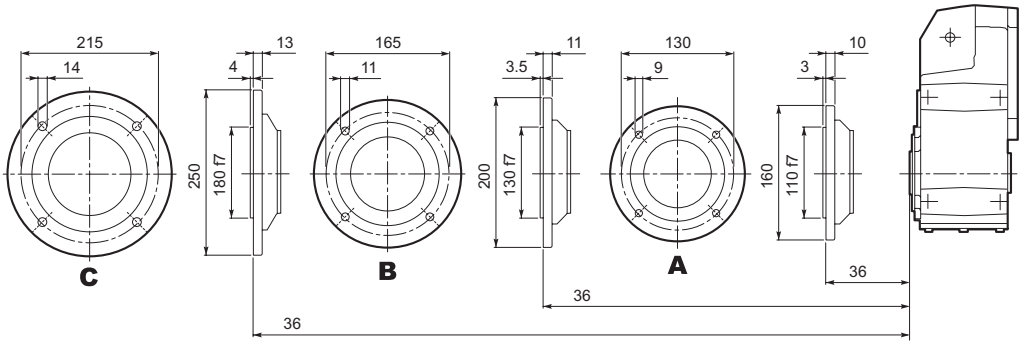

详细安装指南见随机文件

F 25...M/ME/MX

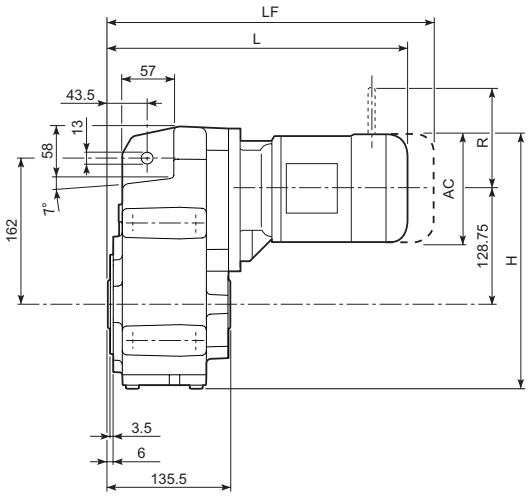

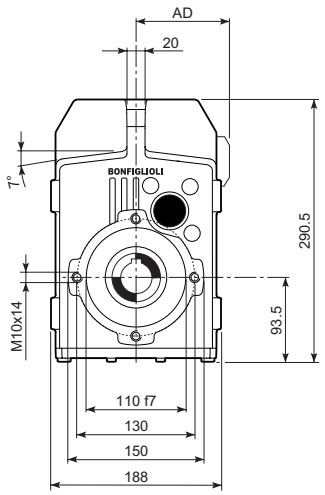

								M...FD M...FA		M...FD		M...FA	
			AC	H	L	AD	Kg	LF	Kg	R	AD	R	AD
F 25 2/3	**S05**	**M05**	121	283	339	95	15	405	17	96	122	116	95
F 25 2/3	**S1**	**M1**	138	291.5	368	108	17	429	20	103	135	124	108
F 25 2/3	**S2**	**ME2S**	156	300.5	397	119	21	—	—	—	—	—	—
F 25 2/3	**S2**	**MX2S**	156	300.5	441	119	26	—	—	—	—	—	—
F 25 2/3	**S3**	**ME3S**	195	320	440	142	26	—	—	—	—	—	—
F 25 2/3	**S3**	**MX3S**	195	320	472	142	29	—	—	—	—	—	—
F 25 2/3	**S3**	**ME3L**	195	320	472	142	33	—	—	—	—	—	—
F 25 2/3	**S3**	**MX3L**	195	320	516	142	39	—	—	—	—	—	—
F 25 4	**S05**	**M05**	121	283	394.5	95	17	460.5	18	96	122	116	95
F 25 4	**S1**	**M1**	138	291.5	423.5	108	19	484.5	21	103	135	124	108
F 25 4	**S2**	**ME2S**	156	300.5	452.5	119	22	—	—	—	—	—	—
F 25 4	**S2**	**MX2S**	156	300.5	496.5	119	27	—	—	—	—	—	—
F 25 4	**S3**	**ME3S**	195	320	495.5	142	27	—	—	—	—	—	—
F 25 4	**S3**	**MX3S**	195	320	527.5	142	30	—	—	—	—	—	—
F 25 4	**S3**	**ME3L**	195	320	527.5	142	34	—	—	—	—	—	—
F 25 4	**S3**	**MX3L**	195	320	571.5	142	40	—	—	—	—	—	—

F 25...P(IEC)

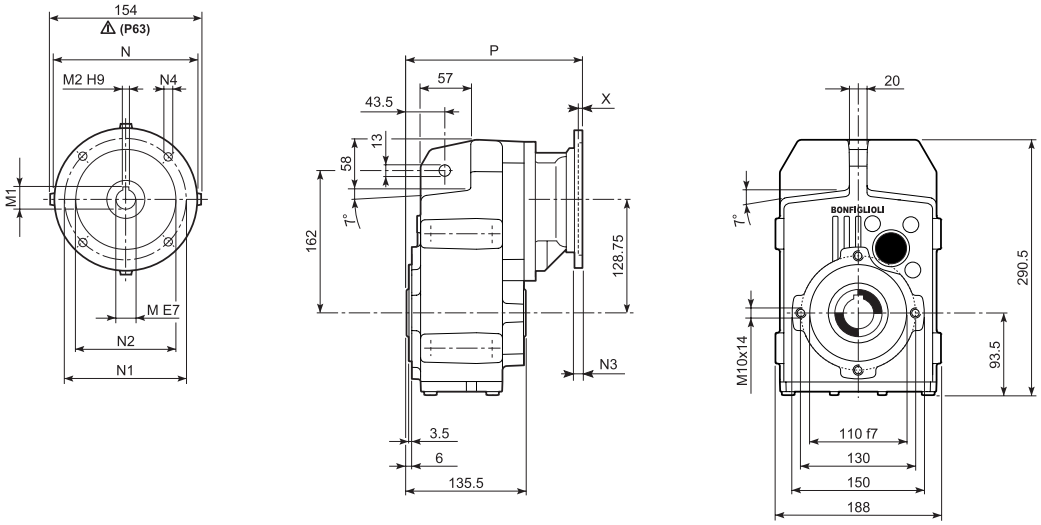

		M	M1	M2	N	N1	N2	N3	N4	X	P	Kg
F 25 2/3	**P63**	11	12.8	4	140	115	95	—	M8x19	4	213	12
F 25 2/3	**P71**	14	16.3	5	160	130	110	—	M8x16	4.5	213	12
F 25 2/3	**P80**	19	21.8	6	200	165	130	—	M10x14.5	4	232.5	13
F 25 2/3	**P90**	24	27.3	8	200	165	130	—	M10x14.5	4	232.5	13
F 25 2/3	**P100**	28	31.3	8	250	215	180	—	M12x16	4.5	242.5	16
F 25 2/3	**P112**	28	31.3	8	250	215	180	—	M12x16	4.5	242.5	16
F 25 4	**P63**	11	12.8	4	140	115	95	—	M8x19	4	268.5	13
F 25 4	**P71**	14	16.3	5	160	130	110	—	M8x16	4.5	268.5	13
F 25 4	**P80**	19	21.8	6	200	165	130	—	M10x14.5	4	288	14
F 25 4	**P90**	24	27.3	8	200	165	130	—	M10x14.5	4	288	14
F 25 4	**P100**	28	31.3	8	250	215	180	—	M12x16	4.5	298	18
F 25 4	**P112**	28	31.3	8	250	215	180	—	M12x16	4.5	298	18

F 25...HS

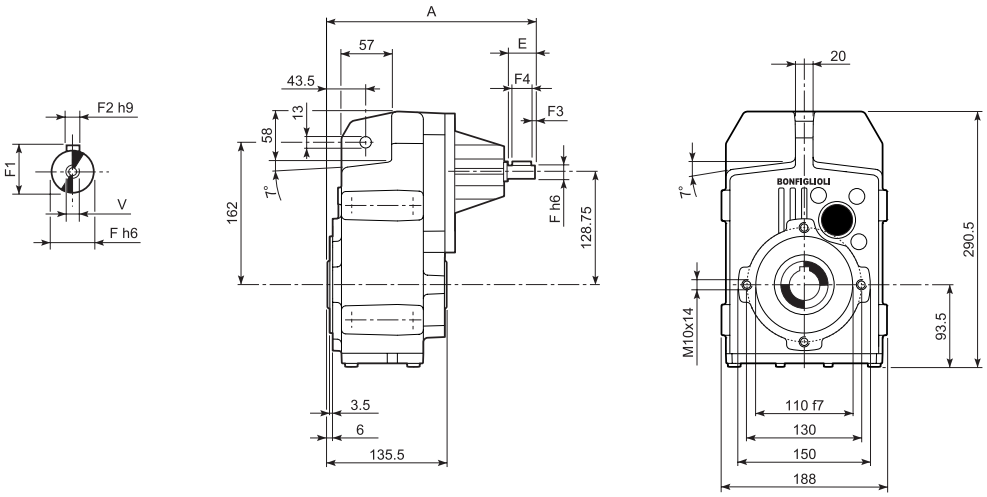

		A	E	F	F1	F2	F3	F4	V	Kg
F 25 2	**HS**	263	40	19	21.5	6	2.5	35	M6x16	11.5
F 25 3		263	40	19	21.5	6	2.5	35	M6x16	11.5
F 25 4		275.5	40	16	18	5	2.5	35	M6x16	12.5

F 25...SK / SC

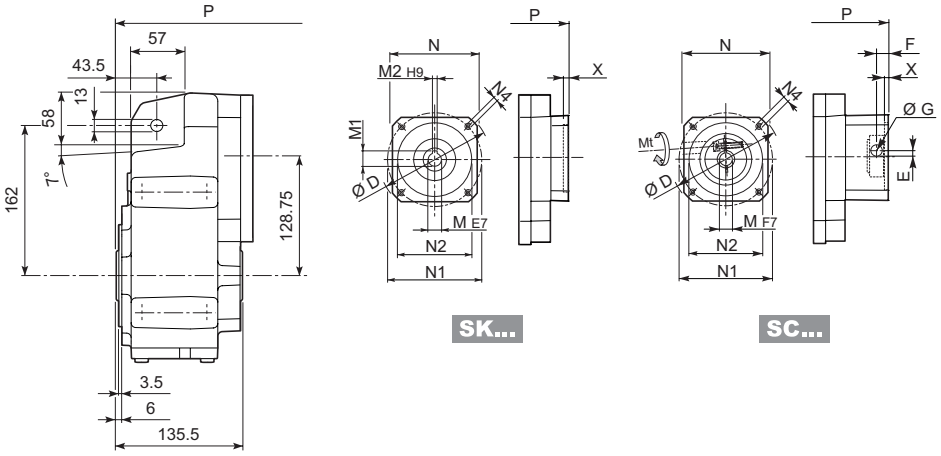

											2/3x		4x	
		D	M	M1	M2	N	N1	N2	N4	X	P	Kg	P	Kg
F 25 2/3/4	**SK 60A**	102	11	12.8	4	82	75	60	M5x10	3.5	184.5	11	240	12
F 25 2/3/4	**SK 60B**	102	14	16.3	5	82	75	60	M5x10	4	191.5	12	247	13
F 25 2/3/4	**SK 80A**	115	14	16.3	5	90	100	80	M6x12	4	191.5	12	247	13
F 25 2/3/4	**SK 80C**	120	19	21.8	6	96	100	80	M6x12	4	232.5	13	288	14
F 25 2/3/4	**SK 95A**	130	14	16.3	5	102	115	95	M8x12	4	232.5	13	288	14
F 25 2/3/4	**SK 95B**	130	19	21.8	6	102	115	95	M8x12	4	232.5	13	288	14
F 25 2/3/4	**SK 95C**	130	24	27.3	8	102	115	95	M8x12	4	232.5	13	288	14
F 25 2/3/4	**SK 110A**	150	19	21.8	6	120	130	110	M8x12	5	232.5	13	288	14
F 25 2/3/4	**SK 110B**	150	24	27.3	8	120	130	110	M8x12	5	232.5	13	288	14

														2/3x		4x	
			Mt [Nm]	D	E	F	G	M	N	N1	N2	N4	X	P	Kg	P	Kg
F 25 2/3/4	**SC 60A**	M6	15	102	7	12.5	12.5	11	82	75	60	M5x10	4	211.5	12	267	13
F 25 2/3/4	**SC 60B**	M6	15	102	7	12.5	12.5	14	82	75	60	M5x10	4	211.5	13	267	14
F 25 2/3/4	**SC 80A**	M6	15	115	6	12.5	12.5	14	90	100	80	M6x12	4	211.5	13	267	14
F 25 2/3/4	**SC 80C**	M6	15	120	15.5	14.5	17.75	19	96	100	80	M6x12	4	256	14	311.5	15
F 25 2/3/4	**SC 95A**	M6	15	130	16.5	15	17.75	14	102	115	95	M8x16	4	256	14	311.5	15
F 25 2/3/4	**SC 95B**	M6	15	130	16.5	15	17.75	19	102	115	95	M8x16	4	256	14	311.5	15
F 25 2/3/4	**SC 95C**	M6	15	130	16.5	15	17.75	24	102	115	95	M8x16	4	256	14	311.5	15
F 25 2/3/4	**SC 110A**	M6	15	150	16.5	16	17.75	19	120	130	110	M8x16	5	256	15	311.5	16
F 25 2/3/4	**SC 110B**	M6	15	150	16.5	16	17.75	24	120	130	110	M8x16	5	256	15	311.5	16

F 25

F 25...H

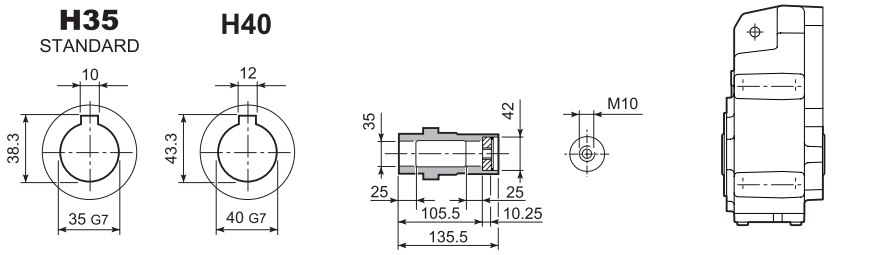

F 25...S

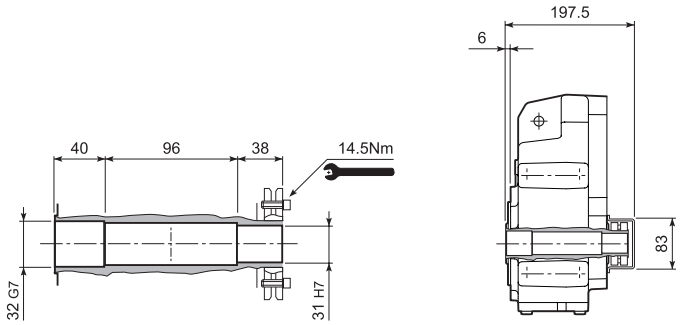

F 25...R

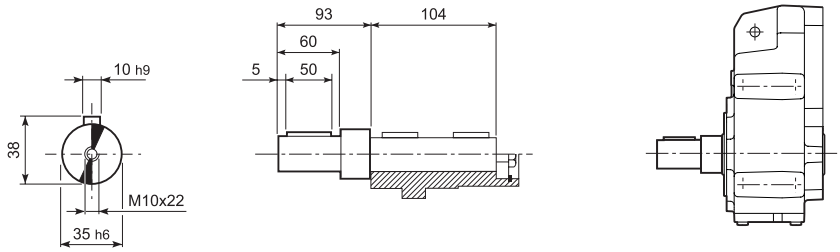

F 25...QF

	Ø
QF30	30
QF32	32

$M_{n2\ max}$ [Nm]	
F 25 QF30	350

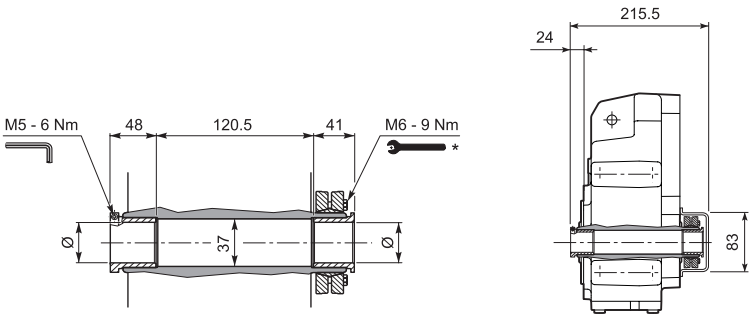

F 25...F...

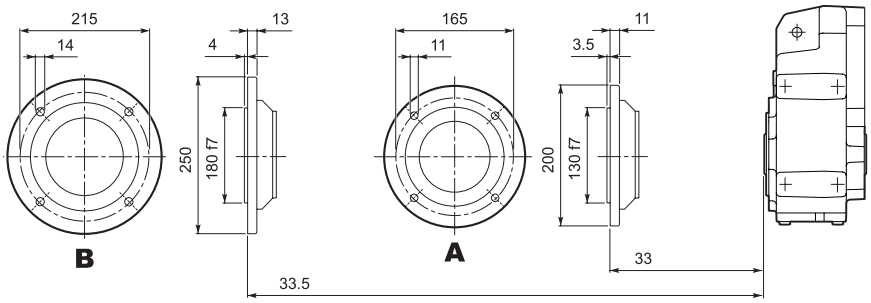

详细安装指南见随机文件

F 31...M/ME/MX

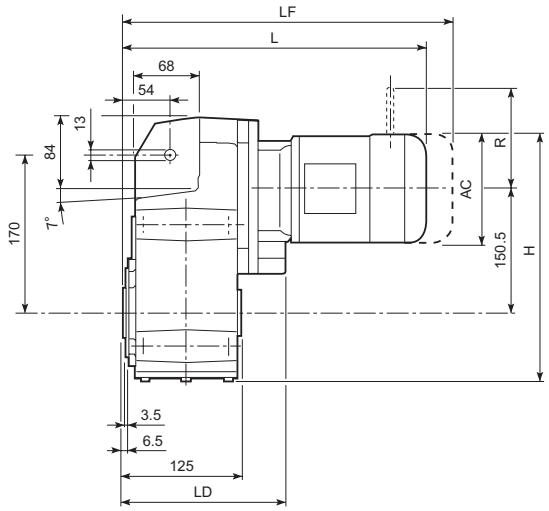

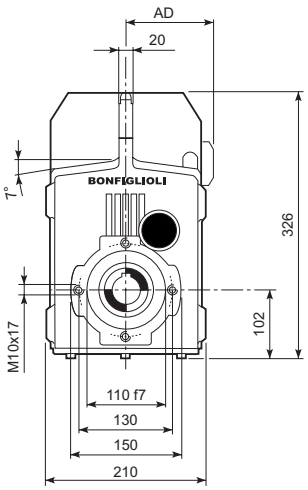

										M...FD M...FA		M...FD		M...FA	
				AC	H	L	LD	AD	Kg	LF	Kg	R	AD	R	AD
F 31 2/3	**S1**	**M1**		138	321.3	380.5	183.5	108	22	441.5	25	103	135	124	108
F 31 2/3	**S2**	**ME2S**		156	330.3	409.5	195.5	119	26	—	—	—	—	—	—
F 31 2/3	**S2**	**MX2S**		156	330.3	453.5	195.5	119	31	—	—	—	—	—	—
F 31 2/3	**S3**	**ME3S**		195	349.8	452.5	205.5	142	31	—	—	—	—	—	—
F 31 2/3	**S3**	**MX3S**		195	349.8	484.5	205.5	142	34	—	—	—	—	—	—
F 31 2/3	**S3**	**ME3L**		195	349.8	484.5	205.5	142	40	—	—	—	—	—	—
F 31 2/3	**S3**	**MX3L**		195	349.8	528.5	205.5	142	46	—	—	—	—	—	—
F 31 2/3	**S4**	**ME4**	**MX4**	258	381.3	592.5	—	193	72	—	—	—	—	—	—
F 31 2/3	**S4**	**ME4LA**	**MX4LA**	258	381.3	592.5	—	193	78	—	—	—	—	—	—
F 31 4	**S05**	**M05**		121	312.8	409	—	95	20	475	22	96	122	116	95
F 31 4	**S1**	**M1**		138	321.3	438	—	108	22	499	25	103	135	124	108
F 31 4	**S2**	**ME2S**		156	330.3	467	—	119	26	—	—	—	—	—	—
F 31 4	**S2**	**MX2S**		156	330.3	511	—	119	31	—	—	—	—	—	—
F 31 4	**S3**	**ME3S**		195	349.8	510	—	142	31	—	—	—	—	—	—
F 31 4	**S3**	**MX3S**		195	349.8	542	—	142	34	—	—	—	—	—	—
F 31 4	**S3**	**ME3L**		195	349.8	542	—	142	41	—	—	—	—	—	—
F 31 4	**S3**	**MX3L**		195	349.8	586	—	142	47	—	—	—	—	—	—

F 31...P(IEC)

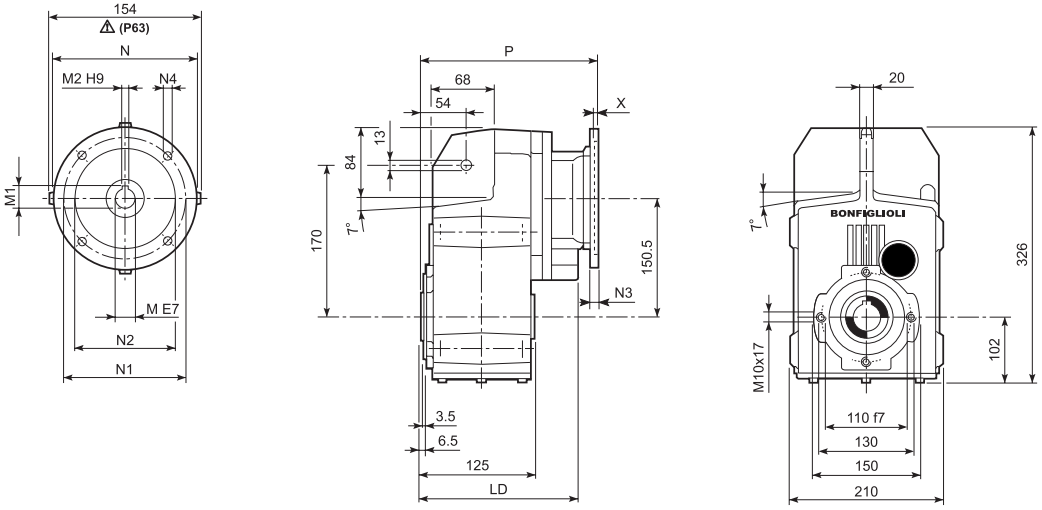

		LD	M	M1	M2	N	N1	N2	N3	N4	X	P	Kg
F 31 2/3	**P63**	195.5	11	12.8	4	140	115	95	—	M8x19	4	225.5	17
F 31 2/3	**P71**	195.5	14	16.3	5	160	130	110	—	M8x16	4.5	225.5	17
F 31 2/3	**P80**	205.5	19	21.8	6	200	165	130	—	M10x14.5	4	245	18
F 31 2/3	**P90**	205.5	24	27.3	8	200	165	130	—	M10x14.5	4	245	17
F 31 2/3	**P100**	205.5	28	31.3	8	250	215	180	—	M12x16	4.5	255	21
F 31 2/3	**P112**	205.5	28	31.3	8	250	215	180	—	M12x16	4.5	255	21
F 31 2/3	**P132**	—	38	41.3	10	300	265	230	—	14	5	291.5	24
F 31 4	**P63**	—	11	12.8	4	140	115	95	—	M8x19	4	283	17
F 31 4	**P71**	—	14	16.3	5	160	130	110	—	M8x16	4.5	283	17
F 31 4	**P80**	—	19	21.8	6	200	165	130	—	M10x14.5	4	302.5	18
F 31 4	**P90**	—	24	27.3	8	200	165	130	—	M10x14.5	4	302.5	18
F 31 4	**P100**	—	28	31.3	8	250	215	180	—	M12x16	4.5	312.5	22
F 31 4	**P112**	—	28	31.3	8	250	215	180	—	M12x16	4.5	312.5	22

F 31...HS

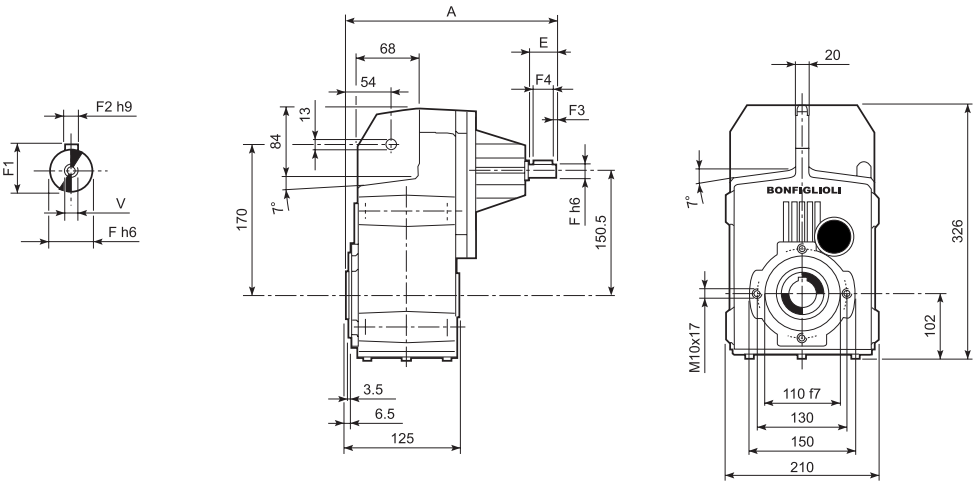

		A	E	F	F1	F2	F3	F4	V	Kg
F 31 2	**HS**	275.5	40	19	21.5	6	2.5	35	M6x16	16.7
F 31 3		275.5	40	19	21.5	6	2.5	35	M6x16	16.7
F 31 4		290	40	16	18	5	2.5	35	M6x16	16.5

F 31...SK / SC

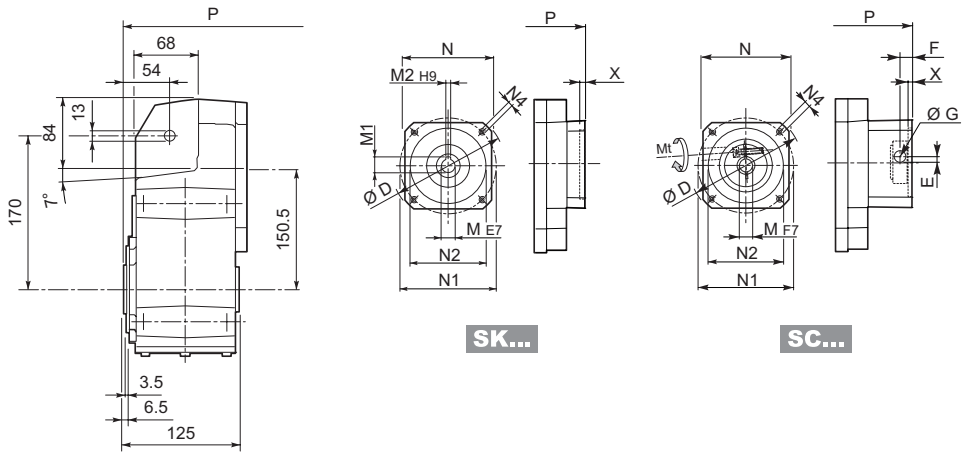

											2/3x		4x	
		D	M	M1	M2	N	N1	N2	N4	X	P	Kg	P	Kg
F 31 2/3/4	**SK 60A**	102	11	12.8	4	82	75	60	M5x10	3.5	197	16	254.5	16
F 31 2/3/4	**SK 60B**	102	14	16.3	5	82	75	60	M5x10	4	204	17	261.5	17
F 31 2/3/4	**SK 80A**	115	14	16.3	5	90	100	80	M6x12	4	204	17	261.5	17
F 31 2/3/4	**SK 80C**	120	19	21.8	6	96	100	80	M6x12	4	245	18	302.5	18
F 31 2/3/4	**SK 95A**	130	14	16.3	5	102	115	95	M8x12	4	245	18	302.5	18
F 31 2/3/4	**SK 95B**	130	19	21.8	6	102	115	95	M8x12	4	245	18	302.5	18
F 31 2/3/4	**SK 95C**	130	24	27.3	8	102	115	95	M8x12	4	245	18	302.5	18
F 31 2/3/4	**SK 110A**	150	19	21.8	6	120	130	110	M8x12	5	245	18	302.5	18
F 31 2/3/4	**SK 110B**	150	24	27.3	8	120	130	110	M8x12	5	245	18	302.5	18
F 31 2/3	**SK 130A**	188	24	27.3	8	142	165	130	M10x20	5	245	18	—	—

														2/3x		4x	
			Mt [Nm]	D	E	F	G	M	N	N1	N2	N4	X	P	Kg	P	Kg
F 31 2/3/4	**SC 60A**	M6	15	102	7	12.5	12.5	11	82	75	60	M5x10	4	224	17	281.5	17
F 31 2/3/4	**SC 60B**	M6	15	102	7	12.5	12.5	14	82	75	60	M5x10	4	224	18	281.5	18
F 31 2/3/4	**SC 80A**	M6	15	115	6	12.5	12.5	14	90	100	80	M6x12	4	224	18	281.5	18
F 31 2/3/4	**SC 80C**	M6	15	120	15.5	14.5	17.75	19	96	100	80	M6x12	4	268.5	19	326	19
F 31 2/3/4	**SC 95A**	M6	15	130	16.5	15	17.75	14	102	115	95	M8x16	4	268.5	19	326	19
F 31 2/3/4	**SC 95B**	M6	15	130	16.5	15	17.75	19	102	115	95	M8x16	4	268.5	19	326	19
F 31 2/3/4	**SC 95C**	M6	15	130	16.5	15	17.75	24	102	115	95	M8x16	4	268.5	19	326	19
F 31 2/3/4	**SC 110A**	M6	15	150	16.5	16	17.75	19	120	130	110	M8x16	5	268.5	20	326	20
F 31 2/3/4	**SC 110B**	M6	15	150	16.5	16	17.75	24	120	130	110	M8x16	5	268.5	20	326	20
F 31 2/3	**SC 130A**	M6	15	188	19	16	17.75	24	142	165	130	M10x20	5	268.5	21	—	—

F 31

F 31...H

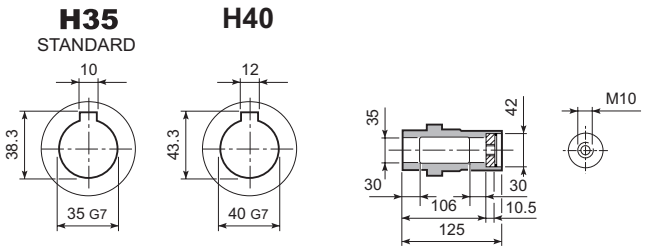

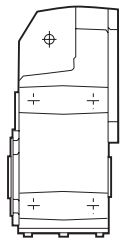

F 31...S

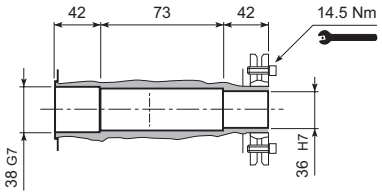

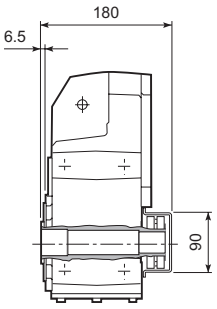

F 31...R

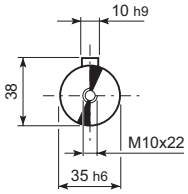

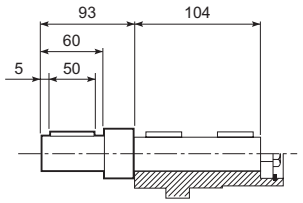

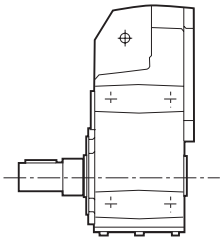

F 31...QF

	Ø
QF35	35
QF40	40

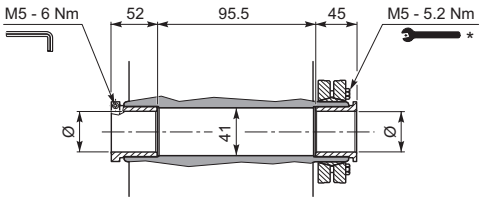

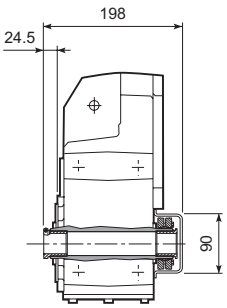

F 31...F...

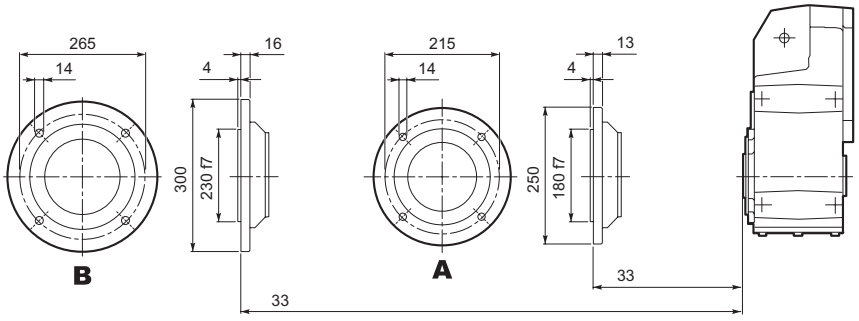

详细安装指南见随机文件

F 41...M/ME/MX

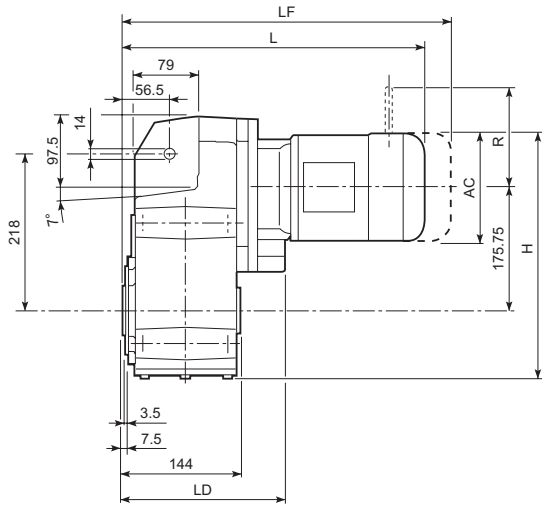

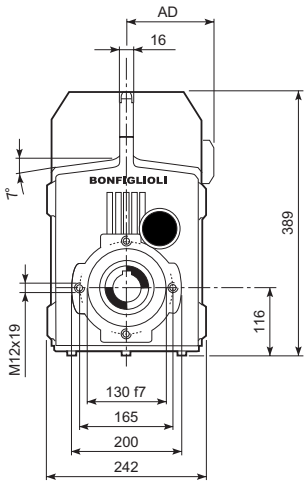

										M...FD M...FA		M...FD		M...FA	
				AC	H	L	LD	AD	Kg	LF	Kg	R	AD	R	AD
F 41 2/3	**S1**	**M1**		138	360.8	401	199.5	108	46	462	48	103	135	124	108
F 41 2/3	**S2**	**ME2S**		156	369.8	430	215	119	49	—	—	—	—	—	—
F 41 2/3	**S2**	**MX2S**		156	369.8	474	215	119	54	—	—	—	—	—	—
F 41 2/3	**S3**	**ME3S**		195	389.3	473	231	142	54	—	—	—	—	—	—
F 41 2/3	**S3**	**MX3S**		195	389.3	505	231	142	57	—	—	—	—	—	—
F 41 2/3	**S3**	**ME3L**		195	389.3	505	231	142	64	—	—	—	—	—	—
F 41 2/3	**S3**	**MX3L**		195	389.3	549	231	142	70	—	—	—	—	—	—
F 41 2/3	**S4**	**ME4**	**MX4**	258	420.8	613	—	193	96	—	—	—	—	—	—
F 41 2/3	**S4**	**ME4LB**	**MX4LA**	258	420.8	648	—	193	104	—	—	—	—	—	—
F 41 4	**S05**	**M05**		231	352.3	433.5	—	95	45	499.5	46	96	122	116	95
F 41 4	**S1**	**M1**		138	360.8	462.5	—	108	47	523.5	49	103	135	124	108
F 41 4	**S2**	**ME2S**		156	369.8	491.5	—	119	50	—	—	—	—	—	—
F 41 4	**S2**	**MX2S**		156	369.8	535.5	—	119	55	—	—	—	—	—	—
F 41 4	**S3**	**ME3S**		195	389.3	534.5	—	142	55	—	—	—	—	—	—
F 41 4	**S3**	**MX3S**		195	389.3	566.5	—	142	58	—	—	—	—	—	—
F 41 4	**S3**	**ME3L**		195	389.3	566.5	—	142	65	—	—	—	—	—	—
F 41 4	**S3**	**MX3L**		195	389.3	610.5	—	142	71	—	—	—	—	—	—

F 41...P(IEC)

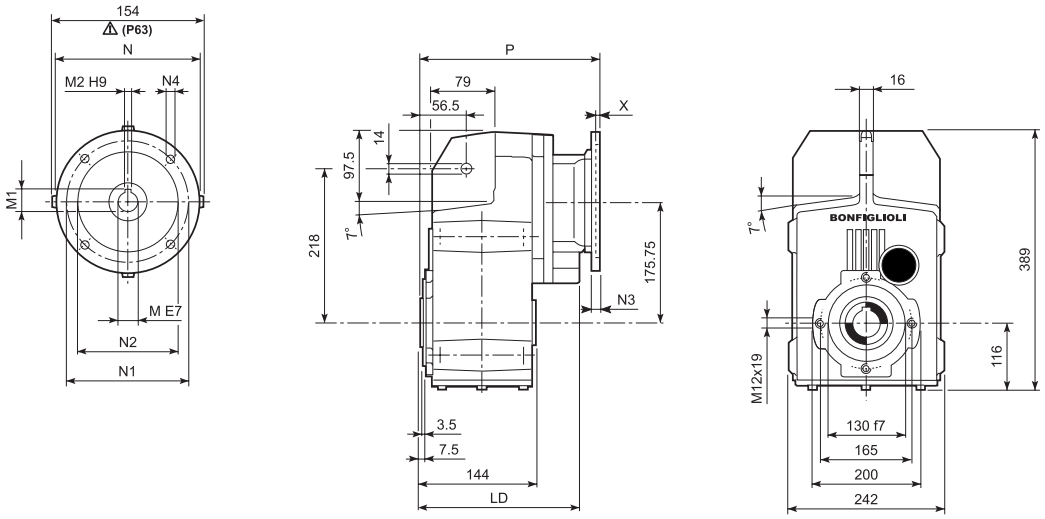

		LD	M	M1	M2	N	N1	N2	N3	N4	X	P	Kg
F 41 2/3	**P63**	215	11	12.8	4	140	115	95	—	M8x19	4	246	42
F 41 2/3	**P71**	215	14	16.3	5	160	130	110	—	M8x16	4.5	246	42
F 41 2/3	**P80**	231	19	21.8	6	200	165	130	—	M10x14.5	4	265.5	43
F 41 2/3	**P90**	231	24	27.3	8	200	165	130	—	M10x14.5	4	265.5	43
F 41 2/3	**P100**	231	28	31.3	8	250	215	180	—	M12x16	4.5	275.5	47
F 41 2/3	**P112**	231	28	31.3	8	250	215	180	—	M12x16	4.5	275.5	47
F 41 2/3	**P132**	—	38	41.3	10	300	265	230	16	14	5	312	50
F 41 4	**P63**	—	11	12.8	4	140	115	95	—	M8x19	4	307.5	44
F 41 4	**P71**	—	14	16.3	5	160	130	110	—	M8x16	4.5	307.5	44
F 41 4	**P80**	—	19	21.8	6	200	165	130	—	M10x14.5	4	327	45
F 41 4	**P90**	—	24	27.3	8	200	165	130	—	M10x14.5	4	327	45
F 41 4	**P100**	—	28	31.3	8	250	215	180	—	M12x16	4.5	337	49
F 41 4	**P112**	—	28	31.3	8	250	215	180	—	M12x16	4.5	337	49

F 41...HS

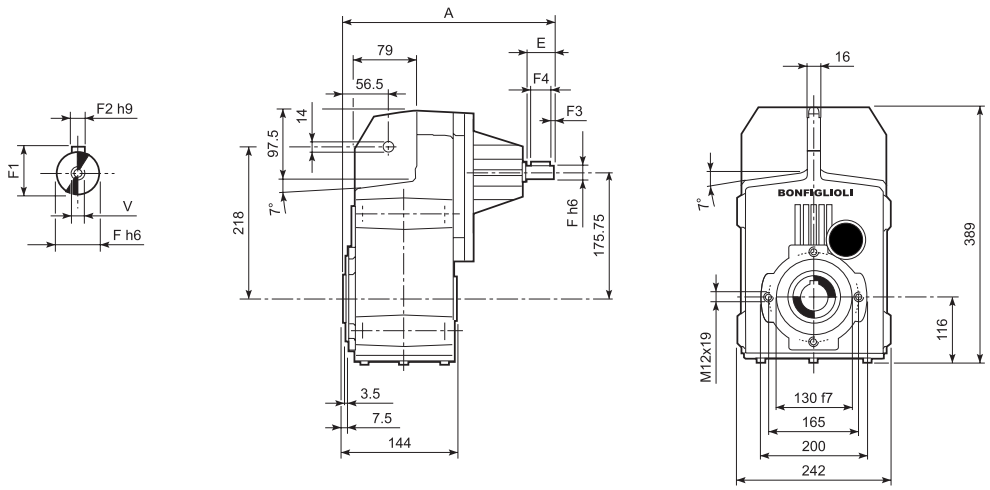

		A	E	F	F1	F2	F3	F4	V	Kg
F 41 2	**HS**	335.5	50	24	27	8	2.5	45	M8x19	44.9
F 41 3		335.5	50	24	27	8	2.5	45	M8x19	46.4
F 41 4		357.5	40	19	21.5	6	2.5	35	M6x16	43.5

F 41...SK / SC

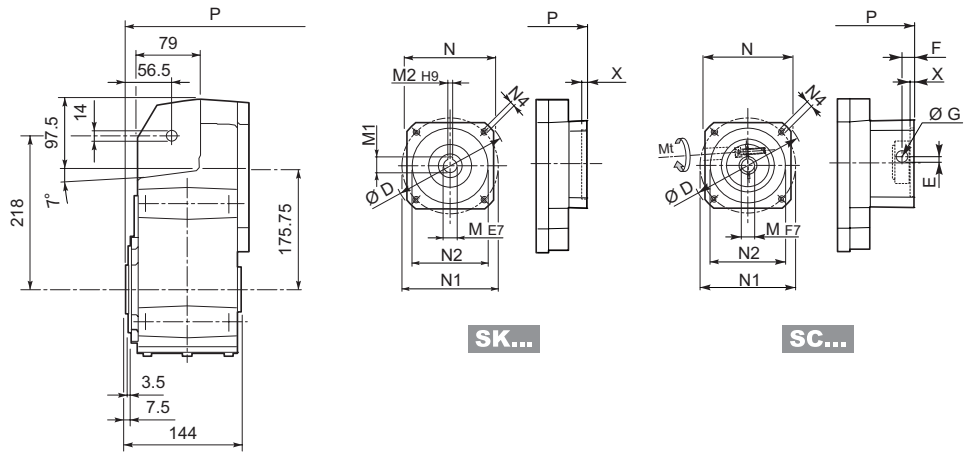

											2/3x		4x	
		D	M	M1	M2	N	N1	N2	N4	X	P	Kg	P	Kg
F 41 4	**SK 60A**	102	11	12.8	4	82	75	60	M5x10	3.5	—	—	279	43
F 41 4	**SK 60B**	102	14	16.3	5	82	75	60	M5x10	4	—	—	286	44
F 41 4	**SK 80A**	115	14	16.3	5	90	100	80	M6x12	4	—	—	286	44
F 41 2/3	**SK 80B**	120	14	16.3	5	96	100	80	M6x12	4	265.5	43	—	—
F 41 2/3/4	**SK 80C**	120	19	21.8	6	96	100	80	M6x12	4	265.5	43	327	45
F 41 2/3/4	**SK 95A**	130	14	16.3	5	102	115	95	M8x12	4	265.5	43	327	45
F 41 2/3/4	**SK 95B**	130	19	21.8	6	102	115	95	M8x12	4	265.5	43	327	45
F 41 2/3/4	**SK 95C**	130	24	27.3	8	102	115	95	M8x12	4	265.5	43	327	45
F 41 2/3/4	**SK 110A**	150	19	21.8	6	120	130	110	M8x12	5	265.5	43	327	45
F 41 2/3/4	**SK 110B**	150	24	27.3	8	120	130	110	M8x12	5	265.5	43	327	45
F 41 2/3	**SK 130A**	188	24	27.3	8	142	165	130	M10x20	5	265.5	45	—	—
F 41 2/3	**SK 130B**	189	32	35.3	10	160	165	130	M10x20	5	312	47	—	—
F 41 2/3	**SK 180A**	240	32	35.3	10	192	215	180	M12x19	5	312	47	—	—
F 41 2/3	**SK 180B**	240	38	41.3	10	192	215	180	M12x19	5	312	47	—	—

														2/3x		4x	
			Mt [Nm]	D	E	F	G	M	N	N1	N2	N4	X	P	Kg	P	Kg
F 41 4	**SC 60A**	M6	15	102	7	12.5	12.5	11	82	75	60	M5x10	4	—	—	306	44
F 41 4	**SC 60B**	M6	15	102	7	12.5	12.5	14	82	75	60	M5x10	4	—	—	306	45
F 41 4	**SC 80A**	M6	15	115	6	12.5	12.5	14	90	100	80	M6x12	4	—	—	306	45
F 41 2/3	**SC 80B**	M6	15	120	15.5	14.5	17.75	14	96	100	80	M6x12	4	289	44	—	—
F 41 2/3/4	**SC 80C**	M6	15	120	15.5	14.5	17.75	19	96	100	80	M6x12	4	289	44	350.5	46
F 41 2/3/4	**SC 95A**	M6	15	130	16.5	15	17.75	14	102	115	95	M8x16	4	289	44	350.5	46
F 41 2/3/4	**SC 95B**	M6	15	130	16.5	15	17.75	19	102	115	95	M8x16	4	289	44	350.5	46
F 41 2/3/4	**SC 95C**	M6	15	130	16.5	15	17.75	24	102	115	95	M8x16	4	289	44	350.5	46
F 41 2/3/4	**SC 110A**	M6	15	150	16.5	16	17.75	19	120	130	110	M8x16	5	289	45	350.5	47
F 41 2/3/4	**SC 110B**	M6	15	150	16.5	16	17.75	24	120	130	110	M8x16	5	289	45	350.5	47
F 41 2/3	**SC 130A**	M6	15	188	19	16	17.75	24	142	165	130	M10x20	5	289	46	—	—
F 41 2/3	**SC 130B**	M8	36	189	20	17	17.75	32	160	165	130	M10x20	5	335	50	—	—
F 41 2/3	**SC 180A**	M8	36	240	20	17.5	17.75	32	192	215	180	M12x24	5	339	50	—	—
F 41 2/3	**SC 180B**	M8	36	240	20	17.5	17.75	38	192	215	180	M12x24	5	339	50	—	—

F 41...H

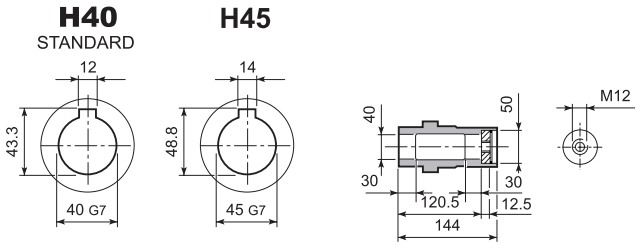

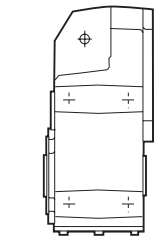

F 41...S

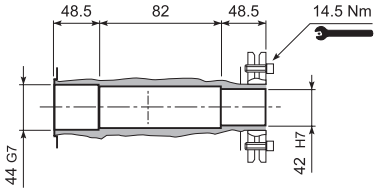

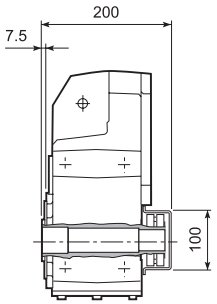

F 41...R

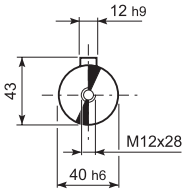

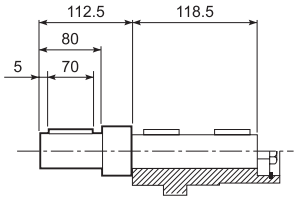

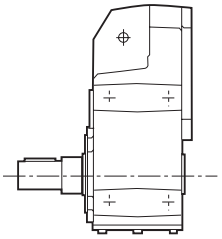

F 41...QF

	Ø
QF42	42
QF45	45

$M_{n2\ max}$ [Nm]	
F 41 QF42	850
F 41 QF45	1000

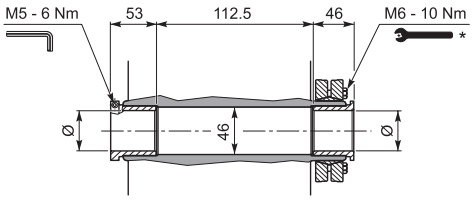

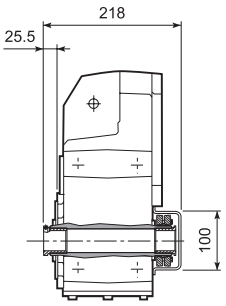

F 41...F...

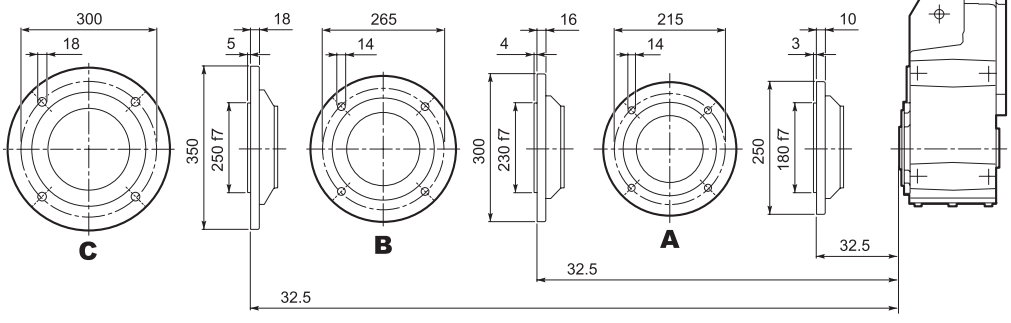

详细安装指南见随机文件

F 51...M/ME/MX

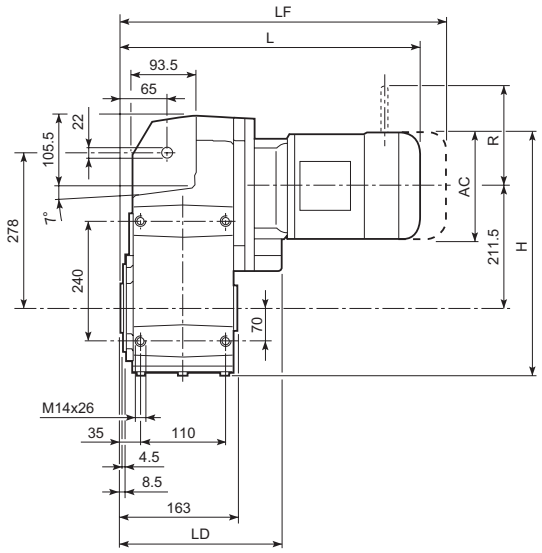

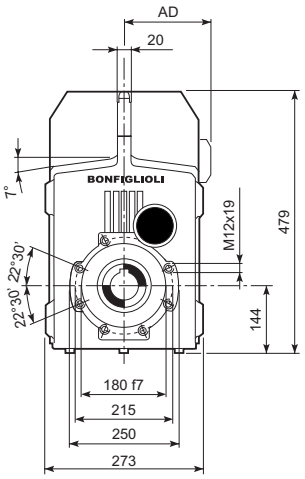

										M...FD M...FA		M...FD		M...FA	
				AC	H	L	LD	AD	Kg	LF	Kg	R	AD	R	AD
F 51 2/3	**S1**	**M1**		138	424	423	—	108	73	484	76	103	135	124	108
F 51 2/3	**S2**	**ME2S**		156	433	452	238	119	73	—	—	—	—	—	—
F 51 2/3	**S2**	**MX2S**		156	433	496	238	119	78	—	—	—	—	—	—
F 51 2/3	**S3**	**ME3S**		195	452.5	495	253	142	77	—	—	—	—	—	—
F 51 2/3	**S3**	**MX3S**		195	452.5	527	253	142	80	—	—	—	—	—	—
F 51 2/3	**S3**	**ME3L**		195	452.5	527	253	142	87	—	—	—	—	—	—
F 51 2/3	**S3**	**MX3L**		195	452.5	571	253	142	93	—	—	—	—	—	—
F 51 2/3	**S4**	**ME4**	**MX4**	258	484	635	238	193	119	—	—	—	—	—	—
F 51 2/3	**S4**	**ME4LB**	**MX4LA**	258	484	670	238	193	127	—	—	—	—	—	—
F 51 2/3	**S5**	**ME5S**	**MX5S**	310	510	721.5	—	245	153	—	—	—	—	—	—
F 51 2/3	**S5**	**ME5L**	**MX5L**	310	510	765.5	—	245	169	—	—	—	—	—	—
F 51 4	**S1**	**M1**		138	424	494.5	—	108	75	555.5	78	103	135	124	108
F 51 4	**S2**	**ME2S**		156	433	523.5	—	119	79	—	—	—	—	—	—
F 51 4	**S2**	**MX2S**		156	433	567.5	—	119	79	—	—	—	—	—	—
F 51 4	**S3**	**ME3S**		195	452.5	566.5	—	142	84	—	—	—	—	—	—
F 51 4	**S3**	**MX3S**		195	452.5	598.5	—	142	84	—	—	—	—	—	—
F 51 4	**S3**	**ME3L**		195	452.5	598.5	—	142	93	—	—	—	—	—	—
F 51 4	**S3**	**MX3L**		195	452.5	642.5	—	142	93	—	—	—	—	—	—

F 51...P(IEC)

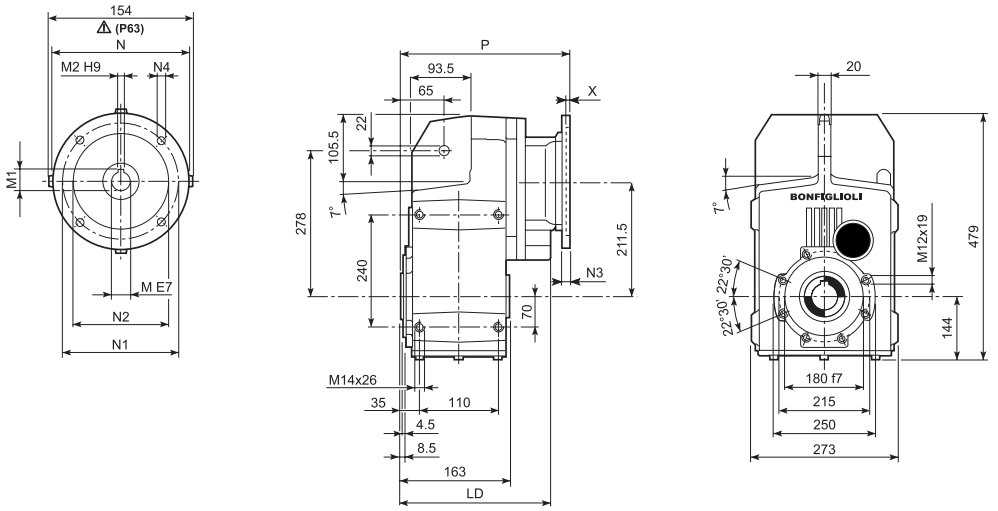

		LD	M	M1	M2	N	N1	N2	N3	N4	X	P	Kg
F 51 2/3	**P63**	238	11	12.8	4	140	115	95	—	M8x19	4	268	65
F 51 2/3	**P71**	238	14	16.3	5	160	130	110	—	M8x16	4.5	268	65
F 51 2/3	**P80**	253	19	21.8	6	200	165	130	—	M10x14.5	4	287.5	67
F 51 2/3	**P90**	253	24	27.3	8	200	165	130	—	M10x14.5	4	287.5	67
F 51 2/3	**P100**	238	28	31.3	8	250	215	180	—	M12x16	4.5	297.5	71
F 51 2/3	**P112**	238	28	31.3	8	250	215	180	—	M12x16	4.5	297.5	71
F 51 2/3	**P132**	238	38	41.3	10	300	265	230	16	14	5	334	74
F 51 2/3	**P160**	—	42	45.3	12	350	300	250	23	18	5.5	384.5	78
F 51 2/3	**P180**	—	48	51.8	14	350	300	250	23	18	5.5	384.5	78
F 51 4	**P63**	—	11	12.8	4	140	115	95	—	M8x19	4	339.5	70
F 51 4	**P71**	—	14	16.3	5	160	130	110	—	M8x16	4.5	339.5	70
F 51 4	**P80**	—	19	21.8	6	200	165	130	—	M10x14.5	4	359	71
F 51 4	**P90**	—	24	27.3	8	200	165	130	—	M10x14.5	4	359	71
F 51 4	**P100**	—	28	31.3	8	250	215	180	—	M12x16	4.5	369	75
F 51 4	**P112**	—	28	31.3	8	250	215	180	—	M12x16	4.5	369	75

F 51...HS

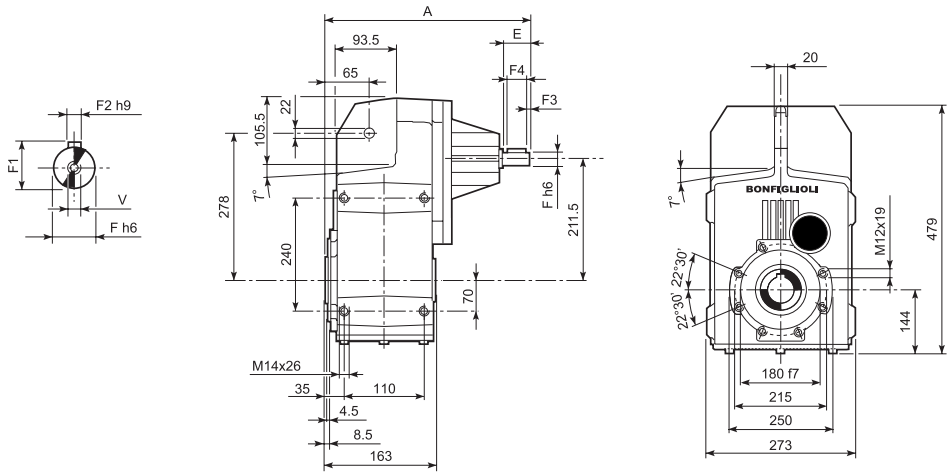

		A	E	F	F1	F2	F3	F4	V	Kg
F 51 2	**HS**	357.5	50	24	27	8	2.5	45	M8x19	65
F 51 3		357.5	50	24	27	8	2.5	45	M8x19	68
F 51 4		389.5	40	19	21.5	6	2.5	35	M6x16	70

F 51...SK / SC

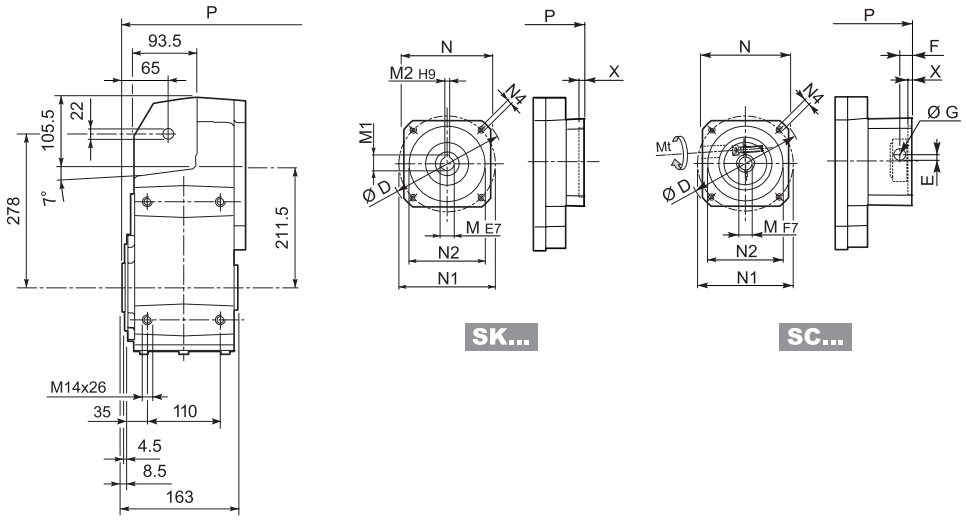

											2/3x		4x	
		D	M	M1	M2	N	N1	N2	N4	X	P	Kg	P	Kg
F 51 2/3	**SK 80B**	120	14	16.3	5	96	100	80	M6x12	4	287.5	67	—	—
F 51 2/3/4	**SK 80C**	120	19	21.8	6	96	100	80	M6x12	4	287.5	67	359	71
F 51 2/3/4	**SK 95A**	130	14	16.3	5	102	115	95	M8x12	4	287.5	67	359	71
F 51 2/3/4	**SK 95B**	130	19	21.8	6	102	115	95	M8x12	4	287.5	67	359	71
F 51 2/3/4	**SK 95C**	130	24	27.3	8	102	115	95	M8x12	4	287.5	67	359	71
F 51 2/3/4	**SK 110A**	150	19	21.8	6	120	130	110	M8x12	5	287.5	67	359	71
F 51 2/3/4	**SK 110B**	150	24	27.3	8	120	130	110	M8x12	5	287.5	67	359	71
F 51 2/3/4	**SK 130A**	188	24	27.3	8	142	165	130	M10x20	5	287.5	69	359	73
F 51 2/3	**SK 130B**	189	32	35.3	10	160	165	130	M10x20	5	334	75	—	—
F 51 2/3	**SK 180A**	240	32	35.3	10	192	215	180	M12x19	5	334	75	—	—
F 51 2/3	**SK 180B**	240	38	41.3	10	192	215	180	M12x19	5	334	75	—	—

														2/3x		4x	
			Mt [Nm]	D	E	F	G	M	N	N1	N2	N4	X	P	Kg	P	Kg
F 51 2/3	**SC 80B**	M6	15	120	15.5	14.5	17.75	14	96	100	80	M6x12	4	311	70	—	—
F 51 2/3/4	**SC 80C**	M6	15	120	15.5	14.5	17.75	19	96	100	80	M6x12	4	311	70	382.5	74
F 51 2/3/4	**SC 95A**	M6	15	130	16.5	15	17.75	14	102	115	95	M8x16	4	311	70	382.5	74
F 51 2/3/4	**SC 95B**	M6	15	130	16.5	15	17.75	19	102	115	95	M8x16	4	311	70	382.5	74
F 51 2/3/4	**SC 95C**	M6	15	130	16.5	15	17.75	24	102	115	95	M8x16	4	311	70	382.5	74
F 51 2/3/4	**SC 110A**	M6	15	150	16.5	16	17.75	19	120	130	110	M8x16	5	311	71	382.5	75
F 51 2/3/4	**SC 110B**	M6	15	150	16.5	16	17.75	24	120	130	110	M8x16	5	311	71	382.5	75
F 51 2/3/4	**SC 130A**	M6	15	188	19	16	17.75	24	142	165	130	M10x20	5	311	72	382.5	76
F 51 2/3	**SC 130B**	M8	36	189	20	17	17.75	32	160	165	130	M10x20	5	357	75	—	—
F 51 2/3	**SC 180A**	M8	36	240	20	17.5	17.75	32	192	215	180	M12x24	5	361	75	—	—
F 51 2/3	**SC 180B**	M8	36	240	20	17.5	17.75	38	192	215	180	M12x24	5	361	75	—	—

F 51

F 51...H

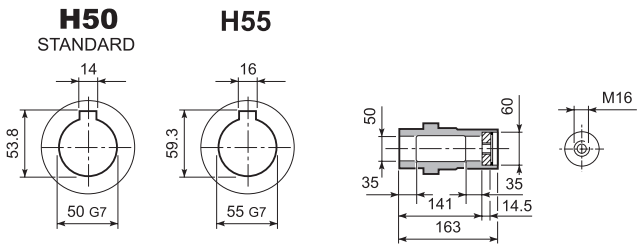

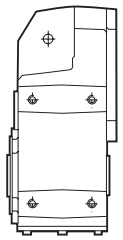

F 51...S

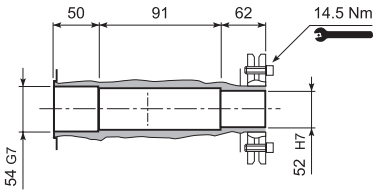

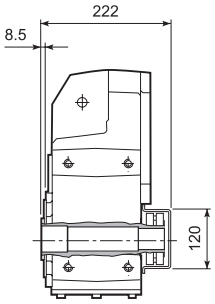

F 51...R

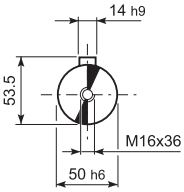

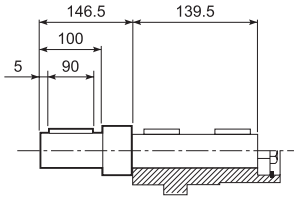

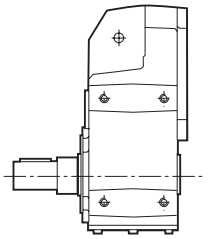

F 51...QF

	Ø
QF50	50
QF55	55

$M_{n2\ max}$ [Nm]	
F 51 QF50	1750

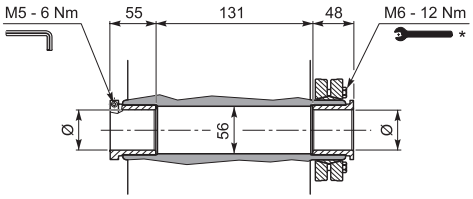

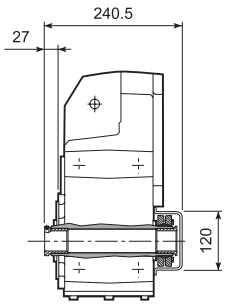

F 51...F...

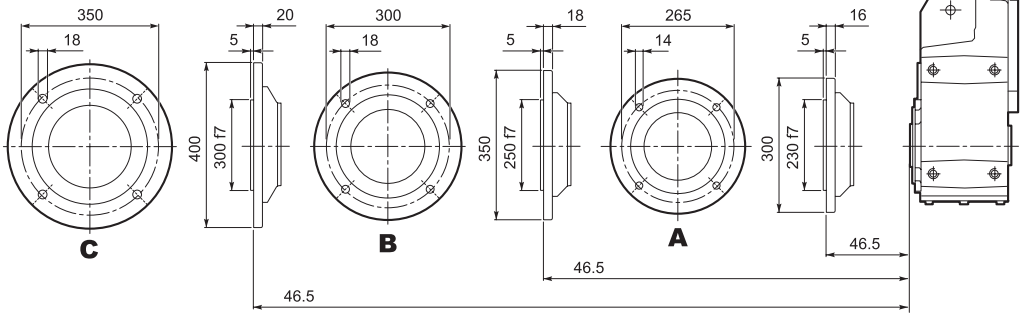

详细安装指南见随机文件

F 60...M/ME/MX

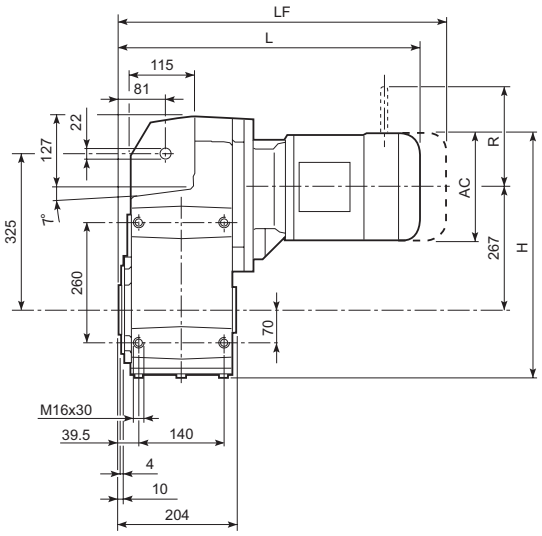

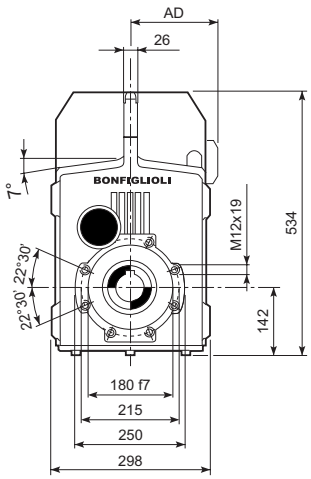

									M...FD M...FA		M...FD		M...FA	
				AC	H	L	AD	Kg	LF	Kg	R	AD	R	AD
F 60 3	**S2**	**ME2S**		156	487	486.5	119	114	—	—	—	—	—	—
F 60 3	**S2**	**MX2S**		156	487	530.5	119	119	—	—	—	—	—	—
F 60 3	**S3**	**ME3S**		195	506.5	529.5	142	119	—	—	—	—	—	—
F 60 3	**S3**	**MX3S**		195	506.5	561.5	142	122	—	—	—	—	—	—
F 60 3	**S3**	**ME3L**		195	506.5	561.5	142	124	—	—	—	—	—	—
F 60 3	**S3**	**MX3L**		195	506.5	605.5	142	130	—	—	—	—	—	—
F 60 3	**S4**	**ME4**	**MX4**	258	538	669.5	193	156	—	—	—	—	—	—
F 60 3	**S4**	**ME4LB**	**MX4LA**	258	538	704.5	193	164	—	—	—	—	—	—
F 60 3	**S5**	**ME5S**	**MX5S**	310	564	756	245	184	—	—	—	—	—	—
F 60 3	**S5**	**ME5L**	**MX5L**	310	564	800	245	200	—	—	—	—	—	—
F 60 4	**S1**	**M1**		138	478	528	108	113	589	116	103	135	124	108
F 60 4	**S2**	**ME2S**		156	487	557	119	117	—	—	—	—	—	—
F 60 4	**S2**	**MX2S**		156	487	601	119	122	—	—	—	—	—	—
F 60 4	**S3**	**ME3S**		195	506.5	600	142	122	—	—	—	—	—	—
F 60 4	**S3**	**MX3S**		195	506.5	632	142	125	—	—	—	—	—	—
F 60 4	**S3**	**ME3L**		195	506.5	632	142	131	—	—	—	—	—	—
F 60 4	**S3**	**MX3L**		195	506.5	676	142	137	—	—	—	—	—	—
F 60 4	**S4**	**ME4**	**MX4**	258	538	740	193	156	—	—	—	—	—	—
F 60 4	**S4**	**ME4LB**	**MX4LA**	258	538	775	193	164	—	—	—	—	—	—

F 60...P(IEC)

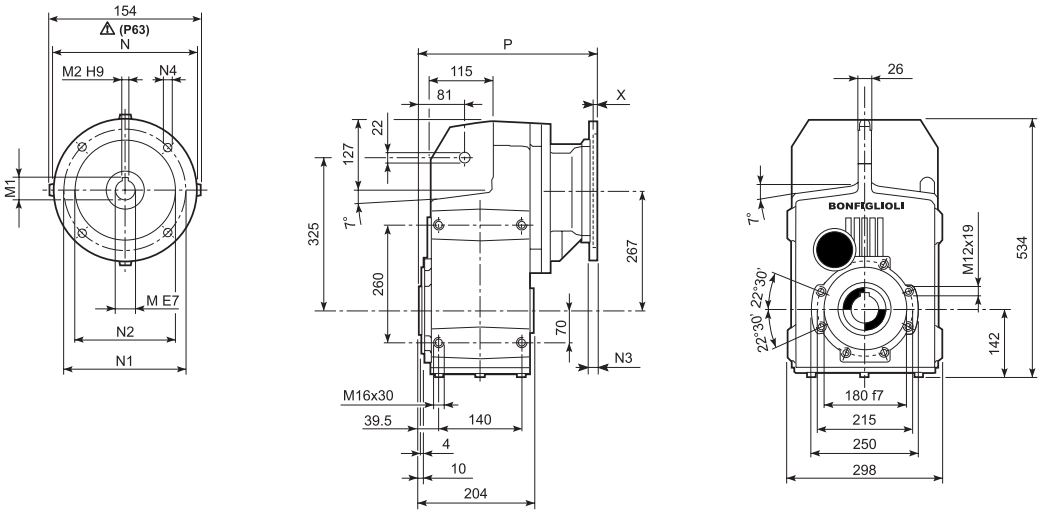

		M	M1	M2	N	N1	N2	N3	N4	X	P	Kg
F 60 3	**P63**	11	12.8	4	140	115	95	—	M8x19	4	302.5	103
F 60 3	**P71**	14	16.3	5	160	130	110	—	M8x16	4.5	302.5	103
F 60 3	**P80**	19	21.8	6	200	165	130	—	M10x14.5	4	322	104
F 60 3	**P90**	24	27.3	8	200	165	130	—	M10x14.5	4	322	104
F 60 3	**P100**	28	31.3	8	250	215	180	—	M12x16	4.5	331	108
F 60 3	**P112**	28	31.3	8	250	215	180	—	M12x16	4.5	331	108
F 60 3	**P132**	38	41.3	10	300	265	230	16	14	5	367.5	111
F 60 3	**P160**	42	45.3	12	350	300	250	23	18	5.5	419	116
F 60 3	**P180**	48	51.8	14	350	300	250	23	18	5.5	419	116
F 60 4	**P63**	11	12.8	4	140	115	95	—	M8x19	4	373	108
F 60 4	**P71**	14	16.3	5	160	130	110	—	M8x16	4.5	373	108
F 60 4	**P80**	19	21.8	6	200	165	130	—	M10x14.5	4	392.5	110
F 60 4	**P90**	24	27.3	8	200	165	130	—	M10x14.5	4	392.5	110
F 60 4	**P100**	28	31.3	8	250	215	180	—	M12x16	4.5	402.5	114
F 60 4	**P112**	28	31.3	8	250	215	180	—	M12x16	4.5	402.5	114

F 60...HS

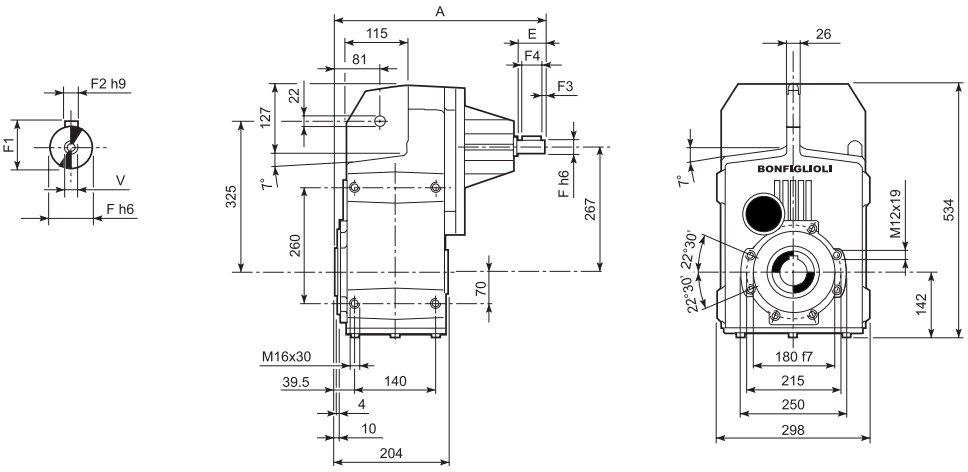

		A	E	F	F1	F2	F3	F4	V	Kg
F 60 3	**HS**	419	60	28	31	8	5.0	50	M10x22	108
F 60 4		462.5	50	24	27	8	2.5	45	M8x19	105

F 60...SK / SC

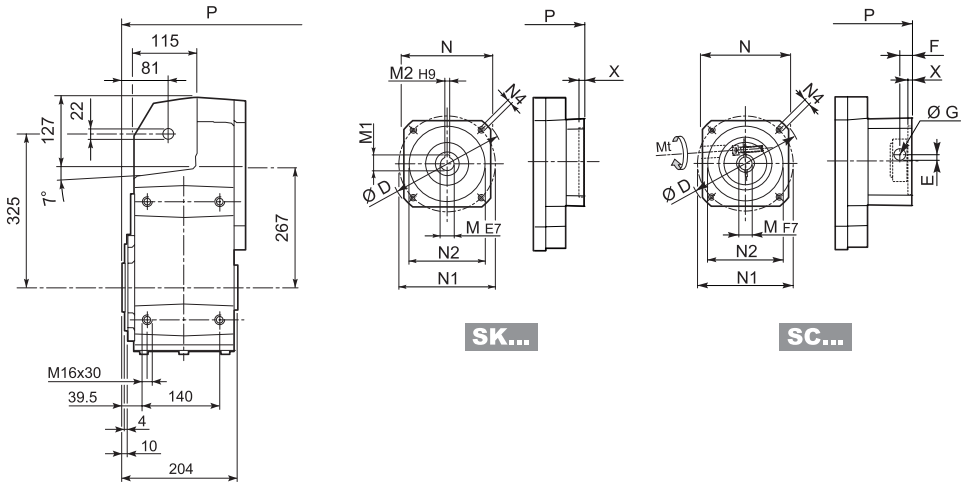

											2/3x		4x	
		D	M	M1	M2	N	N1	N2	N4	X	P	Kg	P	Kg
F 60 4	**SK 80B**	120	14	16.3	5	96	100	80	M6x12	4	—	—	392.5	109
F 60 3/4	**SK 80C**	120	19	21.8	6	96	100	80	M6x12	4	322	106	392.5	112
F 60 3/4	**SK 95A**	130	14	16.3	5	102	115	95	M8x12	4	322	106	392.5	112
F 60 3/4	**SK 95B**	130	19	21.8	6	102	115	95	M8x12	4	322	106	392.5	112
F 60 3/4	**SK 95C**	130	24	27.3	8	102	115	95	M8x12	4	322	106	392.5	112
F 60 3/4	**SK 110A**	140	19	21.8	6	120	130	110	M8x12	5	322	106	392.5	112
F 60 3/4	**SK 110B**	140	24	27.3	8	120	130	110	M8x12	5	322	106	392.5	112
F 60 3/4	**SK 130A**	188	24	27.3	8	142	165	130	M10x20	5	322	108	392.5	112
F 60 3	**SK 130B**	189	32	35.3	10	160	165	130	M10x20	5	368.5	109	—	—
F 60 3	**SK 180A**	240	32	35.3	10	192	215	180	M12x19	5	368.5	109	—	—
F 60 3	**SK 180B**	240	38	41.3	10	192	215	180	M12x19	5	368.5	109	—	—

														2/3x		4x	
			Mt [Nm]	D	E	F	G	M	N	N1	N2	N4	X	P	Kg	P	Kg
F 60 4	**SC 80B**	M6	15	120	15.5	14.5	17.75	14	96	100	80	M6x12	4	—	—	416	113
F 60 3/4	**SC 80C**	M6	15	120	15.5	14.5	17.75	19	96	100	80	M6x12	4	345.5	107	416	113
F 60 3/4	**SC 95A**	M6	15	130	16.5	15	17.75	14	102	115	95	M8x16	4	345.5	107	416	113
F 60 3/4	**SC 95B**	M6	15	130	16.5	15	17.75	19	102	115	95	M8x16	4	345.5	107	416	113
F 60 3/4	**SC 95C**	M6	15	130	16.5	15	17.75	24	102	115	95	M8x16	4	345.5	107	416	113
F 60 3/4	**SC 110A**	M6	15	140	16.5	16	17.75	19	120	130	110	M8x16	5	345.5	108	416	113
F 60 3/4	**SC 110B**	M6	15	140	16.5	16	17.75	24	120	130	110	M8x16	5	345.5	108	416	113
F 60 3/4	**SC 130A**	M6	15	188	19	16	17.75	24	142	165	130	M10x20	5	345.5	109	416	115
F 60 3	**SC 130B**	M8	36	189	20	17	17.75	32	160	165	130	M10x20	5	390.5	112	—	—
F 60 3	**SC 180A**	M8	36	240	20	17.5	17.75	32	192	215	180	M12x24	5	394.5	112	—	—
F 60 3	**SC 180B**	M8	36	240	20	17.5	17.75	38	192	215	180	M12x24	5	394.5	112	—	—

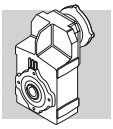

F 60

F 60...H

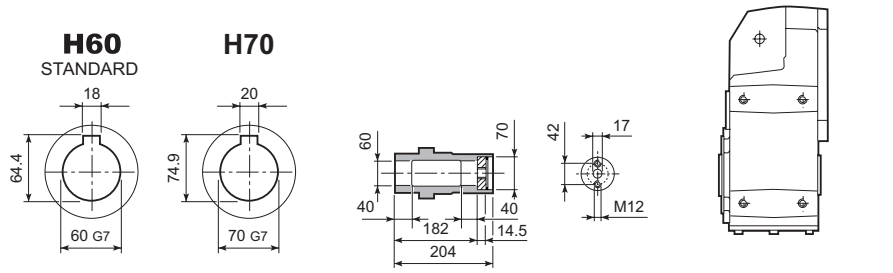

F 60...S

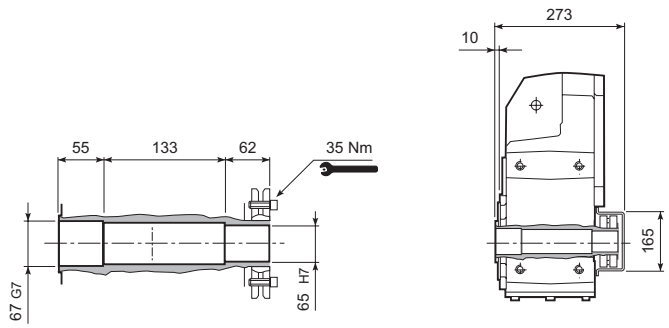

F 60...R

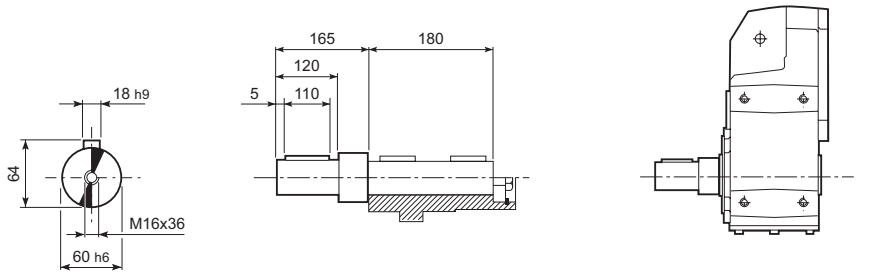

F 60...QF

	Ø
QF60	60
QF65	65
QF70	70

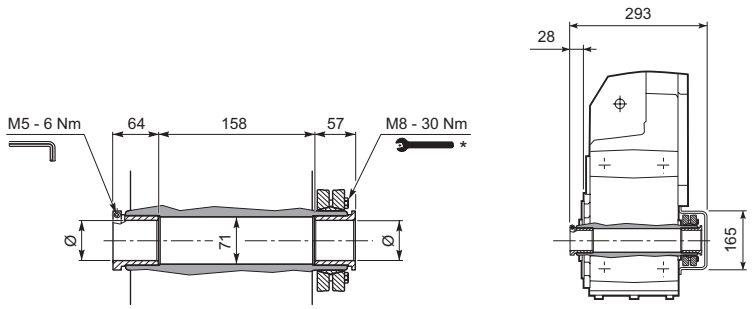

F 60...F...

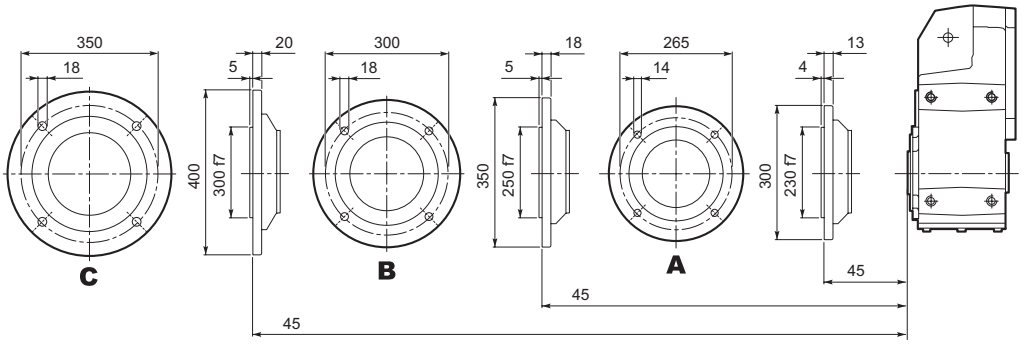

详细安装指南见随机文件

F 70...M/ME/MX

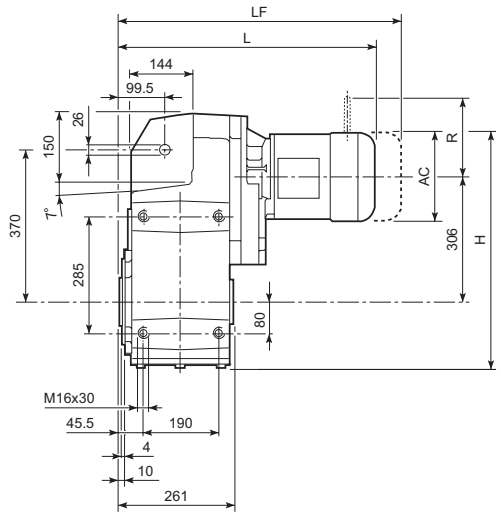

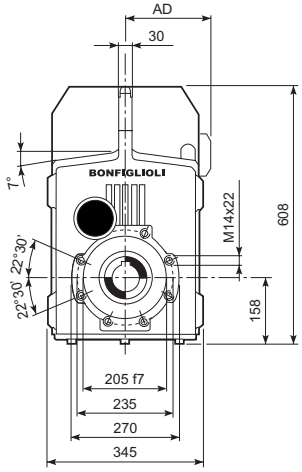

									M...FD M...FA		M...FD		M...FA	
				AC	H	L	AD	Kg	LF	Kg	R	AD	R	AD
F 70 3	**S2**	**ME2S**		156	542	552	119	173	—	—	—	—	—	—
F 70 3	**S2**	**MX2S**		156	542	596	119	178	—	—	—	—	—	—
F 70 3	**S3**	**ME3S**		195	561.5	595	142	178	—	—	—	—	—	—
F 70 3	**S3**	**MX3S**		195	561.5	627	142	181	—	—	—	—	—	—
F 70 3	**S3**	**ME3L**		195	561.5	627	142	188	—	—	—	—	—	—
F 70 3	**S3**	**MX3L**		195	561.5	671	142	194	—	—	—	—	—	—
F 70 3	**S4**	**ME4**	**MX4**	258	593	735	193	220	—	—	—	—	—	—
F 70 3	**S4**	**ME4LB**	**MX4LA**	258	593	770	193	228	—	—	—	—	—	—
F 70 3	**S5**	**ME5S**	**MX5S**	310	619	821.5	245	248	—	—	—	—	—	—
F 70 3	**S5**	**ME5L**	**MX5L**	310	619	865.5	245	264	—	—	—	—	—	—
F 70 4	**S1**	**M1**		138	533	574	108	173	635	176	103	135	124	108
F 70 4	**S2**	**ME2S**		156	542	603	119	177	—	—	—	—	—	—
F 70 4	**S2**	**MX2S**		156	542	647	119	182	—	—	—	—	—	—
F 70 4	**S3**	**ME3S**		195	561.5	646	142	181	—	—	—	—	—	—
F 70 4	**S3**	**MX3S**		195	561.5	678	142	184	—	—	—	—	—	—
F 70 4	**S3**	**ME3L**		195	561.5	678	142	191	—	—	—	—	—	—
F 70 4	**S3**	**MX3L**		195	561.5	722	142	197	—	—	—	—	—	—
F 70 4	**S4**	**ME4**	**MX4**	258	593	786	193	223	—	—	—	—	—	—
F 70 4	**S4**	**ME4LB**	**MX4LA**	258	593	821	193	231	—	—	—	—	—	—

F 70...P(IEC)

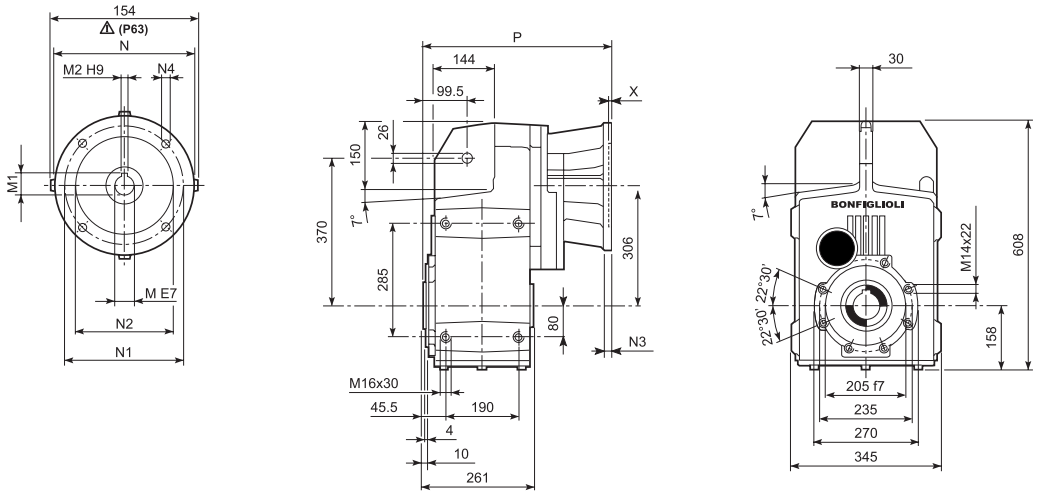

		M	M1	M2	N	N1	N2	N3	N4	X	P	Kg
F 70 3	**P80**	19	21.8	6	200	165	130	—	M10x14.5	4	387.5	167
F 70 3	**P90**	24	27.3	8	200	165	130	—	M10x14.5	4	387.5	167
F 70 3	**P100**	28	31.3	8	250	215	180	—	M12x16	4.5	397.5	171
F 70 3	**P112**	28	31.3	8	250	215	180	—	M12x16	4.5	397.5	171
F 70 3	**P132**	38	41.3	10	300	265	230	16	14	5	434	173
F 70 3	**P160**	42	45.3	12	350	300	250	23	18	6	489.5	185
F 70 3	**P180**	48	51.8	14	350	300	250	23	18	6	489.5	185
F 70 3	**P200**	55	59.3	16	400	350	300	—	M16x25	7	514.5	206
F 70 4	**P63**	11	12.8	4	140	115	95	—	M8x19	4	419	168
F 70 4	**P71**	14	16.3	5	160	130	110	—	M8x16	4.5	419	168
F 70 4	**P80**	19	21.8	6	200	165	130	—	M10x14.5	4	438.5	170
F 70 4	**P90**	24	27.3	8	200	165	130	—	M10x14.5	4	438.5	170
F 70 4	**P100**	28	31.3	8	250	215	180	—	M12x16	4.5	446.5	174
F 70 4	**P112**	28	31.3	8	250	215	180	—	M12x16	4.5	446.5	174
F 70 4	**P132**	38	41.3	10	300	265	230	16	14	5	482	176

F 70...HS

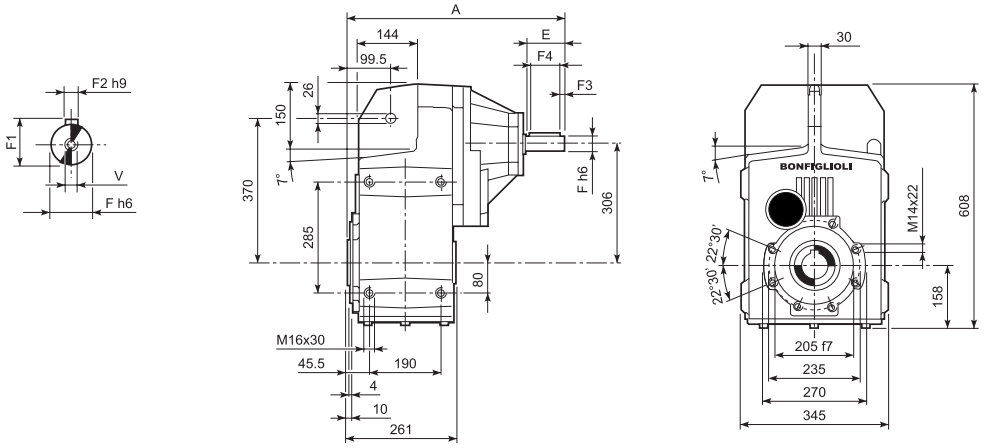

		A	E	F	F1	F2	F3	F4	V	Kg
F 70 3	**HS**	572	110	42	45	12	10	90	M12x28	186
F 70 4		508.5	50	24	27	8	2.5	45	M8x19	174

F 70

F 70...H

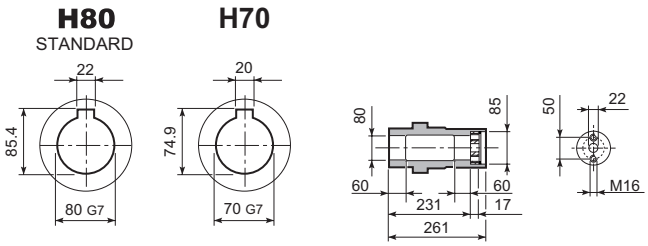

F 70...S

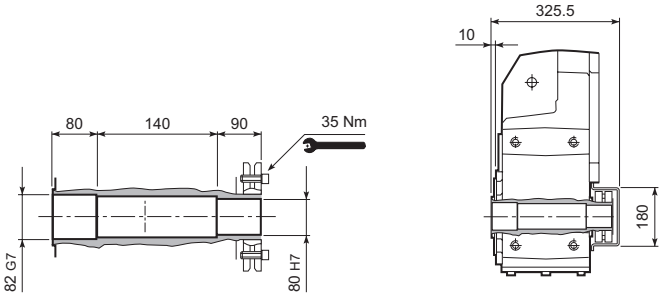

F 70...R

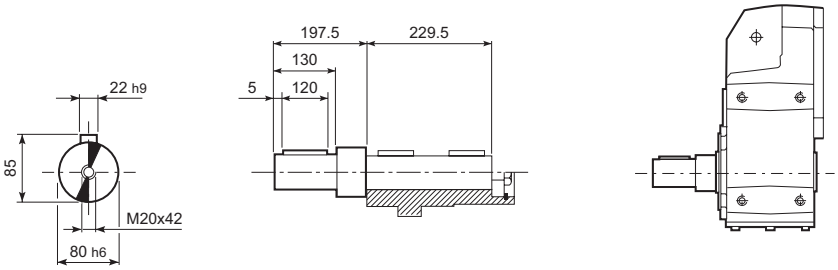

F 70...F...

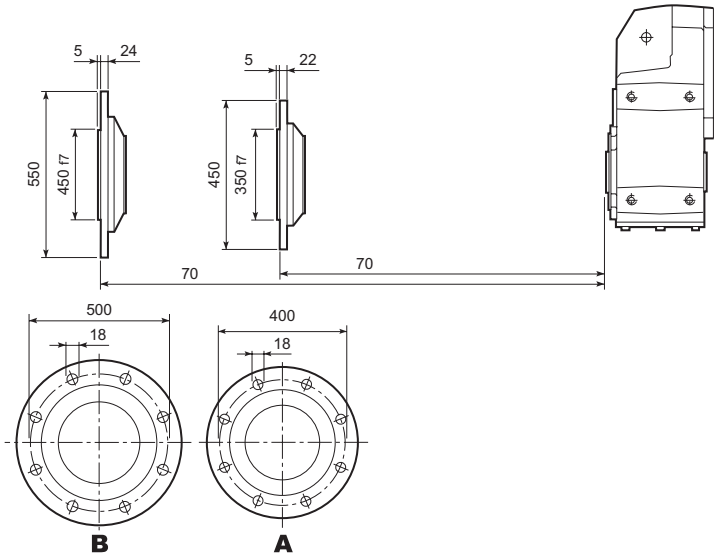

Bonfiglioli Riduttori

F 80...M/ME/MX

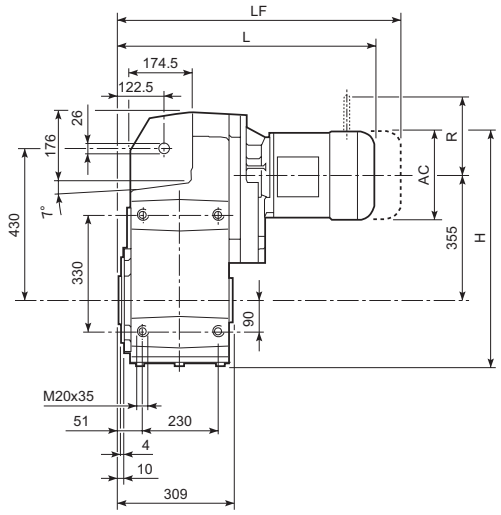

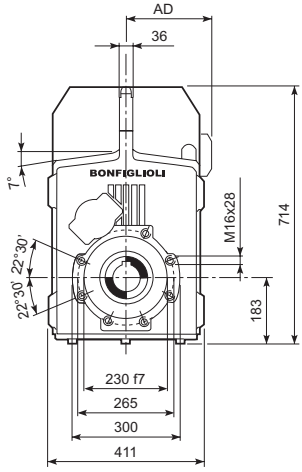

									M...FD M...FA		M...FD		M...FA	
				AC	H	L	AD	Kg	LF	Kg	R	AD	R	AD
F 80 3	**S3**	**ME3S**		195	635.5	653	142	266	—	—	—	—	—	—
F 80 3	**S3**	**MX3S**		195	635.5	685	142	269	—	—	—	—	—	—
F 80 3	**S3**	**ME3L**		195	635.5	685	142	275	—	—	—	—	—	—
F 80 3	**S3**	**MX3L**		195	635.5	729	142	281	—	—	—	—	—	—
F 80 3	**S4**	**ME4**	**MX4**	258	667	793	193	307	—	—	—	—	—	—
F 80 3	**S4**	**ME4LB**	**MX4LA**	258	667	828	193	315	—	—	—	—	—	—
F 80 3	**S5**	**ME5S**	**MX5S**	310	693	879.5	245	335	—	—	—	—	—	—
F 80 3	**S5**	**ME5L**	**MX5L**	310	693	923.5	245	351	—	—	—	—	—	—
F 80 4	**S1**	**M1**		138	607	644	108	262	705	265	103	135	124	108
F 80 4	**S2**	**M2S**		156	616	673	119	266	743	269	129	146	134	119
F 80 4	**S2**	**ME2S**		156	616	673	119	266	—	—	—	—	—	—
F 80 4	**S2**	**MX2S**		156	616	717	119	271	—	—	—	—	—	—
F 80 4	**S3**	**ME3S**		195	635.5	716	142	271	—	—	—	—	—	—
F 80 4	**S3**	**MX3S**		195	635.5	748	142	274	—	—	—	—	—	—
F 80 4	**S3**	**ME3L**		195	635.5	748	142	280	—	—	—	—	—	—
F 80 4	**S3**	**MX3L**		195	635.5	792	142	286	—	—	—	—	—	—
F 80 4	**S4**	**ME4**	**MX4**	258	667	856	193	312	—	—	—	—	—	—
F 80 4	**S4**	**ME4LB**	**MX4LA**	258	667	891	193	320	—	—	—	—	—	—

F 80...P(IEC)

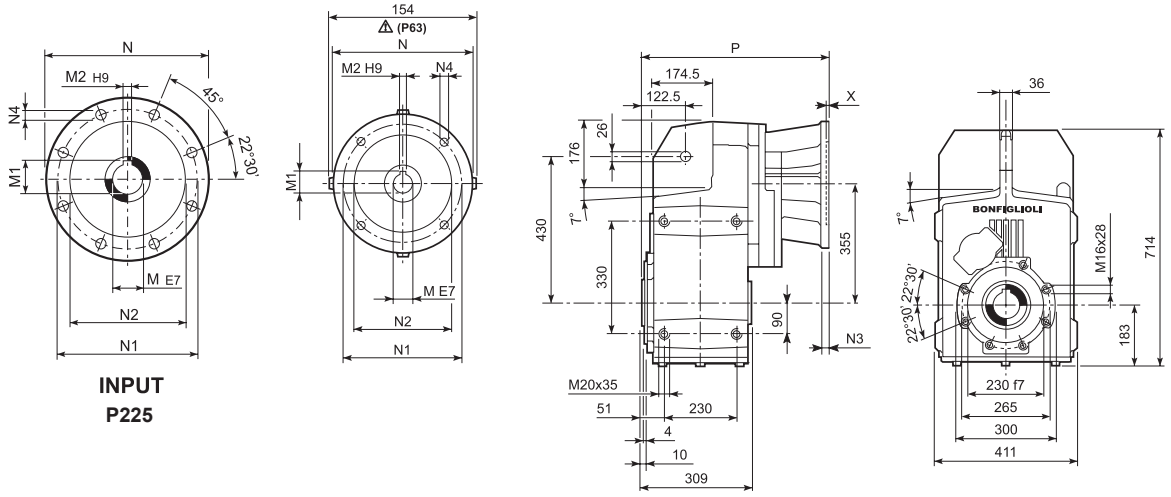

		M	M1	M2	N	N1	N2	N3	N4	X	P	Kg
F 80 3	**P80**	19	21.8	6	200	165	130	—	M10x14.5	4	445.5	255
F 80 3	**P90**	24	27.3	8	200	165	130	—	M10x14.5	4	445.5	255
F 80 3	**P100**	28	31.3	8	250	215	180	—	M12x16	4.5	455.5	259
F 80 3	**P112**	28	31.3	8	250	215	180	—	M12x16	4.5	455.5	259
F 80 3	**P132**	38	41.3	10	300	265	230	16	14	5	492	261
F 80 3	**P160**	42	45.3	12	350	300	250	23	18	6	547.5	276
F 80 3	**P180**	48	51.8	14	350	300	250	23	18	6	547.5	276
F 80 3	**P200**	55	59.3	16	400	350	300	—	M16x25	7	572.5	298
F 80 3	**P225**	60	64.4	18	450	400	350	25	18	6	618	298
F 80 4	**P63**	11	12.8	4	140	115	95	—	M8x19	4	489	258
F 80 4	**P71**	14	16.3	5	160	130	110	—	M8x16	4.5	489	258
F 80 4	**P80**	19	21.8	6	200	165	130	—	M10x14.5	4	508.5	260
F 80 4	**P90**	24	27.3	8	200	165	130	—	M10x14.5	4	508.5	260
F 80 4	**P100**	28	31.3	8	250	215	180	—	M12x16	4.5	518.5	264
F 80 4	**P112**	28	31.3	8	250	215	180	—	M12x16	4.5	518.5	264
F 80 4	**P132**	38	41.3	10	300	265	230	16	14	5	552	266

F 80...HS

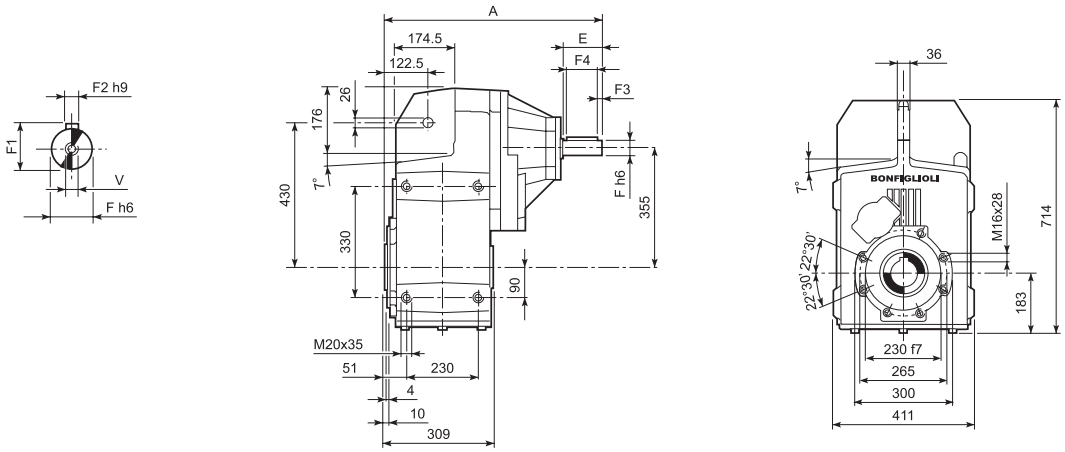

		A	E	F	F1	F2	F3	F4	V	Kg
F 80 3	**HS**	630	110	42	45	12	10	90	M12x28	273
F 80 4		575.5	50	24	27	8	2.5	45	M8x19	263

Bonfiglioli Riduttori

F 80

F 80...H

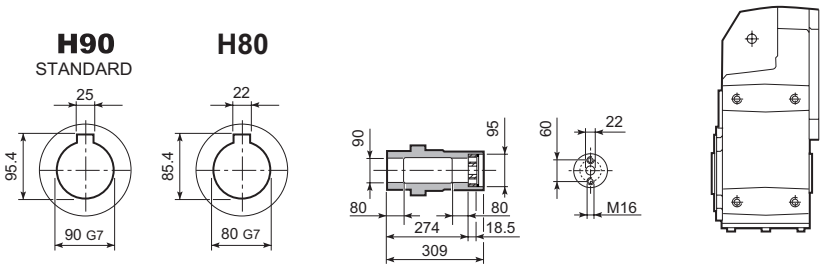

F 80...S

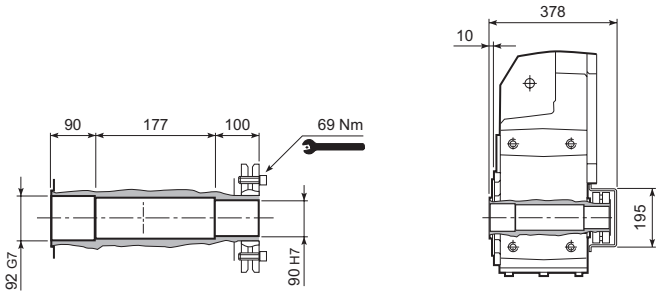

F 80...R

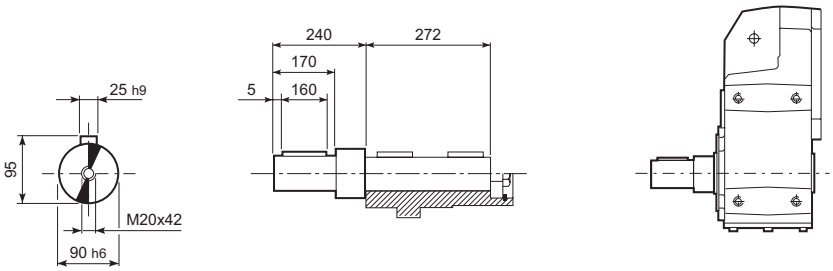

F 80...F...

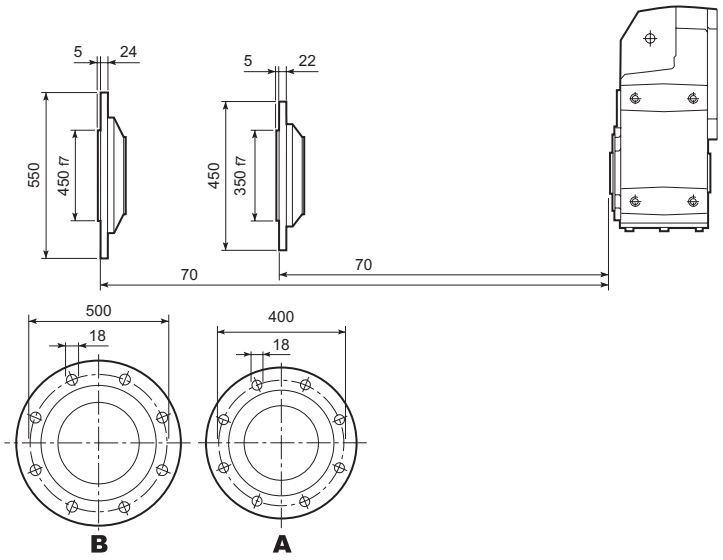

F 90...M/ME/MX

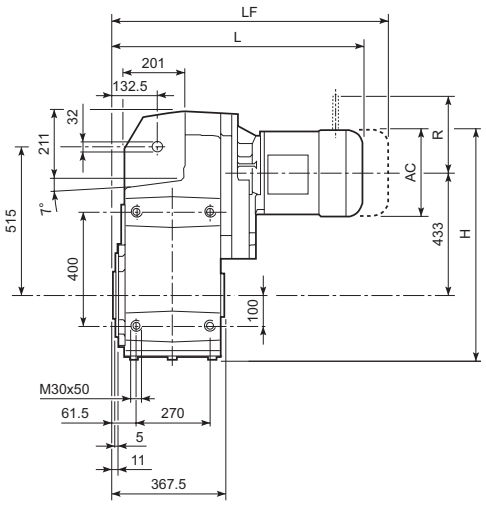

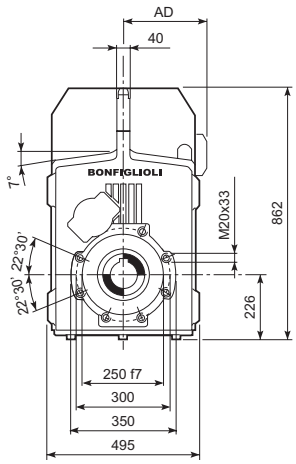

									M...FD M...FA		M...FD		M...FA	
				AC	H	L	AD	Kg	LF	Kg	R	AD	R	AD
F 90 3	**S3**	**ME3S**		195	756	728	142	453	—	—	—	—	—	—
F 90 3	**S3**	**MX3S**		195	756	760	142	456	—	—	—	—	—	—
F 90 3	**S3**	**ME3L**		195	756	760	142	462	—	—	—	—	—	—
F 90 3	**S3**	**MX3L**		195	756	804	142	468	—	—	—	—	—	—
F 90 3	**S4**	**ME4**	**MX4**	258	787.5	868	193	494	—	—	—	—	—	—
F 90 3	**S5**	**ME5L**	**MX5L**	310	813.5	998.5	245	538	—	—	—	—	—	—
F 90 4	**S2**	**M2S**		156	736.5	768	119	456	838	460	129	146	134	119
F 90 4	**S2**	**ME2S**		156	736.5	768	119	456	—	—	—	—	—	—
F 90 4	**S2**	**MX2S**		156	736.5	812	119	461	—	—	—	—	—	—
F 90 4	**S3**	**ME3S**		195	756	811	142	460	—	—	—	—	—	—
F 90 4	**S3**	**MX3S**		195	756	843	142	463	—	—	—	—	—	—
F 90 4	**S3**	**ME3L**		195	756	843	142	470	—	—	—	—	—	—
F 90 4	**S3**	**MX3L**		195	756	887	142	476	—	—	—	—	—	—
F 90 4	**S4**	**ME4**	**MX4**	258	787.5	951	193	502	—	—	—	—	—	—
F 90 4	**S4**	**ME4LB**	**MX4LA**	258	787.5	986	193	510	—	—	—	—	—	—

F 90...P(IEC)

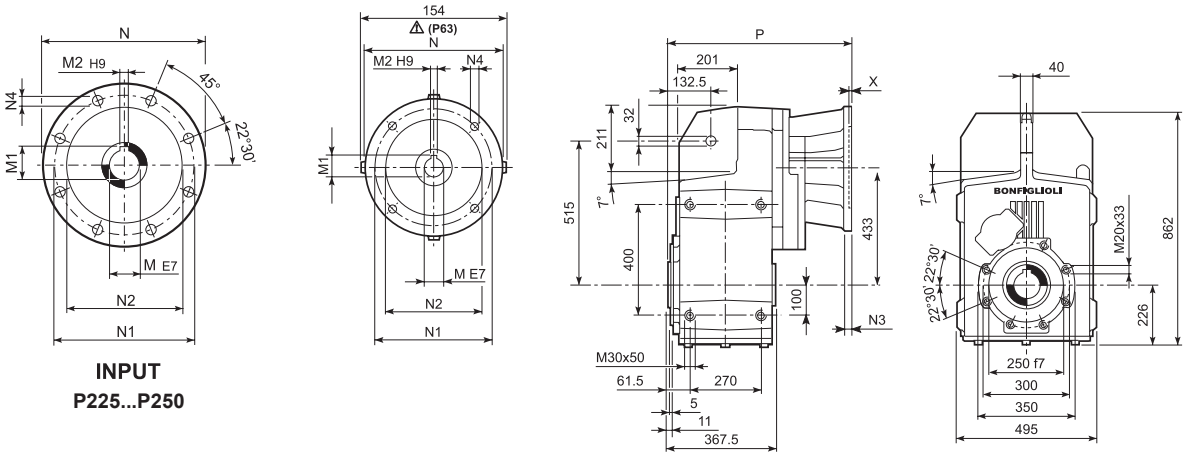

INPUT
P225...P250

		M	M1	M2	N	N1	N2	N3	N4	X	P	Kg
F 90 3	**P80**	19	21.8	6	200	165	130	—	M10x14.5	4	520.5	442
F 90 3	**P90**	24	27.3	8	200	165	130	—	M10x14.5	4	520.5	442
F 90 3	**P100**	28	31.3	8	250	215	180	—	M12x16	4.5	530.5	446
F 90 3	**P112**	28	31.3	8	250	215	180	—	M12x16	4.5	530.5	446
F 90 3	**P132**	38	41.3	10	300	265	230	16	14	5	567	449
F 90 3	**P160**	42	45.3	12	350	300	250	23	18	6	622.5	463
F 90 3	**P180**	48	51.8	14	350	300	250	23	18	6	622.5	463
F 90 3	**P200**	55	59.3	16	400	350	300	—	M16x25	7	647.5	485
F 90 3	**P225**	60	64.4	18	450	400	350	30	18	6	693	485
F 90 3	**P250**	65	69.4	18	550	500	450	30	18	6	723	507
F 90 4	**P63**	11	12.8	4	140	115	95	—	M8x19	4	584	448
F 90 4	**P71**	14	16.3	5	160	130	110	—	M8x16	4.5	584	448
F 90 4	**P80**	19	21.8	6	200	165	130	—	M10x14.5	4	603.5	450
F 90 4	**P90**	24	27.3	8	200	165	130	—	M10x14.5	4	603.5	450
F 90 4	**P100**	28	31.3	8	250	215	180	—	M12x16	4.5	613.5	454
F 90 4	**P112**	28	31.3	8	250	215	180	—	M12x16	4.5	613.5	454
F 90 4	**P132**	38	41.3	10	300	265	230	16	14	5	650	455
F 90 4	**P160**	42	45.3	12	350	300	250	23	18	5.5	700.5	461
F 90 4	**P180**	48	51.8	14	350	300	250	23	18	5.5	700.5	461

F 90...HS

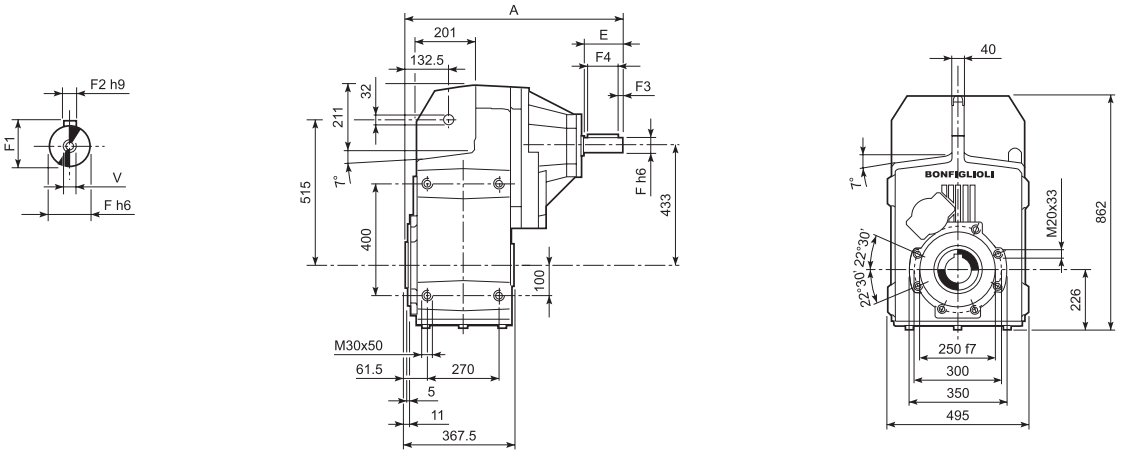

		A	E	F	F1	F2	F3	F4	V	Kg
F 90 3	**HS**	806.5	140	60	64	18	10	120	M16x36	485
F 90 4		673.5	50	24	27	8	2.5	45	M8x19	452

F 90

F 90...H

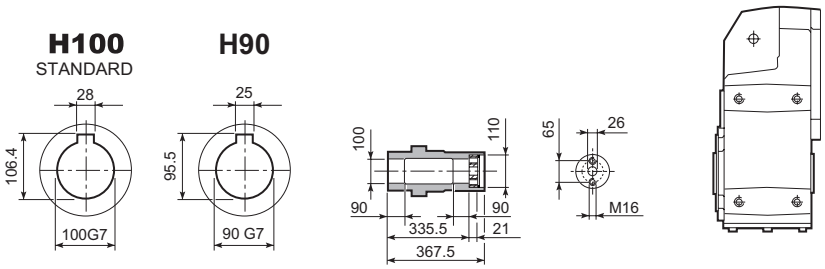

F 90...S

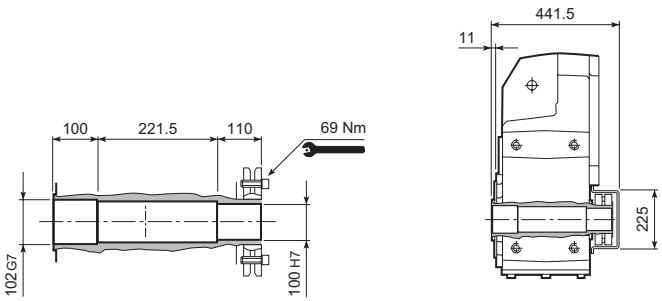

F 90...R

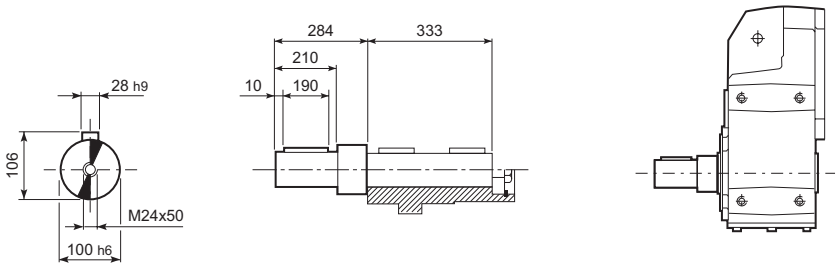

F 90...F...

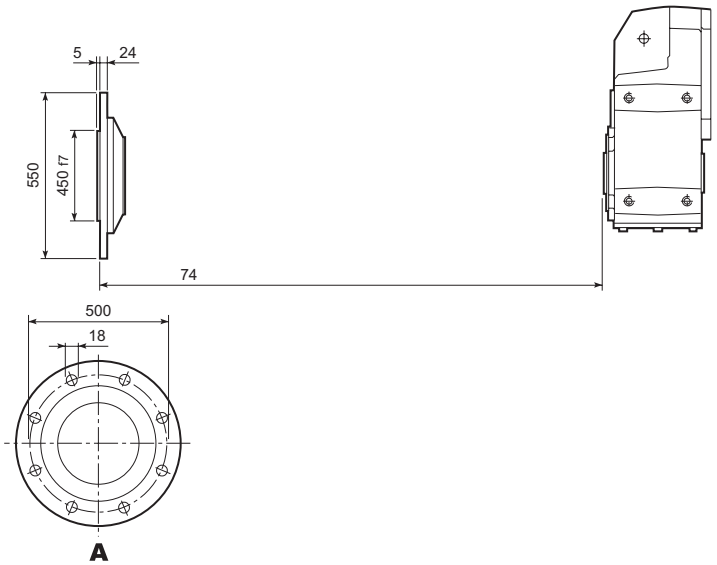

65 附件

抗震组件

如客户要求，F系列的减速机提供抗震组件。
包括空心轴安装所需的所有零件（扭力臂除外）。
相关尺寸请参看下图。

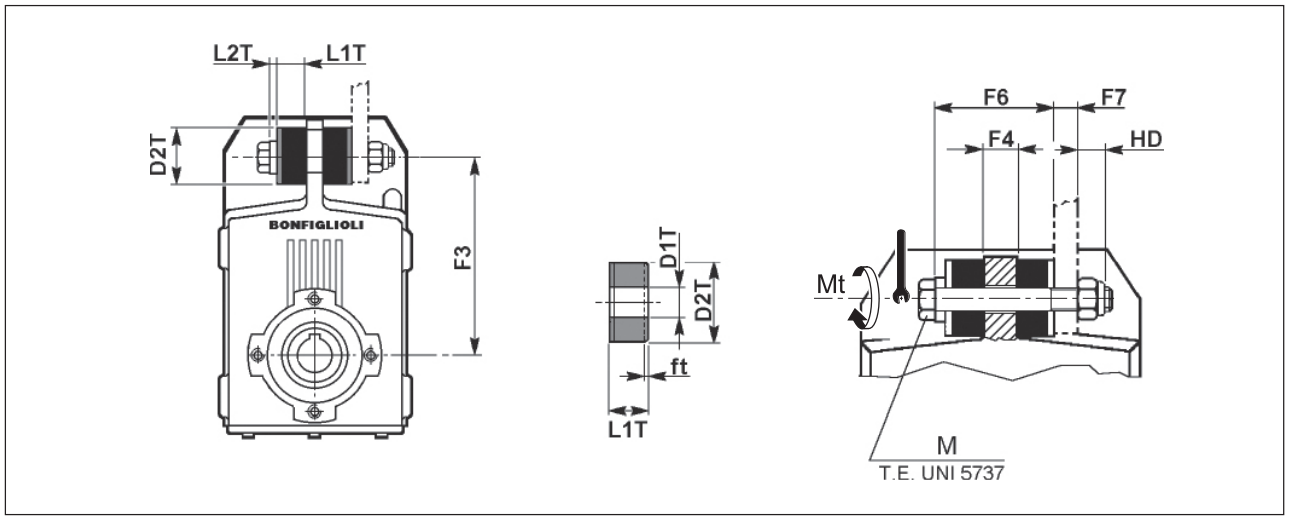

	F3	F4	F6	F7 (max.)	HD	L1T	L2T	D1T	D2T	M	Mt [Nm]	ft
F 10	140	20	55	10	12.3	15	5	11	30	M10x80	10	1.5
F 20	160	20	55	10	12.3	15	5	11	30	M10x80	10	1.5
F 25	162	20	65	20	14.8	20	5	12.5	40	M12x100	20	1.5
F 31	170	20	65	20	14.8	20	5	12.5	40	M12x100	20	1.5
F 41	218	16	61	24	14.8	20	5	12.5	40	M12x100	20	2.3
F 51	278	20	90	47	23	30	10	21	60	M20x160	50	3.0
F 60	325	26	96	41	23	30	10	21	60	M20x160	50	4.0
F 70	370	30	122	50	28	40	12	25	80	M24x200	100	4.0
F 80	430	36	128	44	28	40	12	25	80	M24x200	100	6.0
F 90	515	40	175	40	33.2	60	15	32	100	M30x260	200	9.0

f_t= 承受额定转矩时橡胶缓冲垫的变形量。

66 与减速机配合的客户轴

为使驱动轴与减速机输出轴配合良好，需符合下表的尺寸要求。

以下所示的结构都可用以传动，但注意根据不同的应用需求，选择对应类型和尺寸的部件。

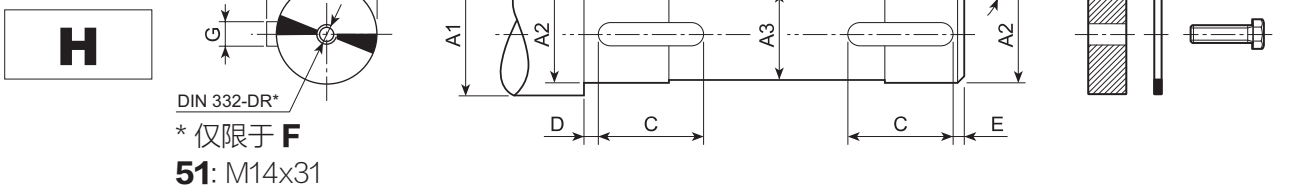

* 仅限于 **F**
51: M14x31

	A1	A2	A3	B	B1	B2	C	D	E	F	G	R	S	UNI 6604	UNI 5739
F 10	≥ 35	30 h7	29	87.5	15.5	56.5	20	2	2	33	8 h9	0.5	1.5	8x7x20 A	M8x25
	≥ 30	25 h7	24	87.5	15.5	56.5	20	2	2	28	8 h9	0.5	1.5	8x7x20 A	
F 20	≥ 42	35 h7	34	99	18	63	22	2	2	38	10 h9	0.5	1.5	10x8x22 A	M8x30
	≥ 35	30 h7	29	99	18	63	22	2	2	33	8 h9	0.5	1.5	8x7x22 A	
F 25	≥ 47	40 h7	39	104	23	58	30	2	2	43	12 h9	0.5	1.5	12x8x30 A	M8x30
	≥ 42	35 h7	34	104	23	58	30	2	2	38	10 h9	0.5	1.5	10x8x30 A	
F 31	≥ 47	40 h7	39	104	28	48	30	2	2	43	12 h9	0.5	1.5	12x8x30 A	M8x30
	≥ 42	35 h7	34	104	28	48	30	2	2	38	10 h9	0.5	1.5	10x8x30 A	
F 41	≥ 52	45 h7	44	118	27.5	63	45	2.5	2.5	48.5	14 h9	1	2.0	14x9x45 A	M10x30
	≥ 47	40 h7	39	118	27.5	63	45	2.5	2.5	43	12 h9	1	2.0	12x8x45 A	
F 51	≥ 63	55 h7	54	139	33	73	50	2.5	2.5	59	16 h9	1	2.0	16x10x50 A	M14x45
	≥ 57	50 h7	49	139	33	73	50	2.5	2.5	53.5	14 h9	1	2.0	14x9x50 A	
F 60	≥ 78	70 h7	69	180	38	104	70	2.5	2.5	74.5	20 h9	1	2.0	20x12x70 A	M16x45
	≥ 68	60 h7	59	180	38	104	70	2.5	2.5	64	18 h9	1	2.0	18x11x70 A	
F 70	≥ 89	80 h7	79	229	58	113	75	3	3	85	22 h9	2.5	2.5	22x14x75 A	M20x55
	≥ 78	70 h7	69	229	58	113	75	3	3	74.5	20 h9	2.5	2.5	20x12x75 A	
F 80	≥ 99	90 h7	89	272	78	116	100	3	3	95	25 h9	2.5	2.5	25x14x100 A	M20x55
	v 89	80 h7	79	272	78	116	100	3	3	85	22 h9	2.5	2.5	22x14x100 A	
F 90	≥ 111	100 h7	99	333	87.5	158	110	3	3	106	28 h9	2.5	2.5	28x16x110 A	M24x65
	≥ 99	90 h7	89	333	87.5	158	110	3	3	95	25 h9	2.5	2.5	25x14x110 A	

S

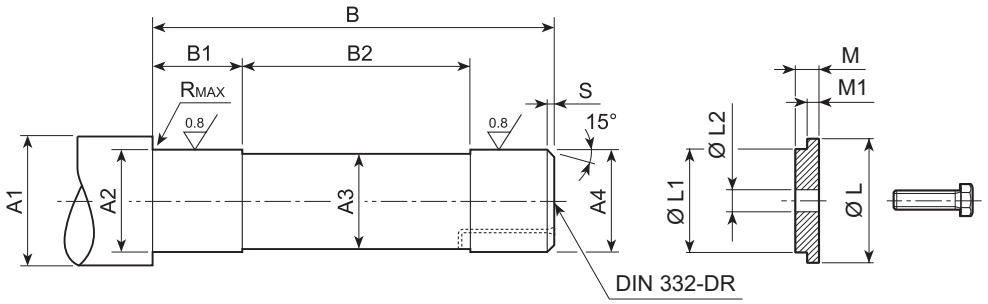

	A1	A2	A3	A4	B	B1	B2	R	S	L	L1	L2	M	M1	UNI 5739
F 10	≥ 36	27 h7	24	25 h6	138	34	70	0.5	1.5	29.5	25 d9	9	7	5.5	M8x25
F 20	≥ 42	32 h7	29	30 h6	160	38	84	0.5	1.5	35.5	30 d9	9	7	5.5	M8x25
F 25	≥ 42	32 h7	30	31 h6	172	38	96	0.5	1.5	35.5	31 d9	9	7	5.5	M8x25
F 31	≥ 50	38 h7	35	36 h6	155	40	73	1	2	43	36 d9	9	7	5.5	M8x25
F 41	≥ 58	44 h7	41	42 h6	177	46.5	82	1	2	49	42 d9	11	8.5	7	M10x30
F 51	≥ 68	54 h7	51	52 g6	201	48	91	1	2	61	52 d9	18	9	7.5	M16x45
F 60	≥ 84	67 h7	64	65 g6	248	53	133	1.5	2	80	65 d9	18	9	7.5	M16x45
F 70	≥ 104	82 h7	79	80 g6	308	78	140	2.5	2.5	95	80 d9	22	13.5	12	M20x55
F 80	≥ 114	92 h7	89	90 g6	365	88	177	2.5	2.5	105	90 d9	22	13.5	12	M20x55
F 90	≥ 126	102 h7	99	100 g6	429.5	98	221.5	2.5	2.5	120	100 d9	26	20	18.5	M24x70

QF

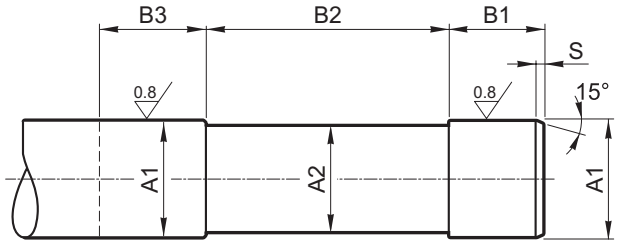

		A1	A2	B1	B2	B3	S
F 10	**QF25**	25 h6	24	41	83	≥ 50	1.5
	QF30	30 h6	29				
F 20	**QF25**	25 h6	24	41	104.5	≥ 50	1.5
	QF30	30 h6	29				
F 25	**QF30**	30 h6	29	41	120.5	≥ 50	1.5
	QF32	32 h6	31				
F 31	**QF35**	35 h6	34	45	95.5	≥ 54	1.5
	QF40	40 h6	39				
F 41	**QF42**	42 h6	41	46	112.5	≥ 55	2
	QF45	45 h6	44				
F 51	**QF50**	50 h6	49	48	131	≥ 57	2
	QF55	55 h6	54				
F 60	**QF60**	60 h6	59	57	158	≥ 66	2.5
	QF65	65 h6	64				
	QF70	70 h6	69				

67 设计特点

主要设计特点如下：
- 模块化
- 结构紧凑
- 安装方式多样
- 效率高
- 低噪音
- 表面渗碳硬化处理齿轮
- 10,20,30机座采用铝制箱体，更大的机座采用高强度的铸铁箱体
- 输入和输出轴由优质钢制成

(E 60)

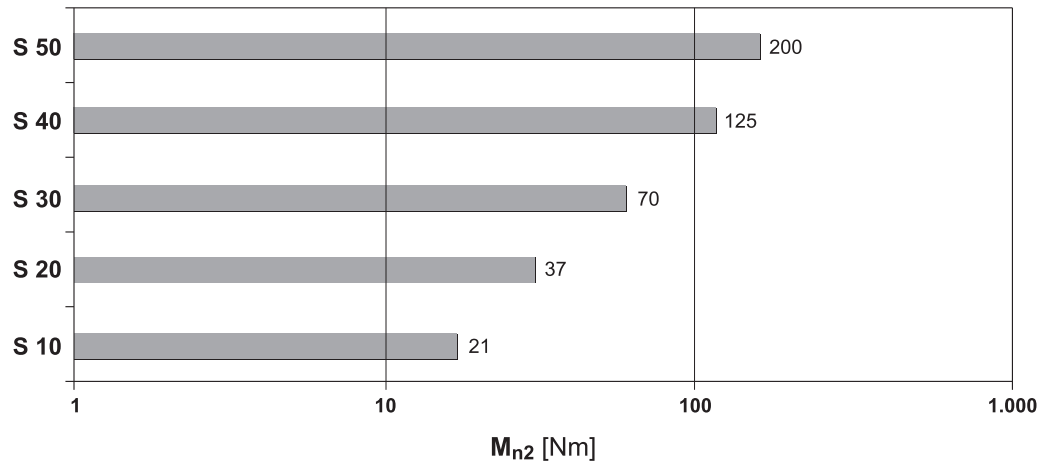

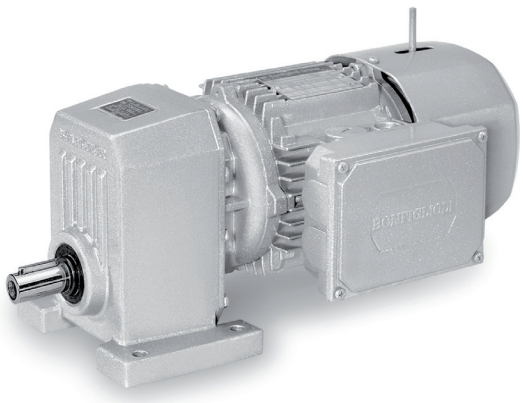

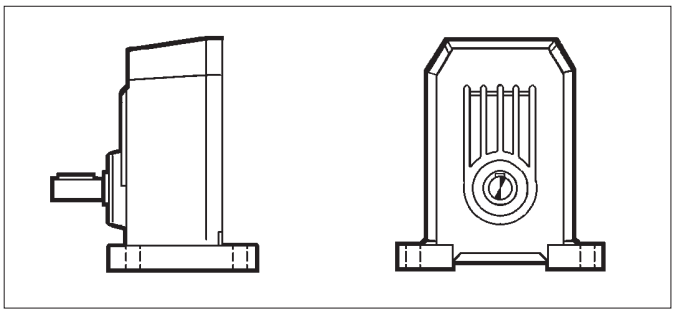

P

地脚安装

S 10 ... S 50

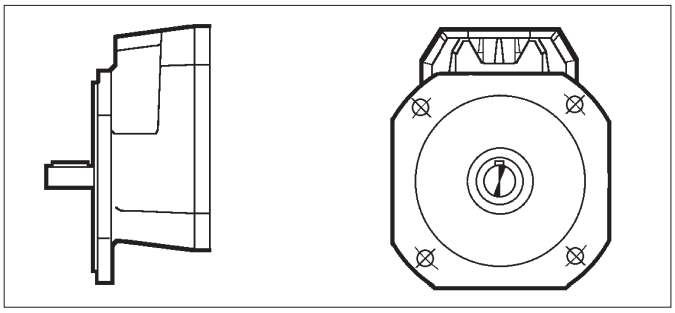

F

法兰安装

S 10 ... S 50

69 命名

减速机

S 10 1 P 1.4 S1 B3 .....

选项

安装位置
S...P: **B3** (标准), **B6, B7, B8, V5, V6**
S...F: **B5** (标准), **B51, B52, B53, V1, V3**

输入结构

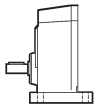

S05	S3
S1	S4
S2	S5

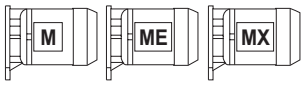

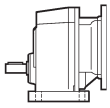

IEC_

P63	P112
P71	P132
P80	P160
P90	P180
P100	

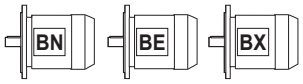

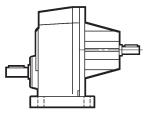

HS

速比

减速机结构形式

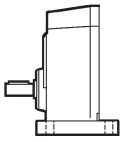

P

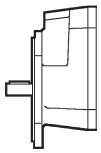

F

传动级数
1

减速机机座号
10, 20, 30, 40, 50

型号: **S** = 单级传动斜齿轮减速机

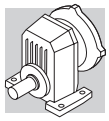

电机 制动器

M 1LA 4 230/400-50 IP54 CLF ..... **W FD** 7.5 R SB 220 SA .....

选项

制动电压

整流器型号
NB, SB, NBR, SBR

制动器手动释放手柄
R, RM

制动转矩

制动器类型
FD (直流制动器)
FA (交流制动器)

电机接线盒位置
W (默认), **N, E, S**

电机与减速机连接方式
— (紧凑型电机)
B5 (IEC电机)

绝缘等级
CL F 标准
CL H 可选

防护等级
IP55 标准 (**IP54** – 制动电机)

电压 – 频率

电机极数
2, 4, 6, 2/4, 2/6, 2/8, 2/12, 4/6, 4/8

电机机座号
0B – 5LA (紧凑型电机)
63A – 280M (IEC 电机)

电机型号
MX = 紧凑型高效三相电机(IE3) **ME** = 紧凑型高效三相电机(IE2) **M** = 紧凑型三相电机
BX = IEC 高效三相电机(IE3) **BE** = IEC 高效三相电机(IE2) **BN** = IEC 三相电机

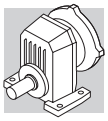

69.1 减速机选项

SO
对于机座S10，S20，S30和S40的减速机（通常出厂时已加油），这个选项表示供货时不加油。

LO
对于机座S50减速机（通常出厂时不加油），这个选项表示供货时根据安装位置，加邦飞利使用的合成油。

DV
输入轴采用双油封（仅对一体化减速电机适用）。

VV
输入轴采用氟橡胶材质的油封。

PV
输入输出轴都采用氟橡胶材质的油封。

表面保护

如果没有特别的防护等级要求，减速机表面的耐腐蚀等级至少达到C2 (UNI EN ISO 12944-2)，如果要求更高，可以提供C3和C4等级。

(E 61)

表面保护	典型环境	最高表面温度.	按UNI EN ISO 12944-2对腐蚀进行分类
C3	城市和工业环境，相对湿度高达100%的（中等空气污染）	120°C	C3
C4	工业区、沿海地区、化工厂，相对湿度高达100%的（重度空气污染）	120°C	C4

C3或C4保护等级的减速机颜色有多种选择。如果没有特定的要求（见“喷漆”选项），默认颜色为RAL 7042。
另外也可以提供C5等级（UNI EN ISO 12944-2）。详细情况请联系我们的技术服务部门。

喷漆

下表为减速机表面保护等级为C3或C4时可选用的颜色。

(E 62)

油漆	颜色	RAL 号码
RAL7042*	交通灰A	7042
RAL5010	龙胆蓝	5010
RAL9005	乌黑	9005
RAL9006	铝白色	9006
RAL9010	纯白色	9010

* 如没指定颜色，减速机按标准颜色供货。

说明– “喷漆”选项只能和“表面保护”选项结合选择。

认证

AC – 符合性证明
此文件证明产品符合采购订单以及邦飞利质量体系的适用程序。

CC – 检查证明
此文件要求检查订单的合规性，产品外观和配合尺寸；
以及无负载情况下主要的功能性参数，和在静态和动态时油封的密封性。
被检查的产品取样于同一海运批次并单独做好标记。

69.2 电机选项

AL, AR
电机部分的逆止器参见本样本中电机章节，并且应用于一体式M,ME电机或MX。
下表为基于不同选项对应的减速机可转动方向。

(E 63)

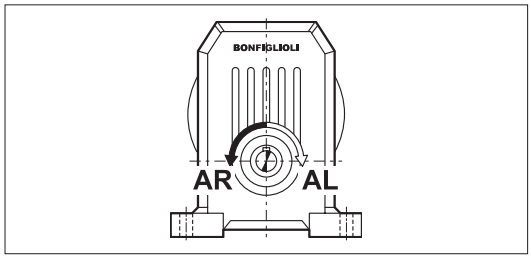

更多信息请咨询邦飞利电机部门。

70 安装位置和接线盒位置

从风扇端看电机可以确定电机接线盒的位置；标准位置以黑字表示 (W)。

制动器手动释放杆的角度位置

除非另有说明，否则制动电机的手动释放装置位于接线盒90°位置。
不同角度可以通过相应的选项来指定。

(E 64)

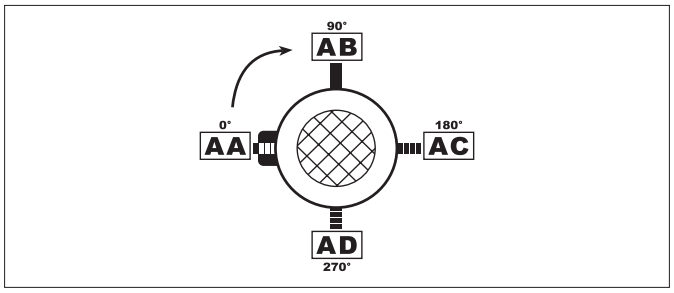

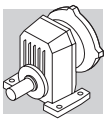

S ... P

B3

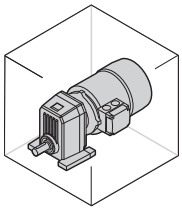
_S

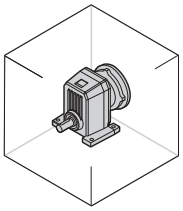
_P(IEC)

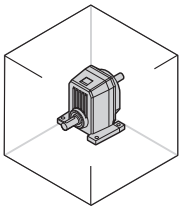
_HS

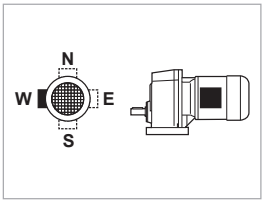

B6

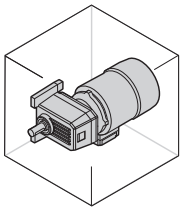
_S

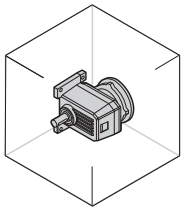
_P(IEC)

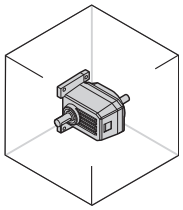
_HS

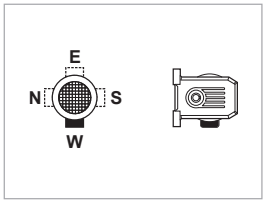

B7

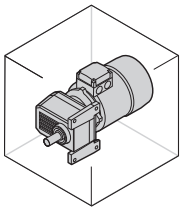
_S

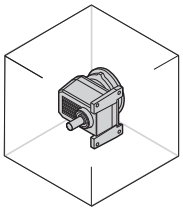
_P(IEC)

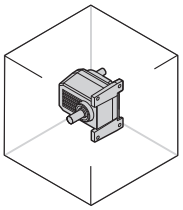
_HS

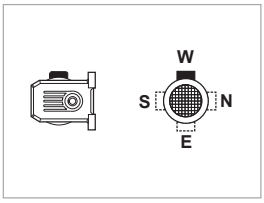

B8

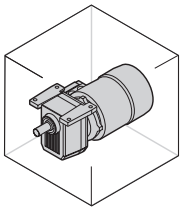
_S

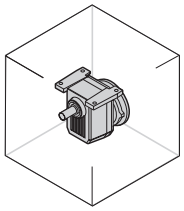
_P(IEC)

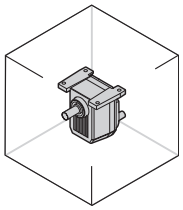
_HS

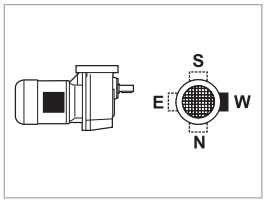

V5

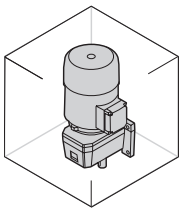
_S

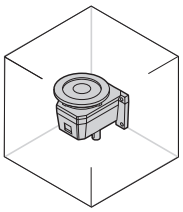
_P(IEC)

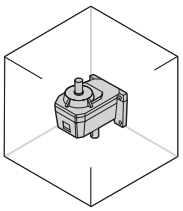
_HS

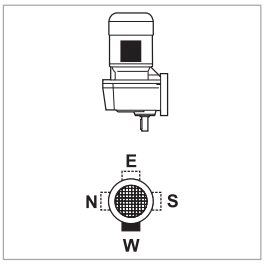

V6

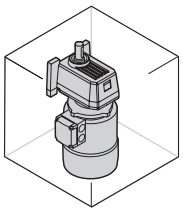
_S

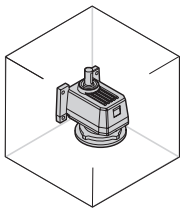
_P(IEC)

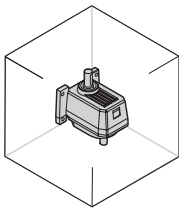
_HS

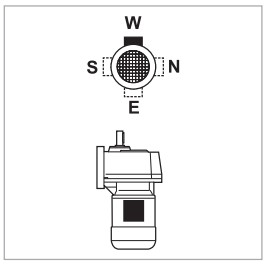

W = Default

Bonfiglioli Riduttori

S ... F

B5

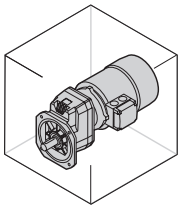
_S

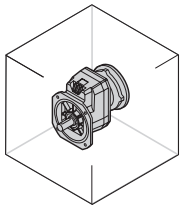
_P(IEC)

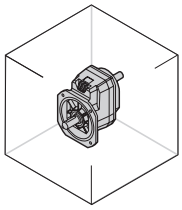
_HS

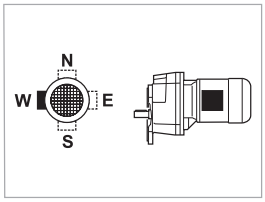

B51

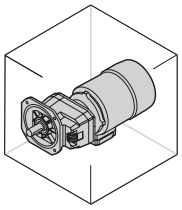
_S

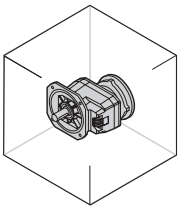
_P(IEC)

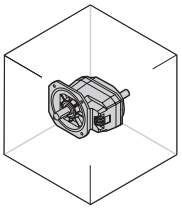
_HS

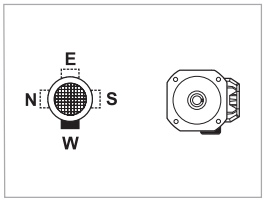

B53

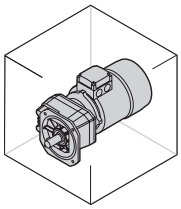
_S

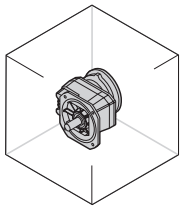
_P(IEC)

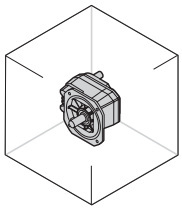
_HS

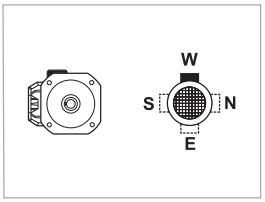

B52

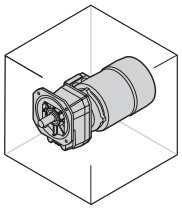
_S

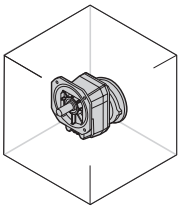
_P(IEC)

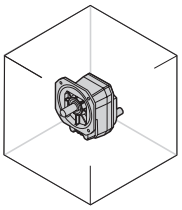
_HS

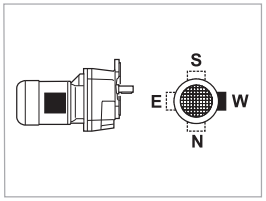

V1

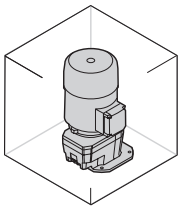
_S

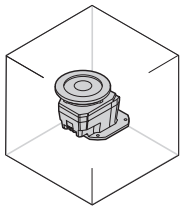
_P(IEC)

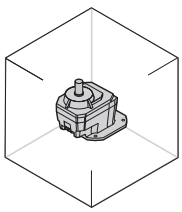
_HS

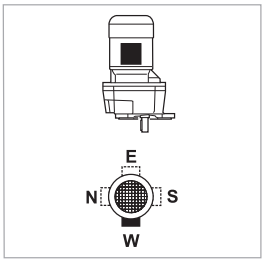

V3

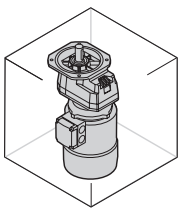
_S

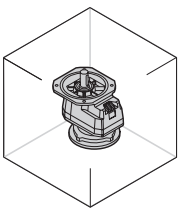
_P(IEC)

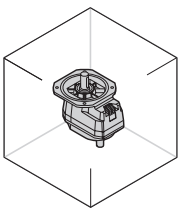
_HS



W = Default

71 悬臂载荷

作用于输入轴/输出轴上的扭矩将在相应的轴上产生径向力。轴的合成力必须与轴承和轴的许用载荷相一致。也就是说轴所受的力（R_{c1}为输入轴，R_{c2}为输出轴）必须小于或等于许用的悬臂载荷（R_{n1}为输入轴，R_{n2}为输出轴）。许用悬臂载荷在减速机选型表列出。
下面给出的公式中，下标1指输入轴，下标2指输出轴。外部传动产生的载荷可以通过下面的公式近似求出：

$$R_{c1}[N] = \frac{2000 \cdot M_1[Nm] \cdot K_r}{d\,[mm]} \quad ; \quad R_{c2}[N] = \frac{2000 \cdot M_2[Nm] \cdot K_r}{d\,[mm]} \qquad (44)$$

(E 65)

M_1 [Nm]	输入轴所受的转矩
M_2 [Nm]	输出轴所受的转矩
d [mm]	连接到轴上部件的节径
K_r = 1	链条传动

K_r = 1,25	齿轮传动
K_r = 1,5	三角皮带传动
K_r = 2,0	平皮带传动

悬臂载荷的校核根据作用在轴中点或远端而不同：

(E 66)

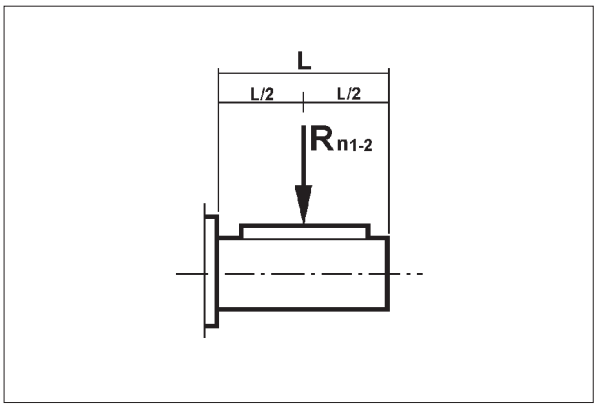

(E 67)

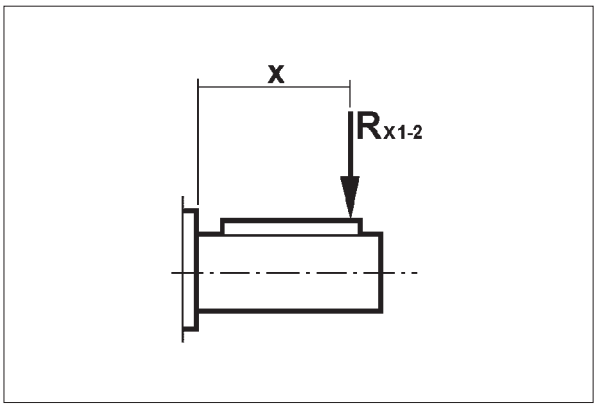

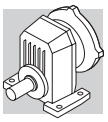

a)径向力作用在轴中点，表(E66)

轴的径向力与样本的许用悬臂载荷比较应该用以下条件校核：
Rc1≤ Rn1 [输入轴]

或

Rc2≤ Rn2 [输出轴]

b) 径向力不作用在轴中点，表(E67)

当载荷作用在距轴肩“x”的地方，许用载荷必须针对这个位置计算。
修正的许用悬臂载荷Rx1（输入）和Rx2（输出）可分别通过原始额定值Rn1和Rn2与如下系数计算出来：

$$\frac{a}{b+x} \qquad (45)$$

(E 68)

	负载位置系数					
	输出轴			输入轴		
	a	**b**	**c**	**a**	**b**	**c**
S 10 1	61	46	200	21	1	300
S 20 1	73.5	53.5	270	40	20	350
S 30 1	91.5	66.5	380	38.5	18.5	350
S 40 1	126.5	96.5	600	49.5	24.5	450
S 50 1	153.5	113.5	680	49.5	24.5	450

校核程序如下：

输入轴

计算：

$$R_{x1} = R_{n1} \cdot \frac{a}{b+x} \qquad (46)$$

X需要满足的条件：

$$\frac{L}{2} \le x \le c \qquad (47)$$

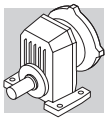

最后必须校核下列条件：

$$R_{c1} \leq R_{x1} \tag{48}$$

输出轴

计算：

$$R_{x2} = R_{n2} \cdot \frac{a}{b + x} \tag{49}$$

X需要满足的条件：

$$\frac{L}{2} \leq x \leq c \tag{50}$$

最后必须校核下列条件：

$$R_{c2} \leq R_{x2} \tag{51}$$

72 轴向载荷A_{n1}, A_{n2}

输入输出轴许用轴向载荷A_{n1}和A_{n2}可分别由输入输出径向载荷R_{n1}和R_{n2}，通过以下公式计算得出：

$$A_{n1} = R_{n1} \cdot 0.2$$
$$A_{n2} = R_{n2} \cdot 0.2 \tag{52}$$

以上公式也适用轴向径向载荷同时作用的情况。仅当没有悬臂载荷作用时，许用轴向载荷A_n等于额定悬臂载荷R_n的50%。
如果轴向载荷超过许用值或大于径向载荷，请联系邦飞利连通力对具体应用进行深入分析。

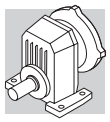

73 减速电机选型表

不带制动器的电机选型时需要考虑 EC 640/2009标准 (见本样本的M章节)，当电机额定功率大于0.75KW时，BN/M电机都可选。
考虑到EC 640/2009标准并不适用带制动器的电机，所以制动电机只有BN/M电机可选，不包括BX, BE, MX和ME电机。

0.09 kW

n_2 min^{-1}	M_2 Nm	S	i	R_{n2} N	IE1		IEC IE1	
69	12.1	2.9	13.1	2400			**S301_13.1 P63 BN63A6**	487
73	11.5	1.7	12.4	1500	**S201_12.4 S05 M05A6**	484	**S201_12.4 P63 BN63A6**	485
74	11.4	1.1	12.3	1160	**S101_12.3 S05 M05A6**	482	**S101_12.3 P63 BN63A6**	483
85	10.0	2.0	10.8	1500	**S201_10.8 S05 M05A6**	484	**S201_10.8 P63 BN63A6**	485
88	9.5	1.3	10.3	1100	**S101_10.3 S05 M05A6**	482	**S101_10.3 P63 BN63A6**	483
103	8.2	1.5	8.9	1060	**S101_8.9 S05 M05A6**	482	**S101_8.9 P63 BN63A6**	483
107	7.9	2.5	8.5	1500	**S201_8.5 S05 M05A6**	484	**S201_8.5 P63 BN63A6**	485
132	6.4	2.7	6.9	990	**S101_6.9 S05 M05A6**	482	**S101_6.9 P63 BN63A6**	483
149	5.7	3.0	6.1	960	**S101_6.1 S05 M05A6**	482	**S101_6.1 P63 BN63A6**	483
193	4.4	3.2	4.7	890	**S101_4.7 S05 M05A6**	482	**S101_4.7 P63 BN63A6**	483
237	3.6	3.9	3.8	830	**S101_3.8 S05 M05A6**	482	**S101_3.8 P63 BN63A6**	483
284	3.0	4.7	3.2	790	**S101_3.2 S05 M05A6**	482	**S101_3.2 P63 BN63A6**	483
364	2.3	5.2	2.5	730	**S101_2.5 S05 M05A6**	482	**S101_2.5 P63 BN63A6**	483
485	1.7	6.9	1.9	670	**S101_1.9 S05 M05A6**	482	**S101_1.9 P63 BN63A6**	483
640	1.3	9.1	1.4	610	**S101_1.4 S05 M05A6**	482	**S101_1.4 P63 BN63A6**	483

0.12 kW

n_2 min^{-1}	M_2 Nm	S	i	R_{n2} N	IE1		IEC IE1	
69	16.2	2.2	13.1	2400			**S301_13.1 P63 BN63A4**	487
73	15.3	1.3	12.4	1500	**S201_12.4 S05 M05B6**	484	**S201_12.4 P63 BN63B6**	485
85	13.3	1.5	10.8	1500	**S201_10.8 S05 M05B6**	484	**S201_10.8 P63 BN63B6**	485
88	12.7	2.8	10.3	2400			**S301_10.3 P63 BN63B6**	487
88	12.7	0.9	10.3	1060	**S101_10.3 S05 M05B6**	482	**S101_10.3 P63 BN63B6**	483
102	11.0	3.2	8.9	2400			**S301_8.9 P63 BN63B6**	487
103	11.0	1.1	8.9	1030	**S101_8.9 S05 M05B6**	482	**S101_8.9 P63 BN63B6**	483
107	10.5	2.8	13.1	2400			**S301_13.1 P63 BN63B6**	487
107	10.5	1.9	8.5	1500	**S201_8.5 S05 M05B6**	484	**S201_8.5 P63 BN63B6**	485
113	10.0	1.7	12.4	1500	**S201_12.4 S05 M05A4**	484	**S201_12.4 P63 BN63A4**	485
114	9.9	1.0	12.3	1000	**S101_12.3 S05 M05A4**	482	**S101_12.3 P63 BN63A4**	483
126	8.9	3.4	7.2	1500	**S201_7.2 S05 M05B6**	484	**S201_7.2 P63 BN63B6**	485
130	8.6	2.0	10.8	1500	**S201_10.8 S05 M05A4**	484	**S201_10.8 P63 BN63A4**	485
132	8.5	2.0	6.9	960	**S101_6.9 S05 M05B6**	482	**S101_6.9 P63 BN63B6**	483
136	8.3	1.2	10.3	960	**S101_10.3 S05 M05A4**	482	**S101_10.3 P63 BN63A4**	483
149	7.5	2.3	6.1	940	**S101_6.1 S05 M05B6**	482	**S101_6.1 P63 BN63B6**	483

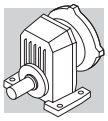

0.12 kW

n_2 min^{-1}	M_2 Nm	S	i	R_{n2} N	IE1		IEC IE1	
158	7.1	1.4	8.9	920	**S101_8.9 S05 M05A4**	482	**S101_8.9 P63 BN63A4**	483
165	6.8	2.5	8.5	1500	**S201_8.5 S05 M05A4**	484	**S201_8.5 P63 BN63A4**	485
193	5.8	2.4	4.7	870	**S101_4.7 S05 M05B6**	482	**S101_4.7 P63 BN63B6**	483
203	5.5	2.7	6.9	860	**S101_6.9 S05 M05A4**	482	**S101_6.9 P63 BN63A4**	483
229	4.9	3.1	6.1	830	**S101_6.1 S05 M05A4**	482	**S101_6.1 P63 BN63A4**	483
237	4.7	2.9	3.8	820	**S101_3.8 S05 M05B6**	482	**S101_3.8 P63 BN63B6**	483
284	3.9	3.5	3.2	780	**S101_3.2 S05 M05B6**	482	**S101_3.2 P63 BN63B6**	483
296	3.8	3.2	4.7	770	**S101_4.7 S05 M05A4**	482	**S101_4.7 P63 BN63A4**	483
364	3.1	3.9	3.8	720	**S101_3.8 S05 M05A4**	482	**S101_3.8 P63 BN63A4**	483
364	3.1	3.9	2.5	720	**S101_2.5 S05 M05B6**	482	**S101_2.5 P63 BN63B6**	483
438	2.6	4.7	3.2	680	**S101_3.2 S05 M05A4**	482	**S101_3.2 P63 BN63A4**	483
485	2.3	5.2	1.9	660	**S101_1.9 S05 M05B6**	482	**S101_1.9 P63 BN63B6**	483
560	2.0	5.0	2.5	630	**S101_2.5 S05 M05A4**	482	**S101_2.5 P63 BN63A4**	483
640	1.8	6.8	1.4	600	**S101_1.4 S05 M05B6**	482	**S101_1.4 P63 BN63B6**	483
747	1.5	6.6	1.9	580	**S101_1.9 S05 M05A4**	482	**S101_1.9 P63 BN63A4**	483
985	1.1	8.8	1.4	530	**S101_1.4 S05 M05A4**	482	**S101_1.4 P63 BN63A4**	483

0.18 kW

n_2 min^{-1}	M_2 Nm	S	i	R_{n2} N	IE1		IEC IE1	
69	24.6	1.4	13.1	2400			**S301_13.1 P71 BN71A6**	487
73	23.2	2.5	12.4	3800	**S401_12.4 S1 M1SC6**	488	**S401_12.4 P71 BN71A6**	489
84	20.1	1.0	10.8	1500			**S201_10.8 P71 BN71A6**	485
84	20.0	2.9	10.7	3800	**S401_10.7 S1 M1SC6**	488	**S401_10.7 P71 BN71A6**	489
87	19.3	1.8	10.3	2400	**S301_10.3 S1 M1SC6**	486	**S301_10.3 P71 BN71A6**	487
101	16.6	2.1	8.9	2400	**S301_8.9 S1 M1SC6**	486	**S301_8.9 P71 BN71A6**	487
106	15.9	1.3	8.5	1500	**S201_8.5 S1 M1SC6**	484	**S201_8.5 P71 BN71A6**	485
106	15.9	1.9	13.1	2400			**S301_13.1 P63 BN63B4**	487
112	15.1	1.1	12.4	1500	**S201_12.4 S05 M05B4**	484	**S201_12.4 P63 BN63B4**	485
112	15.0	3.3	12.4	3800			**S401_12.4 P63 BN63B4**	489
125	13.5	2.2	7.2	1500	**S201_7.2 S1 M1SC6**	484	**S201_7.2 P71 BN71A6**	485
129	13.0	1.3	10.8	1500	**S201_10.8 S05 M05B4**	484	**S201_10.8 P63 BN63B4**	485
130	12.9	1.3	6.9	910	**S101_6.9 S1 M1SC6**	482	**S101_6.9 P71 BN71A6**	483
135	12.5	2.4	10.3	2330			**S301_10.3 P63 BN63B4**	487
147	11.4	1.5	6.1	890	**S101_6.1 S1 M1SC6**	482	**S101_6.1 P71 BN71A6**	483
155	10.9	2.8	5.8	1500	**S201_5.8 S1 M1SC6**	484	**S201_5.8 P71 BN71A6**	485
156	10.8	2.8	8.9	2230			**S301_8.9 P63 BN63B4**	487
157	10.8	0.9	8.9	880	**S101_8.9 S05 M05B4**	482	**S101_8.9 P63 BN63B4**	483
164	10.3	1.7	8.5	1500	**S201_8.5 S05 M05B4**	484	**S201_8.5 P63 BN63B4**	485
189	8.9	3.4	4.8	1500	**S201_4.8 S1 M1SC6**	484	**S201_4.8 P71 BN71A6**	485
190	8.8	1.6	4.7	830	**S101_4.7 S1 M1SC6**	482	**S101_4.7 P71 BN71A6**	483
192	8.8	3.0	7.2	1500	**S201_7.2 S05 M05B4**	484	**S201_7.2 P63 BN63B4**	485
201	8.4	1.8	6.9	820	**S101_6.9 S05 M05B4**	482	**S101_6.9 P63 BN63B4**	483
214	7.9	3.1	13.1	2020			**S301_13.1 P63 BN63A2**	487
226	7.5	1.7	12.4	1480	**S201_12.4 S05 M05A2**	484	**S201_12.4 P63 BN63A2**	485
227	7.4	2.0	6.1	800	**S101_6.1 S05 M05B4**	482	**S101_6.1 P63 BN63B4**	483
228	7.4	1.1	12.3	800	**S101_12.3 S05 M05A2**	482	**S101_12.3 P63 BN63A2**	483
234	7.2	1.9	3.8	790	**S101_3.8 S1 M1SC6**	482	**S101_3.8 P71 BN71A6**	483
261	6.4	2.0	10.8	1420	**S201_10.8 S05 M05A2**	484	**S201_10.8 P63 BN63A2**	485
273	6.2	1.3	10.3	760	**S101_10.3 S05 M05A2**	482	**S101_10.3 P63 BN63A2**	483
281	6.0	2.3	3.2	750	**S101_3.2 S1 M1SC6**	482	**S101_3.2 P71 BN71A6**	483
294	5.7	2.1	4.7	750	**S101_4.7 S05 M05B4**	482	**S101_4.7 P63 BN63B4**	483
317	5.3	1.5	8.9	730	**S101_8.9 S05 M05A2**	482	**S101_8.9 P63 BN63A2**	483

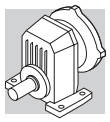

0.18 kW

n_2 min^{-1}	M_2 Nm	S	i	R_{n2} N	IE1		IEC IE1	
331	5.1	2.6	8.5	1320	**S201_8.5 S05 M05A2**	484	**S201_8.5 P63 BN63A2**	485
360	4.7	2.6	2.5	700	**S101_2.5 S1 M1SC6**	482	**S101_2.5 P71 BN71A6**	483
361	4.7	2.6	3.8	700	**S101_3.8 S05 M05B4**	482	**S101_3.8 P63 BN63B4**	483
407	4.1	2.9	6.9	680	**S101_6.9 S05 M05A2**	482	**S101_6.9 P63 BN63A2**	483
434	3.9	3.1	3.2	670	**S101_3.2 S05 M05B4**	482	**S101_3.2 P63 BN63B4**	483
460	3.7	3.3	6.1	660	**S101_6.1 S05 M05A2**	482		
480	3.5	3.4	1.9	640	**S101_1.9 S1 M1SC6**	482	**S101_1.9 P71 BN71A6**	483
556	3.0	3.3	2.5	620	**S101_2.5 S05 M05B4**	482	**S101_2.5 P63 BN63B4**	483
594	2.8	3.5	4.7	610	**S101_4.7 S05 M05A2**	482	**S101_4.7 P63 BN63A2**	483
633	2.7	4.5	1.4	590	**S101_1.4 S1 M1SC6**	482	**S101_1.4 P71 BN71A6**	483
731	2.3	4.3	3.8	570	**S101_3.8 S05 M05A2**	482	**S101_3.8 P63 BN63A2**	483
741	2.3	4.4	1.9	570	**S101_1.9 S05 M05B4**	482	**S101_1.9 P63 BN63B4**	483
878	1.9	5.2	3.2	540	**S101_3.2 S05 M05A2**	482	**S101_3.2 P63 BN63A2**	483
978	1.7	5.8	1.4	520	**S101_1.4 S05 M05B4**	482	**S101_1.4 P63 BN63B4**	483
1124	1.5	5.3	2.5	500	**S101_2.5 S05 M05A2**	482	**S101_2.5 P63 BN63A2**	483
1499	1.1	7.1	1.9	460	**S101_1.9 S05 M05A2**	482	**S101_1.9 P63 BN63A2**	483
1977	0.9	9.4	1.4	420	**S101_1.4 S05 M05A2**	482	**S101_1.4 P63 BN63A2**	483

0.25 kW

n_2 min^{-1}	M_2 Nm	S	i	R_{n2} N	IE1		IEC IE1	
69	34.1	1.0	13.1	2400			**S301_13.1 P71 BN71B6**	487
70	33.5	3.0	12.9	6520	**S501_12.9 S1 M1SD6**	490	**S501_12.9 P71 BN71B6**	491
73	32.2	1.8	12.4	3800	**S401_12.4 S1 M1SD6**	488	**S401_12.4 P71 BN71B6**	489
84	27.7	2.1	10.7	3800	**S401_10.7 S1 M1SD6**	488	**S401_10.7 P71 BN71B6**	489
87	26.8	1.3	10.3	2400	**S301_10.3 S1 M1SD6**	486	**S301_10.3 P71 BN71B6**	487
101	23.1	1.5	8.9	2400	**S301_8.9 S1 M1SD6**	486	**S301_8.9 P71 BN71B6**	487
104	22.5	3.1	8.6	3800	**S401_8.6 S1 M1SD6**	488	**S401_8.6 P71 BN71B6**	489
105	22.3	1.3	13.1	2400			**S301_13.1 P71 BN71A4**	487
106	22.1	0.9	8.5	1500	**S201_8.5 S1 M1SD6**	484	**S201_8.5 P71 BN71B6**	485
111	21.1	2.4	12.4	3800			**S401_12.4 P71 BN71A4**	489
125	18.8	1.6	7.2	1500	**S201_7.2 S1 M1SD6**	484	**S201_7.2 P71 BN71B6**	485
127	18.4	3.1	7.1	2340	**S301_7.1 S1 M1SD6**	486	**S301_7.1 P71 BN71B6**	487
128	18.3	0.9	10.8	1500	**S201_10.8 S05 M05C4**	484	**S201_10.8 P71 BN71A4**	485
129	18.2	2.8	10.7	3800			**S401_10.7 P71 BN71A4**	489
130	17.9	0.9	6.9	850	**S101_6.9 S1 M1SD6**	482	**S101_6.9 P71 BN71B6**	483
133	17.5	1.7	10.3	2300			**S301_10.3 P71 BN71A4**	487
147	15.9	1.1	6.1	840	**S101_6.1 S1 M1SD6**	482	**S101_6.1 P71 BN71B6**	483
155	15.1	2.0	5.8	1500	**S201_5.8 S1 M1SD6**	484	**S201_5.8 P71 BN71B6**	485
155	15.1	2.0	8.9	2200			**S301_8.9 P71 BN71A4**	487
162	14.5	1.2	8.5	1500	**S201_8.5 S05 M05C4**	484	**S201_8.5 P71 BN71A4**	485
189	12.4	2.4	4.8	1500	**S201_4.8 S1 M1SD6**	484	**S201_4.8 P71 BN71B6**	485
190	12.3	1.1	4.7	790	**S101_4.7 S1 M1SD6**	482	**S101_4.7 P71 BN71B6**	483
190	12.3	2.1	7.2	1500	**S201_7.2 S05 M05C4**	484	**S201_7.2 P71 BN71A4**	485
199	11.7	1.3	6.9	780	**S101_6.9 S05 M05C4**	482	**S101_6.9 P71 BN71A4**	483
214	10.9	2.2	13.1	2000			**S301_13.1 P63 BN63B2**	487
225	10.4	1.4	6.1	770	**S101_6.1 S05 M05C4**	482	**S101_6.1 P71 BN71A4**	483
226	10.3	1.3	12.4	1450	**S201_12.4 S05 M05B2**	484	**S201_12.4 P63 BN63B2**	485
229	10.2	2.9	3.9	1440	**S201_3.9 S1 M1SD6**	484	**S201_3.9 P71 BN71B6**	485
234	10.0	1.4	3.8	750	**S101_3.8 S1 M1SD6**	482	**S101_3.8 P71 BN71B6**	483
236	9.9	2.6	5.8	1430	**S201_5.8 S05 M05C4**	484	**S201_5.8 P71 BN71A4**	485
261	9.0	1.5	10.8	1390	**S201_10.8 S05 M05B2**	484	**S201_10.8 P63 BN63B2**	485
273	8.6	2.8	10.3	1860			**S301_10.3 P63 BN63B2**	487

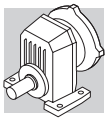

0.25 kW

n_2 min^{-1}	M_2 Nm	S	i	R_{n2} N	IE1		IEC IE1	
273	8.6	0.9	10.3	730	**S101_10.3 S05 M05B2**	482	**S101_10.3 P63 BN63B2**	483
281	8.3	1.7	3.2	720	**S101_3.2 S1 M1SD6**	482	**S101_3.2 P71 BN71B6**	483
288	8.1	3.2	4.8	1350	**S201_4.8 S05 M05C4**	484	**S201_4.8 P71 BN71A4**	485
291	8.0	1.5	4.7	720	**S101_4.7 S05 M05C4**	482	**S101_4.7 P71 BN71A4**	483
316	7.4	3.2	8.9	1770			**S301_8.9 P63 BN63B2**	487
317	7.4	1.1	8.9	710	**S101_8.9 S05 M05B2**	482	**S101_8.9 P63 BN63B2**	483
331	7.1	1.8	8.5	1300	**S201_8.5 S05 M05B2**	484	**S201_8.5 P63 BN63B2**	485
358	6.5	1.8	3.8	680	**S101_3.8 S05 M05C4**	482	**S101_3.8 P71 BN71A4**	483
360	6.5	1.8	2.5	680	**S101_2.5 S1 M1SD6**	482	**S101_2.5 P71 BN71B6**	483
389	6.0	3.5	7.2	1240	**S201_7.2 S05 M05B2**	484	**S201_7.2 P63 BN63B2**	485
407	5.7	2.1	6.9	660	**S101_6.9 S05 M05B2**	482	**S101_6.9 P63 BN63B2**	483
430	5.4	2.2	3.2	650	**S101_3.2 S05 M05C4**	482	**S101_3.2 P71 BN71A4**	483
460	5.1	2.4	6.1	640	**S101_6.1 S05 M05B2**	482	**S101_6.1 P63 BN63B2**	483
480	4.9	2.5	1.9	620	**S101_1.9 S1 M1SD6**	482	**S101_1.9 P71 BN71B6**	483
550	4.3	2.4	2.5	610	**S101_2.5 S05 M05C4**	482	**S101_2.5 P71 BN71A4**	483
594	3.9	2.5	4.7	600	**S101_4.7 S05 M05B2**	482	**S101_4.7 P63 BN63B2**	483
633	3.7	3.2	1.4	580	**S101_1.4 S1 M1SD6**	482	**S101_1.4 P71 BN71B6**	483
731	3.2	3.1	3.8	560	**S101_3.8 S05 M05B2**	482	**S101_3.8 P63 BN63B2**	483
733	3.2	3.1	1.9	560	**S101_1.9 S05 M05C4**	482	**S101_1.9 P71 BN71A4**	483
878	2.7	3.8	3.2	530	**S101_3.2 S05 M05B2**	482	**S101_3.2 P63 BN63B2**	483
968	2.4	4.1	1.4	510	**S101_1.4 S05 M05C4**	482	**S101_1.4 P71 BN71A4**	483
1124	2.1	3.8	2.5	500	**S101_2.5 S05 M05B2**	482	**S101_2.5 P63 BN63B2**	483
1499	1.6	5.1	1.9	450	**S101_1.9 S05 M05B2**	482	**S101_1.9 P63 BN63B2**	483
1977	1.2	6.8	1.4	420	**S101_1.4 S05 M05B2**	482	**S101_1.4 P63 BN63B2**	483

0.37 kW

n_2 min^{-1}	M_2 Nm	S	i	R_{n2} N	IE1		IEC IE1	
71	49.0	2.0	12.9	6420	**S501_12.9 S1 M1LA6**	490	**S501_12.9 P80 BN80A6**	491
73	47.2	1.2	12.4	3800	**S401_12.4 S1 M1LA6**	488	**S401_12.4 P80 BN80A6**	489
85	40.6	1.4	10.7	3800	**S401_10.7 S1 M1LA6**	488	**S401_10.7 P80 BN80A6**	489
87	39.8	2.9	10.5	6020	**S501_10.5 S1 M1LA6**	490	**S501_10.5 P80 BN80A6**	491
102	33.8	1.0	8.9	2400	**S301_8.9 S1 M1LA6**	486	**S301_8.9 P80 BN80A6**	487
104	33.2	0.9	13.1	2390			**S301_13.1 P71 BN71B4**	487
105	32.9	2.1	8.6	3800	**S401_8.6 S1 M1LA6**	488	**S401_8.6 P80 BN80A6**	489
106	32.6	3.1	12.9	5650	**S501_12.9 S1 M1SD4**	490	**S501_12.9 P71 BN71B4**	491
110	31.3	1.6	12.4	3800	**S401_12.4 S1 M1SD4**	488	**S401_12.4 P71 BN71B4**	489
126	27.5	1.1	7.2	1500	**S201_7.2 S1 M1LA6**	484	**S201_7.2 P80 BN80A6**	485
127	27.2	3.3	7.2	3800	**S401_7.2 S1 M1LA6**	488	**S401_7.2 P80 BN80A6**	489
128	27.0	2.1	7.1	2260	**S301_7.1 S1 M1LA6**	486	**S301_7.1 P80 BN80A6**	487
128	27.0	1.9	10.7	3800	**S401_10.7 S1 M1SD4**	488	**S401_10.7 P71 BN71B4**	489
133	26.0	1.2	10.3	2240	**S301_10.3 S1 M1SD4**	486	**S301_10.3 P71 BN71B4**	487
154	22.5	1.3	8.9	2150	**S301_8.9 S1 M1SD4**	486	**S301_8.9 P71 BN71B4**	487
156	22.2	2.6	5.8	2140	**S301_5.8 S1 M1LA6**	486	**S301_5.8 P80 BN80A6**	487
156	22.1	1.4	5.8	1500	**S201_5.8 S1 M1LA6**	484	**S201_5.8 P80 BN80A6**	485
159	21.8	2.7	8.6	3610	**S401_8.6 S1 M1SD4**	488	**S401_8.6 P71 BN71B4**	489
184	18.8	3.1	4.9	2040	**S301_4.9 S1 M1LA6**	486	**S301_4.9 P80 BN80A6**	487
190	18.3	1.4	7.2	1460	**S201_7.2 S1 M1SD4**	484	**S201_7.2 P71 BN71B4**	485
191	18.1	1.7	4.8	1460	**S201_4.8 S1 M1LA6**	484	**S201_4.8 P80 BN80A6**	485
193	17.9	2.8	7.1	2020	**S301_7.1 S1 M1SD4**	486	**S301_7.1 P71 BN71B4**	487
214	16.2	1.5	13.1	1960			**S301_13.1 P71 BN71A2**	487
224	15.4	1.0	6.1	710	**S101_6.1 S1 M1SD4**	482	**S101_6.1 P71 BN71B4**	483
227	15.3	2.6	12.4	3230			**S401_12.4 P71 BN71A2**	489

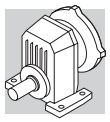

0.37 kW

n_2 min^{-1}	M_2 Nm	S	i	R_{n2} N	 IE1		IEC IE1	
231	15.0	2.0	3.9	1380	**S201_3.9 S1 M1LA6**	484	**S201_3.9 P80 BN80A6**	485
234	14.8	3.4	5.8	1900	**S301_5.8 S1 M1SD4**	486	**S301_5.8 P71 BN71B4**	487
235	14.7	1.8	5.8	1390	**S201_5.8 S1 M1SD4**	484	**S201_5.8 P71 BN71B4**	485
237	14.6	1.0	3.8	690	**S101_3.8 S1 M1LA6**	482	**S101_3.8 P80 BN80A6**	483
261	13.2	1.0	10.8	1350	**S201_10.8 S05 M05C2**	484	**S201_10.8 P71 BN71A2**	485
263	13.1	3.0	10.7	3080			**S401_10.7 P71 BN71A2**	489
273	12.7	1.9	10.3	1820			**S301_10.3 P71 BN71A2**	487
284	12.2	1.1	3.2	670	**S101_3.2 S1 M1LA6**	482	**S101_3.2 P80 BN80A6**	483
287	12.1	2.2	4.8	1310	**S201_4.8 S1 M1SD4**	484	**S201_4.8 P71 BN71B4**	485
290	11.9	1.0	4.7	670	**S101_4.7 S1 M1SD4**	482	**S101_4.7 P71 BN71B4**	483
293	11.8	2.5	3.1	1300	**S201_3.1 S1 M1LA6**	484	**S201_3.1 P80 BN80A6**	485
316	11.0	2.2	8.9	1740			**S301_8.9 P71 BN71A2**	487
331	10.5	1.2	8.5	1270	**S201_8.5 S05 M05C2**	484	**S201_8.5 P71 BN71A2**	485
348	9.9	2.6	3.9	1240	**S201_3.9 S1 M1SD4**	484	**S201_3.9 P71 BN71B4**	485
356	9.7	1.2	3.8	640	**S101_3.8 S1 M1SD4**	482	**S101_3.8 P71 BN71B4**	483
364	9.5	1.3	2.5	630	**S101_2.5 S1 M1LA6**	482	**S101_2.5 P80 BN80A6**	483
373	9.3	3.2	2.4	1210	**S201_2.4 S1 M1LA6**	484	**S201_2.4 P80 BN80A6**	485
389	8.9	2.4	7.2	1210	**S201_7.2 S05 M05C2**	484	**S201_7.2 P71 BN71A2**	485
407	8.5	1.4	6.9	630	**S101_6.9 S05 M05C2**	482	**S101_6.9 P71 BN71A2**	483
428	8.1	1.5	3.2	620	**S101_3.2 S1 M1SD4**	482	**S101_3.2 P71 BN71B4**	483
440	7.9	3.3	3.1	1160	**S201_3.1 S1 M1SD4**	484	**S201_3.1 P71 BN71B4**	485
460	7.5	1.6	6.1	610	**S101_6.1 S05 M05C2**	482	**S101_6.1 P71 BN71A2**	483
480	7.2	2.8	1.9	1130	**S201_1.9 S1 M1LA6**	484	**S201_1.9 P80 BN80A6**	485
483	7.2	2.9	5.8	1130	**S201_5.8 S05 M05C2**	484	**S201_5.8 P71 BN71A2**	485
485	7.1	1.7	1.9	590	**S101_1.9 S1 M1LA6**	482	**S101_1.9 P80 BN80A6**	483
548	6.3	1.6	2.5	580	**S101_2.5 S1 M1SD4**	482	**S101_2.5 P71 BN71B4**	483
594	5.8	1.7	4.7	570	**S101_4.7 S05 M05C2**	482	**S101_4.7 P71 BN71A2**	483
640	5.4	2.2	1.4	550	**S101_1.4 S1 M1LA6**	482	**S101_1.4 P80 BN80A6**	483
731	4.7	2.1	3.8	540	**S101_3.8 S05 M05C2**	482	**S101_3.8 P71 BN71A2**	483
731	4.7	2.1	1.9	540	**S101_1.9 S1 M1SD4**	482	**S101_1.9 P71 BN71B4**	483
878	3.9	2.5	3.2	520	**S101_3.2 S05 M05C2**	482	**S101_3.2 P71 BN71A2**	483
964	3.6	2.8	1.4	500	**S101_1.4 S1 M1SD4**	482	**S101_1.4 P71 BN71B4**	483
1124	3.1	2.6	2.5	480	**S101_2.5 S05 M05C2**	482	**S101_2.5 P71 BN71A2**	483
1499	2.3	3.5	1.9	440	**S101_1.9 S05 M05C2**	482	**S101_1.9 P71 BN71A2**	483
1977	1.8	4.6	1.4	410	**S101_1.4 S05 M05C2**	482	**S101_1.4 P71 BN71A2**	483

0.55 kW

n_2 min^{-1}	M_2 Nm	S	i	R_{n2} N	 IE1		IEC IE1	
71	72.1	1.4	12.9	6290	**S501_12.9 S2 M2SA6**	490	**S501_12.9 P80 BN80B6**	491
86	59.7	1.0	10.7	3800	**S401_10.7 S2 M2SA6**	488	**S401_10.7 P80 BN80B6**	489
88	58.5	2.0	10.5	5910	**S501_10.5 S2 M2SA6**	490	**S501_10.5 P80 BN80B6**	491
105	49.1	2.5	8.8	5600	**S501_8.8 S2 M2SA6**	490	**S501_8.8 P80 BN80B6**	491
107	48.3	1.4	8.6	3800	**S401_8.6 S2 M2SA6**	488	**S401_8.6 P80 BN80B6**	489
107	48.1	2.1	12.9	5560	**S501_12.9 S1 M1LA4**	490	**S501_12.9 P80 BN80A4**	491
111	46.3	1.1	12.4	3800	**S401_12.4 S1 M1LA4**	488	**S401_12.4 P80 BN80A4**	489
124	41.4	3.4	7.4	5310	**S501_7.4 S2 M2SA6**	490	**S501_7.4 P80 BN80B6**	491
129	40.0	2.2	7.2	3780	**S401_7.2 S2 M2SA6**	488	**S401_7.2 P80 BN80B6**	489
129	39.8	1.3	10.7	3770	**S401_10.7 S1 M1LA4**	488	**S401_10.7 P80 BN80A4**	489
130	39.7	1.5	7.1	2150	**S301_7.1 S2 M2SA6**	486	**S301_7.1 P80 BN80B6**	487
132	39.0	2.8	10.5	5220	**S501_10.5 S1 M1LA4**	490	**S501_10.5 P80 BN80A4**	491
152	33.9	3.1	6.1	3600	**S401_6.1 S2 M2SA6**	488	**S401_6.1 P80 BN80B6**	489
155	33.2	0.9	8.9	2060	**S301_8.9 S1 M1LA4**	486	**S301_8.9 P80 BN80A4**	487

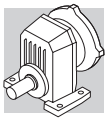

0.55 kW

n_2 min-1	M_2 Nm	S	i	R_{n2} N	IE1		IEC IE1	
157	32.7	1.8	5.8	2050	**S301_5.8 S2 M2SA6**	486	**S301_5.8 P80 BN80B6**	487
157	32.7	3.4	8.8	4940	**S501_8.8 S1 M1LA4**	490	**S501_8.8 P80 BN80A4**	491
158	32.6	0.9	5.8	1420	**S201_5.8 S2 M2SA6**	484	**S201_5.8 P80 BN80B6**	485
160	32.2	1.9	8.6	3540	**S401_8.6 S1 M1LA4**	488	**S401_8.6 P80 BN80A4**	489
186	27.6	2.1	4.9	1960	**S301_4.9 S2 M2SA6**	486	**S301_4.9 P80 BN80B6**	487
191	26.9	1.0	7.2	1370	**S201_7.2 S1 M1LA4**	484	**S201_7.2 P80 BN80A4**	485
193	26.7	1.1	4.8	1370	**S201_4.8 S2 M2SA6**	484	**S201_4.8 P80 BN80B6**	485
193	26.7	3.0	7.2	3350	**S401_7.2 S1 M1LA4**	488	**S401_7.2 P80 BN80A4**	489
195	26.4	1.9	7.1	1940	**S301_7.1 S1 M1LA4**	486	**S301_7.1 P80 BN80A4**	487
214	24.0	1.0	13.1	1900			**S301_13.1 P71 BN71B2**	487
218	23.6	3.4	12.9	4460	**S501_12.9 S1 M1SD2**	490	**S501_12.9 P71 BN71B2**	491
227	22.7	1.8	12.4	3190	**S401_12.4 S1 M1SD2**	488	**S401_12.4 P71 BN71B2**	489
233	22.1	2.6	3.9	1850	**S301_3.9 S2 M2SA6**	486	**S301_3.9 P80 BN80B6**	487
234	22.0	1.4	3.9	1300	**S201_3.9 S2 M2SA6**	484	**S201_3.9 P80 BN80B6**	485
236	21.8	2.3	5.8	1840	**S301_5.8 S1 M1LA4**	486	**S301_5.8 P80 BN80A4**	487
237	21.7	1.2	5.8	1310	**S201_5.8 S1 M1LA4**	484	**S201_5.8 P80 BN80A4**	485
263	19.5	2.0	10.7	3040	**S401_10.7 S1 M1SD2**	488	**S401_10.7 P71 BN71B2**	489
273	18.9	1.3	10.3	1780	**S301_10.3 S1 M1SD2**	486	**S301_10.3 P71 BN71B2**	487
280	18.4	2.7	4.9	1760	**S301_4.9 S1 M1LA4**	486	**S301_4.9 P80 BN80A4**	487
289	17.8	1.5	4.8	1250	**S201_4.8 S1 M1LA4**	484	**S201_4.8 P80 BN80A4**	485
296	17.4	1.7	3.1	1230	**S201_3.1 S2 M2SA6**	484	**S201_3.1 P80 BN80B6**	485
300	17.1	3.4	3.1	1720	**S301_3.1 S2 M2SA6**	486	**S301_3.1 P80 BN80B6**	487
316	16.3	1.5	8.9	1700	**S301_8.9 S1 M1SD2**	486	**S301_8.9 P71 BN71B2**	487
325	15.8	3.0	8.6	2850	**S401_8.6 S1 M1SD2**	488	**S401_8.6 P71 BN71B2**	489
350	14.7	3.4	3.9	1650	**S301_3.9 S1 M1LA4**	486	**S301_3.9 P80 BN80A4**	487
351	14.7	1.8	3.9	1190	**S201_3.9 S1 M1LA4**	484	**S201_3.9 P80 BN80A4**	485
377	13.6	2.2	2.4	1160	**S201_2.4 S2 M2SA6**	484	**S201_2.4 P80 BN80B6**	485
389	13.2	1.6	7.2	1160	**S201_7.2 S1 M1SD2**	484	**S201_7.2 P71 BN71B2**	485
396	13.0	3.1	7.1	1600	**S301_7.1 S1 M1SD2**	486	**S301_7.1 P71 BN71B2**	487
407	12.6	0.9	6.9	570	**S101_6.9 S1 M1SD2**	482	**S101_6.9 P71 BN71B2**	483
431	11.9	1.0	3.2	560	**S101_3.2 S1 M1LA4**	482	**S101_3.2 P80 BN80A4**	483
444	11.6	2.2	3.1	1120	**S201_3.1 S1 M1LA4**	484	**S201_3.1 P80 BN80A4**	485
460	11.2	1.1	6.1	570	**S101_6.1 S1 M1SD2**	482	**S101_6.1 P71 BN71B2**	483
483	10.7	2.0	5.8	1100	**S201_5.8 S1 M1SD2**	484	**S201_5.8 P71 BN71B2**	485
486	10.6	1.9	1.9	1080	**S201_1.9 S2 M2SA6**	484	**S201_1.9 P80 BN80B6**	485
491	10.5	1.1	1.9	540	**S101_1.9 S2 M2SA6**	482	**S101_1.9 P80 BN80B6**	483
504	10.2	3.4	1.8	1470	**S301_1.8 S2 M2SA6**	486	**S301_1.8 P80 BN80B6**	487
552	9.3	1.1	2.5	540	**S101_2.5 S1 M1LA4**	482	**S101_2.5 P80 BN80A4**	483
566	9.1	2.9	2.4	1050	**S201_2.4 S1 M1LA4**	484	**S201_2.4 P80 BN80A4**	485
589	8.7	2.4	4.8	1040	**S201_4.8 S1 M1SD2**	484	**S201_4.8 P71 BN71B2**	485
594	8.7	1.2	4.7	540	**S101_4.7 S1 M1SD2**	482	**S101_4.7 P71 BN71B2**	483
647	8.0	1.5	1.4	510	**S101_1.4 S2 M2SA6**	482	**S101_1.4 P80 BN80B6**	483
661	7.8	2.6	1.4	990	**S201_1.4 S2 M2SA6**	484	**S201_1.4 P80 BN80B6**	485
714	7.2	2.9	3.9	980	**S201_3.9 S1 M1SD2**	484	**S201_3.9 P71 BN71B2**	485
728	7.1	2.4	1.9	970	**S201_1.9 S1 M1LA4**	484	**S201_1.9 P80 BN80A4**	485
731	7.0	1.4	3.8	510	**S101_3.8 S1 M1SD2**	482	**S101_3.8 P71 BN71B2**	483
736	7.0	1.4	1.9	500	**S101_1.9 S1 M1LA4**	482	**S101_1.9 P80 BN80A4**	483
878	5.9	1.7	3.2	490	**S101_3.2 S1 M1SD2**	482	**S101_3.2 P71 BN71B2**	483
971	5.3	1.9	1.4	470	**S101_1.4 S1 M1LA4**	482	**S101_1.4 P80 BN80A4**	483
992	5.2	3.3	1.4	890			**S201_1.4 P80 BN80A4**	485
1124	4.6	1.7	2.5	460	**S101_2.5 S1 M1SD2**	482	**S101_2.5 P71 BN71B2**	483
1499	3.4	2.3	1.9	430	**S101_1.9 S1 M1SD2**	482	**S101_1.9 P71 BN71B2**	483
1977	2.6	3.1	1.4	390	**S101_1.4 S1 M1SD2**	482	**S101_1.4 P71 BN71B2**	483

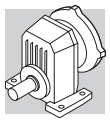

0.75 kW

n_2 min-1	M_2 Nm	S	i	R_{n2} N	IE2	IE3		IEC IE2	IEC IE3	
73	96	1.0	12.9	6170	**S501_12.9 S3 ME3SA6**		490	**S501_12.9 P90 BE90S6**		491
90	78	1.5	10.5	5810	**S501_10.5 S3 ME3SA6**		490	**S501_10.5 P90 BE90S6**		491
107	65	1.9	8.8	5520	**S501_8.8 S3 ME3SA6**		490	**S501_8.8 P90 BE90S6**		491
111	63	1.6	12.9	5460	**S501_12.9 S2 ME2SB4**	**S501_12.9 S2 MX2SB4**	490	**S501_12.9 P80 BE80B4**	**S501_12.9 P80 BX80B4**	491
127	55	2.5	7.4	5240	**S501_7.4 S3 ME3SA6**		490	**S501_7.4 P90 BE90S6**		491
131	53	1.7	7.2	3700	**S401_7.2 S3 ME3SA6**		488	**S401_7.2 P90 BE90S6**		489
134	52	1.0	10.7	3670	**S401_10.7 S2 ME2SB4**	**S401_10.7 S2 MX2SB4**	488	**S401_10.7 P80 BE80B4**	**S401_10.7 P80 BX80B4**	489
137	51	2.1	10.5	5130	**S501_10.5 S2 ME2SB4**	**S501_10.5 S2 MX2SB4**	490	**S501_10.5 P80 BE80B4**	**S501_10.5 P80 BX80B4**	491
155	45	2.3	6.1	3530	**S401_6.1 S3 ME3SA6**		488	**S401_6.1 P90 BE90S6**		489
161	44	1.3	5.8	1960	**S301_5.8 S3 ME3SA6**		486	**S301_5.8 P90 BE90S6**		487
163	43	2.6	8.8	4870	**S501_8.8 S2 ME2SB4**	**S501_8.8 S2 MX2SB4**	490	**S501_8.8 P80 BE80B4**	**S501_8.8 P80 BX80B4**	491
166	42	1.4	8.6	3460	**S401_8.6 S2 ME2SB4**	**S401_8.6 S2 MX2SB4**	488	**S401_8.6 P80 BE80B4**	**S401_8.6 P80 BX80B4**	489
191	37	1.6	4.9	1880	**S301_4.9 S3 ME3SA6**		486	**S301_4.9 P90 BE90S6**		487
194	36	2.9	4.8	3300	**S401_4.8 S3 ME3SA6**		488	**S401_4.8 P90 BE90S6**		489
200	35	2.3	7.2	3280	**S401_7.2 S2 ME2SB4**	**S401_7.2 S2 MX2SB4**	488	**S401_7.2 P80 BE80B4**	**S401_7.2 P80 BX80B4**	489
202	35	1.4	7.1	1860	**S301_7.1 S2 ME2SB4**	**S301_7.1 S2 MX2SB4**	486	**S301_7.1 P80 BE80B4**	**S301_7.1 P80 BX80B4**	487
221	32	2.5	12.9	4420	**S501_12.9 S2 ME2SA2**		490	**S501_12.9 P80 BE80A2**		491
230	31	1.3	12.4	3150	**S401_12.4 S2 ME2SA2**		488	**S401_12.4 P80 BE80A2**		489
236	30	3.0	6.1	3120	**S401_6.1 S2 ME2SB4**	**S401_6.1 S2 MX2SB4**	488	**S401_6.1 P80 BE80B4**	**S401_6.1 P80 BX80B4**	489
238	29	2.0	3.9	1780	**S301_3.9 S3 ME3SA6**		486	**S301_3.9 P90 BE90S6**		487
245	29	1.7	5.8	1780	**S301_5.8 S2 ME2SB4**	**S301_5.8 S2 MX2SB4**	486	**S301_5.8 P80 BE80B4**	**S301_5.8 P80 BX80B4**	487
246	29	0.9	5.8	1160	**S201_5.8 S2 ME2SB4**	**S201_5.8 S2 MX2SB4**	484	**S201_5.8 P80 BE80B4**	**S201_5.8 P80 BX80B4**	485
267	26	1.5	10.7	3000	**S401_10.7 S2 ME2SA2**		488	**S401_10.7 P80 BE80A2**		489
273	26	3.3	10.5	4140	**S501_10.5 S2 ME2SA2**		490	**S501_10.5 P80 BE80A2**		491
277	25	0.9	10.3	1730	**S301_10.3 S2 ME2SA2**		486	**S301_10.3 P80 BE80A2**		487
290	24	2.1	4.9	1700	**S301_4.9 S2 ME2SB4**	**S301_4.9 S2 MX2SB4**	486	**S301_4.9 P80 BE80B4**	**S301_4.9 P80 BX80B4**	487
300	23	1.1	4.8	1180	**S201_4.8 S2 ME2SB4**	**S201_4.8 S2 MX2SB4**	484	**S201_4.8 P80 BE80B4**	**S201_4.8 P80 BX80B4**	485
302	23	1.3	3.1	1160	**S201_3.1 S3 ME3SA6**		484	**S201_3.1 P90 BE90S6**		485
307	23	2.5	3.1	1670	**S301_3.1 S3 ME3SA6**		486	**S301_3.1 P90 BE90S6**		487
321	22	1.1	8.9	1660	**S301_8.9 S2 ME2SA2**		486	**S301_8.9 P80 BE80A2**		487
330	21	2.3	8.6	2820	**S401_8.6 S2 ME2SA2**		488	**S401_8.6 P80 BE80A2**		489
363	19.3	2.6	3.9	1600	**S301_3.9 S2 ME2SB4**	**S301_3.9 S2 MX2SB4**	486	**S301_3.9 P80 BE80B4**	**S301_3.9 P80 BX80B4**	487
364	19.3	1.3	3.9	1130	**S201_3.9 S2 ME2SB4**	**S201_3.9 S2 MX2SB4**	484	**S201_3.9 P80 BE80B4**	**S201_3.9 P80 BX80B4**	485
386	18.2	1.6	2.4	1110	**S201_2.4 S3 ME3SA6**		484	**S201_2.4 P90 BE90S6**		485
388	18.1	3.2	2.4	1560	**S301_2.4 S3 ME3SA6**		486	**S301_2.4 P90 BE90S6**		487
395	17.8	1.2	7.2	1120	**S201_7.2 S2 ME2SA2**		484	**S201_7.2 P80 BE80A2**		485
402	17.5	2.3	7.1	1560	**S301_7.1 S2 ME2SA2**		486	**S301_7.1 P80 BE80A2**		487
460	15.2	1.7	3.1	1070	**S201_3.1 S2 ME2SB4**	**S201_3.1 S2 MX2SB4**	484	**S201_3.1 P80 BE80B4**	**S201_3.1 P80 BX80B4**	485
467	15.0	3.3	3.1	1490	**S301_3.1 S2 ME2SB4**	**S301_3.1 S2 MX2SB4**	486	**S301_3.1 P80 BE80B4**	**S301_3.1 P80 BX80B4**	487
488	14.4	2.8	5.8	1480	**S301_5.8 S2 ME2SA2**		486	**S301_5.8 P80 BE80A2**		487
490	14.3	1.5	5.8	1060	**S201_5.8 S2 ME2SA2**		484	**S201_5.8 P80 BE80A2**		485
496	14.1	1.4	1.9	1040	**S201_1.9 S3 ME3SA6**		484	**S201_1.9 P90 BE90S6**		485
515	13.6	2.6	1.8	1440	**S301_1.8 S3 ME3SA6**		486	**S301_1.8 P90 BE90S6**		487
578	12.1	3.3	4.9	1410	**S301_4.9 S2 ME2SA2**		486	**S301_4.9 P80 BE80A2**		487
587	11.9	2.2	2.4	1010	**S201_2.4 S2 ME2SB4**	**S201_2.4 S2 MX2SB4**	484	**S201_2.4 P80 BE80B4**	**S201_2.4 P80 BX80B4**	485
591	11.9	4.2	2.4	1380	**S301_2.4 S2 ME2SB4**	**S301_2.4 S2 MX2SB4**	486	**S301_2.4 P80 BE80B4**	**S301_2.4 P80 BX80B4**	487
598	11.7	1.8	4.8	1010	**S201_4.8 S2 ME2SA2**		484	**S201_4.8 P80 BE80A2**		485
661	10.6	1.1	1.4	460	**S101_1.4 S3 ME3SA6**		482	**S101_1.4 P90 BE90S6**		483
668	10.5	3.3	1.4	1330	**S301_1.4 S3 ME3SA6**		486	**S301_1.4 P90 BE90S6**		487
676	10.4	1.9	1.4	960	**S201_1.4 S3 ME3SA6**		484	**S201_1.4 P90 BE90S6**		485
725	9.7	2.2	3.9	960	**S201_3.9 S2 ME2SA2**		484	**S201_3.9 P80 BE80A2**		485
741	9.5	1.1	3.8	480	**S101_3.8 S2 ME2SA2**		482	**S101_3.8 P80 BE80A2**		483
755	9.3	1.8	1.9	940	**S201_1.9 S2 ME2SB4**	**S201_1.9 S2 MX2SB4**	484	**S201_1.9 P80 BE80B4**	**S201_1.9 P80 BX80B4**	485
763	9.2	1.1	1.9	460	**S101_1.9 S2 ME2SB4**	**S101_1.9 S2 MX2SB4**	482	**S101_1.9 P80 BE80B4**	**S101_1.9 P80 BX80B4**	483
783	8.9	3.4	1.8	1280	**S301_1.8 S2 ME2SB4**	**S301_1.8 S2 MX2SB4**	486	**S301_1.8 P80 BE80B4**	**S301_1.8 P80 BX80B4**	487
891	7.9	1.3	3.2	460	**S101_3.2 S2 ME2SA2**		482	**S101_3.2 P80 BE80A2**		483
916	7.7	2.7	3.1	900	**S201_3.1 S2 ME2SA2**		484	**S201_3.1 P80 BE80A2**		485

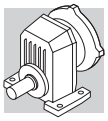

0.75 kW

n_2 min-1	M_2 Nm	S	i	R_{n2} N	IE2	IE3		IEC IE2	IEC IE3	
1006	7.0	1.4	1.4	440	**S101_1.4 S2 ME2SB4**	**S101_1.4 S2 MX2SB4**	482	**S101_1.4 P80 BE80B4**	**S101_1.4 P80 BX80B4**	483
1028	6.8	2.5	1.4	860	**S201_1.4 S2 ME2SB4**	**S201_1.4 S2 MX2SB4**	484	**S201_1.4 P80 BE80B4**	**S201_1.4 P80 BX80B4**	485
1140	6.2	1.3	2.5	440	**S101_2.5 S2 ME2SA2**		482	**S101_2.5 P80 BE80A2**		483
1169	6.0	3.5	2.4	840	**S201_2.4 S2 ME2SA2**		484	**S201_2.4 P80 BE80A2**		485
1504	4.7	2.8	1.9	780	**S201_1.9 S2 ME2SA2**		484	**S201_1.9 P80 BE80A2**		485
1520	4.6	1.7	1.9	410	**S101_1.9 S2 ME2SA2**		482	**S101_1.9 P80 BE80A2**		483
2006	3.5	2.3	1.4	380	**S101_1.4 S2 ME2SA2**		482	**S101_1.4 P80 BE80A2**		483

1.1 kW

n_2 min-1	M_2 Nm	S	i	R_{n2} N	IE2	IE3		IEC IE2	IEC IE3	
90	114	1.0	10.5	5650	**S501_10.5 S3 ME3LA6**		490	**S501_10.5 P100 BE100M6**		491
108	96	1.3	8.8	5380	**S501_8.8 S3 ME3LA6**		490	**S501_8.8 P100 BE100M6**		491
111	93	1.1	12.9	5320	**S501_12.9 S3 ME3SA4**	**S501_12.9 S3 MX3SA4**	490	**S501_12.9 P90 BE90S4**	**S501_12.9 P90 BX90S4**	491
128	81	1.7	7.4	5120	**S501_7.4 S3 ME3LA6**		490	**S501_7.4 P100 BE100M6**		491
132	78	1.2	7.2	3550	**S401_7.2 S3 ME3LA6**		488	**S401_7.2 P100 BE100M6**		489
137	76	1.5	10.5	5020	**S501_10.5 S3 ME3SA4**	**S501_10.5 S3 MX3SA4**	490	**S501_10.5 P90 BE90S4**	**S501_10.5 P90 BX90S4**	491
156	66	1.6	6.1	3400	**S401_6.1 S3 ME3LA6**		488	**S401_6.1 P100 BE100M6**		489
156	66	2.3	6.1	4840	**S501_6.1 S3 ME3LA6**		490	**S501_6.1 P100 BE100M6**		491
163	64	1.7	8.8	4770	**S501_8.8 S3 ME3SA4**	**S501_8.8 S3 MX3SA4**	490	**S501_8.8 P90 BE90S4**	**S501_8.8 P90 BX90S4**	491
166	63	1.0	8.6	3350	**S401_8.6 S3 ME3SA4**	**S401_8.6 S3 MX3SA4**	488	**S401_8.6 P90 BE90S4**	**S401_8.6 P90 BX90S4**	489
192	54	1.1	4.9	1740	**S301_4.9 S3 ME3LA6**		486	**S301_4.9 P100 BE100M6**		487
193	54	2.4	7.4	4530	**S501_7.4 S3 ME3SA4**	**S501_7.4 S3 MX3SA4**	490	**S501_7.4 P90 BE90S4**	**S501_7.4 P90 BX90S4**	491
196	53	2.0	4.8	3200	**S401_4.8 S3 ME3LA6**		488	**S401_4.8 P100 BE100M6**		489
200	52	1.5	7.2	3180	**S401_7.2 S3 ME3SA4**	**S401_7.2 S3 MX3SA4**	488	**S401_7.2 P90 BE90S4**	**S401_7.2 P90 BX90S4**	489
202	51	1.0	7.1	1730	**S301_7.1 S3 ME3SA4**	**S301_7.1 S3 MX3SA4**	486	**S301_7.1 P90 BE90S4**	**S301_7.1 P90 BX90S4**	487
220	47	1.7	12.9	4350	**S501_12.9 S2 ME2SB2**		490	**S501_12.9 P80 BE80B2**		491
236	44	2.0	6.1	3040	**S401_6.1 S3 ME3SA4**	**S401_6.1 S3 MX3SA4**	488	**S401_6.1 P90 BE90S4**	**S401_6.1 P90 BX90S4**	489
236	44	3.0	6.1	4270	**S501_6.1 S3 ME3SA4**	**S501_6.1 S3 MX3SA4**	490	**S501_6.1 P90 BE90S4**	**S501_6.1 P90 BX90S4**	491
240	43	1.3	3.9	1670	**S301_3.9 S3 ME3LA6**		486	**S301_3.9 P100 BE100M6**		487
245	42	1.2	5.8	1670	**S301_5.8 S3 ME3SA4**	**S301_5.8 S3 MX3SA4**	486	**S301_5.8 P90 BE90S4**	**S301_5.8 P90 BX90S4**	487
248	42	2.5	3.8	2990	**S401_3.8 S3 ME3LA6**		488	**S401_3.8 P100 BE100M6**		489
265	39	1.0	10.7	2930	**S401_10.7 S2 ME2SB2**		488	**S401_10.7 P80 BE80B2**		489
271	38	2.2	10.5	4090	**S501_10.5 S2 ME2SB2**		490	**S501_10.5 P80 BE80B2**		491
290	36	1.4	4.9	1610	**S301_4.9 S3 ME3SA4**	**S301_4.9 S3 MX3SA4**	486	**S301_4.9 P90 BE90S4**	**S301_4.9 P90 BX90S4**	487
296	35	2.6	4.8	2850	**S401_4.8 S3 ME3SA4**	**S401_4.8 S3 MX3SA4**	488	**S401_4.8 P90 BE90S4**	**S401_4.8 P90 BX90S4**	489
309	33	1.7	3.1	1580	**S301_3.1 S3 ME3LA6**		486	**S301_3.1 P100 BE100M6**		487
310	33	3.2	3.1	2810	**S401_3.1 S3 ME3LA6**		488	**S401_3.1 P100 BE100M6**		489
323	32	2.7	8.8	3870	**S501_8.8 S2 ME2SB2**		490	**S501_8.8 P80 BE80B2**		491
328	31	1.5	8.6	2760	**S401_8.6 S2 ME2SB2**		488	**S401_8.6 P80 BE80B2**		489
363	29	1.7	3.9	1530	**S301_3.9 S3 ME3SA4**	**S301_3.9 S3 MX3SA4**	486	**S301_3.9 P90 BE90S4**	**S301_3.9 P90 BX90S4**	487
364	29	0.9	3.9	950	**S201_3.9 S3 ME3SA4**	**S201_3.9 S3 MX3SA4**	484	**S201_3.9 P90 BE90S4**	**S201_3.9 P90 BX90S4**	485
375	28	3.3	3.8	2650	**S401_3.8 S3 ME3SA4**	**S401_3.8 S3 MX3SA4**	488	**S401_3.8 P90 BE90S4**	**S401_3.8 P90 BX90S4**	489
390	26	2.2	2.4	1490	**S301_2.4 S3 ME3LA6**		486	**S301_2.4 P100 BE100M6**		487
396	26	2.4	7.2	2610	**S401_7.2 S2 ME2SB2**		488	**S401_7.2 P80 BE80B2**		489
399	26	1.6	7.1	1500	**S301_7.1 S2 ME2SB2**		486	**S301_7.1 P80 BE80B2**		487
460	23	1.2	3.1	990	**S201_3.1 S3 ME3SA4**	**S201_3.1 S3 MX3SA4**	484	**S201_3.1 P90 BE90S4**	**S201_3.1 P90 BX90S4**	485
467	22	2.3	3.1	1430	**S301_3.1 S3 ME3SA4**	**S301_3.1 S3 MX3SA4**	486	**S301_3.1 P90 BE90S4**	**S301_3.1 P90 BX90S4**	487
484	21	1.9	5.8	1420	**S301_5.8 S2 ME2SB2**		486	**S301_5.8 P80 BE80B2**		487
499	21	1.0	1.9	960	**S201_1.9 S3 ME3LA6**		484	**S201_1.9 P100 BE100M6**		485
510	20	3.5	1.9	2420	**S401_1.9 S3 ME3LA6**		488	**S401_1.9 P100 BE100M6**		489
518	19.9	1.8	1.8	1380	**S301_1.8 S3 ME3LA6**		486	**S301_1.8 P100 BE100M6**		487
574	17.9	2.2	4.9	1360	**S301_4.9 S2 ME2SB2**		486	**S301_4.9 P80 BE80B2**		487
587	17.7	1.5	2.4	940	**S201_2.4 S3 ME3SA4**	**S201_2.4 S3 MX3SA4**	484	**S201_2.4 P90 BE90S4**	**S201_2.4 P90 BX90S4**	485

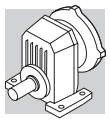

1.1 kW

n_2 min-1	M_2 Nm	S	i	R_{n2} N	IE2	IE3		IEC IE2	IEC IE3	
591	17.6	2.8	2.4	1340	**S301_2.4 S3 ME3SA4**	**S301_2.4 S3 MX3SA4**	486	**S301_2.4 P90 BE90S4**	**S301_2.4 P90 BX90S4**	487
593	17.3	1.2	4.8	950	**S201_4.8 S2 ME2SB2**		484	**S201_4.8 P80 BE80B2**		485
671	15.3	2.3	1.4	1290	**S301_1.4 S3 ME3LA6**		486	**S301_1.4 P100 BE100M6**		487
679	15.2	1.3	1.4	900	**S201_1.4 S3 ME3LA6**		484	**S201_1.4 P100 BE100M6**		485
717	14.3	2.8	3.9	1280	**S301_3.9 S2 ME2SB2**		486	**S301_3.9 P80 BE80B2**		487
719	14.3	1.5	3.9	910	**S201_3.9 S2 ME2SB2**		484	**S201_3.9 P80 BE80B2**		485
755	13.7	1.2	1.9	890	**S201_1.9 S3 ME3SA4**	**S201_1.9 S3 MX3SA4**	484	**S201_1.9 P90 BE90S4**	**S201_1.9 P90 BX90S4**	485
783	13.2	2.3	1.8	1240	**S301_1.8 S3 ME3SA4**	**S301_1.8 S3 MX3SA4**	486	**S301_1.8 P90 BE90S4**	**S301_1.8 P90 BX90S4**	487
910	11.3	1.9	3.1	860	**S201_3.1 S2 ME2SB2**		484	**S201_3.1 P80 BE80B2**		485
1006	10.3	1.0	1.4	390	**S101_1.4 S3 ME3SA4**	**S101_1.4 S3 MX3SA4**	482	**S101_1.4 P90 BE90S4**	**S101_1.4 P90 BX90S4**	483
1016	10.2	2.9	1.4	1150	**S301_1.4 S3 ME3SA4**	**S301_1.4 S3 MX3SA4**	486	**S301_1.4 P90 BE90S4**	**S301_1.4 P90 BX90S4**	487
1028	10.1	1.7	1.4	820	**S201_1.4 S3 ME3SA4**	**S201_1.4 S3 MX3SA4**	484	**S201_1.4 P90 BE90S4**	**S201_1.4 P90 BX90S4**	485
1161	8.9	2.4	2.4	810	**S201_2.4 S2 ME2SB2**		484	**S201_2.4 P80 BE80B2**		485
1494	6.9	1.9	1.9	750	**S201_1.9 S2 ME2SB2**		484	**S201_1.9 P80 BE80B2**		485
1509	6.8	1.2	1.9	380	**S101_1.9 S2 ME2SB2**		482	**S101_1.9 P80 BE80B2**		483
1991	5.2	1.5	1.4	350	**S101_1.4 S2 ME2SB2**		482	**S101_1.4 P80 BE80B2**		483
2034	5.1	2.6	1.4	690	**S201_1.4 S2 ME2SB2**		484	**S201_1.4 P80 BE80B2**		485

1.5 kW

n_2 min-1	M_2 Nm	S	i	R_{n2} N	IE2	IE3		IEC IE2	IEC IE3	
108	130	1.0	8.8	5190	**S501_8.8 S3 ME3LB6**		490	**S501_8.8 P100 BE100LA6**		491
128	110	1.3	7.4	4960	**S501_7.4 S3 ME3LB6**		490	**S501_7.4 P100 BE100LA6**		491
137	102	1.1	10.5	4880	**S501_10.5 S3 ME3SB4**	**S501_10.5 S3 MX3SB4**	490	**S501_10.5 P90 BE90LA4**	**S501_10.5 P90 BX90LA4**	491
156	90	1.7	6.1	4700	**S501_6.1 S3 ME3LB6**		490	**S501_6.1 P100 BE100LA6**		491
163	86	1.3	8.8	4660	**S501_8.8 S3 ME3SB4**	**S501_8.8 S3 MX3SB4**	490	**S501_8.8 P90 BE90LA4**	**S501_8.8 P90 BX90LA4**	491
193	73	1.8	7.4	4440	**S501_7.4 S3 ME3SB4**	**S501_7.4 S3 MX3SB4**	490	**S501_7.4 P90 BE90LA4**	**S501_7.4 P90 BX90LA4**	491
196	72	1.5	4.8	3070	**S401_4.8 S3 ME3LB6**		488	**S401_4.8 P100 BE100LA6**		489
199	71	2.5	4.8	4380	**S501_4.8 S3 ME3LB6**		490	**S501_4.8 P100 BE100LA6**		491
200	70	1.1	7.2	3070	**S401_7.2 S3 ME3SB4**	**S401_7.2 S3 MX3SB4**	488	**S401_7.2 P90 BE90LA4**	**S401_7.2 P90 BX90LA4**	489
222	63	1.3	12.9	4270	**S501_12.9 S3 ME3SA2**		490	**S501_12.9 P90 BE90SA2**		491
236	59	1.5	6.1	2940	**S401_6.1 S3 ME3SB4**	**S401_6.1 S3 MX3SB4**	488	**S401_6.1 P90 BE90LA4**	**S401_6.1 P90 BX90LA4**	489
236	59	2.2	6.1	4190	**S501_6.1 S3 ME3SB4**	**S501_6.1 S3 MX3SB4**	490	**S501_6.1 P90 BE90LA4**	**S501_6.1 P90 BX90LA4**	491
248	57	1.9	3.8	2880	**S401_3.8 S3 ME3LB6**		488	**S401_3.8 P100 BE100LA6**		489
273	51	1.7	10.5	4020	**S501_10.5 S3 ME3SA2**		490	**S501_10.5 P90 BE90SA2**		491
290	48	1.0	4.9	1500	**S301_4.9 S3 ME3SB4**	**S301_4.9 S3 MX3SB4**	486	**S301_4.9 P90 BE90LA4**	**S301_4.9 P90 BX90LA4**	487
296	47	1.9	4.8	2770	**S401_4.8 S3 ME3SB4**	**S401_4.8 S3 MX3SB4**	488	**S401_4.8 P90 BE90LA4**	**S401_4.8 P90 BX90LA4**	489
301	47	3.2	4.8	3890	**S501_4.8 S3 ME3SB4**	**S501_4.8 S3 MX3SB4**	490	**S501_4.8 P90 BE90LA4**	**S501_4.8 P90 BX90LA4**	491
309	45	1.3	3.1	1470	**S301_3.1 S3 ME3LB6**		486	**S301_3.1 P100 BE100LA6**		487
310	45	2.3	3.1	2720	**S401_3.1 S3 ME3LB6**		488	**S401_3.1 P100 BE100LA6**		489
326	43	2.0	8.8	3820	**S501_8.8 S3 ME3SA2**		490	**S501_8.8 P90 BE90SA2**		491
331	42	1.1	8.6	2700	**S401_8.6 S3 ME3SA2**		488	**S401_8.6 P90 BE90SA2**		489
363	39	1.3	3.9	1440	**S301_3.9 S3 ME3SB4**	**S301_3.9 S3 MX3SB4**	486	**S301_3.9 P90 BE90LA4**	**S301_3.9 P90 BX90LA4**	487
375	37	2.4	3.8	2590	**S401_3.8 S3 ME3SB4**	**S401_3.8 S3 MX3SB4**	488	**S401_3.8 P90 BE90LA4**	**S401_3.8 P90 BX90LA4**	489
386	36	2.7	7.4	3630	**S501_7.4 S3 ME3SA2**		490	**S501_7.4 P90 BE90SA2**		491
390	36	1.6	2.4	1400	**S301_2.4 S3 ME3LB6**		486	**S301_2.4 P100 BE100LA6**		487
395	36	3.0	2.4	2540	**S401_2.4 S3 ME3LB6**		488	**S401_2.4 P100 BE100LA6**		489
399	35	1.8	7.2	2560	**S401_7.2 S3 ME3SA2**		488	**S401_7.2 P90 BE90SA2**		489
403	35	1.1	7.1	1420	**S301_7.1 S3 ME3SA2**		486	**S301_7.1 P90 BE90SA2**		487
467	30	1.7	3.1	1360	**S301_3.1 S3 ME3SB4**	**S301_3.1 S3 MX3SB4**	486	**S301_3.1 P90 BE90LA4**	**S301_3.1 P90 BX90LA4**	487
468	30	3.0	3.1	2430	**S401_3.1 S3 ME3SB4**	**S401_3.1 S3 MX3SB4**	488	**S401_3.1 P90 BE90LA4**	**S401_3.1 P90 BX90LA4**	489
471	30	2.3	6.1	2440	**S401_6.1 S3 ME3SA2**		488	**S401_6.1 P90 BE90SA2**		489
488	29	1.4	5.8	1360	**S301_5.8 S3 ME3SA2**		486	**S301_5.8 P90 BE90SA2**		487

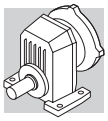

1.5 kW

n_2 min-1	M_2 Nm	S	i	R_{n2} N	IE2	IE3		IEC IE2	IEC IE3	
510	28	2.5	1.9	2350	**S401_1.9 S3 ME3LB6**		488	**S401_1.9 P100 BE100LA6**		489
518	27	1.3	1.8	1310	**S301_1.8 S3 ME3LB6**		486	**S301_1.8 P100 BE100LA6**		487
579	24	1.6	4.9	1310	**S301_4.9 S3 ME3SA2**		486	**S301_4.9 P90 BE90SA2**		487
587	24	1.1	2.4	870	**S201_2.4 S3 ME3SB4**	**S201_2.4 S3 MX3SB4**	484	**S201_2.4 P90 BE90LA4**	**S201_2.4 P90 BX90LA4**	485
591	24	2.1	2.4	1290	**S301_2.4 S3 ME3SB4**	**S301_2.4 S3 MX3SB4**	486	**S301_2.4 P90 BE90LA4**	**S301_2.4 P90 BX90LA4**	487
598	23	3.8	2.4	2200	**S401_2.4 S3 ME3SB4**	**S401_2.4 S3 MX3SB4**	488	**S401_2.4 P90 BE90LA4**	**S401_2.4 P90 BX90LA4**	489
671	21	1.7	1.4	1230	**S301_1.4 S3 ME3LB6**		486	**S301_1.4 P100 BE100LA6**		487
679	21	1.0	1.4	830	**S201_1.4 S3 ME3LB6**		484	**S201_1.4 P100 BE100LA6**		485
693	20	3.5	1.4	2150	**S401_1.4 S3 ME3LB6**		488	**S401_1.4 P100 BE100LA6**		489
724	19.4	2.1	3.9	1240	**S301_3.9 S3 ME3SA2**		486	**S301_3.9 P90 BE90SA2**		487
755	18.6	0.9	1.9	830	**S201_1.9 S3 ME3SB4**	**S201_1.9 S3 MX3SB4**	484	**S201_1.9 P90 BE90LA4**	**S201_1.9 P90 BX90LA4**	485
772	18.1	3.3	1.9	2090	**S401_1.9 S3 ME3SB4**	**S401_1.9 S3 MX3SB4**	488	**S401_1.9 P90 BE90LA4**	**S401_1.9 P90 BX90LA4**	489
783	17.9	1.7	1.8	1200	**S301_1.8 S3 ME3SB4**	**S301_1.8 S3 MX3SB4**	486	**S301_1.8 P90 BE90LA4**	**S301_1.8 P90 BX90LA4**	487
918	15.3	1.4	3.1	810	**S201_3.1 S3 ME3SA2**		484	**S201_3.1 P90 BE90SA2**		485
932	15.1	2.7	3.1	1160	**S301_3.1 S3 ME3SA2**		486	**S301_3.1 P90 BE90SA2**		487
1016	13.8	2.2	1.4	1110	**S301_1.4 S3 ME3SB4**	**S301_1.4 S3 MX3SB4**	486	**S301_1.4 P90 BE90LA4**	**S301_1.4 P90 BX90LA4**	487
1028	13.6	1.2	1.4	780	**S201_1.4 S3 ME3SB4**	**S201_1.4 S3 MX3SB4**	484	**S201_1.4 P90 BE90LA4**	**S201_1.4 P90 BX90LA4**	485
1171	12.0	1.8	2.4	770	**S201_2.4 S3 ME3SA2**		484	**S201_2.4 P90 BE90SA2**		485
1507	9.3	1.4	1.9	720	**S201_1.9 S3 ME3SA2**		484	**S201_1.9 P90 BE90SA2**		485
1563	9.0	2.7	1.8	1000	**S301_1.8 S3 ME3SA2**		486	**S301_1.8 P90 BE90SA2**		487
2009	7.0	1.1	1.4	320	**S101_1.4 S3 ME3SA2**		482	**S101_1.4 P90 BE90SA2**		483
2029	6.9	3.5	1.4	920	**S301_1.4 S3 ME3SA2**		486	**S301_1.4 P90 BE90SA2**		487
2052	6.8	1.9	1.4	670	**S201_1.4 S3 ME3SA2**		484	**S201_1.4 P90 BE90SA2**		485

2.2 kW

n_2 min-1	M_2 Nm	S	i	R_{n2} N	IE2	IE3		IEC IE2	IEC IE3	
158	131	1.1	6.1	4520	**S501_6.1 S4 ME4SA6**		490	**S501_6.1 P112 BE112M6**		491
193	107	1.2	7.4	4280	**S501_7.4 S3 ME3LA4**	**S501_7.4 S3 MX3LA4**	490	**S501_7.4 P100 BE100LA4**	**S501_7.4 P100 BX100LA4**	491
201	102	1.7	4.8	4230	**S501_4.8 S4 ME4SA6**		490	**S501_4.8 P112 BE112M6**		491
236	87	1.0	6.1	2790	**S401_6.1 S3 ME3LA4**	**S401_6.1 S3 MX3LA4**	488	**S401_6.1 P100 BE100LA4**	**S401_6.1 P100 BX100LA4**	489
236	87	1.5	6.1	4060	**S501_6.1 S3 ME3LA4**	**S501_6.1 S3 MX3LA4**	490	**S501_6.1 P100 BE100LA4**	**S501_6.1 P100 BX100LA4**	491
249	83	2.1	3.8	4000	**S501_3.8 S4 ME4SA6**		490	**S501_3.8 P112 BE112M6**		491
250	82	1.3	3.8	2730	**S401_3.8 S4 ME4SA6**		488	**S401_3.8 P112 BE112M6**		489
274	75	1.1	10.5	3910	**S501_10.5 S3 ME3LA2**		490	**S501_10.5 P90 BE90L2**		491
296	70	1.3	4.8	2640	**S401_4.8 S3 ME3LA4**	**S401_4.8 S3 MX3LA4**	488	**S401_4.8 P100 BE100LA4**	**S401_4.8 P100 BX100LA4**	489
301	68	2.2	4.8	3790	**S501_4.8 S3 ME3LA4**	**S501_4.8 S3 MX3LA4**	490	**S501_4.8 P100 BE100LA4**	**S501_4.8 P100 BX100LA4**	491
313	66	1.6	3.1	2590	**S401_3.1 S4 ME4SA6**		488	**S401_3.1 P112 BE112M6**		489
314	66	2.4	3.0	3750	**S501_3.0 S4 ME4SA6**		490	**S501_3.0 P112 BE112M6**		491
327	63	1.3	8.8	3730	**S501_8.8 S3 ME3LA2**		490	**S501_8.8 P90 BE90L2**		491
372	55	2.7	3.8	3570	**S501_3.8 S3 ME3LA4**	**S501_3.8 S3 MX3LA4**	490	**S501_3.8 P100 BE100LA4**	**S501_3.8 P100 BX100LA4**	491
375	55	1.6	3.8	2490	**S401_3.8 S3 ME3LA4**	**S401_3.8 S3 MX3LA4**	488	**S401_3.8 P100 BE100LA4**	**S401_3.8 P100 BX100LA4**	489
387	53	1.9	7.4	3540	**S501_7.4 S3 ME3LA2**		490	**S501_7.4 P90 BE90L2**		491
394	52	1.1	2.4	1260	**S301_2.4 S4 ME4SA6**		486	**S301_2.4 P112 BE112M6**		487
399	52	2.0	2.4	2450	**S401_2.4 S4 ME4SA6**		488	**S401_2.4 P112 BE112M6**		489
400	51	1.2	7.2	2460	**S401_7.2 S3 ME3LA2**		488	**S401_7.2 P90 BE90L2**		489
467	44	1.1	3.1	1240	**S301_3.1 S3 ME3LA4**	**S301_3.1 S3 MX3LA4**	486	**S301_3.1 P100 BE100LA4**	**S301_3.1 P100 BX100LA4**	487
468	44	2.0	3.1	2340	**S401_3.1 S3 ME3LA4**	**S401_3.1 S3 MX3LA4**	488	**S401_3.1 P100 BE100LA4**	**S401_3.1 P100 BX100LA4**	489
470	44	3.2	3.0	3340	**S501_3.0 S3 ME3LA4**	**S501_3.0 S3 MX3LA4**	490	**S501_3.0 P100 BE100LA4**	**S501_3.0 P100 BX100LA4**	491
472	44	1.6	6.1	2360	**S401_6.1 S3 ME3LA2**		488	**S401_6.1 P90 BE90L2**		489
473	44	2.3	6.1	3340	**S501_6.1 S3 ME3LA2**		490	**S501_6.1 P90 BE90L2**		491
490	42	1.0	5.8	1250	**S301_5.8 S3 ME3LA2**		486	**S301_5.8 P90 BE90L2**		487
516	40	1.8	1.9	2280	**S401_1.9 S4 ME4SA6**		488	**S401_1.9 P112 BE112M6**		489

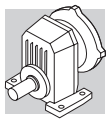

2.2 kW

n_2 min-1	M_2 Nm	S	i	R_{n2} N	IE2	IE3		IEC IE2	IEC IE3	
534	39	3.2	1.8	3210	**S501_1.8 S4 ME4SA6**		490	**S501_1.8 P112 BE112M6**		491
581	35	1.1	4.9	1220	**S301_4.9 S3 ME3LA2**		486	**S301_4.9 P90 BE90L2**		487
591	35	1.4	2.4	1190	**S301_2.4 S3 ME3LA4**	**S301_2.4 S3 MX3LA4**	486	**S301_2.4 P100 BE100LA4**	**S301_2.4 P100 BX100LA4**	487
593	35	2.0	4.8	2210	**S401_4.8 S3 ME3LA2**		488	**S401_4.8 P90 BE90L2**		489
598	34	2.6	2.4	2200	**S401_2.4 S3 ME3LA4**	**S401_2.4 S3 MX3LA4**	488	**S401_2.4 P100 BE100LA4**	**S401_2.4 P100 BX100LA4**	489
679	30	1.2	1.4	1140	**S301_1.4 S4 ME4SA6**		486	**S301_1.4 P112 BE112M6**		487
700	29	2.4	1.4	2090	**S401_1.4 S4 ME4SA6**		488	**S401_1.4 P112 BE112M6**		489
726	28	1.4	3.9	1160	**S301_3.9 S3 ME3LA2**		486	**S301_3.9 P90 BE90L2**		487
751	27	2.6	3.8	2070	**S401_3.8 S3 ME3LA2**		488	**S401_3.8 P90 BE90L2**		489
772	27	2.2	1.9	2040	**S401_1.9 S3 ME3LA4**	**S401_1.9 S3 MX3LA4**	488	**S401_1.9 P100 BE100LA4**	**S401_1.9 P100 BX100LA4**	489
783	26	1.1	1.8	1120	**S301_1.8 S3 ME3LA4**	**S301_1.8 S3 MX3LA4**	486	**S301_1.8 P100 BE100LA4**	**S301_1.8 P100 BX100LA4**	487
921	22	0.9	3.1	730	**S201_3.1 S3 ME3LA2**		484	**S201_3.1 P90 BE90L2**		485
936	22	1.8	3.1	1100	**S301_3.1 S3 ME3LA2**		486	**S301_3.1 P90 BE90L2**		487
1016	20	1.5	1.4	1050	**S301_1.4 S3 ME3LA4**	**S301_1.4 S3 MX3LA4**	486	**S301_1.4 P100 BE100LA4**	**S301_1.4 P100 BX100LA4**	487
1049	19.6	3.1	1.4	1860	**S401_1.4 S3 ME3LA4**	**S401_1.4 S3 MX3LA4**	488	**S401_1.4 P100 BE100LA4**	**S401_1.4 P100 BX100LA4**	489
1175	17.5	1.2	2.4	710	**S201_2.4 S3 ME3LA2**		484	**S201_2.4 P90 BE90L2**		485
1183	17.4	2.3	2.4	1030	**S301_2.4 S3 ME3LA2**		486	**S301_2.4 P90 BE90L2**		487
1512	13.6	1.0	1.9	670	**S201_1.9 S3 ME3LA2**		484	**S201_1.9 P90 BE90L2**		485
1569	13.1	1.8	1.8	960	**S301_1.8 S3 ME3LA2**		486	**S301_1.8 P90 BE90L2**		487
2036	10.1	2.4	1.4	890	**S301_1.4 S3 ME3LA2**		486	**S301_1.4 P90 BE90L2**		487
2059	10.0	1.3	1.4	630	**S201_1.4 S3 ME3LA2**		484	**S201_1.4 P90 BE90L2**		485

3 kW

n_2 min-1	M_2 Nm	S	i	R_{n2} N	IE2	IE3		IEC IE2	IEC IE3	
201	140	1.3	4.8	4040	**S501_4.8 S4 ME4SB6**		490	**S501_4.8 P132 BE132S6**		491
238	119	1.1	6.1	3910	**S501_6.1 S3 ME3LB4**	**S501_6.1 S3 MX3LB4**	490	**S501_6.1 P100 BE100LB4**	**S501_6.1 P100 BX100LB4**	491
249	113	1.5	3.8	3840	**S501_3.8 S4 ME4SB6**		490	**S501_3.8 P132 BE132S6**		491
298	95	1.0	4.8	2490	**S401_4.8 S3 ME3LB4**	**S401_4.8 S3 MX3LB4**	488	**S401_4.8 P100 BE100LB4**	**S401_4.8 P100 BX100LB4**	489
303	93	1.6	4.8	3670	**S501_4.8 S3 ME3LB4**	**S501_4.8 S3 MX3LB4**	490	**S501_4.8 P100 BE100LB4**	**S501_4.8 P100 BX100LB4**	491
313	90	1.2	3.1	2440	**S401_3.1 S4 ME4SB6**		488	**S401_3.1 P132 BE132S6**		489
314	89	1.8	3.0	3630	**S501_3.0 S4 ME4SB6**		490	**S501_3.0 P132 BE132S6**		491
328	85	1.0	8.8	3600	**S501_8.8 S3 ME3LB2**		490	**S501_8.8 P100 BE100L2**		491
375	75	2.0	3.8	3470	**S501_3.8 S3 ME3LB4**	**S501_3.8 S3 MX3LB4**	490	**S501_3.8 P100 BE100LB4**	**S501_3.8 P100 BX100LB4**	491
378	75	1.2	3.8	2370	**S401_3.8 S3 ME3LB4**	**S401_3.8 S3 MX3LB4**	488	**S401_3.8 P100 BE100LB4**	**S401_3.8 P100 BX100LB4**	489
389	72	1.4	7.4	3440	**S501_7.4 S3 ME3LB2**		490	**S501_7.4 P100 BE100L2**		491
397	71	2.1	2.4	3390	**S501_2.4 S4 ME4SB6**		490	**S501_2.4 P132 BE132S6**		491
399	70	1.5	2.4	2320	**S401_2.4 S4 ME4SB6**		488	**S401_2.4 P132 BE132S6**		489
472	60	1.5	3.1	2250	**S401_3.1 S3 ME3LB4**	**S401_3.1 S3 MX3LB4**	488	**S401_3.1 P100 BE100LB4**	**S401_3.1 P100 BX100LB4**	489
473	60	2.3	3.0	3260	**S501_3.0 S3 ME3LB4**	**S501_3.0 S3 MX3LB4**	490	**S501_3.0 P100 BE100LB4**	**S501_3.0 P100 BX100LB4**	491
516	54	1.3	1.9	2170	**S401_1.9 S4 ME4SB6**		488	**S401_1.9 P132 BE132S6**		489
534	53	2.4	1.8	3120	**S501_1.8 S4 ME4SB6**		490	**S501_1.8 P132 BE132S6**		491
595	47	1.1	2.4	1080	**S301_2.4 S3 ME3LB4**	**S301_2.4 S3 MX3LB4**	486	**S301_2.4 P100 BE100LB4**	**S301_2.4 P100 BX100LB4**	487
596	47	1.5	4.8	2130	**S401_4.8 S3 ME3LB2**		488	**S401_4.8 P100 BE100L2**		489
598	47	2.8	2.4	3040	**S501_2.4 S3 ME3LB4**	**S501_2.4 S3 MX3LB4**	490	**S501_2.4 P100 BE100LB4**	**S501_2.4 P100 BX100LB4**	491
602	47	1.9	2.4	2120	**S401_2.4 S3 ME3LB4**	**S401_2.4 S3 MX3LB4**	488	**S401_2.4 P100 BE100LB4**	**S401_2.4 P100 BX100LB4**	489
606	46	2.6	4.8	3030	**S501_4.8 S3 ME3LB2**		490	**S501_4.8 P100 BE100L2**		491
672	42	3.0	1.4	2920	**S501_1.4 S4 ME4SB6**		490	**S501_1.4 P132 BE132S6**		491
700	40	1.7	1.4	2010	**S401_1.4 S4 ME4SB6**		488	**S401_1.4 P132 BE132S6**		489
730	38	1.0	3.9	1070	**S301_3.9 S3 ME3LB2**		486	**S301_3.9 P100 BE100L2**		487
755	37	1.9	3.8	2000	**S401_3.8 S3 ME3LB2**		488	**S401_3.8 P100 BE100L2**		489
778	36	1.7	1.9	1970	**S401_1.9 S3 ME3LB4**	**S401_1.9 S3 MX3LB4**	488	**S401_1.9 P100 BE100LB4**	**S401_1.9 P100 BX100LB4**	489
789	36	0.8	1.8	900	**S301_1.8 S3 ME3LB4**	**S301_1.8 S3 MX3LB4**	486	**S301_1.8 P100 BE100LB4**	**S301_1.8 P100 BX100LB4**	487

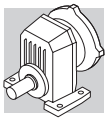

3 kW

n_2 min-1	M_2 Nm	S	i	R_{n2} N	IE2	IE3		IEC IE2	IEC IE3	
805	35	3.1	1.8	2780	**S501_1.8 S3 ME3LB4**	**S501_1.8 S3 MX3LB4**	490	**S501_1.8 P100 BE100LB4**	**S501_1.8 P100 BX100LB4**	491
940	30	1.3	3.1	1020	**S301_3.1 S3 ME3LB2**		486	**S301_3.1 P100 BE100L2**		487
943	30	2.4	3.1	1880	**S401_3.1 S3 ME3LB2**		488	**S401_3.1 P100 BE100L2**		489
1023	28	1.1	1.4	980	**S301_1.4 S3 ME3LB4**	**S301_1.4 S3 MX3LB4**	486	**S301_1.4 P100 BE100LB4**	**S301_1.4 P100 BX100LB4**	487
1056	27	2.2	1.4	1820	**S401_1.4 S3 ME3LB4**	**S401_1.4 S3 MX3LB4**	488	**S401_1.4 P100 BE100LB4**	**S401_1.4 P100 BX100LB4**	489
1190	24	1.7	2.4	980	**S301_2.4 S3 ME3LB2**		486	**S301_2.4 P100 BE100L2**		487
1204	23	3.0	2.4	1760	**S401_2.4 S3 ME3LB2**		488	**S401_2.4 P100 BE100L2**		489
1555	18.1	2.7	1.9	1630	**S401_1.9 S3 ME3LB2**		488	**S401_1.9 P100 BE100L2**		489
1577	17.8	1.3	1.8	910	**S301_1.8 S3 ME3LB2**		486	**S301_1.8 P100 BE100L2**		487
2046	13.7	1.7	1.4	850	**S301_1.4 S3 ME3LB2**		486	**S301_1.4 P100 BE100L2**		487
2070	13.6	1.0	1.4	580	**S201_1.4 S3 ME3LB2**		484	**S201_1.4 P100 BE100L2**		485

4 kW

n_2 min-1	M_2 Nm	S	i	R_{n2} N	IE2	IE3		IEC IE2	IEC IE3	
203	184	0.9	4.8	3810	**S501_4.8 S4 ME4LA6**		490	**S501_4.8 P132 BE132MA6**		491
251	149	1.2	3.8	3650	**S501_3.8 S4 ME4LA6**		490	**S501_3.8 P132 BE132MA6**		491
303	126	1.2	4.8	3530	**S501_4.8 S4 ME4SA4**	**S501_4.8 S4 MX4SA4**	490	**S501_4.8 P112 BE112M4**	**S501_4.8 P112 BX112M4**	491
317	118	1.4	3.0	3470	**S501_3.0 S4 ME4LA6**		490	**S501_3.0 P132 BE132MA6**		491
375	102	1.5	3.8	3360	**S501_3.8 S4 ME4SA4**	**S501_3.8 S4 MX4SA4**	490	**S501_3.8 P112 BE112M4**	**S501_3.8 P112 BX112M4**	491
392	96	1.0	7.4	3320	**S501_7.4 S4 ME4SA2**		490	**S501_7.4 P112 BE112M2**		491
401	93	1.6	2.4	3270	**S501_2.4 S4 ME4LA6**		490	**S501_2.4 P132 BE132MA6**		491
472	81	1.1	3.1	2130	**S401_3.1 S4 ME4SA4**	**S401_3.1 S4 MX4SA4**	488	**S401_3.1 P112 BE112M4**	**S401_3.1 P112 BX112M4**	489
473	81	1.7	3.0	3170	**S501_3.0 S4 ME4SA4**	**S501_3.0 S4 MX4SA4**	490	**S501_3.0 P112 BE112M4**	**S501_3.0 P112 BX112M4**	491
479	78	1.3	6.1	3160	**S501_6.1 S4 ME4SA2**		490	**S501_6.1 P112 BE112M2**		491
521	72	1.0	1.9	2050	**S401_1.9 S4 ME4LA6**		488	**S401_1.9 P132 BE132MA6**		489
540	69	1.8	1.8	3020	**S501_1.8 S4 ME4LA6**		490	**S501_1.8 P132 BE132MA6**		491
598	64	2.0	2.4	2970	**S501_2.4 S4 ME4SA4**	**S501_2.4 S4 MX4SA4**	490	**S501_2.4 P112 BE112M4**	**S501_2.4 P112 BX112M4**	491
602	63	1.4	2.4	2030	**S401_2.4 S4 ME4SA4**	**S401_2.4 S4 MX4SA4**	488	**S401_2.4 P112 BE112M4**	**S401_2.4 P112 BX112M4**	489
611	61	2.0	4.8	2960	**S501_4.8 S4 ME4SA2**		490	**S501_4.8 P112 BE112M2**		491
679	55	2.3	1.4	2830	**S501_1.4 S4 ME4LA6**		490	**S501_1.4 P132 BE132MA6**		491
708	53	1.3	1.4	1920	**S401_1.4 S4 ME4LA6**		488	**S401_1.4 P132 BE132MA6**		489
755	50	2.4	3.8	2790	**S501_3.8 S4 ME4SA2**		490	**S501_3.8 P112 BE112M2**		491
761	49	1.4	3.8	1930	**S401_3.8 S4 ME4SA2**		488	**S401_3.8 P112 BE112M2**		489
778	49	1.2	1.9	1900	**S401_1.9 S4 ME4SA4**	**S401_1.9 S4 MX4SA4**	488	**S401_1.9 P112 BE112M4**	**S401_1.9 P112 BX112M4**	489
805	47	2.3	1.8	2730	**S501_1.8 S4 ME4SA4**	**S501_1.8 S4 MX4SA4**	490	**S501_1.8 P112 BE112M4**	**S501_1.8 P112 BX112M4**	491
953	39	2.8	3.0	2610	**S501_3.0 S4 ME4SA2**		490	**S501_3.0 P112 BE112M2**		491
950	39	1.8	3.1	1820	**S401_3.1 S4 ME4SA2**		488	**S401_3.1 P112 BE112M2**		489
1013	38	2.9	1.4	2560	**S501_1.4 S4 ME4SA4**	**S501_1.4 S4 MX4SA4**	490	**S501_1.4 P112 BE112M4**	**S501_1.4 P112 BX112M4**	491
1056	36	1.7	1.4	1760	**S401_1.4 S4 ME4SA4**	**S401_1.4 S4 MX4SA4**	488	**S401_1.4 P112 BE112M4**	**S401_1.4 P112 BX112M4**	489
1198	31	1.3	2.4	910	**S301_2.4 S4 ME4SA2**		486	**S301_2.4 P112 BE112M2**		487
1213	31	2.3	2.4	1710	**S401_2.4 S4 ME4SA2**		488	**S401_2.4 P112 BE112M2**		489
1566	24	2.0	1.9	1590	**S401_1.9 S4 ME4SA2**		488	**S401_1.9 P112 BE112M2**		489
1588	24	1.0	1.8	860	**S301_1.8 S4 ME4SA2**		486	**S301_1.8 P112 BE112M2**		487
2061	18.2	1.3	1.4	810	**S301_1.4 S4 ME4SA2**		486	**S301_1.4 P112 BE112M2**		487
2127	17.6	2.7	1.4	1460	**S401_1.4 S4 ME4SA2**		488	**S401_1.4 P112 BE112M2**		489

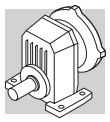

5.5 kW

n_2 min-1	M_2 Nm	S	i	R_{n2} N	IE2	IE3		IEC IE2	IEC IE3	
317	162	1.0	3.0	3260	**S501_3.0 S5 ME5SA6**		490	**S501_3.0 P160 BE160MA6**		491
380	136	1.1	3.8	3150	**S501_3.8 S4 ME4SB4**	**S501_3.8 S4 MX4SB4**	490	**S501_3.8 P132 BE132S4**	**S501_3.8 P132 BX132SB4**	491
401	128	1.2	2.4	3090	**S501_2.4 S5 ME5SA6**		490	**S501_2.4 P160 BE160MA6**		491
480	107	1.3	3.0	3000	**S501_3.0 S4 ME4SB4**	**S501_3.0 S4 MX4SB4**	490	**S501_3.0 P132 BE132S4**	**S501_3.0 P132 BX132SB4**	491
540	95	1.3	1.8	2880	**S501_1.8 S5 ME5SA6**		490	**S501_1.8 P160 BE160MA6**		491
606	85	1.5	2.4	2830	**S501_2.4 S4 ME4SB4**	**S501_2.4 S4 MX4SB4**	490	**S501_2.4 P132 BE132S4**	**S501_2.4 P132 BX132SB4**	491
611	84	1.1	2.4	1870	**S401_2.4 S4 ME4SB4**	**S401_2.4 S4 MX4SB4**	488	**S401_2.4 P132 BE132S4**	**S401_2.4 P132 BX132SB4**	489
616	84	1.4	4.8	2840	**S501_4.8 S4 ME4SB2**		490	**S501_4.8 P132 BE132SA2**		491
679	76	1.6	1.4	2720	**S501_1.4 S5 ME5SA6**		490	**S501_1.4 P160 BE160MA6**		491
708	73	1.0	1.4	1780				**S401_1.4 P160 BE160MA6**		489
761	68	1.8	3.8	2690	**S501_3.8 S4 ME4SB2**		490	**S501_3.8 P132 BE132SA2**		491
767	67	1.0	3.8	1810	**S401_3.8 S4 ME4SB2**		488	**S401_3.8 P132 BE132SA2**		489
788	65	0.9	1.9	1770	**S401_1.9 S4 ME4SB4**	**S401_1.9 S4 MX4SB4**	488	**S401_1.9 P132 BE132S4**	**S401_1.9 P132 BX132SB4**	489
817	63	1.7	1.8	2610	**S501_1.8 S4 ME4SB4**	**S501_1.8 S4 MX4SB4**	490	**S501_1.8 P132 BE132S4**	**S501_1.8 P132 BX132SB4**	491
958	54	1.3	3.1	1730	**S401_3.1 S4 ME4SB2**		488	**S401_3.1 P132 BE132SA2**		489
961	54	2.1	3.0	2530	**S501_3.0 S4 ME4SB2**		490	**S501_3.0 P132 BE132SA2**		491
1027	50	2.2	1.4	2450	**S501_1.4 S4 ME4SB4**	**S501_1.4 S4 MX4SB4**	490	**S501_1.4 P132 BE132S4**	**S501_1.4 P132 BX132SB4**	491
1071	48	1.2	1.4	1660	**S401_1.4 S4 ME4SB4**	**S401_1.4 S4 MX4SB4**	488	**S401_1.4 P132 BE132S4**	**S401_1.4 P132 BX132SB4**	489
1215	42	2.4	2.4	2370	**S501_2.4 S4 ME4SB2**		490	**S501_2.4 P132 BE132SA2**		491
1223	42	1.7	2.4	1640	**S401_2.4 S4 ME4SB2**		488	**S401_2.4 P132 BE132SA2**		489
1580	33	1.5	1.9	1530	**S401_1.9 S4 ME4SB2**		488	**S401_1.9 P132 BE132SA2**		489
1636	31	2.7	1.8	2170	**S501_1.8 S4 ME4SB2**		490	**S501_1.8 P132 BE132SA2**		491
2058	25	3.4	1.4	2030	**S501_1.4 S4 ME4SB2**		490	**S501_1.4 P132 BE132SA2**		491
2145	24	2.0	1.4	1410	**S401_1.4 S4 ME4SB2**		488	**S401_1.4 P132 BE132SA2**		489

7.5 kW

n_2 min-1	M_2 Nm	S	i	R_{n2} N	IE2	IE3		IEC IE2	IEC IE3	
478	146	1.0	3.0	2810	**S501_3.0 S4 ME4LA4**	**S501_3.0 S4 MX4LA4**	490	**S501_3.0 P132 BE132MA4**	**S501_3.0 P132 BX132MA4**	491
540	130	1.0	1.8	2690	**S501_1.8 S5 ME5SB6**		490	**S501_1.8 P160 BE160MB6**		491
604	116	1.1	2.4	2670	**S501_2.4 S4 ME4LA4**	**S501_2.4 S4 MX4LA4**	490	**S501_2.4 P132 BE132MA4**	**S501_2.4 P132 BX132MA4**	491
679	103	1.2	1.4	2560	**S501_1.4 S5 ME5SB6**		490	**S501_1.4 P160 BE160MB6**		491
761	92	1.3	3.8	2570	**S501_3.8 S4 ME4LA2**		490	**S501_3.8 P132 BE132SB2**		491
814	86	1.3	1.8	2490	**S501_1.8 S4 ME4LA4**	**S501_1.8 S4 MX4LA4**	490	**S501_1.8 P132 BE132MA4**	**S501_1.8 P132 BX132MA4**	491
958	73	1.0	3.1	1610	**S401_3.1 S4 ME4LA2**		488	**S401_3.1 P132 BE132SB2**		489
961	73	1.5	3.0	2440	**S501_3.0 S4 ME4LA2**		490	**S501_3.0 P132 BE132SB2**		491
1024	68	1.6	1.4	2350	**S501_1.4 S4 ME4LA4**	**S501_1.4 S4 MX4LA4**	490	**S501_1.4 P132 BE132MA4**	**S501_1.4 P132 BX132MA4**	491
1067	65	0.9	1.4	1540	**S401_1.4 S4 ME4LA4**	**S401_1.4 S4 MX4LA4**	488	**S401_1.4 P132 BE132MA4**	**S401_1.4 P132 BX132MA4**	489
1215	58	1.7	2.4	2290	**S501_2.4 S4 ME4LA2**		490	**S501_2.4 P132 BE132SB2**		491
1223	57	1.2	2.4	1540	**S401_2.4 S4 ME4LA2**		488	**S401_2.4 P132 BE132SB2**		489
1580	44	1.1	1.9	1450	**S401_1.9 S4 ME4LA2**		488	**S401_1.9 P132 BE132SB2**		489
1636	43	2.0	1.8	2110	**S501_1.8 S4 ME4LA2**		490	**S501_1.8 P132 BE132SB2**		491
2058	34	2.5	1.4	1980	**S501_1.4 S4 ME4LA2**		490	**S501_1.4 P132 BE132SB2**		491
2145	33	1.5	1.4	1350	**S401_1.4 S4 ME4LA2**		488	**S401_1.4 P132 BE132SB2**		489

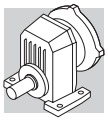

9.2 kW

n_2 min-1	M_2 Nm	S	i	R_{n2} N	IE2	IE3		IEC IE2	IEC IE3	
602	144	0.9	2.4	2530	**S501_2.4 S4 ME4LB4**	**S501_2.4 S5 MX5SA4**	490	**S501_2.4 P132 BE132MB4**	**S501_2.4 P160 BX160MA4**	491
760	113	1.1	3.8	2470	**S501_3.8 S4 ME4LB2**		490	**S501_3.8 P132 BE132MB2**		491
811	107	1.0	1.8	2390	**S501_1.8 S4 ME4LB4**	**S501_1.8 S5 MX5SA4**	490	**S501_1.8 P132 BE132MB4**	**S501_1.8 P160 BX160MA4**	491
959	90	1.2	3.0	2360	**S501_3.0 S4 ME4LB2**		490	**S501_3.0 P132 BE132MB2**		491
1020	85	1.3	1.4	2270	**S501_1.4 S4 ME4LB4**	**S501_1.4 S5 MX5SA4**	490	**S501_1.4 P132 BE132MB4**	**S501_1.4 P160 BX160MA4**	491
1213	71	1.4	2.4	2220	**S501_2.4 S4 ME4LB2**		490	**S501_2.4 P132 BE132MB2**		491
1221	71	1.0	2.4	1460	**S401_2.4 S4 ME4LB2**		488	**S401_2.4 P132 BE132MB2**		489
1633	53	1.6	1.8	2060	**S501_1.8 S4 ME4LB2**		490	**S501_1.8 P132 BE132MB2**		491
2055	42	2.0	1.4	1930	**S501_1.4 S4 ME4LB2**		490	**S501_1.4 P132 BE132MB2**		491
2141	40	1.2	1.4	1300	**S401_1.4 S4 ME4LB2**		488	**S401_1.4 P132 BE132MB2**		489

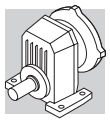

S 10 — 21 Nm

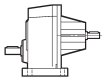	i	n_1 = 2800 min^{-1}					n_1 = 1400 min^{-1}					
		n_2 min^{-1}	M_{n2} Nm	P_{n1} kW	R_{n1} N	R_{n2} N	n_2 min^{-1}	M_{n2} Nm	P_{n1} kW	R_{n1} N	R_{n2} N	
S 10 1_1.4	1.4	1972	8.0	1.7	800	310	986	10.0	1.1	800	390	483
S 10 1_1.9	1.9	1489	8.0	1.3	800	360	745	10.0	0.80	800	460	
S 10 1_2.5	2.5	1120	8.0	0.96	800	420	560	10.0	0.60	800	520	
S 10 1_3.2	3.2	875	10.0	0.93	800	440	438	12.0	0.56	800	560	
S 10 1_3.8	3.8	727	10.0	0.78	800	480	364	12.0	0.47	800	610	
S 10 1_4.7	4.7	592	10.0	0.63	800	520	296	12.0	0.38	800	660	
S 10 1_6.1	6.1	458	12.0	0.59	800	560	229	15.0	0.37	800	710	
S 10 1_6.9	6.9	406	12.0	0.52	800	580	203	15.0	0.33	800	740	
S 10 1_8.9	8.9	315	8.0	0.27	800	700	158	10.0	0.17	800	880	
S 10 1_10.3	10.3	272	8.0	0.23	800	740	136	10.0	0.15	800	930	
S 10 1_12.3	12.3	227	8.0	0.19	800	800	114	10.0	0.12	800	1000	

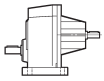	i	n_1 = 900 min^{-1}					n_1 = 500 min^{-1}					
		n_2 min^{-1}	M_{n2} Nm	P_{n1} kW	R_{n1} N	R_{n2} N	n_2 min^{-1}	M_{n2} Nm	P_{n1} kW	R_{n1} N	R_{n2} N	
S 10 1_1.4	1.4	634	12.0	0.81	800	450	352	14.0	0.53	800	560	483
S 10 1_1.9	1.9	479	12.0	0.61	800	520	266	14.0	0.40	800	640	
S 10 1_2.5	2.5	360	12.0	0.46	800	600	200	14.0	0.30	800	740	
S 10 1_3.2	3.2	281	14.0	0.42	800	650	156	17.0	0.28	800	790	
S 10 1_3.8	3.8	234	14.0	0.35	800	700	130	17.0	0.24	800	850	
S 10 1_4.7	4.7	190	14.0	0.28	800	770	106	17.0	0.19	800	930	
S 10 1_6.1	6.1	147	17.0	0.27	800	820	82	21	0.18	800	1000	
S 10 1_6.9	6.9	130	17.0	0.24	800	860	72	21	0.16	800	1040	
S 10 1_8.9	8.9	101	12.0	0.13	800	1020	56	14.0	0.08	800	1200	
S 10 1_10.3	10.3	87	12.0	0.11	800	1080	49	14.0	0.07	800	1200	
S 10 1_12.3	12.3	73	12.0	0.09	800	1160	41	14.0	0.06	800	1200	

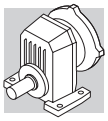

S 20 — 37 Nm

	i	n_1 = 2800 min^{-1}					n_1 = 1400 min^{-1}					
		n_2 min^{-1}	M_{n2} Nm	P_{n1} kW	R_{n1} N	R_{n2} N	n_2 min^{-1}	M_{n2} Nm	P_{n1} kW	R_{n1} N	R_{n2} N	
S 20 1_1.4	1.4	2014	13.0	2.8	1000	590	1007	17.0	1.8	1000	740	
S 20 1_1.9	1.9	1481	13.0	2.1	1000	680	741	17.0	1.3	1000	860	
S 20 1_2.4	2.4	1148	21	2.6	640	680	574	26	1.6	850	860	
S 20 1_3.1	3.1	900	21	2.0	730	750	450	26	1.3	960	950	
S 20 1_3.9	3.9	712	21	1.6	820	840	356	26	0.99	1000	1060	
S 20 1_4.8	4.8	587	21	1.3	910	920	294	26	0.82	1000	1160	485
S 20 1_5.8	5.8	481	21	1.1	960	1000	241	26	0.67	1000	1260	
S 20 1_7.2	7.2	388	21	0.87	980	1090	194	26	0.54	1000	1370	
S 20 1_8.5	8.5	329	13.0	0.46	1000	1240	165	17.0	0.30	1000	1500	
S 20 1_10.8	10.8	260	13.0	0.36	1000	1350	130	17.0	0.24	1000	1500	
S 20 1_12.4	12.4	225	13.0	0.31	1000	1430	113	17.0	0.20	1000	1500	

	i	n_1 = 900 min^{-1}					n_1 = 500 min^{-1}					
		n_2 min^{-1}	M_{n2} Nm	P_{n1} kW	R_{n1} N	R_{n2} N	n_2 min^{-1}	M_{n2} Nm	P_{n1} kW	R_{n1} N	R_{n2} N	
S 20 1_1.4	1.4	647	20	1.4	1000	850	360	24	0.92	1000	1040	
S 20 1_1.9	1.9	476	20	1.0	1000	990	265	24	0.68	1000	1210	
S 20 1_2.4	2.4	369	30	1.2	990	990	205	37	0.81	1000	1200	
S 20 1_3.1	3.1	289	30	0.93	1000	1110	161	37	0.64	1000	1340	
S 20 1_3.9	3.9	229	30	0.73	1000	1230	127	37	0.50	1000	1490	
S 20 1_4.8	4.8	189	30	0.60	1000	1350	105	37	0.41	1000	1500	485
S 20 1_5.8	5.8	155	30	0.50	1000	1460	86	37	0.34	1000	1500	
S 20 1_7.2	7.2	125	30	0.40	1000	1500	69	37	0.27	1000	1500	
S 20 1_8.5	8.5	106	20	0.23	1000	1500	59	24	0.15	1000	1500	
S 20 1_10.8	10.8	84	20	0.18	1000	1500	47	24	0.12	1000	1500	
S 20 1_12.4	12.4	72	20	0.15	1000	1500	40	24	0.10	1000	1500	

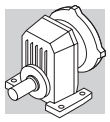

S 30 — 70 Nm

	i	n_1 = 2800 min^{-1}					n_1 = 1400 min^{-1}					
		n_2 min^{-1}	M_{n2} Nm	P_{n1} kW	R_{n1} N	R_{n2} N	n_2 min^{-1}	M_{n2} Nm	P_{n1} kW	R_{n1} N	R_{n2} N	
S 30 1_1.4	1.4	1986	24	5.1	1500	770	993	30	3.2	1500	970	
S 30 1_1.8	1.8	1530	24	3.9	1500	870	765	30	2.5	1500	1090	
S 30 1_2.4	2.4	1157	40	4.9	1270	850	579	50	3.1	1500	1070	
S 30 1_3.1	3.1	915	40	3.9	1470	950	458	50	2.4	1500	1200	
S 30 1_3.9	3.9	711	40	3.0	1500	1070	355	50	1.9	1500	1360	
S 30 1_4.9	4.9	568	40	2.4	1500	1190	284	50	1.5	1500	1500	487
S 30 1_5.8	5.8	479	40	2.0	1500	1280	239	50	1.3	1500	1610	
S 30 1_7.1	7.1	395	40	1.7	1500	1390	197	50	1.1	1500	1750	
S 30 1_8.9	8.9	315	24	0.81	1500	1650	157	30	0.50	1500	2080	
S 30 1_10.3	10.3	272	24	0.70	1500	1740	136	30	0.44	1500	2190	
S 30 1_13.1	13.1	213	24	0.55	1500	1900	107	30	0.34	1500	2400	

	i	n_1 = 900 min^{-1}					n_1 = 500 min^{-1}					
		n_2 min^{-1}	M_{n2} Nm	P_{n1} kW	R_{n1} N	R_{n2} N	n_2 min^{-1}	M_{n2} Nm	P_{n1} kW	R_{n1} N	R_{n2} N	
S 30 1_1.4	1.4	638	35	2.4	1500	1120	355	42	1.6	1500	1360	
S 30 1_1.8	1.8	492	35	1.8	1500	1260	273	42	1.2	1500	1540	
S 30 1_2.4	2.4	372	58	2.3	1500	1240	207	70	1.5	1500	1510	
S 30 1_3.1	3.1	294	58	1.8	1500	1390	163	70	1.2	1500	1700	
S 30 1_3.9	3.9	228	58	1.4	1500	1570	127	70	0.95	1500	1920	
S 30 1_4.9	4.9	183	58	1.1	1500	1740	101	70	0.76	1500	2120	487
S 30 1_5.8	5.8	154	58	0.95	1500	1870	85	70	0.64	1500	2280	
S 30 1_7.1	7.1	127	58	0.79	1500	2030	71	62	0.47	1500	2400	
S 30 1_8.9	8.9	101	35	0.38	1500	2400	56	42	0.25	1500	2400	
S 30 1_10.3	10.3	87	35	0.33	1500	2400	49	42	0.22	1500	2400	
S 30 1_13.1	13.1	69	35	0.26	1500	2400	38	37	0.15	1500	2400	

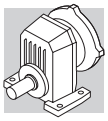

S 40 — 125 Nm

	i	n_1 = 2800 min^{-1}					n_1 = 1400 min^{-1}					
		n_2 min^{-1}	M_{n2} Nm	P_{n1} kW	R_{n1} N	R_{n2} N	n_2 min^{-1}	M_{n2} Nm	P_{n1} kW	R_{n1} N	R_{n2} N	
S 40 1_1.4	1.4	2059	48	10.6	2000	1270	1029	60	6.6	2000	1600	
S 40 1_1.9	1.9	1514	48	7.8	2000	1450	757	60	4.9	2000	1830	
S 40 1_2.4	2.4	1172	70	8.8	1860	1490	586	90	5.6	2000	1870	
S 40 1_3.1	3.1	918	70	6.9	2000	1660	459	90	4.4	2000	2080	
S 40 1_3.8	3.8	735	70	5.5	2000	1830	367	90	3.5	2000	2290	
S 40 1_4.8	4.8	580	70	4.3	2000	2020	290	90	2.8	2000	2530	489
S 40 1_6.1	6.1	461	70	3.5	2000	2220	231	90	2.2	2000	2790	
S 40 1_7.2	7.2	392	63	2.6	2000	2410	196	80	1.7	2000	3030	
S 40 1_8.6	8.6	324	48	1.7	2000	2670	162	60	1.0	2000	3370	
S 40 1_10.7	10.7	262	40	1.1	2000	2930	131	50	0.70	2000	3690	
S 40 1_12.4	12.4	226	40	1.0	2000	3100	113	50	0.60	2000	3800	

	i	n_1 = 900 min^{-1}					n_1 = 500 min^{-1}					
		n_2 min^{-1}	M_{n2} Nm	P_{n1} kW	R_{n1} N	R_{n2} N	n_2 min^{-1}	M_{n2} Nm	P_{n1} kW	R_{n1} N	R_{n2} N	
S 40 1_1.4	1.4	662	70	4.9	2000	1850	368	85	3.3	2000	2250	
S 40 1_1.9	1.9	486	70	3.6	2000	2120	270	85	2.5	2000	2580	
S 40 1_2.4	2.4	377	105	4.2	2000	2160	209	125	2.8	2000	2650	
S 40 1_3.1	3.1	295	105	3.3	2000	2400	164	125	2.2	2000	2940	
S 40 1_3.8	3.8	236	105	2.7	2000	2650	131	125	1.8	2000	3240	
S 40 1_4.8	4.8	186	105	2.1	2000	2930	104	125	1.4	2000	3580	489
S 40 1_6.1	6.1	148	105	1.7	2000	3220	82	110	1.0	2000	3800	
S 40 1_7.2	7.2	126	90	1.2	2000	3530	70	90	0.67	2000	3800	
S 40 1_8.6	8.6	104	70	0.78	2000	3800	58	85	0.53	2000	3800	
S 40 1_10.7	10.7	84	58	0.52	2000	3800	47	70	0.35	2000	3800	
S 40 1_12.4	12.4	73	58	0.45	2000	3800	40	70	0.30	2000	3800	

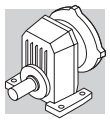

S 50 — 200 Nm

	i	n_1 = 2800 min^{-1}					n_1 = 1400 min^{-1}					
		n_2 min^{-1}	M_{n2} Nm	P_{n1} kW	R_{n1} N	R_{n2} N	n_2 min^{-1}	M_{n2} Nm	P_{n1} kW	R_{n1} N	R_{n2} N	
S 50 1_1.4	1.4	1972	85	17.9	730	1720	986	110	11.6	730	2150	
S 50 1_1.8	1.8	1564	85	14.2	1220	1920	782	110	9.2	1370	2400	
S 50 1_2.4	2.4	1162	100	12.4	930	2110	581	130	8.1	970	2640	
S 50 1_3.0	3.0	921	110	10.8	860	2300	461	140	6.9	1020	2880	
S 50 1_3.8	3.8	729	120	9.3	640	2480	365	150	5.8	860	3130	
S 50 1_4.8	4.8	589	120	7.6	880	2710	295	150	4.7	1160	3420	491
S 50 1_6.1	6.1	462	100	4.9	1980	3100	231	130	3.2	2330	3880	
S 50 1_7.4	7.4	378	100	4.0	2060	3340	189	130	2.6	2400	4190	
S 50 1_8.8	8.8	319	85	2.9	2400	3640	160	110	1.9	2400	4570	
S 50 1_10.5	10.5	268	85	2.4	2400	3880	134	110	1.6	2400	4870	
S 50 1_12.9	12.9	217	80	1.9	2400	4200	109	100	1.2	2400	5300	

	i	n_1 = 900 min^{-1}					n_1 = 500 min^{-1}					
		n_2 min^{-1}	M_{n2} Nm	P_{n1} kW	R_{n1} N	R_{n2} N	n_2 min^{-1}	M_{n2} Nm	P_{n1} kW	R_{n1} N	R_{n2} N	
S 50 1_1.4	1.4	634	125	8.5	1010	2510	352	155	5.8	1040	3040	
S 50 1_1.8	1.8	503	125	6.7	1730	2790	279	155	4.6	1940	3380	
S 50 1_2.4	2.4	373	150	6.0	1160	3060	207	180	4.0	1530	3730	
S 50 1_3.0	3.0	296	160	5.1	1290	3350	164	200	3.5	1310	4050	
S 50 1_3.8	3.8	234	175	4.4	940	3620	130	200	2.8	1740	4460	
S 50 1_4.8	4.8	189	175	3.5	1290	3960	105	180	2.0	2400	4970	491
S 50 1_6.1	6.1	149	150	2.4	2400	4500	83	150	1.3	2400	5620	
S 50 1_7.4	7.4	122	140	1.8	2400	4900	68	140	1.0	2400	6100	
S 50 1_8.8	8.8	103	125	1.4	2400	5310	57	125	0.80	2400	6580	
S 50 1_10.5	10.5	86	115	1.1	2400	5700	48	115	0.60	2400	7050	
S 50 1_12.9	12.9	70	100	0.70	2400	6210	39	100	0.40	2400	7200	

75 电机与减速机的组合范围

请注意下表中的中电机与减速机的组合，仅仅基于结构上的兼容性。

在选择减速电机时，参照第12章的步骤，并且满足条件S⩾ f_S。

(E 69)

		IEC_ 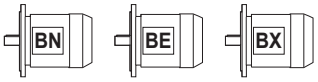 (IM B5)																					
		BN		BN	BE	BX	BN	BE	BX	BN	BE	BX	BN	BE	BX	BN	BE	BX	BN	BE	BX	BN	BE	BX
P_{n1}(#) [kW]	2p	0.37	0.75	1.5	1.1	—	2.2	2.2	—	4	3	—	4	4	—	9.2	9.2	—	18.5	18.5	—	22	—	—
	4p	0.25	0.55	1.1	0.75	0.75	1.85	1.5	1.5	3	3	3	4	4	4	9.2	9.2	7.5	15	15	15	22	22	22
	6p	0.12	0.37	0.75	—	—	1.1	0.75	—	1.85	1.5	—	2.2	2.2	—	5.5	4	—	11	7.5	—	15	—	—

		P63	P71	P80	P90	P100	P112	P132	P160	P180
S 10 1	i =	1.4_12.3	1.4_12.3	1.4_8.9	1.4_8.9	1.4_8.9	1.4_8.9			
S 20 1		1.9_12.4	1.9_12.4	1.4_10.8	1.4_10.8	1.4_10.8	1.4_10.8			
S 30 1		2.4_13.1	2.4_13.1	1.4_13.1	1.4_13.1	1.4_13.1	1.4_13.1	1.4_4.9		
S 40 1		3.1_12.4	3.1_12.4	1.4_12.4	1.4_12.4	1.4_12.4	1.4_12.4	1.4_6.1		
S 50 1		3.8_12.9	3.8_12.9	1.4_12.9	1.4_12.9	1.4_12.9	1.4_12.9	1.4_7.4	1.4_7.4	1.4_7.4

（#）P_{n1} 最大输入功率

(E 70)

		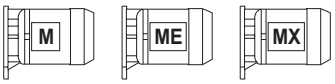					
		M05	M1	ME2 - MX2	ME3 - MX3	ME4 - MX4	ME5 - MX5
S 10 1	i =	1.4_12.3	1.4_6.9	1.4_8.9	1.4_8.9		
S 20 1		1.9_12.4	1.9_8.5	1.4_10.8	1.4_10.8		
S 30 1			2.4_10.3	1.4_13.1	1.4_13.1	1.4_4.9	
S 40 1			3.1_12.4	1.4_12.4	1.4_12.4	1.4_6.1	
S 50 1			3.8_12.9	1.4_12.9	1.4_12.9	1.4_7.4	1.4_7.4

76 转动惯量

下表列出的转动惯量J_r [kgm2]是指减速机高速轴。图例使用的符号如下：



这种图标下的数值指不带电机的紧凑型输入接口的减速机。加上紧凑型电机的转动惯量（在相关的额定值表中给出），可以得到总的转动惯量。



这种图标下的数值指带IEC电机接口的减速机(IEC 标准尺寸...)。

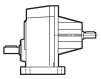

这种图标下的数值指带实心输入轴的减速机。

S 10

	i	J (•10-4) [kgm2]							
			IEC						
			63	71	80	90	100	112	
S 10 1_1.4	1.4	0.33	1.8	1.8	3.2	3.1	4.4	4.4	1.2
S 10 1_1.9	1.9	0.22	1.7	1.7	3.1	3.0	4.3	4.3	1.1
S 10 1_2.5	2.5	0.16	1.6	1.6	3.0	2.9	4.2	4.2	1.0
S 10 1_3.2	3.2	0.10	1.6	1.6	3.0	2.9	4.2	4.2	0.97
S 10 1_3.9	3.9	0.08	1.5	1.5	2.9	2.9	4.2	4.2	0.95
S 10 1_4.7	4.7	0.06	1.5	1.5	2.9	2.8	4.1	4.1	0.93
S 10 1_6.1	6.1	0.04	1.5	1.5	2.9	2.8	4.1	4.1	0.92
S 10 1_6.9	6.9	0.03	1.5	1.5	2.9	2.8	4.1	4.1	0.91
S 10 1_8.9	8.9	0.02	1.5	1.5	2.9	2.8	4.1	4.1	0.90
S 10 1_10.3	10.3	0.02	1.5	1.5	—	—	—	—	0.89
S 10 1_12.3	12.3	0.01	1.5	1.5	—	—	—	—	0.89

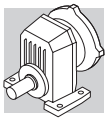

S 20

	i	J (•10-4) [kgm2]							
			IEC						
			63	71	80	90	100	112	
S 20 1_1.4	1.4	0.73	—	—	3.6	3.5	4.8	4.8	2.7
S 20 1_1.9	1.9	0.48	1.9	1.9	3.3	3.3	4.6	4.6	2.4
S 20 1_2.4	2.4	0.34	1.8	1.8	3.2	3.1	4.4	4.4	2.3
S 20 1_3.1	3.1	0.20	1.7	1.7	3.0	3.0	4.3	4.3	2.1
S 20 1_3.9	3.9	0.14	1.6	1.6	3.0	2.9	4.2	4.2	2.1
S 20 1_4.8	4.8	0.12	1.6	1.6	3.0	2.9	4.2	4.2	2.0
S 20 1_5.8	5.8	0.08	1.6	1.5	2.9	2.9	4.2	4.2	2.0
S 20 1_7.2	7.2	0.06	1.5	1.5	2.9	2.8	4.1	4.1	2.0
S 20 1_8.5	8.5	0.05	1.5	1.5	2.9	2.8	4.1	4.1	2.0
S 20 1_10.8	10.8	0.03	1.5	1.5	2.9	2.8	4.1	4.1	1.9
S 20 1_12.4	12.4	0.02	1.5	1.5	—	—	—	—	1.9

S 30

	i	J (•10-4) [kgm2]								
			IEC							
			63	71	80	90	100	112	132	
S 30 1_1.4	1.4	1.5	—	—	4.3	4.3	5.6	5.6	18	3.8
S 30 1_1.8	1.8	1.1	—	—	3.9	3.8	5.1	5.1	18	3.4
S 30 1_2.4	2.4	0.59	2.1	2.0	3.4	3.4	4.7	4.7	17	2.9
S 30 1_3.1	3.1	0.45	1.9	1.9	3.3	3.2	4.5	4.5	17	2.8
S 30 1_3.9	3.9	0.33	1.8	1.8	3.2	3.1	4.4	4.4	17	2.7
S 30 1_4.9	4.9	0.24	1.7	1.7	3.1	3.0	4.3	4.3	17	2.6
S 30 1_5.8	5.8	0.19	1.7	1.7	3.0	3.0	4.3	4.3	—	2.6
S 30 1_7.1	7.1	0.14	1.6	1.6	3.0	2.9	4.2	4.2	—	2.5
S 30 1_8.9	8.9	0.10	1.6	1.6	2.9	2.9	4.2	4.2	—	2.5
S 30 1_10.3	10.3	0.08	1.5	1.5	2.9	2.9	4.2	4.2	—	2.4
S 30 1_13.1	13.1	0.05	1.5	1.5	2.9	2.8	4.1	4.1	—	2.4

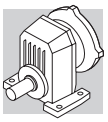

S 40

	i	J (•10-4) [kgm2]								
			IEC							
			63	71	80	90	100	112	132	
S 40 1_1.4	1.4	3.7	—	—	6.5	6.5	7.8	7.8	23	14
S 40 1_1.9	1.9	2.4	—	—	5.2	5.2	6.5	6.5	21	13
S 40 1_2.4	2.4	1.6	—	—	4.4	4.4	5.7	5.7	21	12
S 40 1_3.1	3.1	1.1	2.6	2.6	4.0	3.9	5.2	5.2	20	12
S 40 1_3.8	3.8	0.82	2.3	2.3	3.7	3.6	4.9	4.9	18	11
S 40 1_4.8	4.8	0.50	2.0	2.0	3.3	3.3	4.6	4.6	18	11
S 40 1_6.1	6.1	0.39	1.8	1.8	3.2	3.2	4.5	4.5	18	11
S 40 1_7.2	7.2	0.30	1.8	1.8	3.1	3.1	4.4	4.4	—	11
S 40 1_8.6	8.6	0.22	1.7	1.7	3.1	3.0	4.3	4.3	—	11
S 40 1_10.7	10.7	0.15	1.6	1.6	3.0	2.9	4.2	4.2	—	11
S 40 1_12.4	12.4	0.12	1.6	1.6	3.0	2.8	4.2	4.2	—	11

S 50

	i	J (•10-4) [kgm2]									
			IEC								
			63	71	80	90	100	112	132	160	180	
S 50 1_1.4	1.4	8.2	—	—	11	11	12	12	27	86	84	19
S 50 1_1.8	1.8	5.9	—	—	8.8	8.7	10	10	25	84	82	16
S 50 1_2.4	2.4	3.9	—	—	6.8	6.7	8.0	8.0	23	82	80	14
S 50 1_3.0	3.0	2.7	—	—	5.5	5.5	6.8	6.8	22	81	79	13
S 50 1_3.8	3.8	1.9	3.3	3.3	4.7	4.6	5.9	5.9	21	80	78	12
S 50 1_4.8	4.8	1.4	2.8	2.8	4.2	4.1	5.4	5.4	21	79	77	12
S 50 1_6.1	6.1	0.89	2.4	2.4	3.7	3.7	5.0	5.0	21	79	77	11
S 50 1_7.4	7.4	0.63	2.1	2.1	3.5	3.4	4.7	4.7	20	79	77	11
S 50 1_8.8	8.8	0.50	2.0	2.0	3.4	3.3	4.6	4.6	—	—	—	11
S 50 1_10.5	10.5	0.36	1.8	1.8	3.2	3.1	4.4	4.4	—	—	—	11
S 50 1_12.9	12.9	0.25	1.7	1.7	3.1	3.0	4.3	4.3	—	—	—	11

77 尺寸

S 10...M/ME/MX

P

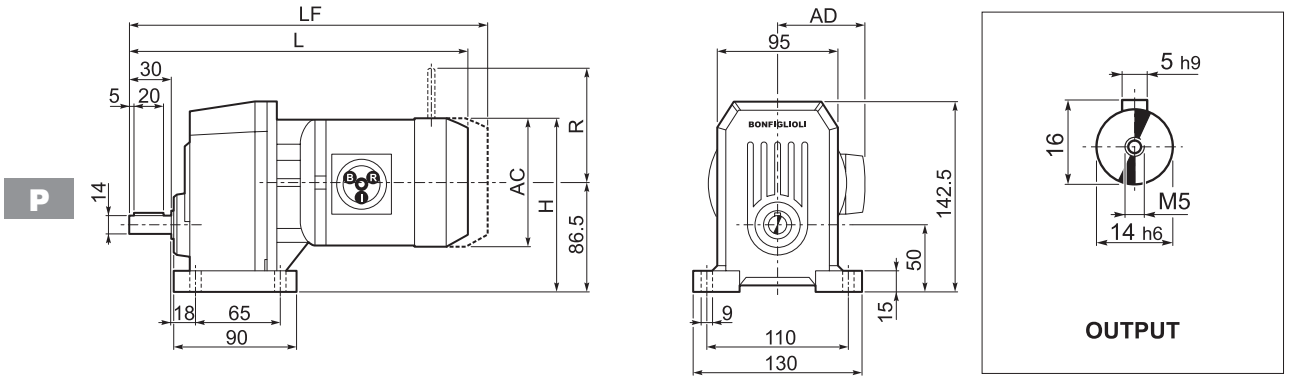

F

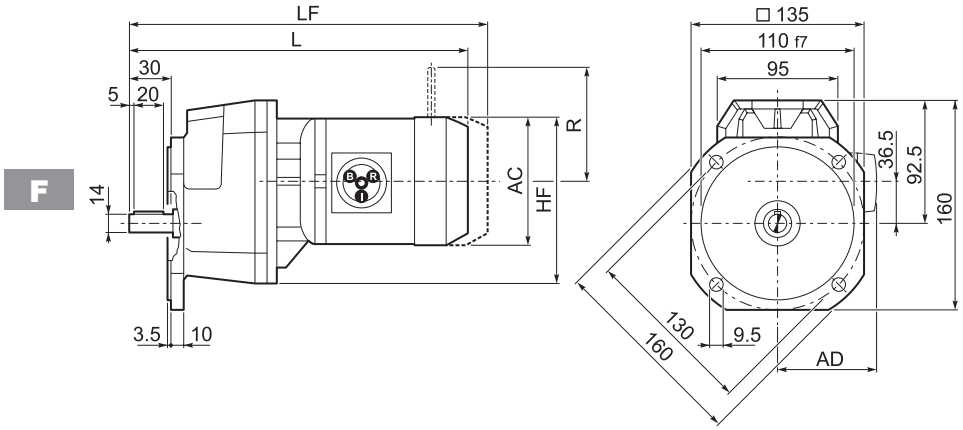

									M...FD M...FA		M...FD		M...FA	
			AC	H	HF	L	AD	Kg	LF	Kg	R	AD	R	AD
S 10 1	**S05**	**M05**	121	147	143	315	95	8	381	11	96	122	116	95
S 10 1	**S1**	**M1**	137	155	151	344	102	10	405	13	103	135	124	108
S 10 1	**S2**	**M2S**	156	164	160	367	111	13	443	17	129	146	134	119
S 10 1	**S2**	**ME2S**	156	164	160	367	111	13	—	—	—	—	—	—
S 10 1	**S2**	**MX2S**	156	164	160	411	111	18.1	—	—	—	—	—	—
S 10 1	**S3**	**ME3S**	195	184	180	416	135	20.5	—	—	—	—	—	—
S 10 1	**S3**	**MX3S**	195	184	180	448	135	23.5	—	—	—	—	—	—
S 10 1	**S3**	**ME3L**	195	184	180	448	135	21	—	—	—	—	—	—
S 10 1	**S3**	**MX3L**	195	184	180	492	135	27	—	—	—	—	—	—

S 10...P (IEC)

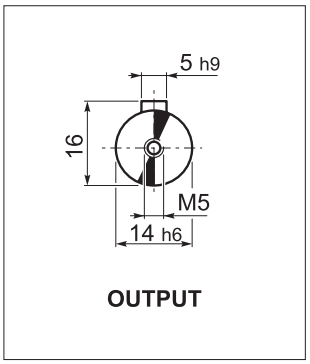

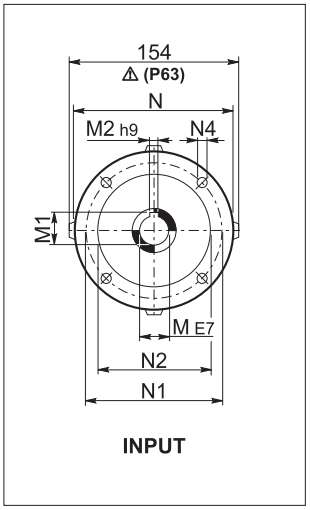

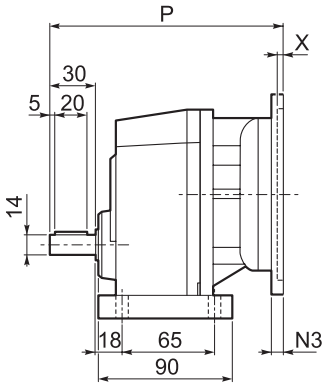

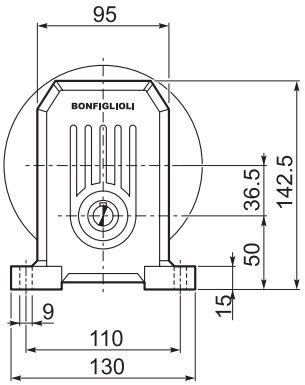

P

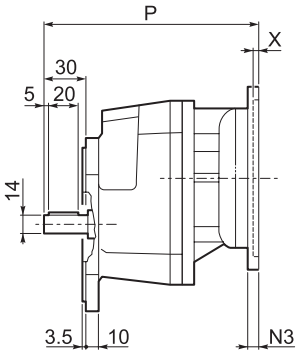

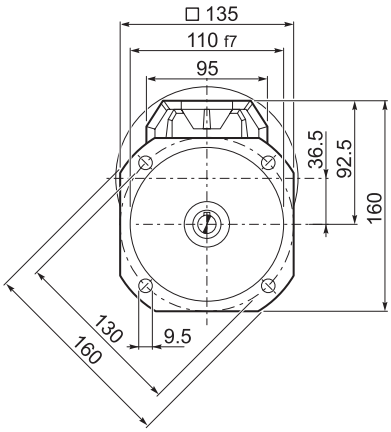

F

		M	M1	M2	N	N1	N2	N3	N4	P	X	Kg
S 10 1	**P63**	11	12.8	4	140	115	95	—	M8x10	189	4	5
S 10 1	**P71**	14	16.3	5	160	130	110	—	M8x10	189	4.5	5
S 10 1	**P80**	19	21.8	6	200	165	130	—	M10x14.5	208	4	6
S 10 1	**P90**	24	27.3	8	200	165	130	—	M10x14.5	208	4	6
S 10 1	**P100**	28	31.3	8	250	215	180	—	M12x16	218	4.5	10
S 10 1	**P112**	28	31.3	8	250	215	180	—	M12x16	218	4.5	10

S 10...HS

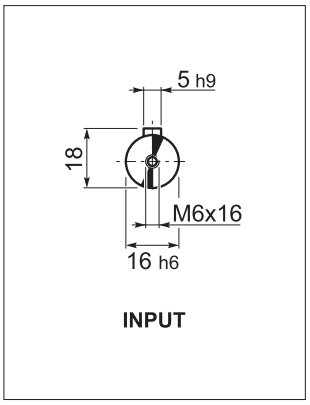

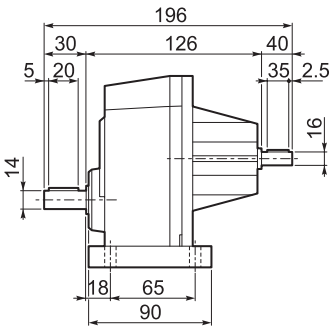

P

Kg	4.4

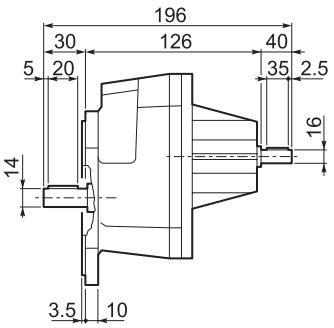

F

Kg	4.5

S 20...M/ME/MX

P

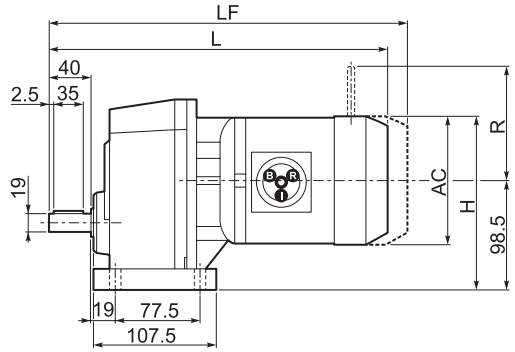

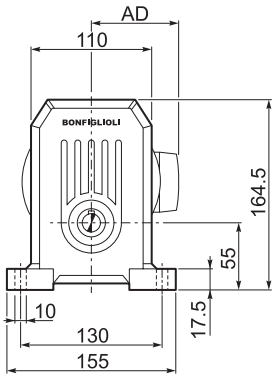

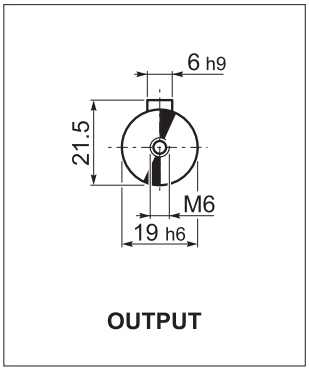

F

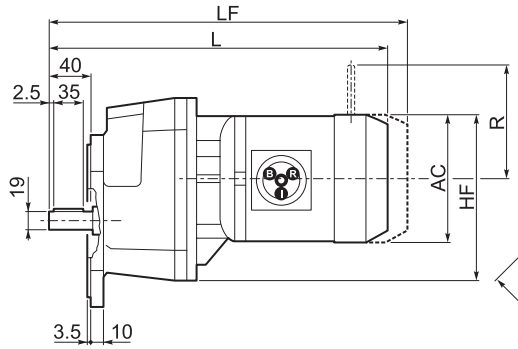

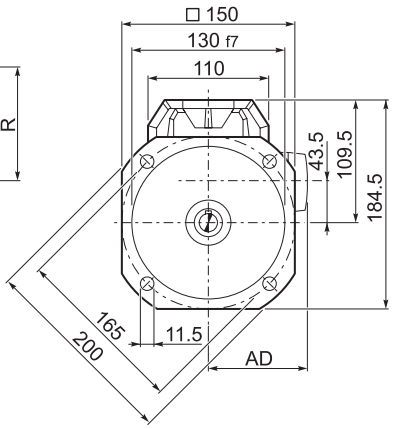

									M...FD M...FA		M...FD		M...FA	
			AC	H	HF	L	AD	Kg	LF	Kg	R	AD	R	AD
S 20 1	**S05**	**M05**	121	159	153	333.5	95	10	399.5	12	96	122	116	95
S 20 1	**S1**	**M1**	137	167	161	362.5	102	12	423.5	14	103	135	124	108
S 20 1	**S2**	**M2S**	156	176	170	385.5	111	16	461.5	19	129	146	134	119
S 20 1	**S2**	**ME2S**	156	176	170	385.5	111	16	—	—	—	—	—	—
S 20 1	**S2**	**MX2S**	156	176	170	429.5	111	21.1	—	—	—	—	—	—
S 20 1	**S3**	**ME3S**	195	196	190	434.5	135	21.5	—	—	—	—	—	—
S 20 1	**S3**	**MX3S**	195	196	190	466.5	135	24.5	—	—	—	—	—	—
S 20 1	**S3**	**ME3L**	195	196	190	466.5	135	26	—	—	—	—	—	—
S 20 1	**S3**	**MX3L**	195	196	190	510.5	135	32	—	—	—	—	—	—

S 20...P(IEC)

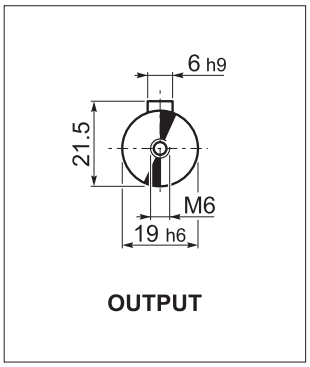

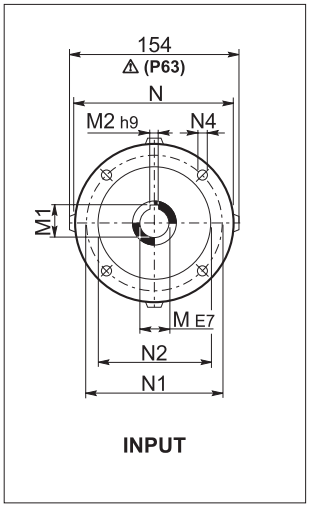

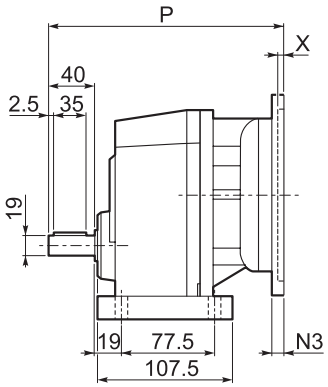

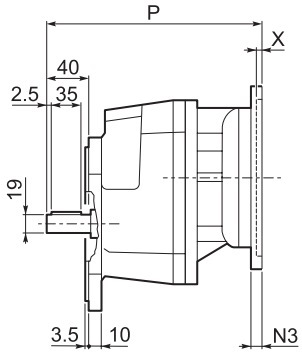

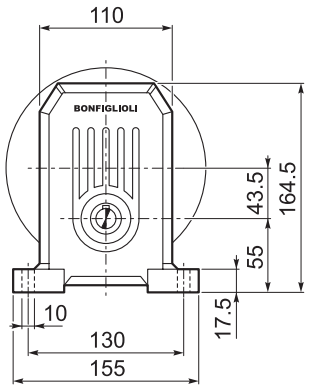

P

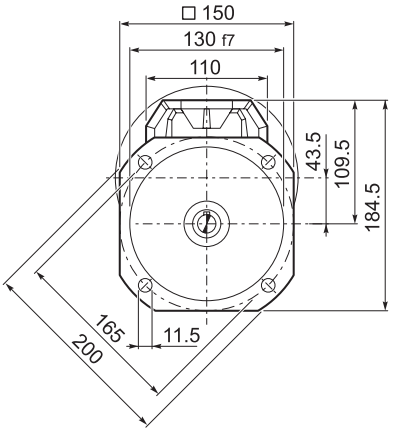

F

		M	M1	M2	N	N1	N2	N3	N4	P	X	Kg
S 20 1	**P63**	11	12.8	4	140	115	95	—	M8x10	207	4	6
S 20 1	**P71**	14	16.3	5	160	130	110	—	M8x10	207	4.5	6
S 20 1	**P80**	19	21.8	6	200	165	130	—	M10x14.5	227	4	7
S 20 1	**P90**	24	27.3	8	200	165	130	—	M10x14.5	227	4	7
S 20 1	**P100**	28	31.3	8	250	215	180	—	M12x16	237	4.5	11
S 20 1	**P112**	28	31.3	8	250	215	180	—	M12x16	237	4.5	11

S 20...HS

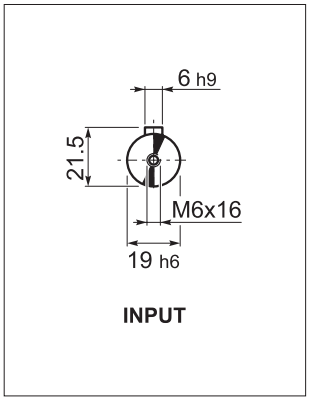

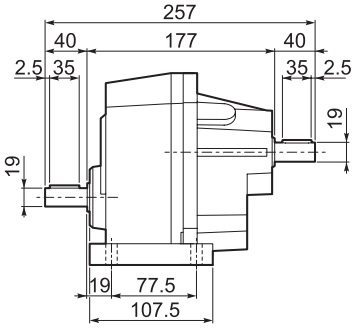

P

Kg	6.0

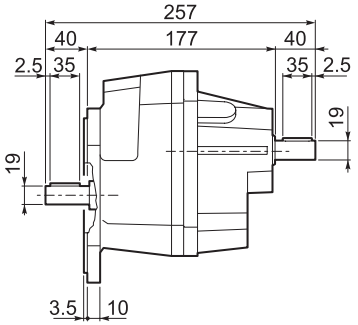

F

Kg	6.2

S 30...M/ME/MX

P

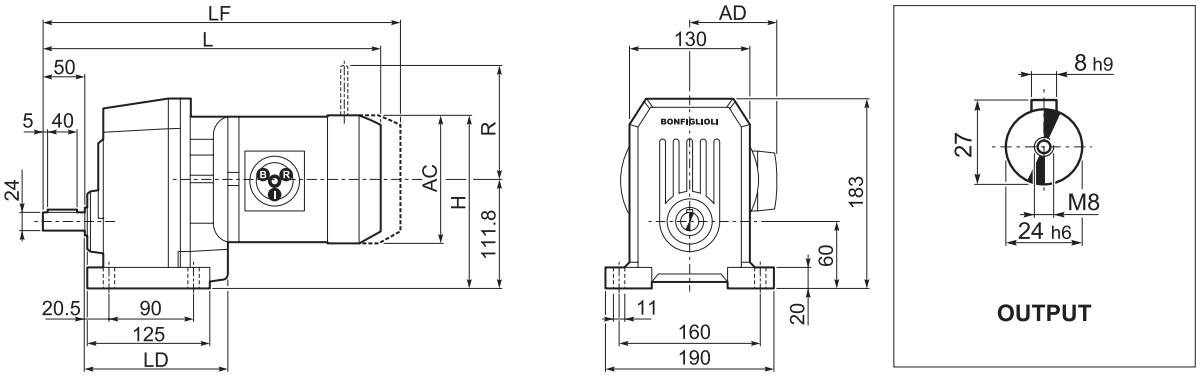

F

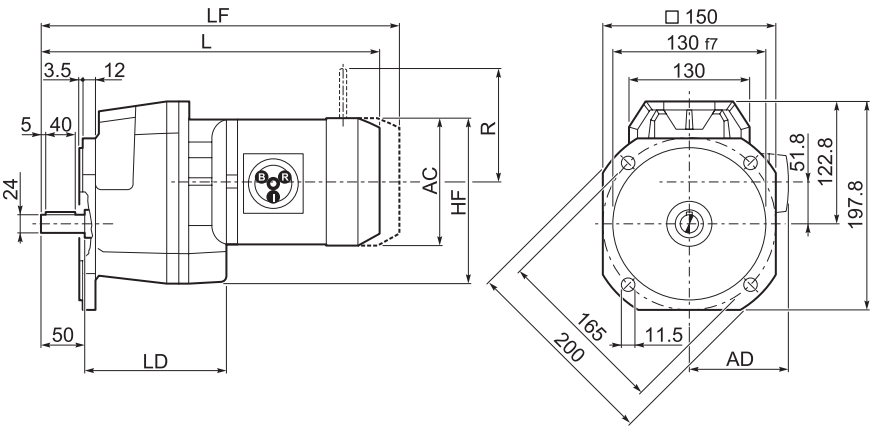

											M...FD M...FA		M...FD		M...FA	
				AC	H	HF	L	LD	AD	Kg	LF	Kg	R	AD	R	AD
S 30 1	**S1**	**M1**		137	180	177	387.5	140.5	102	14	448.5	16	103	135	124	108
S 30 1	**S1**	**M2S**		156	190	186	410.5	152.5	111	18	486.5	21	129	146	134	119
S 30 1	**S2**	**ME2S**		156	190	186	410.5	152.5	111	18	—	—	—	—	—	—
S 30 1	**S2**	**MX2S**		156	190	186	454.5	152.5	111	23.1	—	—	—	—	—	—
S 30 1	**S3**	**ME3S**		195	209	206	459.5	162.5	135	24.5	—	—	—	—	—	—
S 30 1	**S3**	**MX3S**		195	209	206	491.5	162.5	135	27.5	—	—	—	—	—	—
S 30 1	**S3**	**ME3L**		195	209	206	491.5	162.5	135	32	—	—	—	—	—	—
S 30 1	**S3**	**MX3L**		195	209	206	535.5	162.5	135	38	—	—	—	—	—	—
S 30 1	**S4**	**ME4**	**MX4**	258	240.8	237	599.5	—	193	71	—	—	—	—	—	—
S 30 1	**S4**	**ME4LB**	**MX4LA**	258	240.8	237	634.5	—	193	79	—	—	—	—	—	—

S 30...P(IEC)

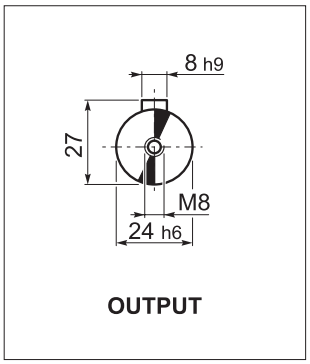

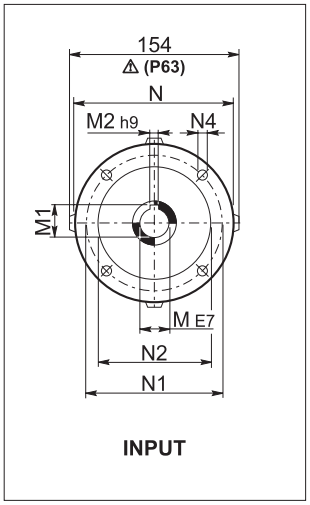

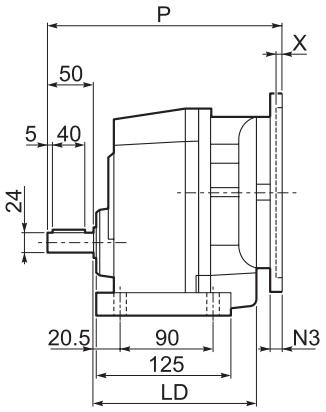

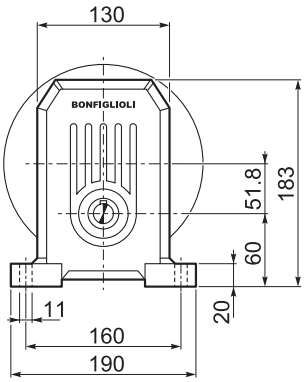

P

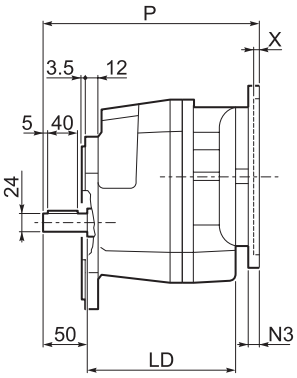

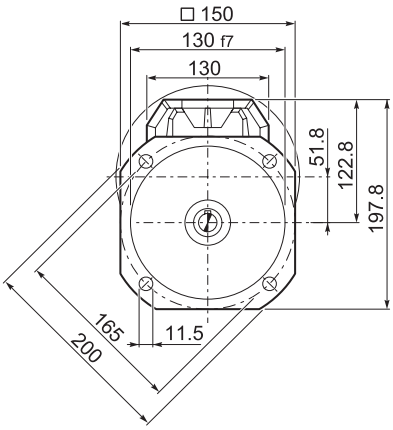

F

		LD	M	M1	M2	N	N1	N2	N3	N4	P	X	Kg
S 30 1	**P63**	152.5	11	12.8	4	140	115	95	—	M8x10	232	4	8
S 30 1	**P71**	152.5	14	16.3	5	160	130	110	—	M8x10	232	4.5	8
S 30 1	**P80**	162.5	19	21.8	6	200	165	130	—	M10x14.5	252	4	9
S 30 1	**P90**	162.5	24	27.3	8	200	165	130	—	M10x14.5	252	4	9
S 30 1	**P100**	162.5	28	31.3	8	250	215	180	—	M12x16	262	4.5	13
S 30 1	**P112**	162.5	28	31.3	8	250	215	180	—	M12x16	262	4.5	13
S 30 1	**P132**	—	38	41.3	10	300	265	230	16	14	298.5	5	21

S 30...HS

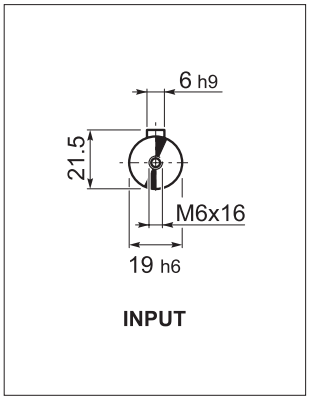

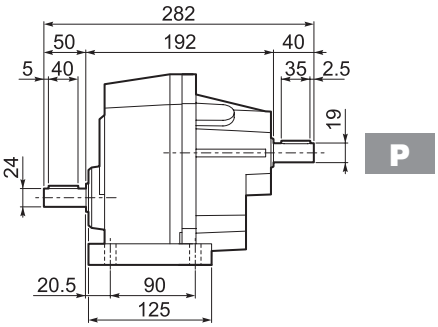

P

Kg	9.0

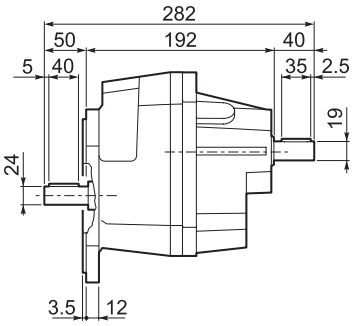

F

Kg	9.3

S 40...M/ME/MX

P

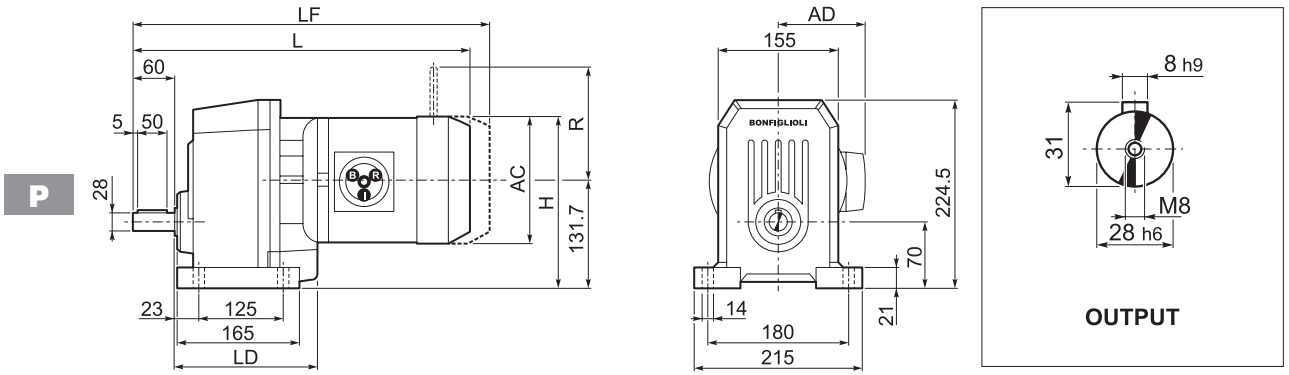

F

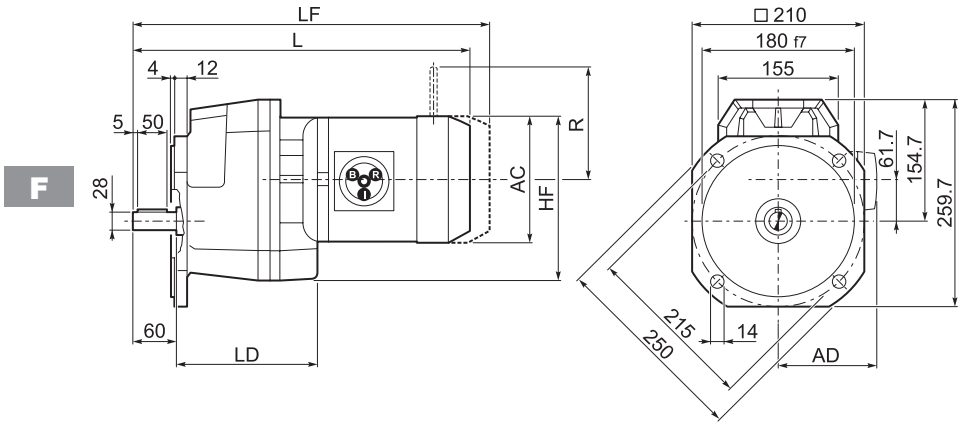

											M...FD M...FA		M...FD		M...FA	
				AC	H	HF	L	LD	AD	Kg	LF	Kg	R	AD	R	AD
S 40 1	**S1**	**M1**		137	200	197	429.5	168	102	28	490.5	31	103	135	124	108
S 40 1	**S2**	**M2S**		156	210	206	452.5	183.5	111	34	528.5	37	129	146	134	119
S 40 1	**S2**	**ME2S**		156	210	206	452.5	183.5	111	34	—	—	—	—	—	—
S 40 1	**S2**	**MX2S**		156	210	206	496.5	183.5	111	39.1	—	—	—	—	—	—
S 40 1	**S3**	**ME3S**		195	229	226	501.5	199.5	135	40.5	—	—	—	—	—	—
S 40 1	**S3**	**MX3S**		195	229	226	533.5	199.5	135	43.5	—	—	—	—	—	—
S 40 1	**S3**	**ME3L**		195	229	226	533.5	199.5	135	48	—	—	—	—	—	—
S 40 1	**S3**	**MX3L**		195	229	226	577.5	199.5	135	54	—	—	—	—	—	—
S 40 1	**S4**	**ME4**	**MX4**	258	261	257	641.5	—	193	82	—	—	—	—	—	—
S 40 1	**S4**	**ME4LB**	**MX4LA**	258	261	257	676.5	—	193	90	—	—	—	—	—	—

S 40...P(IEC)

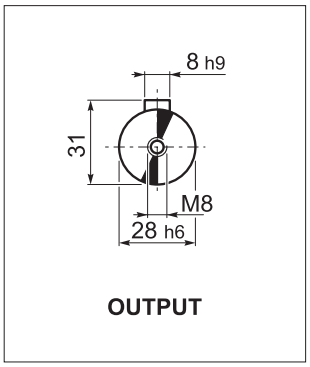

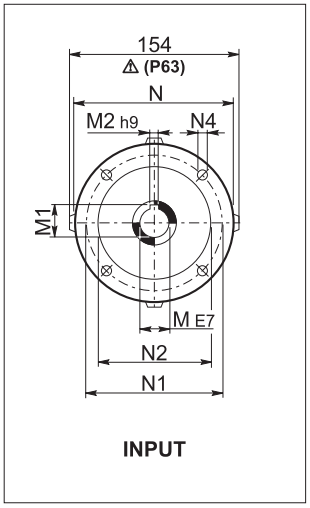

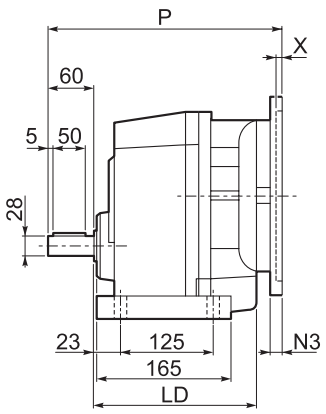

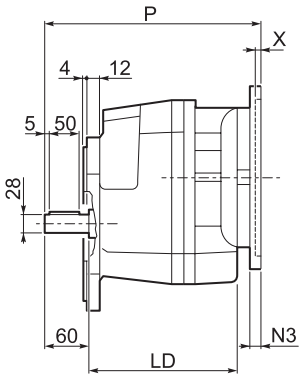

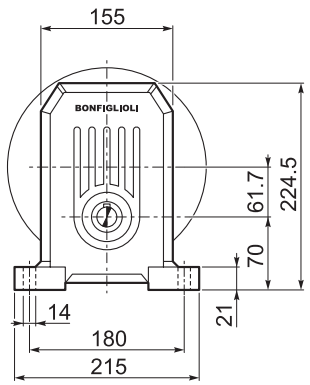

P

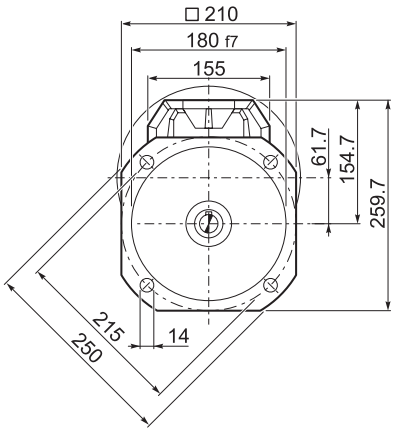

F

		LD	M	M1	M2	N	N1	N2	N3	N4	P	X	Kg
S 40 1	**P63**	183.5	11	12.8	4	140	115	95	—	M8x10	274	4	25
S 40 1	**P71**	183.5	14	16.3	5	160	130	110	—	M8x10	274	4.5	26
S 40 1	**P80**	199.5	19	21.8	6	200	165	130	—	M10x14.5	294	4	26
S 40 1	**P90**	199.5	24	27.3	8	200	165	130	—	M10x14.5	294	4	30
S 40 1	**P100**	—	28	31.3	8	250	215	180	—	M12x16	304	4.5	30
S 40 1	**P112**	—	28	31.3	8	250	215	180	—	M12x16	304	4.5	30
S 40 1	**P132**	—	38	41.3	10	300	265	230	16	14	340	5	32

S 40...HS

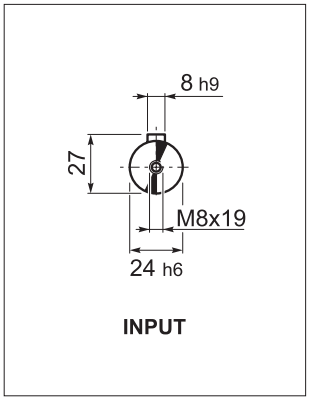

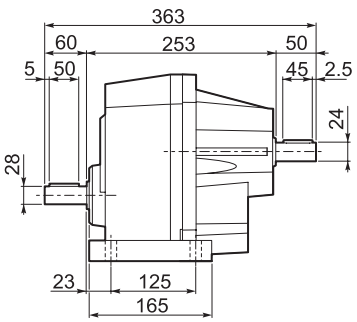

P

Kg	26.0

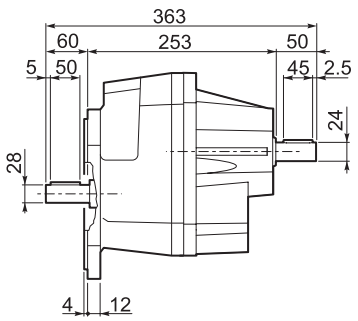

F

Kg	27.7

S 50...M/ME/MX

P

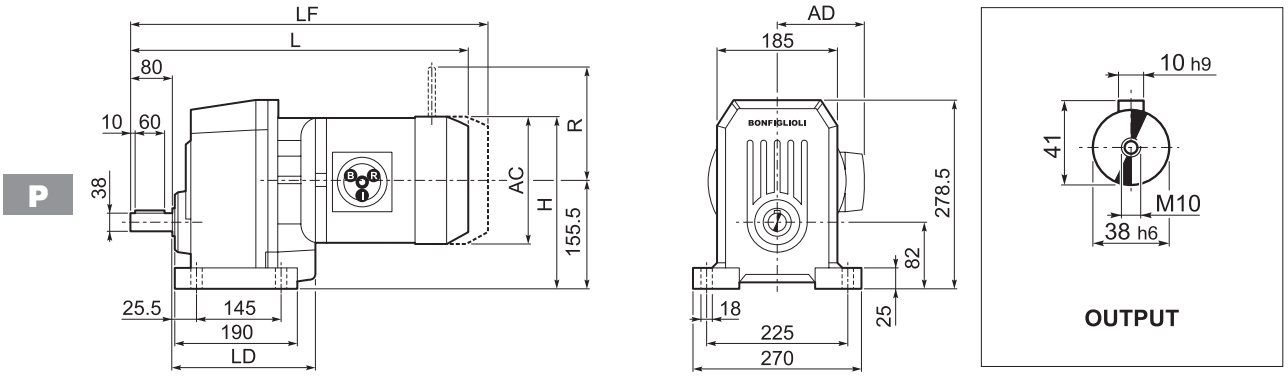

F

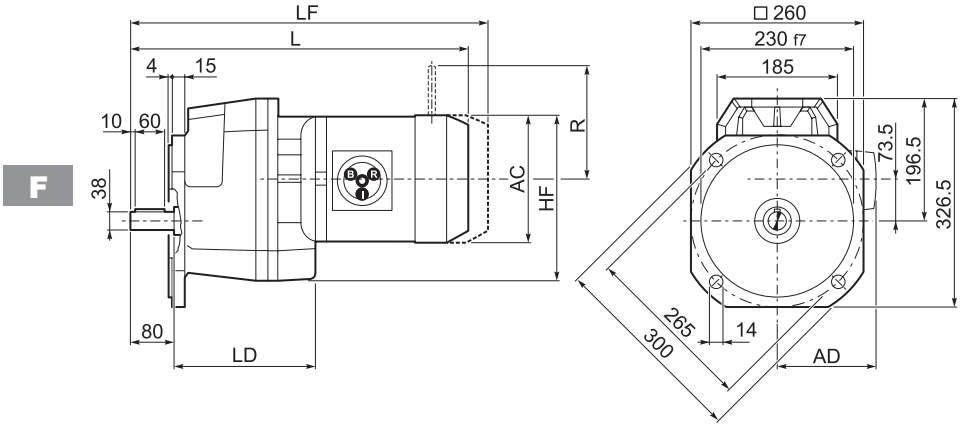

				AC	H	HF	L	LD	AD	Kg	M...FD M...FA LF	Kg	M...FD R	M...FD AD	M...FA R	M...FA AD
S 50 1	**S1**	**M1**		137	225	222	469	—	102	40	530	42	103	135	124	108
S 50 1	**S2**	**M2S**		156	233	230	492.5	204.5	111	44	568.5	47	129	146	134	119
S 50 1	**S2**	**ME2S**		156	233	230	492.5	204.5	111	44	—	—	—	—	—	—
S 50 1	**S2**	**MX2S**		156	233	230	536.5	204.5	111	49.1	—	—	—	—	—	—
S 50 1	**S3**	**ME3S**		195	253	250	541.5	219.5	135	52.5	—	—	—	—	—	—
S 50 1	**S3**	**MX3S**		195	253	250	573.5	219.5	135	55.5	—	—	—	—	—	—
S 50 1	**S3**	**ME3L**		195	253	250	573.5	219.5	135	60	—	—	—	—	—	—
S 50 1	**S3**	**MX3L**		195	253	250	617.5	219.5	135	66	—	—	—	—	—	—
S 50 1	**S4**	**ME4**	**MX4**	258	284	281	681.5	204.5	193	86	—	—	—	—	—	—
S 50 1	**S4**	**ME4LB**	**MX4LA**	258	284	281	716.5	204.5	193	94	—	—	—	—	—	—
S 50 1	**S5**	**ME5S**	**MX5S**	310	310.5	307	768	—	245	114	—	—	—	—	—	—
S 50 1	**S5**	**ME5L**	**MX5L**	310	310.5	307	812	—	245	130	—	—	—	—	—	—

S 50...P(IEC)

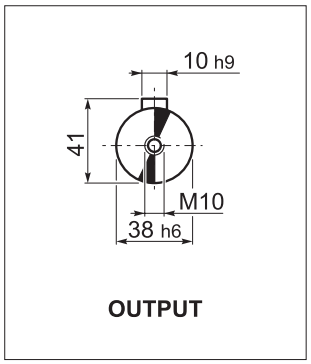

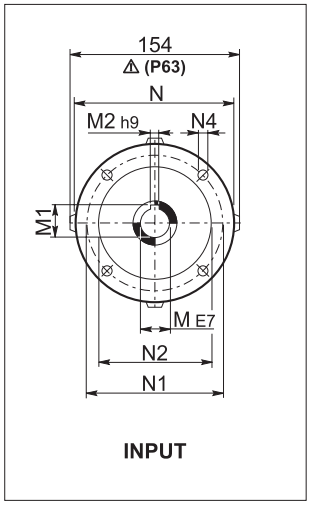

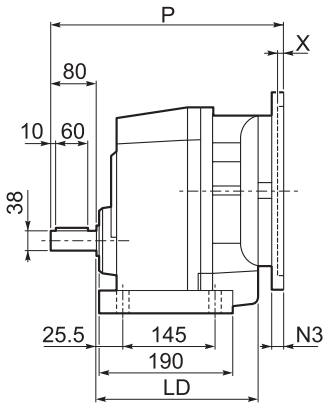

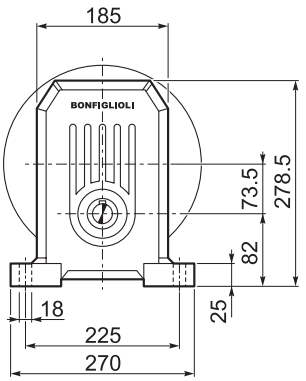

P

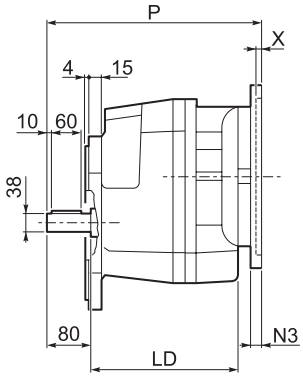

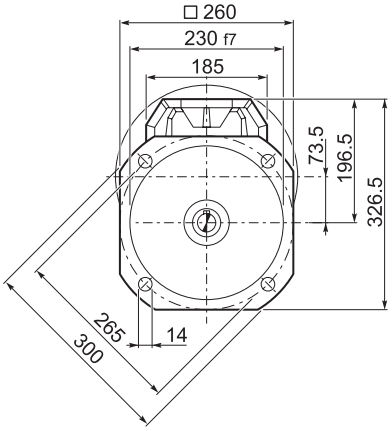

F

		LD	M	M1	M2	N	N1	N2	N3	N4	P	X	Kg
S 50 1	**P63**	204.5	11	12.8	4	140	115	95	—	M8x10	314	4	35
S 50 1	**P71**	204.5	14	12.8	4	160	130	110	—	M8x10	314	4.5	35
S 50 1	**P80**	219.5	19	16.3	5	200	165	130	—	M10x14.5	314	4	37
S 50 1	**P90**	219.5	24	21.8	6	200	165	130	—	M10x14.5	334	4	37
S 50 1	**P100**	204.5	28	27.3	8	250	215	180	—	M12x16	344	4.5	41
S 50 1	**P112**	204.5	28	31.3	8	250	215	180	—	M12x16	344	4.5	41
S 50 1	**P132**	204.5	38	41.3	10	300	265	230	16	14	380	5	44
S 50 1	**P160**	—	42	45.3	12	350	300	250	23	18	431	5.5	48
S 50 1	**P180**	—	48	51.8	14	350	300	250	23	18	431	5.5	48

S 50...HS

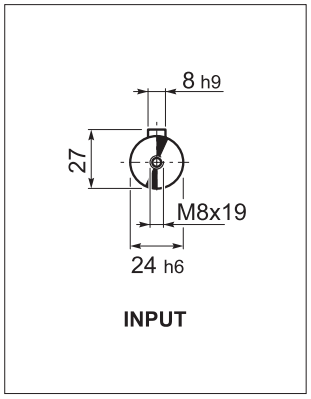

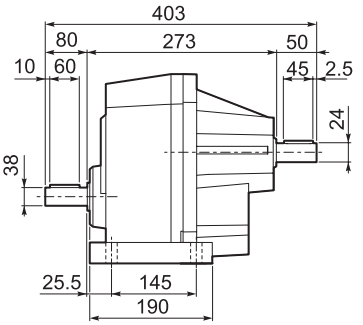

P

Kg	36

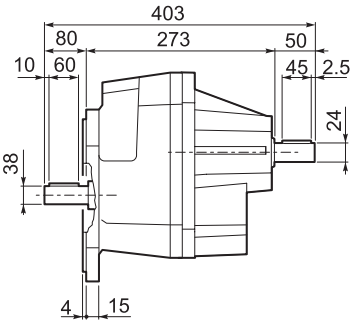

F

Kg	39

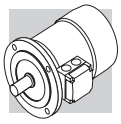

电机

M1 符号和计量单位

符号	单位	说明
cosφ	–	功率因素
η	–	效率
f_m	–	功率调整系数
I	–	循环持续率
I_N	[A]	额定电流
I_S	[A]	堵转电流
J_C	[Kgm²]	负载转动惯量
J_M	[Kgm²]	转动惯量
K_c	–	转矩系数
K_d	–	负载系数
K_J	–	惯性系数
M_A	[Nm]	平均击穿转矩
M_B	[Nm]	制动力矩
M_N	[Nm]	额定转矩
M_L	[Nm]	加速时代反向转矩
M_S	[Nm]	启动转矩

符号	单位	说明
n	[min^{-1}]	额定转速
P_B	[W]	20° C时的制动损耗功率
P_n	[kW]	电机额定功率
P_r	[kW]	所需功率
t_1	[ms]	半波整流器的制动响应时间
t_{1s}	[ms]	电子整流器的制动响应时间
t_2	[ms]	交流断电的制动响应时间
t_{2c}	[ms]	直流和交流断电的制动响应时间
t_a	[°C]	环境温度
t_f	[min]	恒定负载运行时间
t_r	[min]	停机时间
W	[J]	运行时制动的功耗
W_{max}	[J]	每次制动的最大制动
Z	[1/h]	带载许用的启频率
Z_0	[1/h]	空载许用的启动频率(I = 50%)

能效等级和测试方法

能效等级是表示电机将电能转化为机械能的效率特性。在欧洲，低电压电机的能效曾使用自主的Eff1/Eff2/Eff3系统进行分类。欧洲以外，其他国家则使用其自己国家的标准系统，往往是不同于欧洲标准系统的。这种标准的不确定性促使生产厂商合作开发统一的国际标准，并促成IEC (国际电工委员会)标准 IEC 60034-30-1, “单速、三相、鼠笼异步电机能效等级 (IE 代码)”。

这个新标准:
- 定义了新的能效分类
- **IE1** (标准效率)
- **IE2** (高效率)
- **IE3** (超高效率)
- 为电机的分类提供一个通用的国际参考系统
- 为国家建立标准提供参考
- 推出符合新标准 IEC 60034-1-2:2007 的效率测量方法

下表显示了主要类别的对应关系。

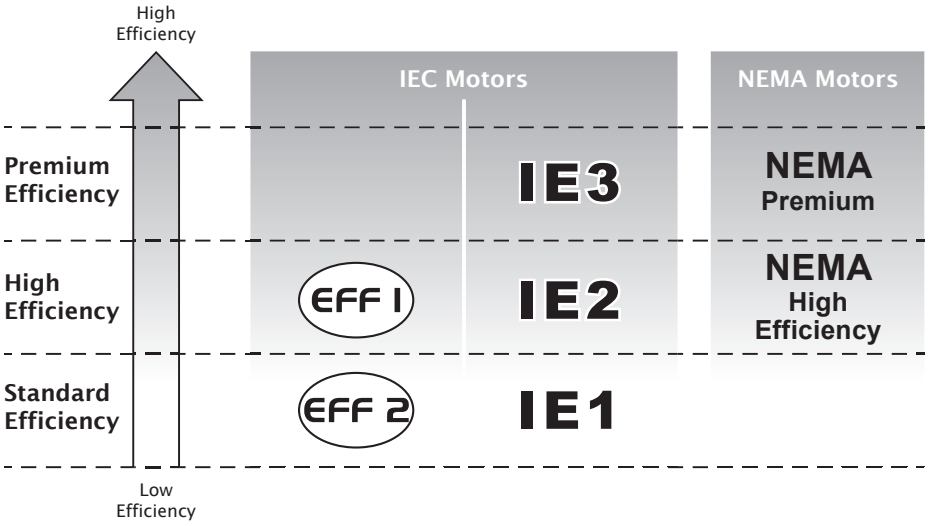

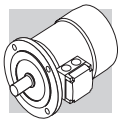

欧盟委员会条例 640/2009

IEC 标准 60034-30-1 提供了能效分级的技术指导，但并没有强制要求任何法律对能效等级进行特定的分级。这些是由欧盟指令和国家法律规定的。

欧共体条例于2009年7月22日通过规范 2005/32/EC 。 这提供了电机设计的法律依据和生态兼容设计标准，并规定了按以下时间表所需遵循的最低效率限制：

- **16/06/2011:** 电机最低能效水平相当于 **IE2**
- **01/01/2015**: 额定功率在 7.5 kW 到 375 kW 之间的电机最低能效等级相当于 **IE3**, 或者在变频去驱动下相当于 **IE2**
- **01/01/2017:** 额定功率在 0.75 kW 到 375 kW之间的电机最低能效等级相当于 **IE3**, 或者在变频去驱动下相当于 **IE2**

适用范围和例外

欧共体条例 640/2009 适用于额定电压从0.75kW到375kW、额定电压上至1000V、连续S1工作制的2，4和6极，单速，三相，50 Hz 或 60 Hz，笼式感应电机。

以下不适用于该条例:

- 制动电机
- 适用于浸在液体中工作的电机
- 被集成在一个产品（例如减速电机、泵、风扇）中的电机
- 为一个产品中电机，单独测试其性能
- 明确为以下条件设计的电机：
  - 工作海拔高度高于4000米；
  - 环境温度高于 60 ° C；
  - 最大的操作温度高于400 ° C；
  - 环境温度低于 -30 ° C (所有电机) 或者低于 0 ° C (水冷却电机)；
  - 温度低于 0 ° C 或高于 32 ° C，带有液体冷却剂；
  - 规范 2014/34/EU 中所定义的潜在爆炸环境

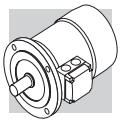

M3 一般特性

M3.1 产品范围

邦飞利生产的三相异步电动机有BX，BE，BN，MX，ME和M系列产品，除了IMB5两种基本结构形式外，还有其他衍生的结构形式，电机极数。
为了适用于工业环境，电机带外风扇和鼠笼式转子，采用封闭式结构。
BX-BE/MX-ME系列标准电机的额定电压为 230/400V Δ/Y（基座号BX-BE 160和BX- BE 180额定电压为400/690V Δ/Y），50 Hz，公差范围 ±10%。BN/M系列标准电机的额定电压为230/400V Δ/Y（基座号范围BN 160到BN 200的额定电压为400/690V Δ/Y），50 Hz，公差范围 ±10%。

M3.2 标准

本手册中所述的电机按照下表中的可用标准进行生产。

(F01)

名称	CEI	IEC
电机工作的基本要求	**CEI EN 60034-1**	**IEC 60034-1**
电机接线及和旋转方向	**CEI 2-8**	**IEC 60034-8**
电机的冷却方法	**CEI EN 60034-6**	**IEC 60034-6**
电机尺寸及额定输出值	**EN 50347**	**IEC 60072**
电机保护罩防护等级	**CEI EN 60034-5**	**IEC 60034-5**
噪音限值	**CEI EN 60034-9**	**IEC 60034-9**
电机结构分类及安装位置	**CEI EN 60034-7**	**IEC 60034-7**
低压总线额定电压	**CEI 8-6**	**IEC 60038**
电机振动等级	**CEI EN 60034-14**	**IEC 60034-14**
单速度，三相，鼠笼式异步电机（IE代码）的效率等级	**CEI EN 60034-30-1**	**IEC 60034-30-1**
测定试验中损失和效率的标准方法	**CEI EN 60034-2-1**	**IEC 60034-2-1**

邦飞利生产的电机同时符合以下国家对应的 IEC 60034-1 标准。

(F02)

DIN VDE 0530	德国
BS5000 / BS4999	英国
AS 1359	澳大利亚
NBNC 51 - 101	比利时
NEK - IEC 34	挪威
NF C 51	法国
OEVE M 10	奥地利
SEV 3009	瑞士
NEN 3173	荷兰
SS 426 01 01	瑞典

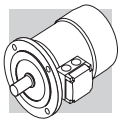

M3.3 规范 2006/95/EC (LVD) 和 2004/108/EC (EMC)

BX，BE，BN，MX，ME和M系列电机符合2006/95/EC（抵押规范）和2004/108/EC（电磁兼容性规范），铭牌上刻有CE标识。
对于EMC规范，电机结构符合CEI EN 60034-1，EN 61000-6-2，EN 61000-6-4。
如果在整流器输入端装有合适的电容过滤器（CF选项）后，FD制动电机将符合EN 61000-6-3:2007标准“电磁兼容性 -电磁辐射标准- 6-3章节 住宅、商务和轻工业环境”。
电机也符合CEI EN 60204-1标准的“电气设备”部分。
电机生产厂家或将电机作为部件安装到其他产品的组装厂，对电机安全以及规范符合性最终负责。

M3.4 第2012/19/EU号欧盟指令——废弃处置

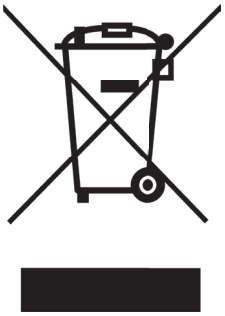

本产品不得与普通生活垃圾混合。应当按照根据国家规定而制定的第2012/19/EU号欧盟指令进行处置。
同时遵循该国所实施的其他相应法律进行处置。

M3.5 公差

根据标准CEI EN 60034-1，此处公差取以下可用数值。

(F03)

-0.15 (1 - η) P ≤ 50kW	效率
-(1 - cosφ)/6 min 0.02 max 0.07	功率因素
±20% *	滑差
+20%	堵转电流
-15% +25%	堵转力矩
-10%	最大力矩

* ± 30%适用于Pn < 1 kW的电机

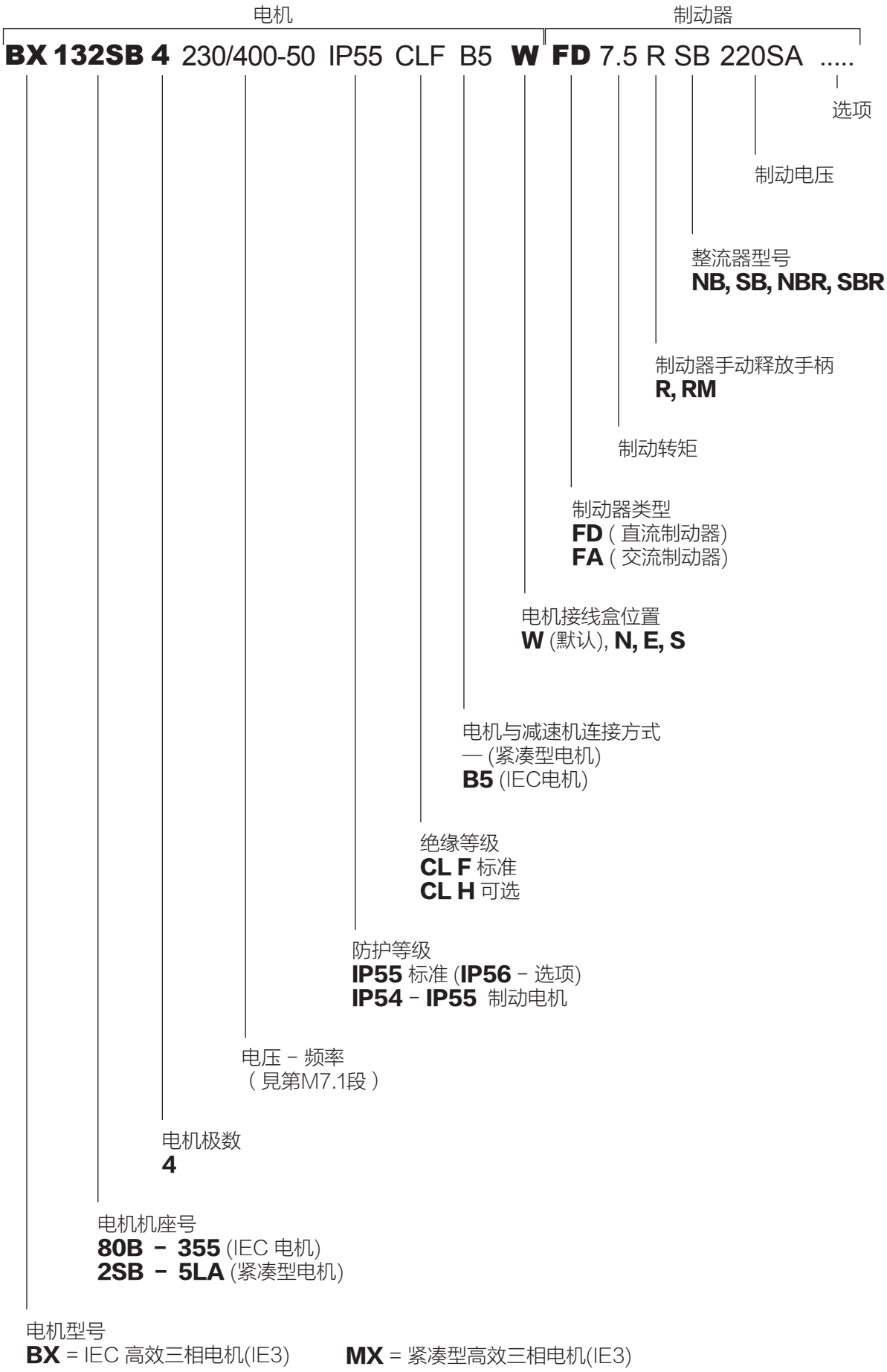
电机
制动器
BX 132SB 4 230/400-50 IP55 CLF B5 W FD 7.5 R SB 220SA .....
选项
制动电压
整流器型号
NB, SB, NBR, SBR
制动器手动释放手柄
R, RM
制动转矩
制动器类型
FD (直流制动器)
FA (交流制动器)
电机接线盒位置
W (默认), N, E, S
电机与减速机连接方式
— (紧凑型电机)
B5 (IEC电机)
绝缘等级
CL F 标准
CL H 可选
防护等级
IP55 标准 (IP56 – 选项)
IP54 – IP55 制动电机
电压 – 频率
(見第M7.1段)
电机极数
4
电机机座号
80B – 355 (IEC 电机)
2SB – 5LA (紧凑型电机)
电机型号
BX = IEC 高效三相电机(IE3)
MX = 紧凑型高效三相电机(IE3)

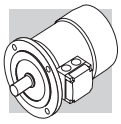

电机

BE **90LA** **4** 230/400-50 IP55 CLF B5 **W** .....

选项

电机接线盒位置
W (默认), **N, E, S**

电机与减速机连接方式
— (紧凑型电机)
B5 (IEC电机)

绝缘等级
CL F 标准
CL H 可选

防护等级
IP55 标准 (**IP56** – 选项)

电压 – 频率
（見第M7.1段）

电机极数
2, 4, 6

电机机座号
71B – 180L (IEC 电机)
2SA – 5LA (紧凑型电机)

电机型号
BE = IEC 高效三相电机(IE2)　**ME** = 紧凑型高效三相电机(IE2)

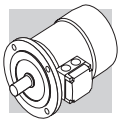

电机 制动器

BN 90LA 4 230/400-50 IP55 CLF B5 **W** **FD** 7.5 R SB 220SA .....

选项

制动电压

整流器型号
NB, SB, NBR, SBR

制动器手动释放手柄
R, RM

制动转矩

制动器类型
FD (直流制动器)
FA (交流制动器)

电机接线盒位置
W (默认), **N, E, S**

电机与减速机连接方式
— (紧凑型电机)
B5 (IEC电机)

绝缘等级
CL F 标准
CL H 可选

防护等级
IP55 标准 (**IP56** – 选项)
IP54 – **IP55** 制动电机

电压 – 频率
(見第M7.1段)

电机极数
2, 4, 6, 2/4, 2/6, 2/8, 2/12, 4/6, 4/8

电机机座号
56A – 200LA (IEC 电机)
0B – 5SB (紧凑型电机)

电机型号
BN = IEC 三相电机 **M** = 紧凑型三相电机

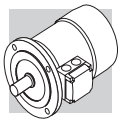

M5 基本选项 – 可选选项

M5.1 基本选项

(F04)

描述		默认	选项	页数
电压 (BN - BE - BX) ≤ 132		230/400/50		506
电压 (BN - BE - BX) ≥ 160		400/690/50		
防护等级	BX - BE - BN - MX - ME - M	IP 55	IP 56	503
	BX_FD - BX_FA - BN_FD - BN_FA MX_FD - MX_FA - M_FD - M_FA	IP 54	IP 55	
	BX_FD ≥ 200	IP 55		
	BX...K - BX... K_FDK	IP 55	IP 56	
绝缘等级		CLF	CLH	512
设计版本	BX - BE - BN	**B5** **B5 R**		502

默认值

M5.2 可选选项

(F05)

描述	样本编号								可用性	页数
热保护装置	**D3**	**K1**	**E3**						BX - BE - BN MX - ME - M	529
标准50赫兹电源	**PN**								BN M	508
反馈装置	**EN1**	**EN2**	**EN3**	**EN4**	**EN5**	**EN6**	**EN7**	**EN8***	BX - BE - BN MX - ME - M	537 538
防冷凝加热器	**H1**	**NH1**							BX - BE - BN MX - ME - M	532
耐热的绕组	**TP**								BX - BE - BN MX - ME - M	533
双加长轴	**PS**								BX - BE - BN MX - ME - M	533
转子平衡等级B	**RV**								BX - BE - BN MX - ME - M	534
外部机械保护	**RC**	**TC**							BX - BE - BN MX - ME - M	537
强制风冷	**U1**	**U2****							BX - BE - BN MX - ME - M	535 536
Insulated Bearings	**IB***								BX MX	539
认证	**CUS**								BX - BE - BN MX - ME - M	509
印度认证	**BIS**								BE ME	510
中国强制性认证	**CCC**								BX - BE - BN MX - ME - M	511
中国认证（中国能效标识）	**CEL**								BX MX	511
巴西认证	**NBR**								BX MX	512
澳大利亚认证	**EECA**								BX MX	512
插头连接器	**CON**								BX - BE - BN MX - ME - M	529
表面保护	**C_**								BX - BE - BN MX - ME - M	540
油漆	**RAL**								BX - BE - BN MX - ME - M	540
证书	**ACM**								BX - BE - BN MX - ME - M	541
检验合格证	**CC**								BX - BE - BN MX - ME - M	541
垂直安装	**VM***								BX MX	539
逆止器	**AL**	**AR**							MX - ME - M	534
工作制类型	**S2**	**S3**	**S9**						BN M	513 514

* 仅适用于 BX ⩾ 200和BX ⩾ 200K电机。 ** 仅适用于BN和M型电机

M5.3 制动器相关选项

(F06)

描述	样本编号				可用性	页数
制动力矩	请参见具体的制动类型					521 524
手动释放杆	**R**	**RM**			BX - BN MX - M	526
手动释放杆位置	**AB**	**AA**	**AC**	**AD**	BX - BN MX - M	527
直流制动整流器	**NB**	**NBR**	**SB**	**SBR**	BX - BN MX - M	520
软启动飞轮	**F1**				BN M	528
电容滤波器	**CF**				BX - BN MX - M	528
制动器单独供电(*)	**...SA**	**...SD**			BX - BN MX - M	527
制动功能检查	**MSW**				BX - BN MX - M	532
附加电缆进去制动电机	**IC**				BX - BN MX - M	532

(*) 指定电压　　默认值

M5.4 铭牌举例

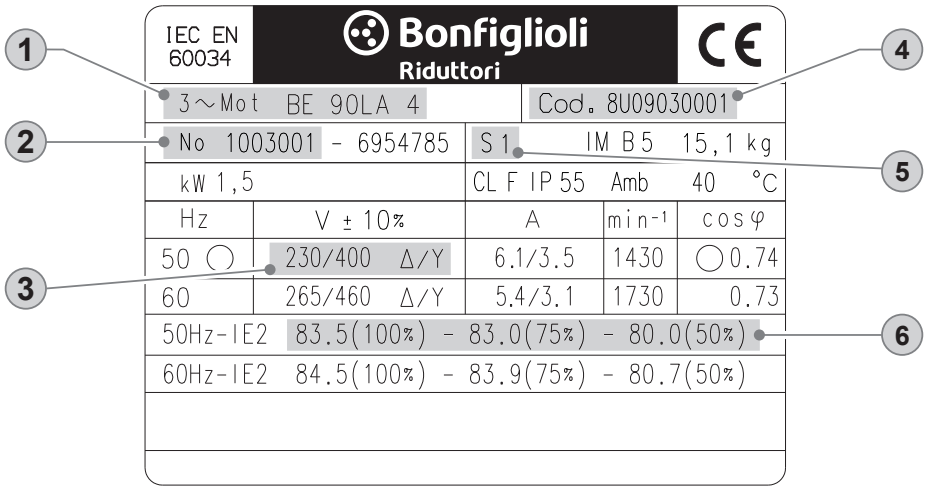

① 邦飞利电机类型
② 序列号
③ 额定电压
④ 电机代码
⑤ 工作制类型
: S1连续工作制
⑥ IE 能效等级t:
4/4 – 3/4 – 2/4 负载

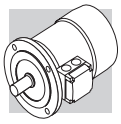

M6 机械特性

M6.1 结构形式

欧共体标准的BX，BE和BN系列电机可用结构形式在下面表格中列出，这些结构形式同时符合EN 60034-7 (BX/BE)，CEI EN 60034-14 (BN)标准。

安装形式为：

IM B5（基本形式）
IM V1, IM V3（衍生形式）

IM B5结构的电机可按IM V1和IM V3两种形式安装；在上述几种情况下，电机铭牌均标为IM B5两种基本形式。
如果电机结构形式是输出轴垂直朝下安装，一般建议安装防雨防尘罩（制动电机必须安装）。订购电机式，该装置应列在选购件清单上，因为其不包含在电机标准出厂配置中。

(F07)

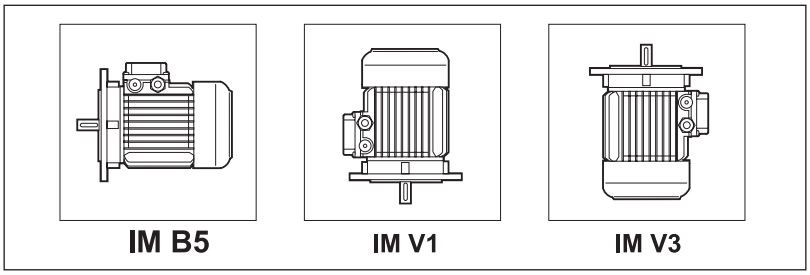

对于BX≥200以及BX≥200K型电机来说，垂直安装时必须选用VM选项。

如果安装该电机时DE朝下，则建议选用RC选项。在订购时必须说明这一点，因为其不属于标准电机版本。

如下表所示，法兰安装的电机可使用其他较小的安装尺寸。按**B5R**执行。这种法兰的使用同样必须遵循与减速机组合的电机的最大功率的限制（参考“电机与减速机的组合范围”章节）。如果不能满足该条件请联系邦飞利技术部。

(F08)

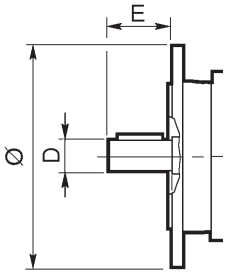

	BN/BE 71	BX/BE/BN 80	BX/BE/BN 90	BX/BE/BN 100	BX/BE/BN 112	BX/BE/BN 132
	DxE - Ø					
B5R(1)	11x23 - 140	14x30 - 160	19x40 - 200	24x50 - 200	24x50 - 200	28x60 - 250

(1) 法兰通过光孔安装

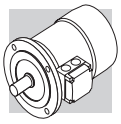

M6.2 防护等级

IP..

下表详细说明了可用的防护等级。除了在订单中特别指定的防护等级外，户外安装的电机必须防止太阳直射，另外，当电机输出轴垂直朝下安装时，须安装防雨防尘罩，防止雨水或固体颗粒进入（**RC** 选项）。

(F09)

		IP 54	IP 55	IP 56
BX - BE - BN	**MX - ME - M**	⛔	标准	 按要求提供
BX ≤ 180_FD **BX_FA** **BN_FD** **BN_FA**	**MX_FD** **MX_FA** **M_FD** **M_FA**	标准	 按要求提供	⛔
BX ≥ 200_FD **BX ≥ 200K_FD**		⛔	标准	⛔
BX ≥ 280K_FD		⛔	标准	 按要求提供

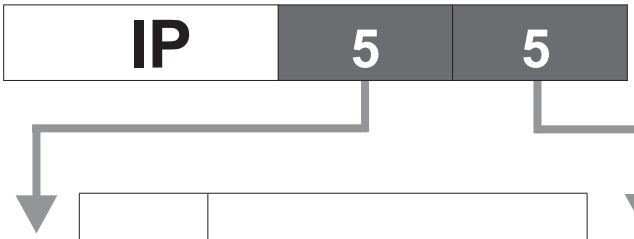

0		没有防护
1		防止直径大于等于 50 mm的固体物体侵入
2		防止直径大于等于 12.5 mm的固体物体侵入
3		防止直径大于等于 2.5 mm的固体物体侵入
4		防止直径大于等于 1.0 mm的固体物体侵入
5		防尘
6		无灰尘进入

0		没有防护
1		防止垂直滴水
2		倾斜15° 时仍可防止滴水侵入
3	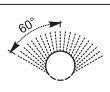	防雨淋
4		防止飞溅的水侵入
5		防止喷射的水侵入
6	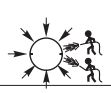	防止强烈喷射水的侵入
7		防止临时浸水时水的侵入
8	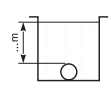	防止沉没时水的侵入

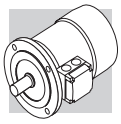

M6.3 冷却

电机采用外部冷却（CEI EN 60034-6定义的IC 411），装有双向旋转的塑料风扇。
安装电机时，应保证风扇罩后端和面对的墙壁之间留有足够的空间，从而保证通风顺畅，并方便电机和制动器（如有）的检修。
按要求可提供单独供电的强制冷却风扇（IC 416），即选项**U1**。
在电机有变频控制且低速运转的情况下，强制冷却方式可提高电机的负载系数。

M6.4 旋转方向

电机可以双向旋转。如果接线端U1、V1和W1分别连接至电源相线L1、L2和L3，电机顺时针旋转（从输出轴端看）。如果对换两根电源相线，电机将逆时针旋转。

M6.5 噪声

按照ISO 1680标准测量，电机噪声在CEI EN 60034-9标准最高级别的规定范围内。

M6.6 振动和平衡

电机装有半键的转子轴的动平衡在CEI EN 60034-14标准的N级范围内。

M6.7 接线盒

电机接线板上有6个接线柱（“双电压”美版，为9个接线柱）。
提供设备接地用的接线柱。
下表说明了电机的型号和接线柱数量。
关于制动电压，请阅读如下章节：8（FD制动器），9（FA制动器）。
制动电机的接线盒内装有交流/直流整流器（出厂前已接线）。
接线盒内或用户手册上有接线方法说明。

(F10)

		接线柱数量	接线柱螺纹
BX 80, BX 90 **BE 80, BE 90** **BN 56 ... BN 90**	**MX2, MX3** **ME2** **M05 ... M2**	6	M4
BX 100 ... BX 132 **BE 100 ... BE 132** **BN 100 ... BN 160MR**	**MX3, MX4** **ME3, ME4** **M3 ... M4**	6	M5
BX 160 - BE 160 ... BE 180M **BN 160M ... BN 180M**	**ME5** **MX5 - M5**	6	M6
BX 180 - BE 180L **BN 180L ... BN 200L**	**–** **–**	6	M8
BX 200 ... BX 250 **BX 200K ... BX 250K**	**–** **–**	6	M10
BX 280 ... BX 355 **BX 280K ... BX 355K**	**–** **–**	6	M12
BX 80 ... BX 132 **BE 80 ... BE 132** **BN 63 ... BN 160MR**	**MX2 ... MX4** **ME2 ... ME4** **M05 ... M4**	9	M4
BX 160 ... BX 180 **BE 160 ... BE 180** **BN 160M ... BN 200L**	**MX5** **ME5** **M5**	9	M6

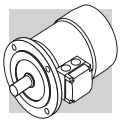

M6.8 电缆进线口

根据EN 50262标准，接线盒上的电缆接线口采用公制螺纹，详细尺寸请参看下表。

(F11)

		电缆进线口		允许最大电缆直径 [mm]
BN 63	**M05**	2 x M20 x 1.5	每侧一个孔	13
BN 71 - BE 71	**M1**	2 x M25 x 1.5		17
BX 80, BX 90 - BE 80, BE 90 **BN 80, BN 90**	**MX2, MX3 - ME2** **M2**	2 x M25 x 1.5		17
BX 100, BX 112 - BE 100, BE 112 **BN 100**	**MX3, MX4 - ME3** **M3**	2 x M32 x 1.5	每侧两个孔	21
		2 x M25 x 1.5		17
BN 112	**–**	2 x M32 x 1.5		21
		2 x M25 x 1.5		17
BX 132 - BE 132 **BN 132 ... BN 160MR**	**MX4 - ME4** **M4**	4 x M32 x 1.5		21
BX 160 - BE 160, BX 180 - BE 180 **BN 160M ... BN 200L**	**MX5 - ME5** **M5**	2 x M40 x 1.5	旋转, 4 x 90°	28
BX 200 ... BX 355 **BX 200K ... BX 355K**	**–**	2 x M63 x 1.5	旋转, 4 x 90°	45

M6.9 轴承

电机采用终身润滑的预负载径向球轴承，轴承规格请参看下表。
按照ISO 281标准计算，轴承在无载荷情况下的的使用寿命L_{10h}超过40000小时。
DE = 驱动端 **NDE** = 非驱动端

(F12)

	**DE**	**NDE**	
	MX, ME, M	**M**	**M_FD, M_FA**
M05	6004 2Z C3	6201 2Z C3	6201 2RS C3
M1	6004 2Z C3	6202 2Z C3	6202 2RS C3
MX2 - ME2 - M2	6007 2Z C3	6204 2Z C3	6204 2RS C3
MX3 - ME3 - M3	6207 2Z C3	6206 2Z C3	6206 2RS C3
MX4 - ME4 - M4	6309 2Z C3	6308 2Z C3	6308 2RS C3
MX5 - ME5 - M5	6309 2Z C3	6309 2Z C3	6309 2RS C3

	**DE**	**NDE**	
	BX, BE, BN	**BX, BE, BN**	**BN_FD** **BN_FA**
BN 56	6201 2Z C3	6201 2Z C3	–
BN 63	6201 2Z C3	6201 2Z C3	6201 2RS C3
BN 71 - BE 71	6202 2Z C3	6202 2Z C3	6202 2RS C3
BX 80 - BE 80 **BN 80**	6204 2Z C3	6204 2Z C3	6204 2RS C3
BX 90 - BE 90 **BN 90**	6205 2Z C3	6205 2Z C3	6305 2RS C3
BX 100 - BE 100 **BN 100**	6206 2Z C3	6206 2Z C3	6206 2RS C3
BX 112 - BE 112 **BN 112**	6306 2Z C3	6306 2Z C3	6306 2RS C3
BX 132 - BE 132 **BN 132**	6308 2Z C3	6308 2Z C3	6308 2RS C3
BN 160MR	6309 2Z C3	6308 2Z C3	6308 2RS C3
BX 160M/L **BE 160M/L** **BN 160M/L**	6309 2Z C3	6309 2Z C3	6309 2RS C3
BN 180M	6310 2Z C3	6309 2Z C3	6309 2RS C3
BX 180M/L **BE 180M/L** **BN 180L**	6310 2Z C3	6310 2Z C3	6310 2RS C3

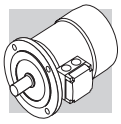

(F13)

	DE	NDE	
	BX, BE, BN	BX, BE, BN	BN_FD BN_FA
BN 200L **BX 200** **BX 200K**	6312 2Z C3 6312/C3	6310 2Z C3 6210/C3*	6310 2RS C3
BX 225 **BX 225K**	6313/C3*	6212/C3*	-
BX 250 **BX 250K**	6315/C3*	6213/C3*	-
BX 280 **BX 280K**	6316/C3*	6316/C3*	-
BX 315 **BX 315K**	6319/C3**	6316/C3**	-
BX 355 **BX 355K**	6322/C3**	6316/C3**	-

*注意：带有M6x1润滑装置的可重复润滑轴承
*注意：带有M10x1润滑装置的可重复润滑轴承

M7 电气特性

M7.1 电压

单速电机的标准额定电压为230 / 400 V Δ/Y，50 Hz，或 400 / 690 V Δ/Y，50 Hz，额定电压允许 ± 10%的公差，也可以按需求提供下表中列出的电压等级。
说明：电机的标称电压/频率同时还取决于与特定市场能效认证有关的选项选用情况。下表仅作指导，如需获取与所选认证相关可用电压/频率的更多信息，请参阅第M7.5 – M7.10段。
下表中没有罗列出来的BN和M系列电机，电压/频率配置的公差范围为 ± 5%。
超出公差范围的操作会导致电机温度超过绝缘等级规定的额定温度10K。
电机适用于符合IEC 60038要求的欧洲电网与电压。

(F14)

效率等级			V_{mot} ± 10 % 3 ~	配置
IE3	**BX 80 ... BX 132**	**MX2 ... MX4**	230 / 400 V - Δ/Y - 50 Hz	标准
	BX 160 ... BX 355	**MX 5**	400 / 690 V - Δ/Y - 50 Hz	标准
	BX 200LAK ... BX 355MCK	**MX 5**	460 / 800 V - Δ/Y - 60 Hz	标准
IE2	**BE 71 … 132**	**ME2 … ME4**	230 / 400 V - Δ/Y - 50 Hz	标准
			460 V Y - 60 Hz[1]	标准
			400 / 690 V - Δ/Y - 50 Hz	按要求，无需额外费用
	BE 160, BE 180	**ME5**	400 / 690 V - Δ/Y - 50 Hz	标准
			460 V Δ - 60 Hz[1]	标准
IE1	**BN 56 ... BN 132**	**M0 … M4**	230 / 400 V - Δ/Y - 50 Hz	标准
			400 / 690 V - Δ/Y - 50 Hz	按要求，无需额外费用
			460 V Y - 60 Hz	标准
	BN 160 ... BN 200	**M5**	400 / 690 V - Δ/Y - 50 Hz	标准
			460 V Δ - 60 Hz	标准

[1] 4 极电机专用

所有在50Hz频率工作下双速电机的额定电压都为400V。
适用的公差请参照CEI EN 60034-1。

下表中列出了可供选择的接线方式。

(F15)

极数		绕组连接
2	**BE 80 ... BE 160, BN 63 ... BN 200**	Δ / Y (²)
4	**BX 80 ... BX 355** **BX 200LAK ... BX 355MCK** **BE 80 ... BE 180, BN 56 ... BN 200**	
6	**BE 90 ... BE 160, BN 63 ... BN 200**	
8	**BN 71 ... BN 132**	
2/4	**BN 63 ... BN 132**	Δ / YY (Dahlander)
2/6	**BN 71 ... BN 132**	Y / Y (双绕组)
2/8	**BN 71 ... BN 132**	
2/12	**BN 80 ... BN 132**	
4/6	**BN 71 ... BN 132**	
4/8	**BN 80 ... BN 132**	Δ / YY (Dahlander)

(²)在电机电压比是2(例如：230/460 - 60) 将配备
一个9针端子箱连接Δ Δ/ Δ 或YY / Y 绕组 (除6级BN 63 Δ / Y)

M7.2 频率

下图说明BN / M系列电机在60 Hz情况下的额定输出功率。

(F16)

		P_n [kW]			
		2P	**4P**	**6P**	**8P (*)**
BN 56A	**–**	–	0.07	–	–
BN 56B	**M0B**	–	0.1	–	–
BN 63A	**M05A**	0.21	0.14	0.1	–
BN 63B	**M05B**	0.3	0.21	0.14	–
BN 63C	**M05C**	0.45	0.3	–	–
BN 71A	**–**	0.45	0.3	0.21	0.1
–	**M1SC**	–	–	0.21	–
BN 71B	**M05SD**	0.65	0.45	0.3	0.14
BN 71C	**M1LA**	0.9	0.65	0.45	–
BN 80A	**–**	0.9	0.65	0.45	0.21
BN 80B	**M2SA**	1.3	0.9	0.65	0.30
BN 80C	**M2SB**	1.8	1.3	0.9	–
BN 90S		–	1.3	0.9	0.45
BN 90SA	**–**	1.8	–	–	–
BN 90SB		2.2	–	–	–
BN 90L	**M3SA**	2.5	–	1.3	0.65
BN 90LA		–	1.8	–	–
BN 90LB	**–**	–	2.2	–	–

		P_n [kW]			
		2P	**4P**	**6P**	**8P (*)**
BN 100L	**M3LA**	3.5	–	–	–
BN 100LA		–	2.5	1.8	0.9
BN 100LB	**M3LB**	4.7	3.5	2.2	1.3
BN 112M	**–**	4.7	4.7	2.5	1.8
–	**M3LC**	–	4.7	2.5	–
BN 132S	**M4SA**	–	6.5	3.5	2.5
BN 132SA		6.5	–	–	–
BN 132SB	**M4SB**	8.7	–	–	–
BN 132M	**M4LA**	11	–	–	3.5
BN 132MA		–	8.7	4.6	–
BN 132MB	**M4LB**	–	11	6.5	–
BN 160MR	**M4LC**	12.5	12.5	–	–
BN 160M	**M5SA**	–	–	8.6	–
BN 160MB	**–**	17.5	–	–	–
–	**M5SB**	17.5	17.5	–	–
BN 160L	**–**	21.5	17.5	12.6	–
–	**M5SC**	21.5	–	–	–
BN 180M	**M5LA**	24.5	21.5	–	–
BN 180L	**–**	–	25.3	17.5	–
BN 200L	**–**	–	34	–	–
BN 200LA	**–**	34	–	22	–

(*)M_的电机不可配此选项

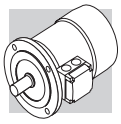

BX / BE / MX / ME系列电机，仅4极电机可以在60 Hz情况下工作，此时额定功率值与50 Hz情况下相同。
当供电电源频率为60 Hz时，BN / M系列双速（变极变速）电机的额定输出功率比其在50 Hz的电源下的额定输出功率提高15%。此时BX / BE / MX / ME系列双速电机不能使用。
如果电机用于60 Hz的供电电源中，而客户要求铭牌上的功率值仍按50Hz时的额定值表示，则请在电机的命名中注明PN选项。
为50 Hz供电电源设计的电机，通常是可以在60 Hz的电网中工作，但其主要参数应按下表做出更新。
指定用于50赫兹操作的电机同时会在铭牌上给出适用于60赫兹操作的相关数值（除了进行CUS操作的电机以及制动电机之外）。请参阅以下表格。

(F17)

	50 Hz	**60 Hz**			
	V - 50 Hz	**V** - 60 Hz	**Pn** - 60 Hz	**M_n**, **M_a/M_n** - 60 Hz	**n** [min^{-1}] - 60 Hz
BX/MX BE/ME	**230/400 Δ/Y**	265 - 460 Δ Y	1	0.83	1.2
	400/690 Δ/Y	460 Δ			
BN/M	**230/400 Δ/Y**	220 - 240 Δ			
		380 - 415 Y			
	400/690 Δ/Y	380 - 415 Δ			
BN/M	**230/400 Δ/Y**	265 - 280 Δ	1.15	1	1.2
		440 - 480 Y			
	400/690 Δ/Y	440 - 480 Δ			

M7.3 环境温度

样本中的额定值是基于供电电源为50 Hz，以及环境条件符合CEI EN 60034-1标准规定（温度为40 °C，海拔高度≤ 1000 m）的计算值。
电机可以在40 - 60 °C的温度中工作，但其额定功率应根据下表中的系数做出调整。

(F18)

环境温度(° C)	40°	45°	50°	55°	60°
调整系数	100%	95%	90%	85%	80%

如果减额系数大于15%，请与邦飞利联系。

M7.4 50 HZ 额定功率

PN

使用此选项，那么即使电机在60 Hz下使用，电机铭牌上的额定功率依然为50 Hz下的额定功率。对于电压230/460V 和 575V、频率为60 Hz的情况下，PN为默认选项。

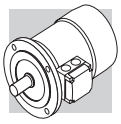

M7.5 美国和加拿大标准的电机

CUS

CUS选项可用于针对BN、BE、M、ME型电机进行的NEMA C型设计，以及针对BX型电机进行的NEMA B型设计，此时会考虑到各种电气特征。电机均已按照CSA（加拿大标准）C22.2 N° 100和UL（保险商实验室）UL 1004-1标准通过认证，如UL文件E308649中所述。
BN、BE、M、ME型电机铭牌给出以下标志：



BX≤180型电机铭牌给出以下标志并且按照美国和加拿大现行的能效标准进行认证，这些标准分别由DOE（美国能源部，美国联邦法规10 CFR 431）和NRCan（加拿大自然资源能效委员会，能效法规）提供，并且按照CSA C390标准进行测试。



BX 100电机仅适用于美国，并不适用于加拿大，而且铭牌上给出的相关标志具体如下：



BX≥200K型电机在铭牌上给出了以下标示并且遵循美国和加拿大的能效法规，这些法规分别由DOE（美国能源部，美国联邦法规10 CFR 431）和NRCan（加拿大自然资源能效委员会，能效法规）提供，并且按照CSA C390标准进行测试。



说明：
自**2016年6月1日**开始，除非以下一种或者多种情况适用，否则美国和加拿大境内不得销售效率低于IE3标准的CUS型电机（即“超高效率”）：

- 双速电机；
- 适用于非连续占空（<80%）的电镀电机；
- 电机需要只通过变频驱动进行操作（适当配有“仅限变频占空”标签，或者类似标签）。

CUS选项仅针对BX≥200K才能配合选用U1或者U2。
以下表格中针对该电机需要指定的美国电源电压以及相应的额定电压：

(F19)

频率	电源电压	V_{mot}
60 Hz	208 V	**200 V**
	240 V	**230 V**
	480 V	**460 V**
	600 V	**575 V**

采用CUS选项的BX型电机可采用以下标称电压/频率组合：

(F20)

	V_{mot}
BX ≤ 132	265/460 - 60 Hz
BX ≤ 180	230/460 - 60 Hz 330/575 - 60 Hz
BX ≥ 160 BX ≥ 200K	460/800 - 60 Hz

CUS选项同时适用于50赫兹的工作电机（不包括BX、MX电机）。

作为标配，电压比为2的电机（例如：230/460-60；220/440-60）的特点是采用了一个9柱接线板。针对相同的操作以及575V-60Hz的电源，其标称额定值与相应的50赫兹额定值相符。
对于直流FD型制动电机来说，其整流器与电机接线盒内的单相230V交流供电电压相连接。
适用于制动电机的制动电源如下所述：

(F21)

BX_FD - BN_FD **MX_FD - M_FD**
连接到接线盒 1~230V c.a.

BX_FA - BN_FA **MX_FA - M_FA**		电源
独立电源	230V Δ	230SA
独立电源	460V Y	460SA

M7.6 印度认证

BIS

在印度制造或进口的≥0.37kW低压电机必须通过印度标准局认证，并提供符合IS 12615标准的电机符合性标志。
功率范围从0.37到3.7千瓦（含）的BE型电机可获得上述认证，而且当选用BIS选项时，会配备给出以下标识的铭牌：

具有BIS选项的BE型电机可采用以下标称电压/频率组合：

(F22)

	V_{mot}
71 ≤ BE ≤112	230/400 - 50 Hz

M7.7 中国强制认证

CCC

在中华人民共和国境内销售的电机必须通过CCC（中国强制认证）体系的认真。额定扭矩不大于7Nm的 BN电机，都具有CCC认证并在电机铭牌上标注以下特殊标记：

IE3 电机目前还不能指定CCC选项。
带强冷风扇的电机目前还不能指定CCC选项。

M7.8 中国认证（中国能效标识）

CEL

在中国制造或进口的≥0.75kW的低压电机必须获得中国能效标识办公室的认证和注册，并提供能源标签，证明其符合GB18613-2012中规定的能效等级。
功率范围从30到355千瓦（含）的BX型电机可获得上述认证，而且当选用CEL选项时，该电机会附加以下标签：

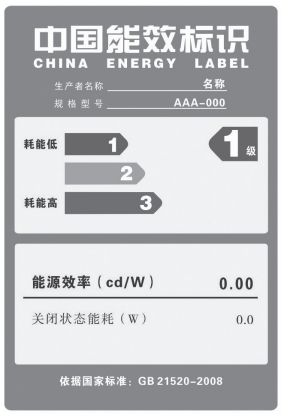

采用CEL选项的BX型电机可采用以下标称电压/频率组合：

(F23)

	V_{mot}
BX ≥ 200	380/660 - 50 Hz

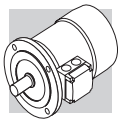

M7.9 巴西认证

NBR

巴西法律对本国所制造和进口的电机做出规定。这些电机必须通过在INMETRO（巴西国家计量、标准化与工业质量协会）进行电机能效等级声明的方式获得NBR（巴西国家标准）认证。符合NBR标准规定的电机必须报告标称能效值，而且必须提供特定的NBR铭牌以及下图中所示的其他标志：
NBR选项适用于功率范围从30到355千瓦（含）的BX ... K型电机



采用NBR选项的BX型电机可采用以下标称电压/频率组合：

(F24)

	V_{mot}
BX ≥ 200K	440/760 - 60 Hz

M7.10 澳大利亚认证

EECA

“澳大利亚/新西兰能源法规所涵盖的电机必须列入国家数据库Energyratig。采用EECA选项的电机会在上述数据库中进行注册并且可以向澳大利亚和新西兰销售。
EECA选项适用于功率范围从30到355千瓦（含）的BX ... K型电机”。

采用EECA选项的BX型电机可采用以下标称电压/频率组合：

(F25)

	V_{mot}
BX ≥ 200K	400/690 - 50 Hz

M7.11 绝缘等级

CL F

邦飞利的标准电机采用F级绝缘材料（漆包线、绝缘子、浸渍树脂）。
对于标准电机，定子绕组的温升极限与绝缘等级B的温升极限一致，都是80K。
如果绝缘材料选用得当，电机可以适应热带气候和振动的应用场合。
如果使用场合含有腐蚀性很强的化学物或者湿度很高，请向邦飞利工程师咨询，以便正确选型。

CL H

如果客户要求，我们可提供绝缘等级为H级的电机。
符合CSA（加拿大标准协会）和UL（保险商实验室）标准（CUS选项）的电机可以选择这一选项，仅限于BX≥200和BX≥200K型电机。

(F27)

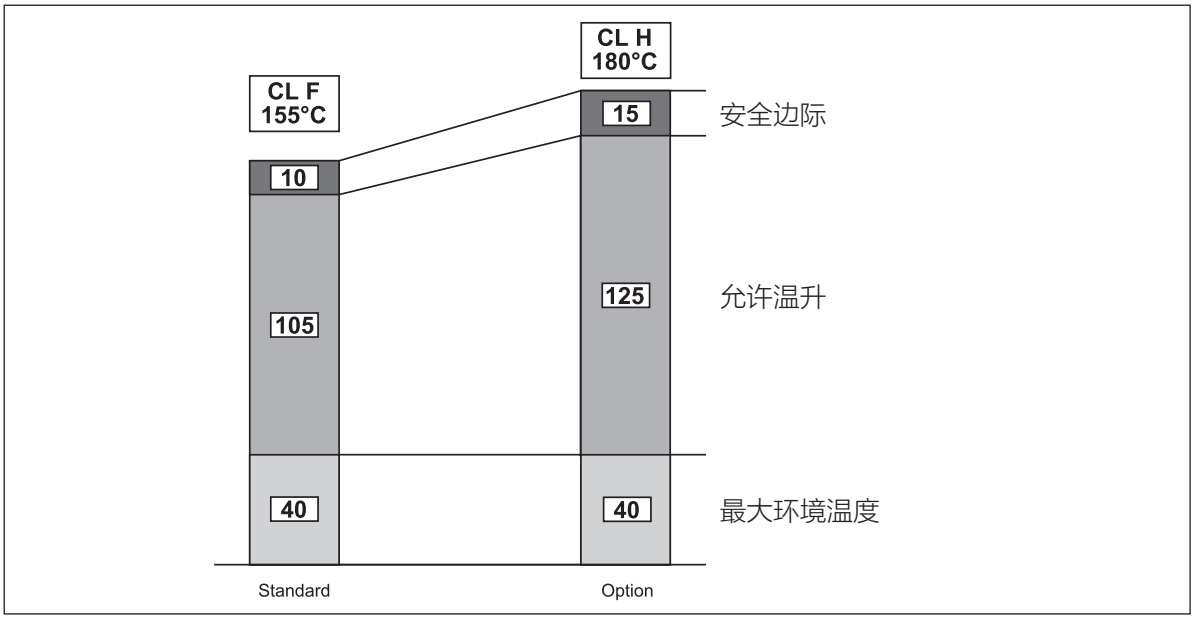

M7.12 工作制类型

除非另有说明，样本中的电机功率都是指按连续工作之S1时的数值。
对于非S1工作制下工作的电机，必须根据CEI EN 60034-1标准来对其工作制进行识别。
对于工作制为S2和S3的电机，电机的功率可由下表中列出的系数进行调整。请注意，下表只适用于单极单速电机。
除S1连续工作制外，S2，S3或S9工作制对应的调整系数都可以从下表中获得。电机铭牌上的额定功率会按不同的工作制而标注对应的值，并标注出特定的电气参数和不同的工作制类型（例如S2-30 min，S3-70%或S9）。
更加详细的信息，请咨询邦飞利的技术服务部门。
对于变极变速电机不同工作制情况下对应的额定功率，请咨询邦飞利工程部门。

(F26)

	工作制类型						
	S2			**S3 ***			**S4 - S9**
	持续时间 (分钟)			间歇性 (I)			联系我们
	10	**30 (*)**	**60**	**25%**	**40%**	**70% (*)**	
f_m	1.35	1.15	1.05	1.25	1.15	1.1	

*任何情况下，循环持续时间都必须小于10分钟。如过超过10分钟，请向邦飞利技术服务部门咨询。
(*) 的选项的默认值(表. F05).

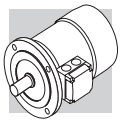

M7.12.1 循环持续率:

$$I = \frac{t_f}{t_f + t_r} \cdot 100 \qquad (01)$$

t_f = 恒定负载运行时间
t_r = 停机时间

M7.12.2 短时工作制 S2:

这一工作制的特征是一段恒定负载运行时间（比电机达到热稳定所需时间短）紧接着一段停机时间，使电机内部温度回到常温。

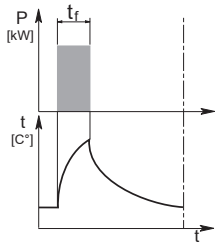

M7.12.3 断续周期工作制 S3:

这一工作制的特征是一系列相同的工作周期运行。每一个周期包括一段恒定负载运行时间和一段停机时间。
这种工作制中每一周期的启动电流不会对温升有显著影响。

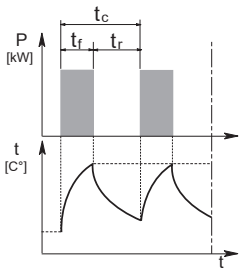

M7.13 变频控制电机

邦飞利电机可以和脉冲调宽（PWM）变频器结合使用，变频器输入电压最高可达500V。标准电机采用由隔离层、2级漆包线和H级浸渍树脂组成的相对绝缘系统（1600V 的峰-峰电压脉冲容量和电机接线端上升时间 $t_S > 0.1\,\mu s$ ）。下面表格是典型的S1工作制及基准频率 f_b = 50 Hz时电机的转矩/转速特性曲线。
在低频（30 Hz）运行时，自带风扇（IC411）的标准电机的通风性能会降低，因此需要考虑其额定转矩的降低。或者，安装单独供电的强制冷却风扇。
基准频率和变频器最大输出电压之间是电机的恒功率运行区间，转矩随着比值（f/f_b）的下降而降低。由于电机最大转矩随着$(f/f_b)^2$的比值下降，允许的过载能力也逐渐下降。

(F28)

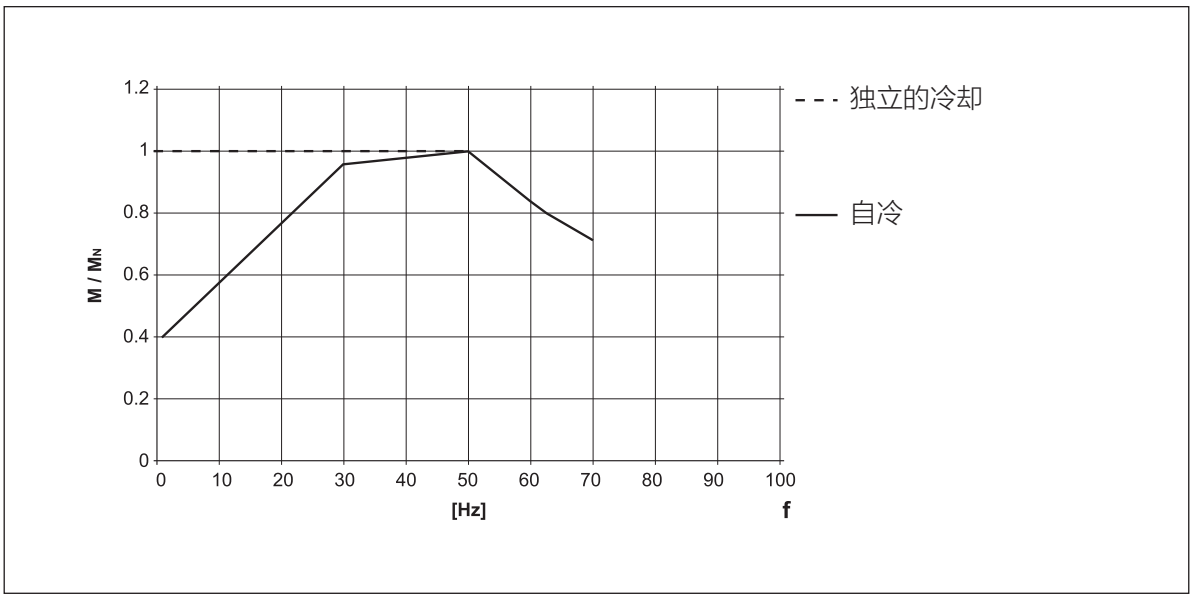

下表中列出了电机在额定频率以上运行的最高转速极限值：

(F29)

		**n** [min^{-1}]		
		2p	**4p**	**6p**
≤ BE 112 - BN 112	**ME2, ME3 M05 ... M3**	5200	4000	3000
≥ BE 132 - BN 132	**ME4, ME5 M4, M5**	4500	4000	3000
BX 80 ... BX 180	**MX2 ... MX5**		4000	

当运行转速高于额定转速时，电机会产生更大的机械振动和风扇噪声。在这种情况下，我们竭力推荐选用R级转自动平衡。安装一个单独供电的冷却风扇也是一个有效的解决方案。

遥控风扇和制动器（如有）必须直接连接到主电源。

M7.14 每小时运行的启动次数Z

制动电机的额定值表列出了循环持续率为50%以及空载时的每小时允许的启动次数 Z_0。
样本中的数值是指不超过F级绝缘等级允许的额定温度条件下电机每小时启动次数。
举个实际的例子，对于已知负载转动惯量J_C，所需功率P_r 以及启动时平均转矩M_L 的应用场合，电机每小时启动次数的实际值可以由以下公式计算得出：

$$Z = \frac{Z_0 \cdot K_c \cdot K_d}{K_J} \qquad (02)$$

其中:

$K_J = \frac{J_m + J_c}{J_m}$	惯性因素
$K_c = \frac{M_a - M_L}{M_a}$	力矩系数
$K_d =$	负载系数，请参阅下表

(F30)

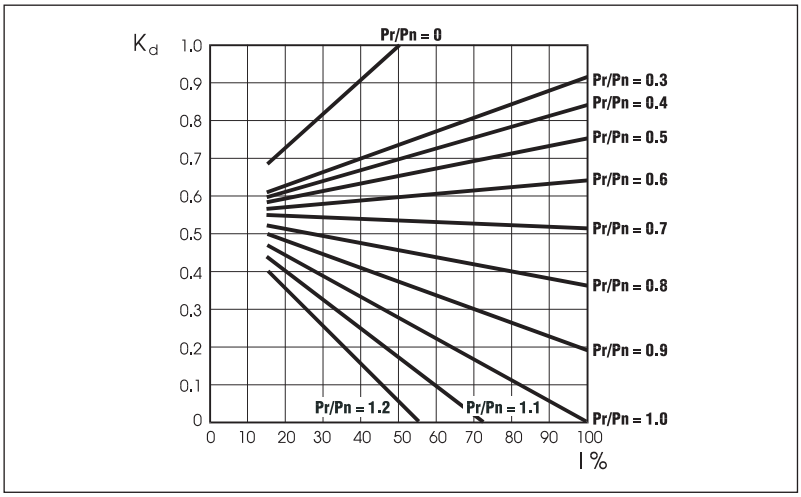

如果电机每小时启动次数的实际值在允许值（Z）范围内，最好再校核制动器的功耗是否符合热容量Wmax（表F38,F41中说明，与每小时起停次数有关）的要求。

M8 异步制动电机

M8.1 工作原理

集成制动器的电机采用弹簧作用直流控制（FD选项）或交流控制（FA选项）结构。
所有制动器的设计结构都能实现断电保护，即在断电时由弹簧制动。

(F31)

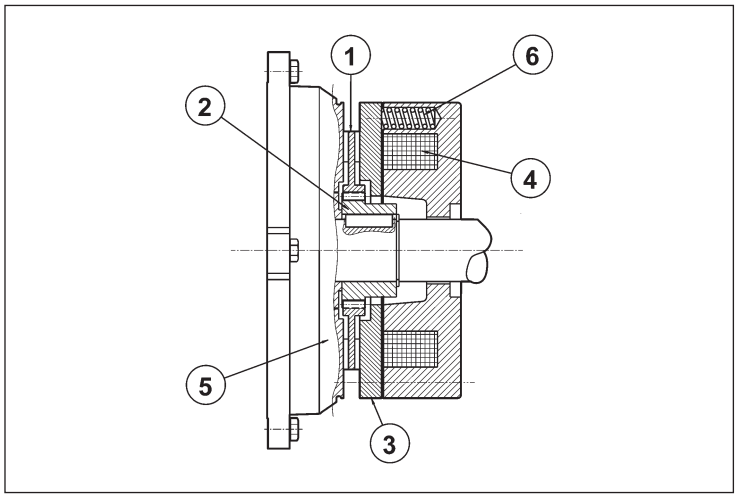

关键部件:
① 制动片
② 制动片架子
③ 压力盘
④ 制动器线圈
⑤ 电机后端盖
⑥ 制动弹簧

断电时，弹簧将压力盘推向制动片。制动片被夹紧在压力盘和电机后端盖之间，由此使电机轴停止转动。
线圈通电后，产生足够的磁力以克服弹簧作用，并将压力盘吸住，从而释放制动片。

M8.2 最显著的特性

- 制动力矩大（通常 Mb ≈ 2 Mn），制动力矩可调。
- 带双摩擦面（磨损小且不含石棉）的金属制动片。
- 电机轴的风扇端（即非驱动端）是内六角形式，可用于手动盘车（这一形式不能与PS, RC, TC, U1, U2, EN1, EN2, EN3, EN4, EN5, EN6同选）。
- 手动释放杆（FD电机的R和RM选项；FA电机的R选项）。
- 所有制动器表面经过防腐蚀处理。
- F级绝缘。

M9 BX_FD, BN_FD, MX_FD 和 M_FD型直流制动电机

基座号：BX 80 ... BX 355M, BX200LAK ⋯ BX 355MCK – BN 63 ⋯ BN 200L / MX2SB ... MX5LA – M05 ... M5
BE/ME电机可以配置FD制动器，更多信息请联系邦飞利技术部。

(F32)

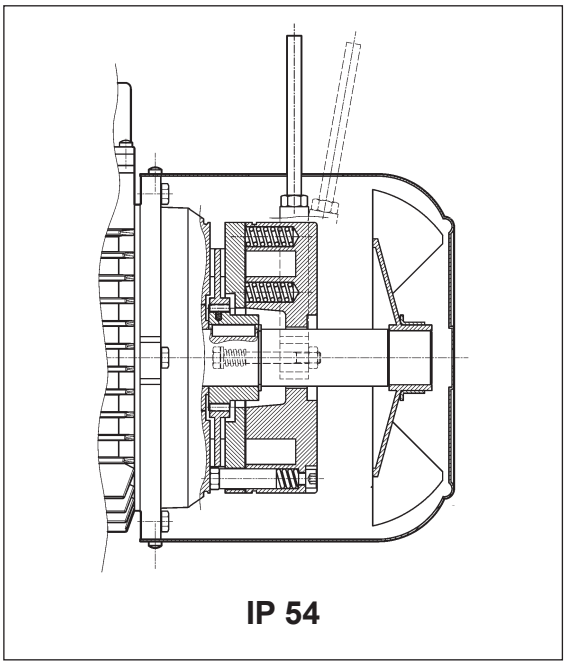

IP 54

(F33)

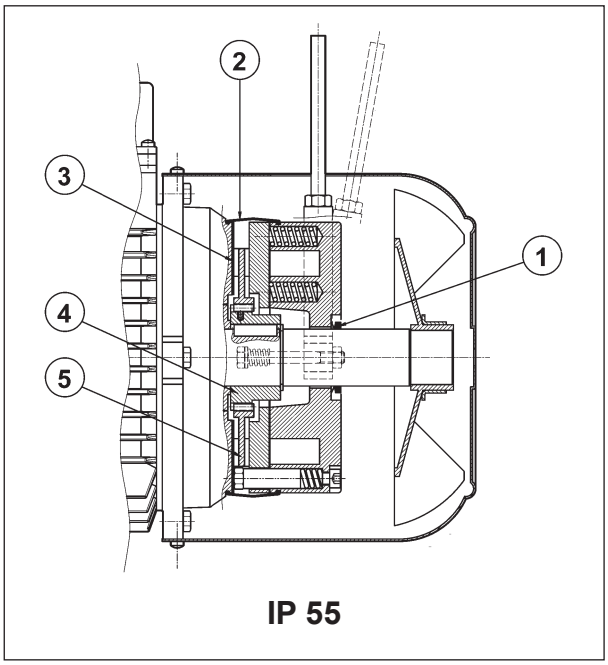

IP 55

直流环形线圈励磁制动器用螺栓固定在电机的后端盖上。预紧的弹簧提供制动线圈主体的轴向定位。
制动片可在用抗振装置固定在电机轴上的金属轴套上轴向滑动。
出厂前设定的制动力矩值已经列在相应的电机额定值图表中。通过更改弹簧的类型和/或数量，可以改变制动力矩。
按照客户要求，电机可以安装可自动复位（**R**）或可锁定制动位置（**RM**）手动释放杆。
参照“制动释放系统”章节，了解手动施放杆的不同位置。
FD制动器保证低噪音下的良好动态性能。通过合理选择整流器、供电电源和接线方式，可以使直流制动器的工作特性更好地满足使用要求。
对于涉及到提升和/或每小时高耗能的应用，请联系邦飞利技术部门。

M9.1 防护等级

标准防护等级为IP54。
FD制动电机在经过以下结构方面的改进后，防护等级可以达到**IP55**：

① 电机轴非驱动端采用的V形密封圈
② 防水和防尘橡皮套筒
③ 电机后端盖和制动片之间的不锈钢垫片
④ 不锈钢的轴套
⑤ 不锈钢制动片

M9.2 FD制动器供电电源

直流制动线圈通过安装在电机接线盒中的整流器供电，整流器和制动线圈之间的接线在出厂前完成。
对于所有的单速电机，整流器连接至电机接线板。
下表列出了整流器的标准供电电压VB，与供电频率无关。

(F34)

2, 4, 6 P					**1 speed**
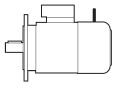		**BN_FD / M_FD** V_{mot} ± 10% 3 ~	V_B ± 10% 1 ~	制动器连接至电源接线板	单独供电
BX 80…BX 132 **BN 63…BN 132**	**MX2...MX4** **M05...M4LB**	230/400 V – 50 Hz	230 V	标准	指定 V_B SA 或 V_B SD
BX 160…BX 180 **BN 160…BN 200**	**MX5** **M4LC...M5**	400/690 V – 50 Hz	400 V	标准	指定 V_B SA 或 V_B SD

变极变速电机的整流器由独立电源供电，整流器输入电压V_B 在下表中列出：

(F35)

2/4, 2/6, 2/8, 2/12, 4/6, 4/8 P					**2 speed**
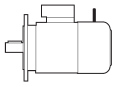		**BN_FD / M_FD** V_{mot} ± 10% 3 ~	V_B ± 10% 1 ~	制动器连接至电源接线板	单独供电
BN 63…BN 132	**M05...M4LB**	400 V – 50 Hz	230 V	⛔	指定 V_B SA 或 V_B SD

NB, SB, NBR 和 **SBR**型号采用二极管半波整流器（VDC ≈ 0,45 x VAC），详见下表：

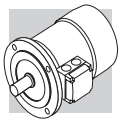

(F36)

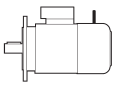		制动器	标准	按要求提供
BN 63	**M05**	**FD 02**	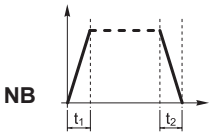	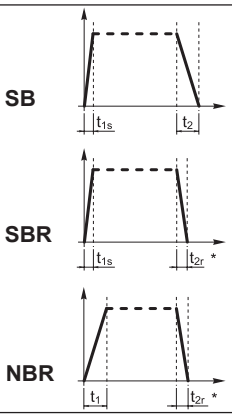
BN 71	**M1**	**FD 03** **FD 53**		
BX 80 - BN 80	**MX2 - M2**	**FD 04**		
BX 90S - BN 90S	**—**	**FD 14**		
BX 90L - BN 90L	**—**	**FD 05**		
BX 100 - BN 100	**MX3 - M3**	**FD 15**		
—		**FD 55**	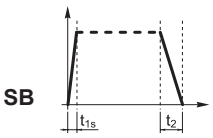	
BX 112 - BN 112	**—**	**FD 06S**		
BX 132 - BN 132 - BN 160MR	**MX4 - M4**	**FD 56** **FD 06** **FD 07**		
BX 160 - BN 160L - BN 180M	**MX5 - M5**	**FD 08**		
BX 180 - BN 180L - BN 200M	**—**	**FD 09**		
BX 200LA	**—**	**FD 20**	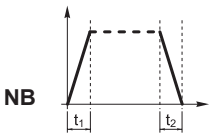	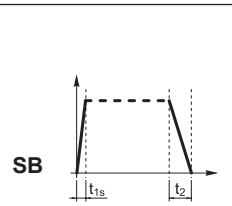
BX 225SA	**—**	**FD 25**		
BX 250M - BX 315SA	**—**	**FD 30**		
BX 315SB - BX 315SC	**—**	**FD 160**		
BX 315MA - BX 355MA	**—**	**FD 250**		
BX 355MB - BX 355MC	**—**	**FD 400**		
BX 200LAK	**—**	**FD 8**		
BX 225SAK - BX 225SBK	**—**	**FD 9**		
BX 250MAK	**—**	**FD 10**		
BX 280SAK - BX 315SAK	**—**	**FD 1000**		
BX 315SBK - BX 315SCK	**—**	**FD 1600**		
BX 355SAK - BX 355MCK	**—**	**FD 2500**	⛔	

(*) $t_{2c} < t_{2r} < t_2$

带励磁控制的**SB**整流器通电后使电磁石过励磁以缩短制动器释放响应时间，当制动器被释放后，整流器又回到半波整流状态。

以下场合必须采用**SB**整流器：
- 每小时的启动次数很高
- 制动器释放响应时间短
- 制动器热应力特别大

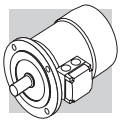

整流器**NBR**或**SBR**适用于要求快速制动干预（制动状态恢复）响应的应用场合。
这些整流器是**NB**和**SB**类型的补充，它们的电路包括了静态开关，因此当断电时可以迅速地为制动器去能。
该结构保证了在不增加外部线路和触点的情况下，很短的制动释放响应时间。
在制动电源独立供电的条件下，**NBR**和**SBR**的最佳性能才能得以充分显现。
可用的版本： 230Vac ±10%, 400Vac ± 10%, 50/60 Hz（带电源）; 100Vdc ±10%, 180Vdc ± 10%（SD选项）。

M9.3 FD制动器技术参数

下表列出了直流制动器FD的技术参数。

(F37)

制动器	制动力矩 M_b [Nm] 弹簧			释放		制动		W_{max} [J]			W	P
				t_1	t_{1s}	t_2	t_{2c}					
	6	4	2	[ms]	[ms]	[ms]	[ms]	10 s/h	100 s/h	1000 s/h	[MJ]	[W]
FD02	–	3.5	1.75	30	15	80	9	4500	1400	180	15	17
FD03	5	3.5	1.75	50	20	100	12	7000	1900	230	25	24
FD53	7.5	5	2.5	60	30	100	12					
FD04	15	10	5	80	35	140	15	10000	3100	350	30	33
FD14												
FD05	40	26	13	130	65	170	20	18000	4500	500	50	45
FD15	40	26	13	130	65	170	20					
FD06S	60	40	20	–	80	220	25	20000	4800	550	70	55
FD56	–	75	37	–	90	250	20	29000	7400	800	80	65
FD06		100	50		100	250	20					
FD07	150	100	50	–	120	200	25	40000	9300	1000	130	65
FD08*	250	200	170	–	140	350	30	60000	14000	1500	230	100
FD09**	400	300	200	–	200	450	40	70000	15000	1700	230	120
FD20	260			100	170	340	-	80000	1700	1800	-	100
FD25	400			120	195	390	-	120000	19000	2000	-	110
FD30	1000			180	210	420	-	200000	28000	2900	-	200
FD160	1600			360	245	490	-	240000	36000	2600	-	336
FD250	2500			420	343	685	-	280000	47000	3700	-	400
FD400	4000			530	455	910	-	325000	51000	4500	-	420
FD8	400			176	78	236	-	65000	7000	650	-	85
FD9	600			324	138	176	-	120000	12000	1200	-	100
FD10	800			480	194	172	-	100000	16000	2000	-	150
FD1000	1000			252	-	375	-	220000	27000	2700	-	300
FD1600	1600			366	-	498	-	230000	35000	3500	-	340
FD2500	2500			660	-	880	-	590000	61000	6100	-	530

* 弹簧的数量依次是9，7，和6根时的制动力矩

** 弹簧的数量依次是12，9，和6根时的制动力矩

t_1 = 半波整流制动释放时间
t_{1s} =带过励磁整流器的制动释放时间
t_2 = 交流断电的制动响应时间
t_{2c} = 直流和交流断电的制动响应时间，表（F30）中的t_1, t_{1s}, t_2, t_{2c}，是指在制动器设定在最大制动力矩、中等间隙和额定制动电压时的数值。
W_{max} = 每次制动的最大功耗
W = 运行时制动的功耗
P_b = 20 ° C状态下的制动功率
M_b = 静态制动力矩（±15%）
s/h = 每小时启动次数

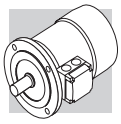

制动片的磨损取决于操作/环境条件（温度、湿度、角速度、特殊压力）；因此所列的磨损速率仅供参考。

M9.4 FD制动器的接线

对于标准的单极电机，整流器在出厂前已连接到接线板上。
对变极变速电机或要求整流器单独供电的应用场合，整流器连接电压必须遵循电机铭牌上的VB值。
由于负载性质为电感性，制动控制和直流断电的触点必须符合IEC 60947-4-1标准的AC-3使用等级。

图表（F38）-制动器从电机接线板取电，交流断电
延迟制动时间t_2和电机时间常数功能。
适用在有软启/停要求的应用场合。
图表（F39）-制动线圈单独供电，交流断电
常规制动时间与电机无关
制动时间t_2可在表格（F37）中查取。
图表（F40）-制动器从电机接线板取电，直流/交流断电
快速制动响应时间t_{2c}请参照表（F37）。
图表（F41）-制动器单独供电，交流/直流断电
制动时间随着表（F37）中所示t_{2c}值减小。

仅当制动器的标称电压与电机较小电压相同时，制动器可以直接从电机接线盒取电（从表F38到表F41）。

(F38)

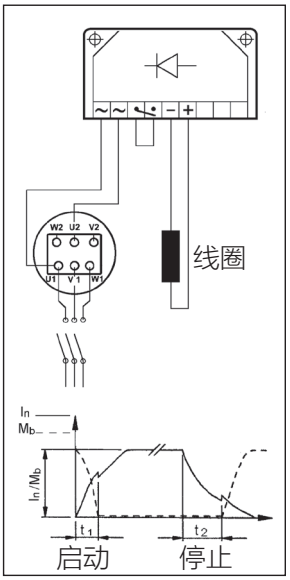

(F39)

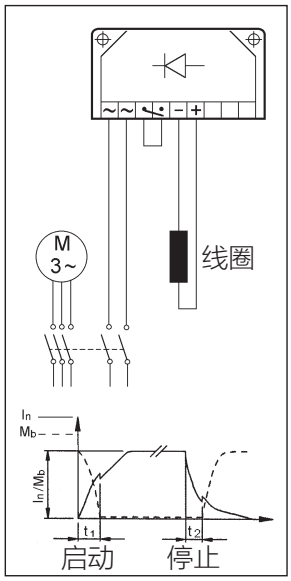

(F40)

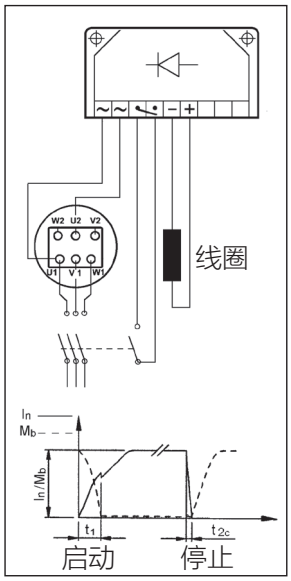

(F41)

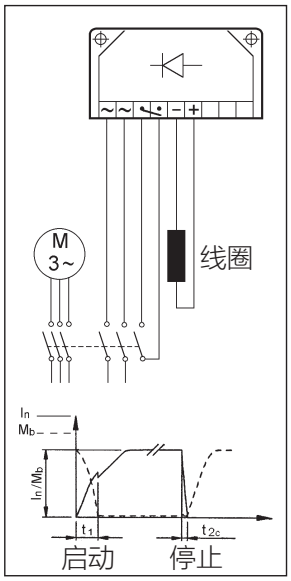

M10 BX_FA, BN_FA, MX_FA 和 M_FA系列交流制动电机

基座号: BX 80 ... BX 160L - BN 63 ... BN 180M / MX2SB ... MX5LA - M05 ... M5

(F42)

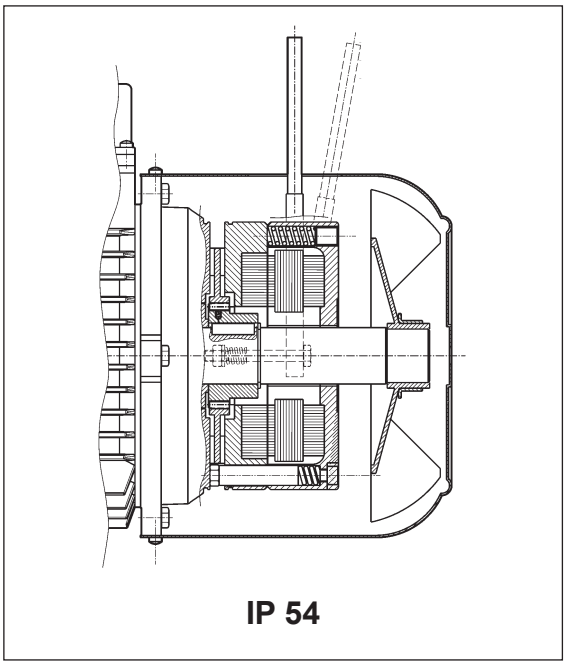

IP 54

(F43)

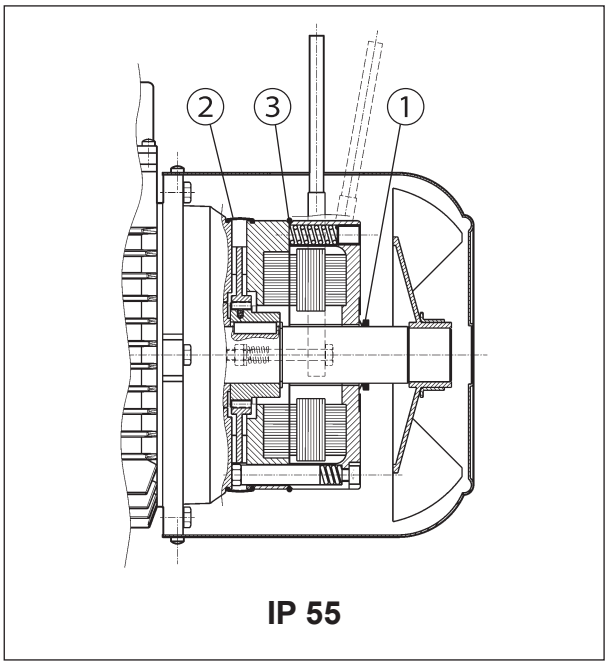

IP 55

励磁制动器由三相交流电源供电并使用螺栓固定在电机后端盖上。预紧的弹簧提供制动线圈主体的轴向定位。
金属制动片在用抗振装置固定在电机轴上的金属轴套上轴向滑动。
制动力矩出厂设置值列在相应的电机额定值图表中。
弹簧预紧螺栓可无级调整制动力矩。
力矩调整范围为30% $M_{bMAX} < M_b < M_{bMAX}$（其中$M_{bMAX}$是表 F45 中列出的最大制动力矩）。
凭借良好的动态特性，FA制动器适用于重负载以及需要频繁起停和快速响应时间的使用场合。
按照客户要求，电机可安装带自动复位（R）的手动释放杆。参照“制动释放系统”章节，了解手动施放杆的不同位置。
对于涉及到提升和/或每小时高耗能的应用，请联系邦飞利技术部门。

M10.1 防护等级

标准防护等级为IP54。
FA制动电机在经过以下结构方面的改进后，防护等级可以达到**IP55**:

① 电机轴非驱动端采用的V形密封圈
② 防水和防尘橡皮套筒
③ O形密封圈

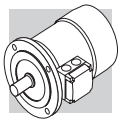

M10.2 FA制动器供电电源

对于单速电机，制动线圈从电机接线盒中取电。因此，制动电压和电机供电电压相同。此种情况下，制动电压无需另外说明。
对于多极电机和单独供电的电机，接线盒内有一块带6个接线柱的辅助接线板用于制动器接线。在这两种情况下，必须在型号中标明制动电压。
下表说明了单极和多极电机的标准交流制动电源额定值：

(F44)

	BX 80…BX 132 BN 63…BN 132	BX 160 BN 160…BN 180
单极电机	230Δ / 400Y V ±10% – 50 Hz	400Δ/ 690Y V ±10% – 50 Hz
	265Δ / 460Y ±10% - 60 Hz	460Y – 60 Hz

	BN 63…BN 132
多极电机 （单独供电）	230Δ / 400Y V ±10% – 50 Hz
	460Y - 60 Hz

除非另有说明，标准的制动电源为230Δ /400Y V – 50 Hz。

根据客户要求，可提供在 24…690 V, 50-60 Hz 范围内的特殊制动电压。

M10.3 FA制动器技术参数

(F45)

制动器	制动力矩 M_b [Nm]	释放 t_1 [ms]	制动 t_2 [ms]	W_{max} [J] 10 s/h	100 s/h	1000 s/h	W [MJ]	P [VA]
FA 02	3.5	4	20	4500	1400	180	15	60
FA 03	7.5	4	40	7000	1900	230	25	80
FA 04	15	6	60	10000	3100	350	30	110
FA 14								
FA 05	40	8	90	18000	4500	500	50	250
FA 15								
FA 06S	60	16	120	20000	4800	550	70	470
FA 06	75	16	140	29000	7400	800	80	550
FA 07	150	16	180	40000	9300	1000	130	600
FA 08	250	20	200	60000	14000	1500	230	1200

M_b = 最大静态制动力矩（ ±15% ）
t_1 = 制动释放响应时间
t_2 = 制动响应时间
W_{max} = 每次制动的最大功耗（制动器热功率）
W = 连续两次调整间隙之间移动的制动功耗
P_b = 20 ° C环境下的制动功率（50 Hz）
s/h = 每小时启动次数r

注意
表格中的t1和t2是指制动器设定在额定制动力矩、中等间隙和额定制动电压时的数值。

制动片的磨损取决于操作/环境条件（温度、湿度、角速度、特殊压力）；因此所列的磨损速率仅供参考。

M10.4 FA制动器接线

图表（下表）是制动器直接由电机主电源供电时的接线图：

(F46)

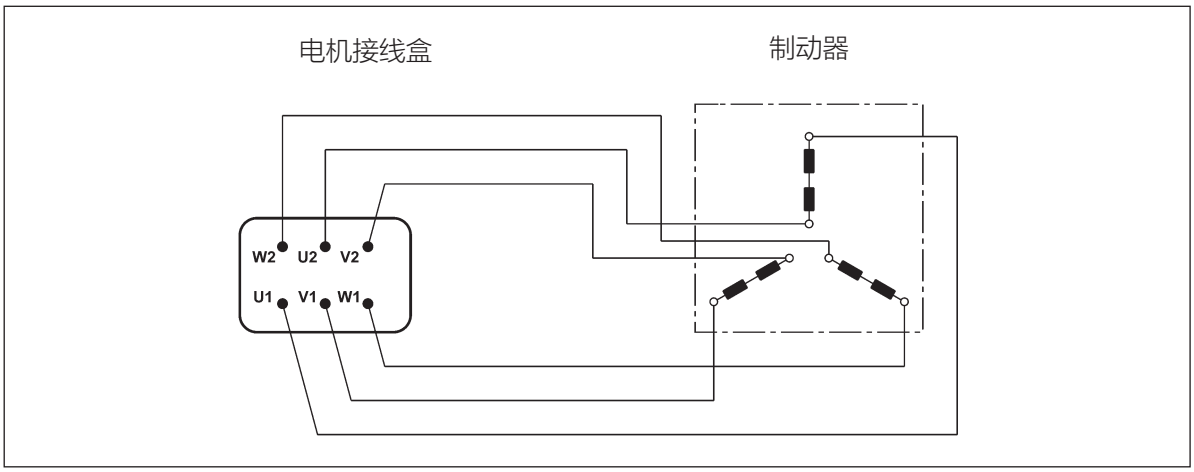

对于多极电机和按要求单独供电的单极电机，接线盒内有一块带6个接线柱的辅助接线板用于制动器接线。
这种情况下，电机的接线盒比通常接线盒要大。参照图表（下表）：

(F47)

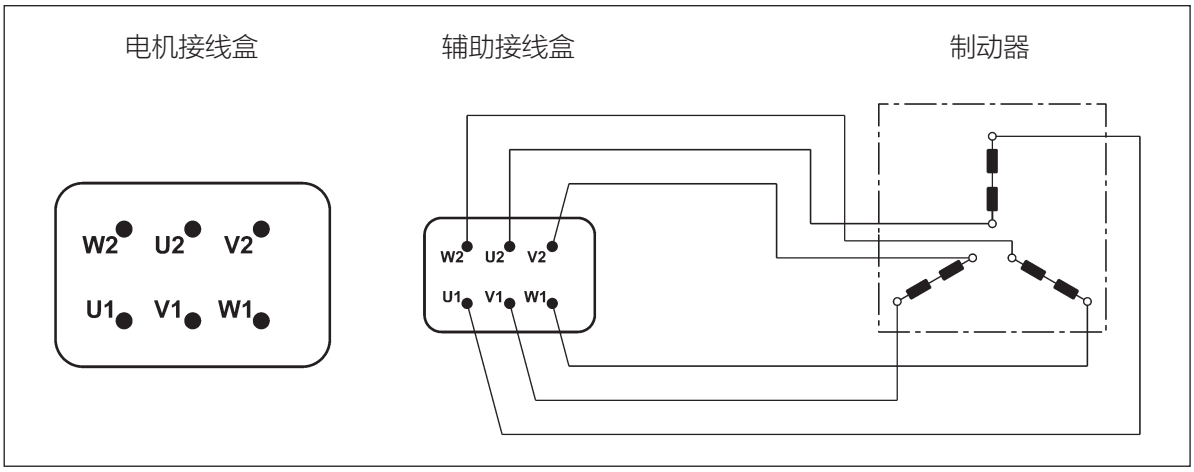

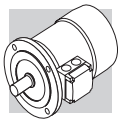

M11 制动释放系统

对于FD和FA系列的弹簧作用制动器，可以选配手动释放装置。这种装置通常在操作人员维护设备或工厂零件之前用于手动释放。

R

(F48)

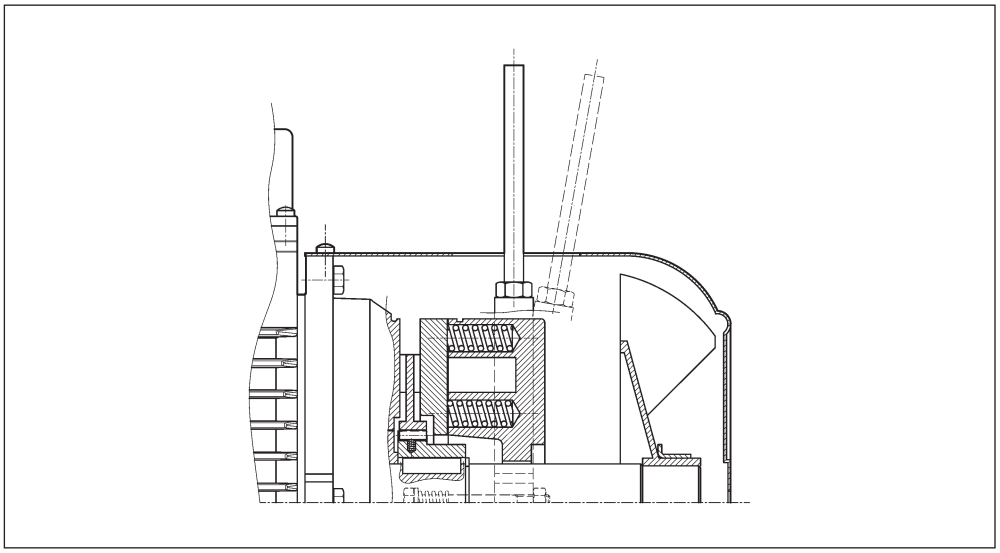

复位弹簧将释放杆拉回其最初的位置。

RM

(F49)

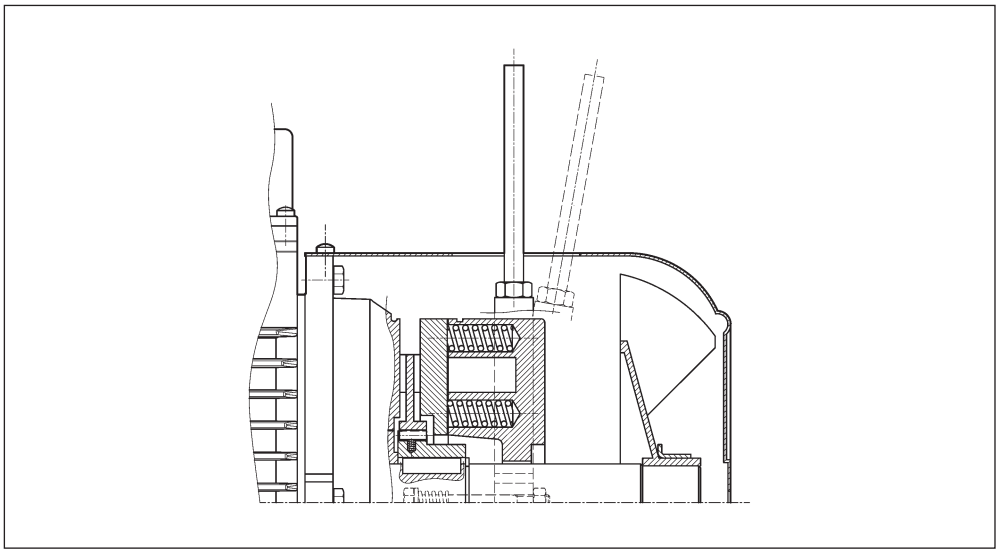

对于BN_FD系列电机，如果选用RM释放杆，通过拧紧释放杆直至其末端与制动器外壳结合，可锁定释放装置在“释放”位置。
下表描述了各种释放装置的使用场合：

(F50)

	R	RM
BX_FD BN_FD	BX 80 ... BX 180 BX 200K ... BX 315K BN 63 ... BN 200	BX 80 ... BX 132 BN 63 ... BN 132 ⛔ FD07
MX_FD M_FD	MX2 ... MX5 M05 ... M5	MX2 ... MX4 M05 ... M4LA
BX_FA BN_FA	BX 80 ... BX 160 BN 63 ... BN 180M	⛔
MX_FA M_FA	MX2 ... MX5 M05 ... M5	⛔

M11.1 释放杆的位置

除非另有说明，释放杆**R**和**RM**的标准位置与接线盒的位置成顺时针90度（下表中以字母[**AB**]表示）。
根据要求，释放杆的位置也可以是[**AA**]，[**AC**]或[**AD**]:

(F51)

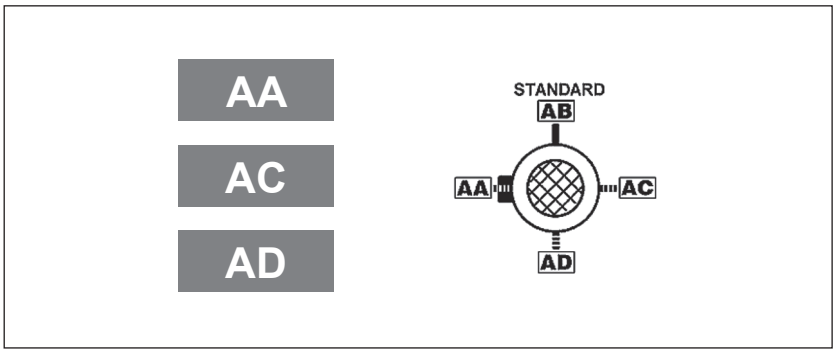

M11.2 制动器单独供电

...SA

制动线圈会直接通过一个独立线路馈电，与电机分离。
在这种情况下，必须指明该线圈的额定电压，例如：230SA。这一方案适用于配有FD型和FA型制动器的全部电机。

...SD

该制动线圈会直接供应直流电源，整流器则不属于供应范围。
必须指定该线圈的额定电压，例如：24SD。

说明：对于BX≥200和BX≥200K型电机来说，无法直接通过电机接线盒为制动器供电，因此必须选用SA或者SD选项。

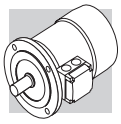

M12 选项

M12.1 软启动/停车

F1

需要软启动或软停车的应用情况，可以选用飞轮选项 – F1。飞轮增加的转动惯量可以在启动时增大动能，并且在刹车时再将动能回馈，从而使冲击载荷平稳过渡。仅BN_FD系列制动电机可选配飞轮，详细特性如下：

(F52)

不同类型电机飞轮的主要参数： BN_FD, M_FD			
		飞轮的重量 [Kg]	飞轮的转动惯量 [Kgm²]
BN 63	**M05**	0.69	0.00063
BN 71	**M1**	1.13	0.00135
BN 80	**M2**	1.67	0.00270
BN 90 S - BN 90 L	**–**	2.51	0.00530
BN 100	**M3**	3.48	0.00840
BN 112	**–**	4.82	0.01483
BN 132 S - BN 132 M	**M4**	6.19	0.02580

M12.2 电容滤波器

CF

只能针对FD型制动电机提供可选配的电容滤波器。当合适的电容滤波器安装于整流器上（选项CF），电机符合标准 EN61000-6-3:2007“电磁兼容性 – 通用排放标准 – 6-3部分：住宅，商业和轻工业环境”中对辐射的限制。

BX≥200LA和BX≥200LAK电机符合EN 61000-6-3：2007《电磁兼容性-通用发射标准-第6-3部分：居住、商业和轻工业环境》所规定的排放限值。

M12.3 热保护装置

除了磁 – 热敏装置提供的标准防护之外，内置式热敏器件也可保护电机免于因通风不畅或断续工作而造成的线圈过热。
该类附加的防护装置，通常用于强制通风电机（IC416）。

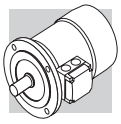

M12.4 热敏电阻

E3

热敏电阻是一些在接近额定断路温度（150° C）时，电阻值迅速发生变化的半导体。R = f(T) 特性的变化在DIN 44081，IEC 34-11标准中有具体的描述。一般采用正温度系数的热敏电阻（即通常所称的PTC“冷导体电阻”）。热敏电阻无法直接控制继电器，所以必须连接至一个合适的断开装置。如果电机采用这种保护，三个串联PTC将连接在绕组中，其接线端将位于辅助接线板上。

K1

其中我们采用的为正温度系数的PTC热敏电阻。
运行温度范围：0° C ... +260° C。
热敏电阻无法直接控制继电器，所以必须连接至一个合适的断开装置。
1 x KTY 84-130的接线端子位于辅助接线端子上。

M12.5 双金属片热敏开关

D3

该类防护装置由双金属片组成。当电机温度达到额定断路温度（150° C）时，双金属片将由厨师接触状态断开。
当温度下降的时候，金属片自动恢复至原始的接触状态。
电机通常采用三个串联的常闭式双金属热敏开关，它们的接线端位于辅助接线板上。

M12.6 连接器

CON

邦飞利提供三种连接器，分别是CON 1，CON 2，CON 3。他们可以分布在两个不同的位置：接线盒的右侧（C1D，C2D，C3D）和接线盒的左侧（C1S，C2S，C3S）。
选项CON适用于下表中列出基座号的单速BN和M电机（2，4，6，8极），BX/BE和MX/ME电机。
所有双速电机都不能选配CON。
CON 1 / CON 2连接器适用于不带制动器的BX-BE/MX-ME和BN/M电机，以及自带直流制动器FD的系列制动电机。适用的基座号请参照下表。
公连接器（带引脚）安装在电机上，邦飞利不提供母连接器。
如果选用CON选项，绕组始终是Y接线方式。
带有选项U1“强制通风”的电机，在风扇罩上的独立接线盒内提供风扇电源。
带有选项EN1...EN6的电机，编码器是由单独的电缆连接，并非连接到连接器上。
CON选项不适用于自带交流制动器FA的制动电机。
CON选项不能与下面任一选项同时选择：U2，CUS，IC。

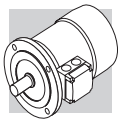

技术规格

(F53)

选项	CON 1
电机机座号	**BX 80 ... BX 112 / MX2, MX3 / BE 71 ... BE 112 / ME2, ME3 BN 63 … BN 112 / M05 ... M3**
接口视图	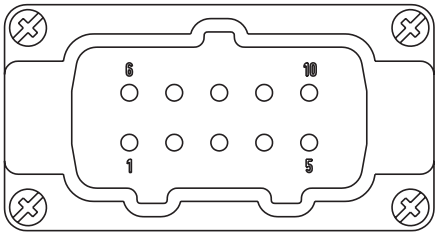
连接器类型	Harting Han 10ES
壳体	Han EMC 10B　2个手柄
针数 – 电流	10 x 16A
电压	500 Vac
接触连接	螺纹端子

(F54)

选项	CON 2
电机机座号	**BX 80 ... BX 132 / MX2, MX3 / BE 71 ... BE 132 / ME2 ... ME4 BN 63 … BN 160MR / M05 ... M4**
接口视图	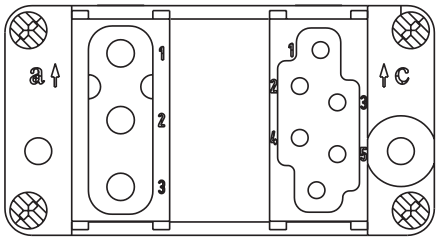
连接器类型	Harting Han Modular
壳体	Han EMC 10B　2个手柄
模块类型	模块C + 空模块 + 模块 E
针数 – 电流	3 x 36A / 6 x 16A
电压	500 Vac
接触连接	压接接触

(F55)

选项	CON 3
电机机座号	**BX 80 ... BX 132M / MX2, MX3 / BN 63 … BN 160MR / M05 ... M4**
接口视图	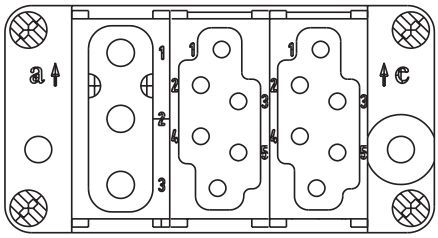
连接器类型	Harting Han Modular
壳体	Han EMC 10B　2个手柄
模块类型	模块C + 空模块 + 模块 E
针数 – 电流	3 x 36A / 6 + 6 x 16A
电压	500 Vac
接触连接	压接接触

(F56)

连接器定位

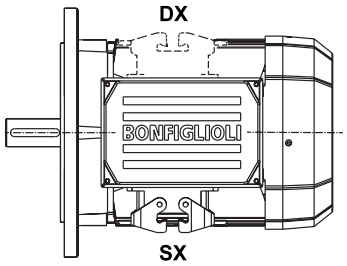

(F57)

电机不带制动器的尺寸

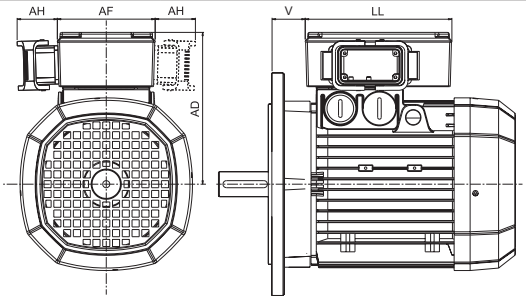

		AD (mm)	**AF** (mm)	**AH** (mm)	**LL** (mm)	**V**(*) (mm)
BN 63	**M05**	136	110	45	165	4.5
BN 71 - BE 71	**M1**	149	110	45	165	15.5
BX 80 - BE 80 - BN 80	**MX2 - ME2 - M2**	160	110	45	165	16.5
BX 90 - BE 90 - BN 90	**MX3**	162	110	45	165	31.5
BX 100 - BE 100 - BN 100	**MX3 - ME3 - M3**	171	110	45	165	37.5
BX 112 - BE 112 - BN 112	**MX4**	186	110	45	165	39
BX 132 - BE 132 - BN 132	**MX4 - ME4 - M4**	210	140	45	188	45.5
BN 160MR	**–**	210	140	45	188	161

(*) BX、BE和BN电机的尺寸

(F58)

电机配直流制动器FD时的尺寸

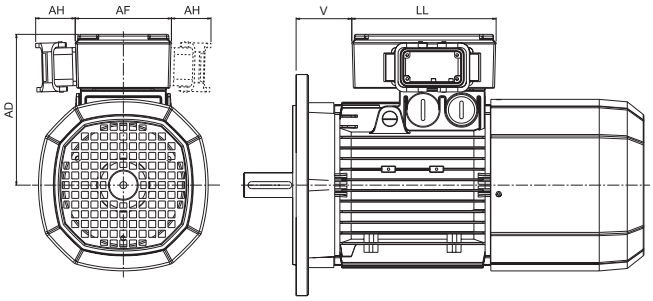

		AD (mm)	**AF** (mm)	**AH** (mm)	**LL** (mm)	**V**(*) (mm)
BN 63	**M05**	136	110	45	165	4.5
BN 71	**M1**	149	110	45	165	1.5
BX 80 - BN 80	**MX2 - M2**	160	110	45	165	18.5
BX 90 - BN 90	**—**	162	110	45	165	39.5
BX 100 - BN 100	**MX3 - M3**	171	110	45	165	63.5
BX 112 - BN 112	**—**	186	110	45	165	75
BX 132 - BN 132	**MX4 - M4**	210	140	45	188	122
BN 160MR	**—**	210	140	45	188	161

(*) BN和BX电机的尺寸

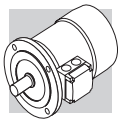

M12.7 制动控制

MSW

微动开关可以用来获取制动蹄导板状态的信号，或者在空气间隙达到最大容许值时得到反馈信号。
FD03...FD09范围内的制动器，可提供MSW选项。
微动开关设有三根引线（NC，NO，COM）。下面是带有微动开关制动器的主要组件示意图。

(F59)

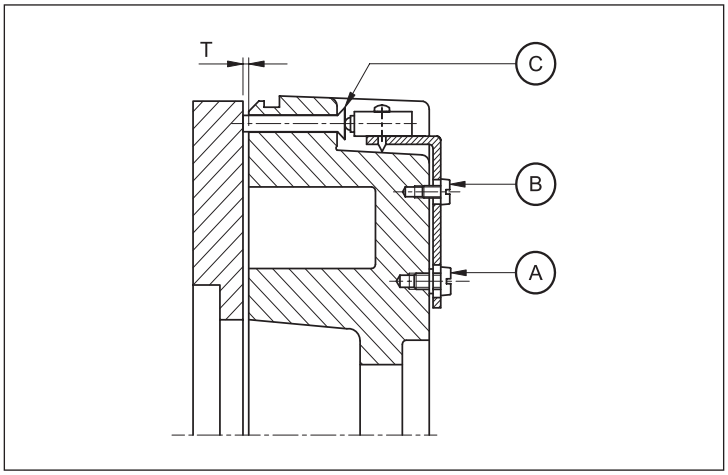

A: 板固定螺栓
B: 安装螺栓
C: 执行器控制引脚

M12.8 制动电机的辅助电缆进线口

IC

BX 80 ... BX 132 – BN 63...BN 160MR/ MX2...MX4 – M05...M4基座号范围内的制动电机，在接线盒座上配有2个M16 x 1.5的辅助电缆进线口（每侧一个）。
BX 160 ... BX 180 – BN 160...BN 200 / MX5 – M5基座号范围内的制动电机，在接线盒座上配有1个M16 x 1.5的辅助电缆进线口，位于制动器电缆进线口旁。

M12.9 防冷凝加热器

H1 **NH1**

在湿度很高或温度变化很大的应用场合，电机应安装防冷凝加热器。
防冷凝加热器由主接线盒内辅助接线板上的单相电源供电。
下表为功耗值：

(F60)

	H1	NH1
	1~ 230V ± 10% P [W]	1~ 115V ± 10% P [W]
BX 80 **BE 80** **BN 56 ... BN 80**	10	10
BX 90 ... BX 132 **BE 90 ... BE 132MB** **BN 90 ... BN 160MR**	25	25
BX 160...BX 250 **BX 160 ... BX 250K** **BX 160, BX 180** **BE 160, BE 180** **BN 160, BN 200**	50	50
BX 280 **BX 280K**	60	60
BX 315 ... BX 355 **BX 315K ... BX 355K**	120	120

警告!
运行电机前，必须将防冷凝加热器断电。

M12.10 热带环境

TP

当选择TP选项后，在高湿度和温度条件下工作的电机，其绕组会得到更多的保护。

M12.11 电机后伸轴

PS

该选项和以下选项不兼容：RC，TC，U1，U2，EN1，EN2，EN3，EN4，EN5，EN6, EN7, EN8。
有关轴的尺寸，请参照电机尺寸表。

(F61)

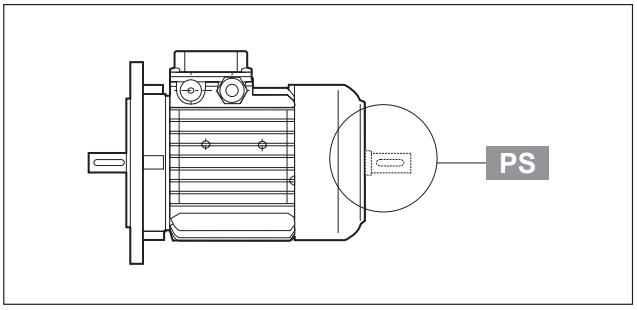

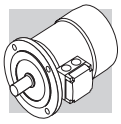

M12.12 逆止器

AL **AR**

对于必须防止倒转的应用场合，可以选用装有逆止器的电机（仅适用于MX/ME和M系列。逆止器只允许电机按要求的方向旋转，该装置在断电时防止电机轴反向转动。逆止器使用专用于这种应用场合的特殊润滑脂终身润滑。客户订货时，应明确AL或AR的选项要求。
任何时候都不得将逆止器用于因接线错误导致的反转。表（F62）说明逆止器的额定和最大锁定转矩。表（F63）是逆止器的结构示意图。电机的外形尺寸与相应的制动电机相同。“电机选项”章节中有对旋向的相关描述。

(F62)

	额定锁定转矩 [Nm]	最大锁定转矩 [Nm]	释放速度 [min^{-1}]
M1	6	10	750
ME2 M2	16	27	650
ME3 M3	54	92	520
MX4 - ME4 M4	110	205	430

(F63)

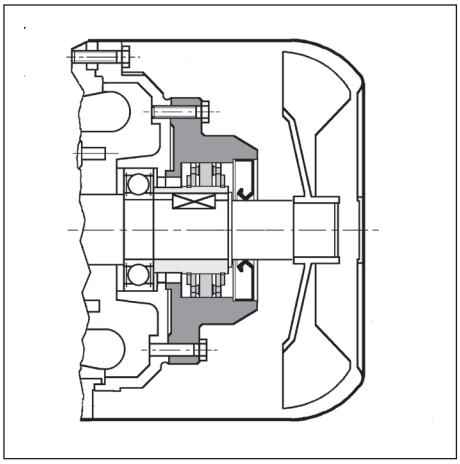

M12.13 转子动平衡

RV

对于低噪音为首要要求的应用场合，选项**RV**可确保降低电机的振动，以符合**B**级振动要求。
下表中列出了A级（正常振动等级）和B级振动的等效速率。

(F64)

振动等级	转速 n [min^{-1}]	振动速度极限值 (mm/s) **BX 80 ≤ H ≤ BX 335M ≤ BX 355MK BE 80 ≤ H ≤ BE 180L BN 56 ≤ H ≤ BN 200**
A	600 < n < 3600	1.6
B	600 < n < 3600	0.70

数值是电机空载时，自主停机过程中测得的；公差 ± 10%。

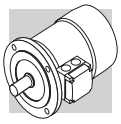

M12.14 通风

电机依靠外部的空气流动冷却（CEI EN 60034-6标准的IC411）。电机装有可双向旋转的塑料风扇。
确保风扇罩与最近的墙壁之间留有足够的距离，以保证空气的流通以及电机和制动器（如有）的维护。
对于及坐在BN 71, M1, BE 80, ME2, BX 80或MX2以上的电机，我们可以根据客户的要求提供单独供电的强制通风系统。
电机通过安装在风扇罩上的单独供电的轴流风扇冷却（即 IC416冷却系统）。
这种结构通常用于电机在变频器控制下低速恒扭矩运行或起停频率很高的使用场合。
有后伸轴（PS选项）的电机、制动电机不可配此选项。

这种冷却系统有两种形式，分别称作 U1和 U2，在长度方向的尺寸是一样的， 下表列出了风扇罩长度的增加量（Δ L）。总体尺寸可根据电机的尺寸计算获得。

(F65)

强制冷却电机的长度增加量			
		**Δ L_1**	**Δ L_2**
BN 71	**M1**	93	32
BX 80 - BE 80 - BN 80	**MX2 - ME2 - M2**	127	55
BX 90 - BE 90 - BN 90	**MX3**	131	48
BX 100 - BE 100 - BN 100	**MX3 - ME3 - M3**	119	28
BX 112 - BE 112 - BN 112	**MX4**	130	31
BX 132 - BE 132 - BN 132	**MX4 - ME4 - M4**	161	51
BX 160 ... BX 180 **BE 160 ... BE 180** **BN 160 ... BN 200L**	**MX5** **ME5** **M5**	184	184
BX 200	**—**	250	260
BX 225 - BX 250	**—**	320	320
BX 280 - BX 315	**—**	430	430
BX 355	**—**	640	640

ΔL_1 = 对应标准电机尺寸LB的增量
ΔL_2 = 对应BN制动电机尺寸LB的增量

U1

风扇从单独的接线盒取电。
对于制动电机机座号是BX 132到BX 160，BE 80到BE 160，MX 4到MX 5， ME 2到ME 5 ，BN 71到BN 160MR， M1到M4L，如果安装有U1风扇，手动释放杆就不能在AA位置。
这一选项不能与 CSA和UL标准（选项CUS）同选。

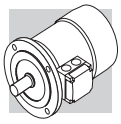

(F66)

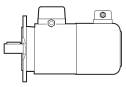

		**V a.c.** ±10%	**Hz**	**P** [W]	**I** [A]
BN 71	**M1**	1 ~ 230	50 / 60	22	0.12
BX 80 - BE 80 **BN 80**	**MX2 - ME2** **M2**			22	0.12
BX 90 - BE 90 **BN 90**	**MX3**			40	0.30
BX 100 - BE 100 **BN 100**	**MX3 - ME3** **M3**			50	0.25
BX 112 - BE 112 **BN 112**	**MX4**	3 ~ 230Δ / 400Y		50	0.26 / 0.15
BX 132 - BE 132 **BN 132 ... BN 160MR**	**MX4 - ME4** **M4L**			110	0.38 / 0.22
BX 160 - BE 160 **BN 160M ... BN 180M**	**MX5 - ME5** **M5**		50	180	1.25 / 0.72
BX 180 - BE 180 **BN 180L ... BN 200L**	**–**			250	1.51 / 0.87
BX 200 ... BX 250 **BX 200K ... BX 250K**	**–**	3 ~ 400Δ / 690Y		250	0.64
BX 280 ... BX 315M **BX 280K ... BX 315MK**	**–**			750	1.7
BX 315 ... BX 355S **BX 315LK ... BX 355SK**	**–**			1500	3.3
BX 355M **BX 355MK**	**–**			3000	6.1

U2

风扇从电机的接线盒取电。
BE，MX，ME没有U2这一选项，它可以与CUS选项（与CSA和UL标准兼容）同选。

(F67)

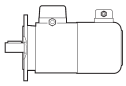

		**V a.c.** ±10%	**Hz**	**P** [W]	**I** [A]
BN 71	**M1**	1 ~ 230	50 / 60	22	0.12
BN 80	**M2**			22	0.12
BN 90	**–**			40	0.30
BN 100	**M3**	3 ~ 230Δ / 400Y		40	0.26 / 0.09
BN 112	**–**			50	0.26 / 0.15
BN 132 ... BN 160MR	**M4L**			110	0.38 / 0.22

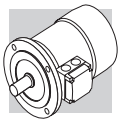

M12.15 防雨防尘罩

RC

防雨防尘罩能够防止雨水和固体颗粒进入电机。当电机是输出轴垂直朝下安装时，我们建议采用这一结构。
相关尺寸可以参看表。
当电机有 PS， EN1， EN2，EN3， EN4，EN5，EN6选项时，不能通知选用这个结构。

(F68)

		AQ	ΔV
BN 63	**M05**	118	24
BN 71 - BE 71	**M1**	134	27
BX 80 - BE 80 **BN 80**	**MX2 - ME2** **M2**	152	25
BX 90 - BE 90 **BN 90**	**MX3**	168	30
BX 100 - BE 100 **BN 100**	**MX3 - ME3** **M3**	190	28
BX 112 - BE 112 **BN 112**	**MX4**	211	32
BX 132 - BE 132 **BN 132 ... BN 160MR**	**MX4 - ME4** **M4**	254	32
BX 160 - BE 160 **BN 160M ... BN 180M**	**MX5 - ME5** **M5**	302	36
BX 180 - BE 180 **BN 180L ... BN 200L**	**—**	340	36
BX 200	**—**	423	55
BX 225	**—**	465	55
BX 250	**—**	514	55
BX 280	**—**	567	100
BX 315	**—**	645	100
BX 355	**—**	740	120

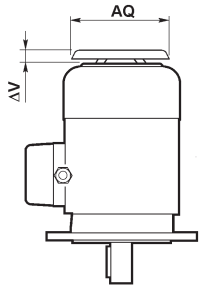

M12.16 纺织物防护罩

TC

选项TC是一个应用在纺织工业的防护罩壳，可以防止电机风扇罩后端的网格被布料覆盖后导致通风不畅。
该选项不适配EN1，EN2，EN3，EN4，EN5，EN6，PS，U1，U2。
外形尺寸和RC型防雨防尘罩相同。
BX型电机无法使用TC选项。

M12.17 反馈单元

电机与六种类型的编码器组合，可以实现不同的反馈回路。
如果电机带有后轴伸（PS）或防护罩（RC, TC），就不能同时安装编码器。

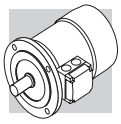

EN1

增量编码器，输入电压VIN = 5 V，线路驱动输出采用 RS 422接口标准。

EN2

增量编码器，输入电压VIN = 10-30 V，线路驱动输出采用 RS 422接口标准。

EN3

增量编码器，输入电压VIN = 12-30 V，推挽电压12-30 V。

EN4

增量编码器，输入电压VIN = 4.5-5.5 V，输出正弦波为0.5VPP

EN5

单圈绝对值编码器， 采用HIPERFACE® interface电机反馈系统的标准接口，输入电压 VIN = 7-12 V.

EN6

单圈绝对值编码器， 采用HIPERFACE® interface电机反馈系统的标准接口，输入电压 VIN = 7-12 V.

EN7

重型增量编码器，VIN = 12-30 V，推拉式输出12-30 V。

EN8

重型增量编码器，VIN = 12-30 V， 推拉式输出9-30 V。

说明：EN7和EN8仅适用于BX≥200型电机

(F69)

		EN1	EN2	EN3	EN4	EN5	EN6	EN7	EN8
接口		TTL/RS 422	TTL/RS 422	HTL push-pull	Sinus 0.5 VPP	HIPERFACE®	HIPERFACE®	HTL push-pull	HTL push-pull
电源电压	[V]	4...6	10...30	12...30	4.4...5.5	7...12	7...12	9...30	
输出电压	[V]	5	5	12...30	—	—	—	9...30	
无负载运行电流	[mA]	120	100	100	40	80	80	80	
每轮脉冲数		1024							2048
每轮步数		—	—	—	—	15 bit	15 bit	-	-
转数		—	—	—	—	—	12 bit	-	-
信号数量		6 (A, B, Z + 转换信号)			6 (cos-, cos+, sin-, sin+, Z, $\overline{Z}$)	—	—	6	6
最大输出频率	[kHz]	600			200			200	
最大转速	[min^{-1}]	6000 (9000 min^{-1} for 10 s)						6000	
温度范围	[°C]	-30 ... +100						-20 ... +85	
防护等级		IP 65						IP67	

(F70)

EN1, EN2, EN3, EN4, EN5, EN6, EN7, EN8		
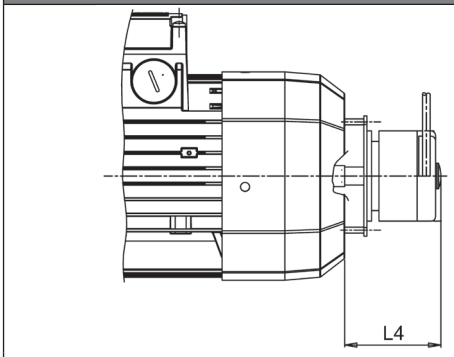		
		L4
BN 63 ... BN 200	**M05 ... M5**	65
BE 71... BE180	**ME2S ... ME5L**	65
BX 80 ... BX 180	**MX2 ... MX5L**	65
BX 200 ... BX 280	**—**	100
BX 315 ... BX 355	**—**	100

(F71)

EN_ + U1		
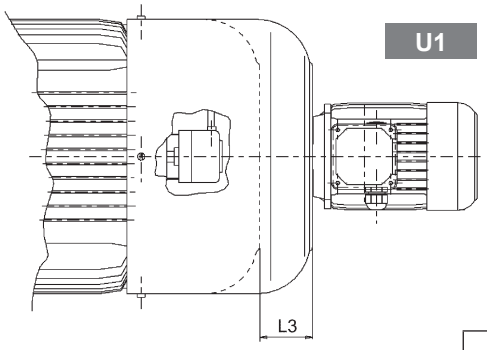		
		L3
BX 160 - BE 160 BN 160M...BN 180M	**MX5 - ME5 M5**	72
BX 160 - BE 180 BN 180L...BN 200L	**–**	82
BX 160_FD BN 160M_FD...BN 180M_FD	**MX5_FD M5_FD**	35
BX 180_FD BN 180L_FD...BN 200L_FD	**–**	41
BX 200 - BX 225 - BX 250	**–**	100
BX 280 - BX 315 - BX 355	**–**	150

如果电机BX 80 ... BX 132 – MX2 ... MX4 – BE 71 ... BE 132 – ME2 ... ME4 – BN 71 ... BN 160MR – M1 ... M4同时指定编码器（选项EN_），和单独风冷（选项U1，U2）， 电机长度的增量与相应的U1和U2选项一致。

M12.18 绝缘轴承

IB

说明：这一选项适用于BX和BX K≥280型电机，而且通过变速传动装置操作电机时必须采用。
当选用IB选项时，该电机会在传动端配备绝缘轴承。这样可以防止轴承由于高频率循环电流而出现过早损坏。

M12.19 垂直安装

VM

说明：进行垂直安装时，这一选项强制用于BX ≥ 200和BX ≥ 200K电机。
当选用VM时，应当采用特定的接法交付。
此外，还将在电机铭牌中给出垂直安装位置。

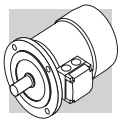

M12.20 表面保护

C_

当没有具体的防护等级要求时，电机表面（铸件）油漆 防护要求不得低于腐蚀性C2类（(UNI EN ISO 12944-2）。提高防护等级要求，电机可提供C3和C4类保护。

(F72)

表面保护	典型环境	最高表面温度.	按UNI EN ISO 12944-2对腐蚀进行分类
C3	城市和工业环境，相对湿度高达100%的（中等空气污染）	120°C	C3
C4	工业区、沿海地区、化工厂，相对湿度高达100%的（重度空气污染）	120°C	C4
C5M	海岸和近海地区高含盐量。	120°C	C5M

C3或C4类防护电机的颜色是可以选择的如果没有特殊要求（见“油漆”选项），电机油漆颜色为：RAL 7042用于BN/M、BE/ME以及BX≤180/MX型电机，而孟塞尔蓝色8B 4.5/3.25则用于BX≥200型电机。
电机也可以按UNI EN ISO 12944-2提供C5类防护，具体可联系我公司技术服务部门。

M12.21 油漆

RAL

下表中的颜色可供选择用于减速机C3或C4防护。

(F73)

油漆	颜色	RAL 号码
RAL7042	交通灰A	7042
RAL5010	龙胆蓝	5010
RAL9005	乌黑	9005
RAL9006	铝白色	9006
RAL9010	纯白色	9010
Munsell blue 8B* 4.5/3.25	蓝色	MUNSELL 8B 4.5/3.25

*BX≥200和BX≥200K的电机标准配备此颜色，带有C3保护，除非另有明确规定。

注 - “油漆” 选项只能与“表面保护”选项一起指定。

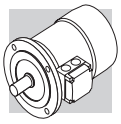

M12.22 证书

ACM

电机生产合格证
该检验证书证明产品与采购订单一致，产品生产符合邦飞利质量体系标准。

注意：不适用于BX≥200和BX≥200K的电机

CC

检验证书
该文件要求检查订单一致性，目测检查表面情况和光洁度，检查空载条件下的主要参数，以及静态和在运转情况下的气密性检查。 在每批减速机中做抽样检查并作特殊标记。

M13 电机相关表

M13.1 50赫兹的电机

(F74)

2 极							
效率等级		IE1	IE2	IE3	IE1	IE2	IE3
Pn [kW]	0.06						
	0.09						
	0.12						
	0.18	BN 63A 2			M 05A 2		
	0.25	BN 63B 2			M 05B 2		
	0.37	BN 71A 2			M 05C 2		
	0.55	BN 71B 2			M 1SD 2		
	0.75	BN 71C 2	BE 80A 2		M 1LA 2	ME 2SA 2	
		BN 80A 2					
	1.1	BN 80B 2	BE 80B 2		M 2SA 2	ME 2SB 2	
	1.5	BN 90SA 2	BE 90SA 2		M 2SB 2		
	1.85	BN 90SB 2					
	2.2	BN 90L 2	BE 90L 2		M 3SA 2		
	3	BN 100L 2	BE 100L 2		M 3LA 2	ME 3LB 2	
	4	BN 112M 2	BE 112M 2		M 3LB 2		
	5.5	BN 132SA 2	BE 132SA 2		M 4SA 2	ME 4SA 2	
	7.5	BN 132SB 2	BE 132SB 2		M 4SB 2	ME 4LA 2	
	9.2	BN 132M 2	BE 132MB 2		M 4LA 2	ME 4LB 2	
	11	BN 160MR 2	BE 160MA 2		M 4LC 2	ME 5SA 2	
		BN 160M 2					
	15	BN 160MB 2	BE 160MB 2		M 5SB 2	ME 5SB 2	
	18.5	BN 160L 2	BE 160L 2		M 5SC 2	ME 5LA 2	
	22	BN 180M 2			M 5LA 2		
	30	BN 200LA 2					

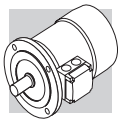

(F75)

4 极							
效率等级		IE1	IE2	IE3	IE1	IE2	IE3
Pn [kW]	0.06	BN 56A 4					
	0.09	BN 56B 4			M 0B 4		
	0.12	BN 63A 4			M 05A 4		
	0.18	BN 63B 4			M 05B 4		
	0.25	BN 63C 4			M 05C 4		
		BN 71A 4					
	0.37	BN 71B 4			M 1SD 4		
	0.55	BN 71C 4			M 1LA 4		
		BN 80A 4					
	0.75	BN 80B 4	BE 80B 4	BX 80B 4	M 2SA 4	ME 2SB 4	MX 2SB 4
	1.1	BN 80C 4	BE 90S 4	BX 90S 4	M 2SB 4	ME 3SA 4	MX 3SA 4
		BN 90S 4					
	1.5	BN 90LA 4	BE 90LA 4	BX 90LA 4	M 3SA 4	ME 3SB 4	MX 3SB 4
	1.85	BN 90LB 4					
	2.2	BN 100LA 4	BE 100LA 4	BX 100LA 4	M 3LA 4	ME 3LA 4	MX 3LA 4
	3	BN 100LB 4	BE 100LB 4	BX 100LB 4	M 3LB 4	ME 3LB 4	MX 3LB 4
	4	BN 112M 4	BE 112M 4	BX 112M 4	M 3LC 4	ME 4SA 4	MX 4SA 4
	5.5	BN 132S 4	BE 132S 4	BX 132SB 4	M 4SA 4	ME 4SB 4	MX 4SB 4
	7.5	BN 132MA 4	BE 132MA 4	BX 132MA 4	M 4LA 4	ME 4LA 4	MX 4LA 4
	9.2	BN 132MB 4	BE 132MB 4	BX 160MA 4	M 4LB 4	ME 4LB 4	MX 5SA 4
	11	BN 160MR 4	BE 160M 4	BX 160MB 4	M 4LC 4	ME 5SA 4	MX 5SB 4
		BN 160M 4					
	15	BN 160L 4	BE 160L 4	BX 160L 4	M 5SB 4	ME 5LA 4	MX 5LA 4
	18.5	BN 180M 4	BE 180M 4	BX 180M 4	M 5LA 4		
	22	BN 180L 4	BE 180L 4	BX 180L 4			
	30	BN 200L 4		BX 200LA 4*			
	37			BX 225SA 4*			
	45			BX 225SB 4*			
	55			BX 250MA 4*			
	75			BX 280SA 4*			
	90			BX 280SB 4*			
	110			BX 315SA 4*			
	132			BX 315SB 4*			
	160			BX 315SC 4*			
	200			BX 315MA 4*			
	250			BX 355MA 4*			
	315			BX 355MB 4*			
	355			BX 355MC 4*			

注意：对于澳大利亚市场，必须在BX ... K 4版本中选择这些电机

(F76)

6 极							
效率等级		IE1	IE2	IE3	IE1	IE2	IE3
Pn [kW]	0.06						
	0.09	BN 63A 6			M 05A 6		
	0.12	BN 63B 6			M 05B 6		
	0.18	BN 71A 6			M 1SC 6		
	0.25	BN 71B 6			M 1SD 6		
		BN 71C 6					
	0.37	BN 80A 6			M 1LA 6		
	0.55	BN 80B 6			M 2SA 6		
	0.75	BN 80C 6	BE 90S 6		M 2SB 6		
		BN 90S 6					
	1.1	BN 90L 6	BE 100M 6		M 3SA 6	ME 3LA 6	
	1.5	BN 100LA 6	BE 100LA 6		M 3LA 6	ME 3LB 6	
	1.85	BN 100LB 6			M 3LB 6		
	2.2	BN 112M 6	BE 112M 6		M 3LC 6		
	3	BN 132S 6	BE 132S 6		M 4SA 6	ME 4SB 6	
	4	BN 132MA 6	BE 132MA 6		M 4LA 6	ME 4LA 6	
	5.5	BN 132MB 6	BE 160MA 6		M 4LB 6	ME 5SA 6	
	7.5	BN 160M 6	BE 160MB 6		M 5SA 6	ME 5SB 6	
	9.2						
	11	BN 160L 6			M 5SB 6		
	15	BN 180L 6					
	18.5	BN 200LA 6					
	22						
	30						

M13.2 60赫兹的电机

(F77)

2 极							
效率等级		IE1	IE2	IE3	IE1	IE2	IE3
Pn [kW]	0.06						
	0.09						
	0.12						
	0.18	BN 63A 2			M 05A 2		
	0.25	BN 63B 2			M 05B 2		
	0.37	BN 71A 2			M 05C 2		
	0.55	BN 71B 2			M 1SD 2		
	0.75	BN 71C 2			M 1LA 2		
		BN 80A 2					
	1.1	BN 80B 2			M 2SA 2		
	1.5	BN 90SA 2			M 2SB 2		
	1.85	BN 90SB 2					
	2.2	BN 90L 2			M 3SA 2		
	3	BN 100L 2			M 3LA 2		
	3.7	BN 112M 2			M 3LB 2		
	5.5	BN 132SA 2			M 4SA 2		
	7.5	BN 132SB 2			M 4SB 2		
	9.2	BN 132M 2			M 4LA 2		
	11	BN 160MR 2			M 4LC 2		
		BN 160M 2					
	15	BN 160MB 2			M 5SB 2		
	18.5	BN 160L 2			M 5SC 2		
	22	BN 180M 2			M 5LA 2		
	30	BN 200LA 2					

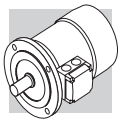

(F78)

4 极							
效率等级		IE1	IE2	IE3	IE1	IE2	IE3
Pn [kW]	0.06	BN 56A 4					
	0.09	BN 56B 4			M 0B 4		
	0.12	BN 63A 4			M 05A 4		
	0.18	BN 63B 4			M 05B 4		
	0.25	BN 63C 4			M 05C 4		
		BN 71A 4					
	0.37	BN 71B 4			M 1SD 4		
	0.55	BN 71C 4			M 1LA 4		
		BN 80A 4					
	0.75	BN 80B 4	BE 80B 4	BX 90SR 4	M 2SA 4	ME 2SB 4	MX 2SB 4
	1.1	BN 80C 4	BE 90S 4	BX 90S 4	M 2SB 4	ME 3SA 4	MX 3SA 4
		BN 90S 4					
	1.5	BN 90LA 4	BE 90LA 4	BX 90LA 4	M 3SA 4	ME 3SB 4	MX 3SB 4
	1.85	BN 90LB 4					
	2.2	BN 100LA 4	BE 100LA 4	BX 100LA 4	M 3LA 4	ME 3LA 4	MX 3LA 4
	3	BN 100LB 4	BE 100LB 4	BX 100LB 4	M 3LB 4	ME 3LB 4	MX 3LB 4
	3.7	BN 112M 4	BE 112M 4	BX 112M 4	M 3LC 4	ME 4SA 4	MX 4SA 4
	5.5	BN 132S 4	BE 132S 4	BX 132SB 4	M 4SA 4	ME 4SB 4	MX 4SB 4
	7.5	BN 132MA 4	BE 132MA 4	BX 132MA 4	M 4LA 4	ME 4LA 4	MX 4LA 4
	9.2	BN 132MB 4	BE 132MB 4	BX 160MA 4	M 4LB 4	ME 4LB 4	MX 5SA 4
	11	BN 160MR 4	BE 160M 4	BX 160MB 4	M 4LC 4	ME 5SA 4	MX 5SB 4
		BN 160M 4					
	15	BN 160L 4	BE 160L 4	BX 160L 4	M 5SB 4	ME 5LA 4	MX 5LA 4
	18.5	BN 180M 4	BE 180M 4	BX 180M 4	M 5LA 4		
	22	BN 180L 4	BE 180L 4	BX 180L 4			
	30	BN 200L 4		BX 200LAK 4			
	37			BX 225SAK 4			
	45			BX 225SBK 4			
	55			BX 280SAK 4			
	75			BX 280SBK 4			
	90			BX 315SAK 4			
	110			BX 315SBK 4			
	132			BX 315SCK 4			
	160			BX 355SAK 4			
	200			BX 355SBK 4			
	250			BX 355SCK 4			
	315			BX 355MBK 4			
	355			BX 355MCK 4			

(F79)

6 极							
效率等级		**IE1**	**IE2**	**IE3**	**IE1**	**IE2**	**IE3**
Pn [kW]	**0.06**						
	0.09	BN 63A 6			M 05A 6		
	0.12	BN 63B 6			M 05B 6		
	0.18	BN 71A 6			M 1SC 6		
	0.25	BN 71B 6			M 1SD 6		
		BN 71C 6					
	0.37	BN 80A 6			M 1LA 6		
	0.55	BN 80B 6			M 2SA 6		
	0.75	BN 80C 6			M 2SB 6		
		BN 90S 6					
	1.1	BN 90L 6			M 3SA 6		
	1.5	BN 100LA 6			M 3LA 6		
	1.85	BN 100LB 6			M 3LB 6		
	2.2	BN 112M 6			M 3LC 6		
	3	BN 132S 6			M 4SA 6		
	3.7	BN 132MA 6			M 4LA 6		
	5.5	BN 132MB 6			M 4LB 6		
	7.5	BN 160M 6			M 5SA 6		
	9.2						
	11	BN 160L 6			M 5SB 6		
	15	BN 180L 6					
	18.5	BN 200LA 6					
	22						
	30						

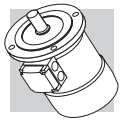

4 P	1500 min^{-1} - S1	50 Hz - IE3

CE

															直流制动器				交流制动器			
															FD				FA			
P_n kW		n min^{-1}	M_n Nm	In 400V A	η% 100%	η% 75%	η% 50%	cos φ	$\frac{I_s}{I_n}$	$\frac{M_s}{M_n}$	$\frac{M_a}{M_n}$	KVA code	J_m x 10^{-4} kgm^2	IM B5 Kg	Mod	M_b Nm	J_m x 10^{-4} kgm^2	IM B5 Kg	Mod	M_b Nm	J_m x 10^{-4} kgm^2	IM B5 Kg
0.75	**BX 80B 4**	1425	5.0	1.61	82.5	83.9	83.2	0.81	6.5	2.0	1.8	J	35	16	**FD 04**	15	37	19.9	**FA 04**	15	37	19.8
1.1	**BX 90S 4**	1425	7.4	2.44	84.1	84.1	82.0	0.77	6.9	3.4	2.2	J	27	16	**FD 14**	15	29	20.2	**FA 14**	15	29	20.1
1.5	**BX 90LA 4**	1420	10.1	3.3	85.3	86.2	84.9	0.78	6.3	3.1	1.9	J	31	17	**FD 05**	26	35	23	**FA 05**	26	35	23.7
2.2	**BX 100LA 4**	1445	14.5	5.1	86.7	86.2	84.0	0.72	7.2	3.6	2.4	K	58	24	**FD 15**	40	62	31	**FA 15**	40	62	31
3	**BX 100LB 4**	1445	19.8	6.7	87.7	87.7	86.0	0.74	7.6	3.9	2.6	K	73	29	**FD 15**	40	77	36	**FA 15**	40	77	36
4	**BX 112M 4**	1445	26	8.1	88.6	88.9	87.6	0.8	8.1	3.8	2.5	J	130	38	**FD 06S**	60	139	48	**FA 06S**	60	139	50
5.5	**BX 132SB 4**	1460	36	10.6	89.6	89.2	88.8	0.83	8.2	3.6	2.3	J	310	57	**FD 56**	75	320	70	**FA 06**	75	320	71
7.5	**BX 132MA 4**	1460	49	15.0	90.4	90.9	90.2	0.80	8.4	3.8	2.5	K	360	67	**FD 06**	100	370	80	**FA 07**	100	370	85
9.2	**BX 160MA 4**	1465	60	17.8	91.0	92.1	91.7	0.82	7.9	3.6	2.1	J	650	95	**FD 08**	170	725	125	**FA 08**	170	725	124
11	**BX 160MB 4**	1465	72	20.5	91.4	92.9	92.5	0.84	7.8	3.4	1.9	J	780	110	**FD 08**	170	855	140	**FA 08**	170	855	139
15	**BX 160L 4**	1465	98	28.1	92.1	93.2	92.6	0.82	9.0	4.1	2.3	K	890	121	**FD 08**	200	965	151	**FA 08**	200	965	150
18.5	**BX 180M 4**	1480	119	32.9	92.6	94.1	93.1	0.85	11.3	2.6	2.3	M	1560	155	**FD 09**	300	1760	195				
22	**BX 180L 4**	1475	142	38.2	93.0	93.6	92.8	0.88	10.2	2.5	2.0	L	1660	163	**FD 09**	300	1860	203				

注意：有关可用能源认证的更多详细信息，请参阅目录的专用部分。

4 P	1500 min^{-1} - S1	50 Hz - IE3

															直流制动器				交流制动器			
															FD				FA			
P_n kW		n min^{-1}	M_n Nm	In 400V A	η% 100%	η% 75%	η% 50%	cos φ	$\frac{I_s}{I_n}$	$\frac{M_s}{M_n}$	$\frac{M_a}{M_n}$	KVA code	J_m x 10^{-4} kgm^2	IM B5 Kg	Mod	M_b Nm	J_m x 10^{-4} kgm^2	IM B5 Kg	Mod	M_b Nm	J_m x 10^{-4} kgm^2	IM B5 Kg
30	**BX 200LA 4**	1483	193.2	54.8	93.6	93.9	93.4	0.84	7.5	2.7	3.2	N/A	3850	292	**FD20**	260	3910	317				
37	**BX 225SA 4**	1482	238.6	68.9	93.9	94.1	93.8	0.83	7.2	3.1	3.1	N/A	4270	322	**FD25**	400	4450	356				
45	**BX 225SB 4**	1482	290	82.3	94.2	94.4	94	0.84	8	3.2	3.5	N/A	5250	357	**FD25**	400	5430	391				
55	**BX 250MA 4**	1482	354.2	100	94.6	94.7	94	0.84	7.1	2.9	3.4	N/A	6940	406	**FD30**	1000	7540	452				
75	**BX 280SA 4**	1485	483	133	95	95.2	94.8	0.86	6.4	2.3	2.8	N/A	13800	645	**FD30**	1000	14400	691				
90	**BX 280SB 4**	1485	578	158	95.2	95.5	95.2	0.86	7.1	2.5	2.9	N/A	17300	700	**FD30**	1000	17900	746				
110	**BX 315SA 4**	1489	705	198	95.4	95.5	95	0.84	7	2.1	3	N/A	24300	930	**FD30**	1000	24900	976				
132	**BX 315SB 4**	1488	847	231	95.6	95.9	95.5	0.86	6.7	2.2	2.9	N/A	29000	1000	**FD160**	1600	30500	1121				
160	**BX 315SC 4**	1488	1026	282	95.8	96	95.8	0.85	6.9	2.2	3	N/A	32000	1065	**FD160**	1600	33500	1186				
200	**BX 315MA 4**	1487	1284	351	96	96.4	96.4	0.86	6.8	2.4	3	N/A	39000	1220	**FD250**	2500	41400	1390				
250	**BX 355MA 4**	1491	1601	435	96	96	95.6	0.86	6.4	2.1	2.9	N/A	59000	1610	**FD250**	2500	61400	1780				
315	**BX 355MB 4**	1491	2018	550	96	96.1	95.7	0.85	7.3	2.4	3.3	N/A	69000	1780	**FD400**	4000	73300	2000				
355	**BX 355MC 4**	1490	2273	616	96	96.2	95.8	0.86	6.3	2.3	2.8	N/A	72000	1820	**FD400**	4000	76300	2040				

注意：有关可用能源认证的更多详细信息，请参阅目录的专用部分。

4 P	1500 min^{-1} - S1	50 Hz - IE3

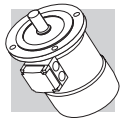

EECA

														直流制动器				交流制动器			
														FD				FA			
P_n kW		n min^{-1}	M_n Nm	In 400V A	η% 100%	η% 75%	η% 50%	cos φ	$\frac{I_s}{I_n}$	$\frac{M_s}{M_n}$	$\frac{M_a}{M_n}$	KVA code	J_m x 10^{-4} kgm^2	IM B5 Kg	Mod	M_b Nm	J_m x 10^{-4} kgm^2	IM B5 Kg	Mod	M_b Nm	J_m x 10^{-4} kgm^2	IM B5 Kg
30	**BX 200LAK 4**	1483	193	55.7	94.7	95.1	95	0.82	8.3	3	3.3	N/A	3660	319	**FD 8**	400	3940	337				
37	**BX 225SAK 4**	1482	238	65.9	95.1	95.5	95.4	0.85	7.7	2.8	3.1	N/A	5360	398	**FD 9**	600	5720	426				
45	**BX 225SBK 4**	1481	290	80.4	95.2	95.6	95.6	0.85	7.9	2.8	3.2	N/A	5360	398	**FD 9**	600	5720	426				
55	**BX 250MAK 4**	1485	354	98.9	95.6	95.8	95.5	0.84	7.9	3	3.3	N/A	9330	476	**FD 10**	800	10080	521				
75	**BX 280SAK 4**	1487	482	134	95.9	96.2	96.1	0.84	7.3	2.5	2.8	N/A	15000	665	**FD 1000**	1000	15360	771				
90	**BX 280SBK 4**	1487	578	161	96.2	96.4	96.1	0.84	7.9	2.9	3	N/A	18500	725	**FD 1000**	1000	18860	831				
110	**BX 315SAK 4**	1491	704	194	96.8	97	96.7	0.84	8.3	2.4	3.1	N/A	29000	1000	**FD 1000**	1000	29360	1106				
132	**BX 315SBK 4**	1490	846	234	96.9	97.1	96.8	0.84	8.1	2.6	3.2	N/A	32000	1065	**FD 1600**	1600	32500	1233				
160	**BX 315SCK 4**	1490	1025	279	96.7	96.9	96.6	0.86	8.2	2.7	3	N/A	39000	1220	**FD 1600**	1600	39500	1388				
200	**BX 355SAK 4**	1491	1281	345	96.6	96.7	96.4	0.87	7.3	2.1	2.7	N/A	59000	1610	**FD 2500**	2500	59500	1778				
250	**BX 355MAK 4**	1491	1601	435	96	96	95.6	0.86	6.4	2.1	2.9	N/A	69000	1780	**FD 2500**	2500	69500	1948				
315	**BX 355MBK 4**	1491	2017	550	96	96.1	95.7	0.85	7.3	2.4	3.3	N/A	72000	1820	**FD 2500**	2500	72500	1988				
355	**BX 355MCK 4**	1490	2275	616	96	96.2	95.8	0.86	6.3	2.3	2.8	N/A	84000	2140	**FD 2500**	2500	84500	2308				

注意：有关可用能源认证的更多详细信息，请参阅目录的专用部分。

4 P	1800 min^{-1} - S1	60 Hz - Nema Premium

ENERGY

															直流制动器				交流制动器			
															FD				FA			
P_n kW		n min^{-1}	M_n Nm	In 460V A	η% 100%	η% 75%	η% 50%	cos φ	$\frac{I_s}{I_n}$	$\frac{M_s}{M_n}$	$\frac{M_a}{M_n}$	KVA code	J_m x 10^{-4} kgm^2	IM B5 Kg	Mod	M_b Nm	J_m x 10^{-4} kgm^2	IM B5 Kg	Mod	M_b Nm	J_m x 10^{-4} kgm^2	IM B5 Kg
0.75	**BX 90SR 4**	1755	4.1	1.48	85.5	86.4	83.9	0.73	8.0	3.7	2.5	L	27	16	**FD 14**	15	29	20.2	**FA 14**	15	29	20.1
1.1	**BX 90S 4**	1740	6.0	2.15	86.5	85.9	83.0	0.74	8.2	4.1	2.8	K	27	16	**FD 14**	15	29	20.2	**FA 14**	15	29	20.1
1.5	**BX 90LA 4**	1735	8.3	2.91	86.5	86.5	84.4	0.75	7.4	3.6	2.5	K	31	17	**FD 05**	26	35	23	**FA 05**	26	35	23.7
2.2	**BX 100LA 4**	1760	11.9	4.4	89.5	88.6	86.2	0.71	9.9	4.8	3.6	N	73	29	**FD 15**	40	77	36	**FA 15**	40	77	36
3	**BX 100LB 4**	1750	16.4	5.9	89.5	88.9	86.7	0.71	9.1	4.4	3.3	M	73	29	**FD 15**	40	77	36	**FA 15**	40	77	36
3.7	**BX 112M 4**	1760	20	6.7	89.5	89.5	89.1	0.77	10.4	4.7	3.4	M	130	38	**FD 06S**	60	139	48	**FA 06S**	60	139	50
5.5	**BX 132SB 4**	1770	30	9.9	91.7	92.0	90.2	0.76	10.7	5.1	4.6	N	410	77	**FD 56**	75	420	90	**FA 06**	75	420	91
7.5	**BX 132MA 4**	1770	41	13.4	91.7	91.3	89.7	0.76	11.0	4.9	4.4	N	410	77	**FD 06**	100	420	90	**FA 07**	100	420	95
9.2	**BX 160MA 4**	1770	50	15.6	92.4	92.5	91.6	0.8	9.1	4.1	2.6	L	650	95	**FD 08**	170	725	125	**FA 08**	170	725	124
11	**BX 160MB 4**	1770	59	18.2	92.4	92.9	92.0	0.82	9.3	4.0	2.4	L	780	110	**FD 08**	170	855	140	**FA 08**	170	855	139
15	**BX 160L 4**	1770	81	24.5	93.0	93.5	92.5	0.81	10.9	4.8	2.8	M	890	121	**FD 08**	200	965	151	**FA 08**	200	965	150
18.5	**BX 180M 4**	1780	99	28.6	93.6	94.5	93.2	0.85	13.0	2.9	2.7	N	1560	155	**FD 09**	300	1760	195				
22	**BX 180L 4**	1775	118	33.1	93.6	94.2	93.1	0.87	11.5	2.8	2.4	M	1660	163	**FD 09**	300	1860	203				

注意：有关可用能源认证的更多详细信息，请参阅目录的专用部分。

4 P	1800 min^{-1} - S1	60 Hz - Nema Premium

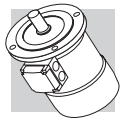

															直流制动器				交流制动器			
															FD				FA			
P_n kW		n min^{-1}	M_n Nm	In 460V A	η% 100%	η% 75%	η% 50%	cos φ	$\frac{I_s}{I_n}$	$\frac{M_s}{M_n}$	$\frac{M_a}{M_n}$	KVA code	J_m x 10^{-4} kgm^2	IM B5 Kg	Mod	M_b Nm	J_m x 10^{-4} kgm^2	IM B5 Kg	Mod	M_b Nm	J_m x 10^{-4} kgm^2	IM B5 Kg
30	**BX 200LAK 4**	1786	160	47.9	94.7	94.8	94.1	0.83	9.4	3.3	3.7	N/A	3660	319	**FD 8**	400	3940	337				
37	**BX 225SAK 4**	1784	198	57.3	95.3	95.5	94.9	0.85	8.8	2.9	3.4	N/A	5360	398	**FD 9**	600	5720	426				
45	**BX 225SBK 4**	1785	240	70.5	95.3	95.4	94.8	0.84	8.9	3	3.6	N/A	5360	398	**FD 9**	600	5720	426				
55	**BX 250MAK 4**	1787	293	85.8	95.7	95.8	95.2	0.84	9.1	3.3	3.7	N/A	9330	476	**FD 10**	800	10080	521				
75	**BX 280SAK 4**	1788	401	117	95.9	95.7	94.7	0.84	8.4	2.7	3.1	N/A	15000	665	**FD 1000**	1000	15360	771				
90	**BX 280SBK 4**	1788	481	140	96.1	95.9	95	0.84	9	3.1	3.3	N/A	18500	725	**FD 1000**	1000	18860	831				
110	**BX 315SAK 4**	1792	586	172	96.1	96	95.3	0.84	8.8	2.6	3.4	N/A	29000	1000	**FD 1000**	1000	29360	1106				
132	**BX 315SBK 4**	1791	704	206	96.4	96.3	95.6	0.84	9	2.8	3.6	N/A	32000	1065	**FD 1600**	1600	32500	1233				
160	**BX 315SCK 4**	1791	853	241	96.4	96.4	95.9	0.86	9	2.9	3.3	N/A	39000	1220	**FD 1600**	1600	39500	1388				
200	**BX 355SAK 4**	1792	1065	301	96.4	96.2	95.4	0.87	8.3	2.2	3	N/A	59000	1610	**FD 2500**	2500	59500	1778				
250	**BX 355MAK 4**	1792	1332	381	96.7	96.6	96	0.86	8.8	2.7	3.2	N/A	69000	1780	**FD 2500**	2500	69500	1948				
315	**BX 355MBK 4**	1791	1679	479	96.7	96.6	96.1	0.85	8.5	3.1	3.2	N/A	72000	1820	**FD 2500**	2500	72500	1988				
355	**BX 355MCK 4**	1792	1893	541	96.7	96.5	96.9	0.86	7.2	2.4	3.1	N/A	84000	2140	**FD 2500**	2500	84500	2308				

注意：有关可用能源认证的更多详细信息，请参阅目录的专用部分。

4 P	1500 min^{-1} - S1	50 Hz - IE3

															直流制动器				交流制动器			
															FD				FA			
P_n kW		n min^{-1}	M_n Nm	In 400V A	η% 100%	η% 75%	η% 50%	cos φ	$\frac{I_s}{I_n}$	$\frac{M_s}{M_n}$	$\frac{M_a}{M_n}$	KVA code	J_m x 10^{-4} kgm^2	IM B5 Kg	Mod	M_b Nm	J_m x 10^{-4} kgm^2	IM B5 Kg	Mod	M_b Nm	J_m x 10^{-4} kgm^2	IM B5 Kg
0.75	**MX 2SB 4**	1425	5.0	1.61	82.5	83.9	83.2	0.81	6.5	2.0	1.8	J	35	16	**FD 04**	15	37	19.9	**FA 04**	15	37	19.8
1.1	**MX 3SA 4**	1445	7.3	2.46	84.1	85.5	83.5	0.75	6.7	3.0	2.0	J	35	17	**FD 15**	15	26	24	**FA 15**	15	26	24
1.5	**MX 3SB 4**	1445	9.9	3.3	85.3	86.8	85.4	0.75	6.7	3.1	2.0	J	43	20	**FD 15**	26	47	27	**FA 15**	26	47	27
2.2	**MX 3LA 4**	1445	14.5	5.1	86.7	86.2	84.0	0.72	7.2	3.6	2.4	K	58	24	**FD 15**	40	62	31	**FA 15**	40	62	31
3	**MX 3LB 4**	1445	19.8	6.7	87.7	87.7	86.0	0.74	7.6	3.9	2.6	K	73	29	**FD 15**	40	77	36	**FA 15**	40	77	36
4	**MX 4SA 4**	1460	26	7.8	88.6	89.9	88.7	0.82	8.1	3.7	2.5	J	225	45	**FD 56**	75	235	58	**FA 06**	75	235	59
5.5	**MX 4SB 4**	1460	36	10.6	89.6	89.9	88.8	0.83	8.2	3.6	2.3	J	310	57	**FD 56**	75	320	70	**FA 06**	75	320	71
7.5	**MX 4LA 4**	1460	49	15.0	90.4	90.9	90.2	0.80	8.4	3.8	2.5	K	360	67	**FD 06**	100	370	80	**FA 07**	100	370	85
9.2	**MX 5SA 4**	1465	60	17.8	91.0	92.1	91.7	0.82	7.9	3.6	2.1	J	650	95	**FD 08**	170	725	125	**FA 08**	170	725	124
11	**MX 5SB 4**	1465	72	20.5	91.4	92.9	92.5	0.84	7.8	3.4	1.9	J	780	110	**FD 08**	170	855	140	**FA 08**	170	855	139
15	**MX 5LA 4**	1465	98	28.1	92.1	93.2	92.6	0.82	9.0	4.1	2.3	K	890	121	**FD 08**	200	965	151	**FA 08**	200	965	150

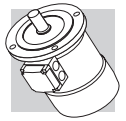

4 P	1800 min^{-1} - S1	60 Hz - IE3

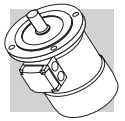

															直流制动器				交流制动器			
															FD				FA			
P_n kW		n min^{-1}	M_n Nm	In 460V A	η% 100%	η% 75%	η% 50%	cos φ	$\frac{I_s}{I_n}$	$\frac{M_s}{M_n}$	$\frac{M_a}{M_n}$	KVA code	J_m x 10^{-4} kgm^2	IM B5 Kg	Mod	M_b Nm	J_m x 10^{-4} kgm^2	IM B5 Kg	Mod	M_b Nm	J_m x 10^{-4} kgm^2	IM B5 Kg
0.75	**MX 2SB 4**	1755	4.1	1.48	85.5	86.4	83.9	0.73	8.0	3.7	2.5	L	27	16	**FD 14**	15	29	20.2	**FA 14**	15	29	20.1
1.1	**MX 3SA 4**	1755	6.0	2.19	86.5	86.0	83.0	0.73	7.9	3.3	2.5	L	35	17	**FD 15**	15	26	24	**FA 15**	15	26	24
1.5	**MX 3SB 4**	1755	8.2	2.96	86.5	87.2	85.0	0.72	8.5	3.7	2.9	L	43	20	**FD 15**	26	47	27	**FA 15**	26	47	27
2.2	**MX 3LA 4**	1760	11.9	4.4	89.5	88.6	86.2	0.71	9.9	4.8	3.6	N	73	29	**FD 15**	40	77	36	**FA 15**	40	77	36
3	**MX 3LB 4**	1750	16.4	5.9	89.5	88.9	86.7	0.71	9.1	4.4	3.3	M	73	29	**FD 15**	40	77	36	**FA 15**	40	77	36
3.7	**MX 4SA 4**	1770	20.0	6.6	89.5	89.8	87.7	0.78	9.9	4.7	3.4	M	225	45	**FD 56**	75	235	58	**FA 06**	75	235	59
5.5	**MX 4SB 4**	1770	30	9.9	91.7	92.0	90.2	0.76	10.7	5.1	4.6	N	410	77	**FD 56**	75	420	90	**FA 06**	75	420	91
7.5	**MX 4LA 4**	1770	41	13.4	91.7	91.3	89.7	0.76	11.0	4.9	4.4	N	410	77	**FD 06**	100	420	90	**FA 07**	100	420	95
9.2	**MX 5SA 4**	1770	50	15.6	92.4	92.5	91.6	0.8	9.1	4.1	2.6	L	650	95	**FD 08**	170	725	125	**FA 08**	170	725	124
11	**MX 5SB 4**	1770	59	18.2	92.4	92.9	92.0	0.82	9.3	4.0	2.4	L	780	110	**FD 08**	170	855	140	**FA 08**	170	855	139
15	**MX 5LA 4**	1770	81	24.5	93.0	93.5	92.5	0.81	10.9	4.8	2.8	M	890	121	**FD 08**	200	965	151	**FA 08**	200	965	150

BX - IM B5 - CE/CCC

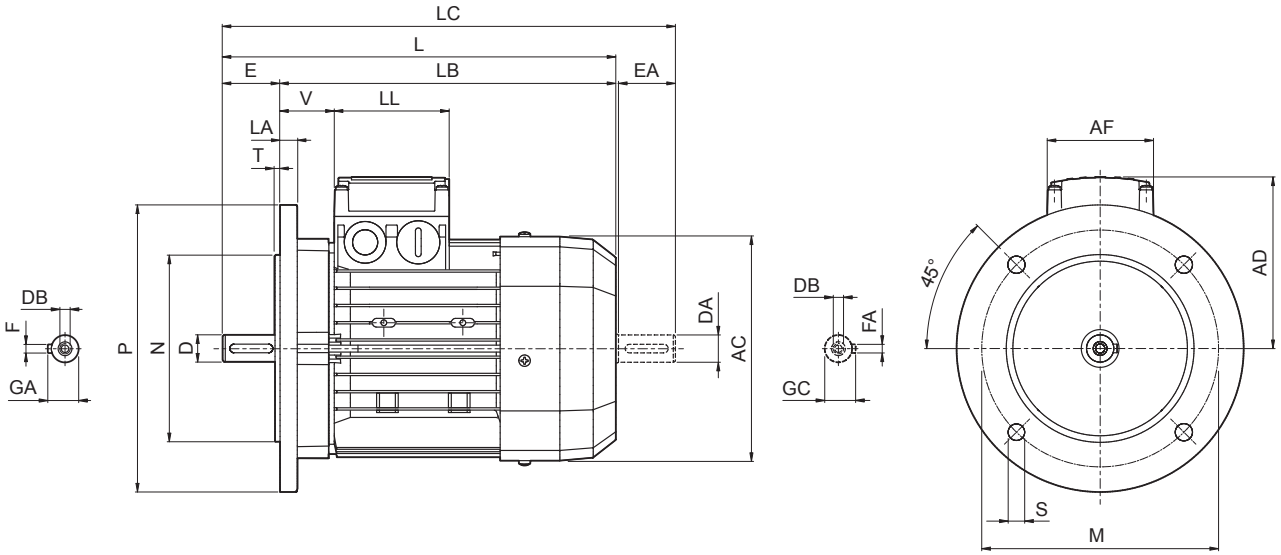

	轴					法兰						电机							
	D DA	E EA	DB	GA GC	F FA	M	N	P	S	T	LA	AC	L	LB	LC	AD	AF	LL	V
BX 80 B	19 14(1)	40 30(1)	M6 M5(1)	21.5 16(1)	6 5(1)	165	130	200	11.5	3.5	11.5	156	320	280	351	119	74	80	38
BX 90 S	24 19(1)	50 40(1)	M8 M6(1)	27 21.5 (1)	8 6(1)							176	326	276	368	133	98	98	44
BX 90 LA																			
BX 100 LA	28 24(1)	60 50(1)	M10 M8(1)	31 27(1)	8 8(1)	215	180	250	14	4	14	195	410	350	462	142			50
BX 100 LB																			
BX 112 M											15	219	430	370	482	157			52
BX 132 SB	38 28(1)	80 60(1)	M12 M10(1)	41 31(1)	10 8(1)	265	230	300			20	258	493	413	556	193	118	118	58
BX 132 MA													528	448	591				
BX 160 MA	42 38(1)	110 80(1)	M16 M12(1)	45 41(1)	12 10(1)	300	250	350	18.5	5	15	310	596	486	680	245	187	187	51
BX 160 MB													640	530	724				
BX 160 L																			
BX 180 M	48 42(1)	110 110(1)	M16 M16(1)	51.5 45(1)	14 12(1)						18	348	708	598	823	261			52
BX 180 L																			
BX 200LA	55 45(1)		M20 M20(1)	59 48.5(1)	16 14(1)	350	300	400	19		20	423	821	711	934	328	300	311	55
BX 225SA	60 55(1)	140 110(1)		64 59(1)	18 16(1)	400	350	450				465	879	739	1001	348			48
BX 225SB																			
BX 250MA	65 55(1)			69 59(1)		500	450	550			24	514	884	744	1010	376			
BX 280SA	75 65(1)	140 140(1)		79.5 69(1)	20 18(1)				18		23	567	1088	948	1238	482	434	306	43
BX 280SB																			
BX 315SA	80 75(1)	170 140(1)		85 79.5(1)	22 20(1)	600	550	660	23	6	25	645	1204	1034	1352	537	473	347	42
BX 315SB																			
BX 315SC																			
BX 315MA	90 75(1)		M24 M20(1)	95 79.5(1)	25 20(1)								1315	1145	1463				
BX 355MA	100 75(1)	210 170(1)		106 79.5(1)	28 20(1)	740	680	800				740	1479	1269	1659	603	694	413	50
BX 355MB																			
BX 355MC																			

注意：1）这些是电机尾轴的数值

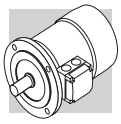

BX - IM B5 - FD/FA - CE/CCC

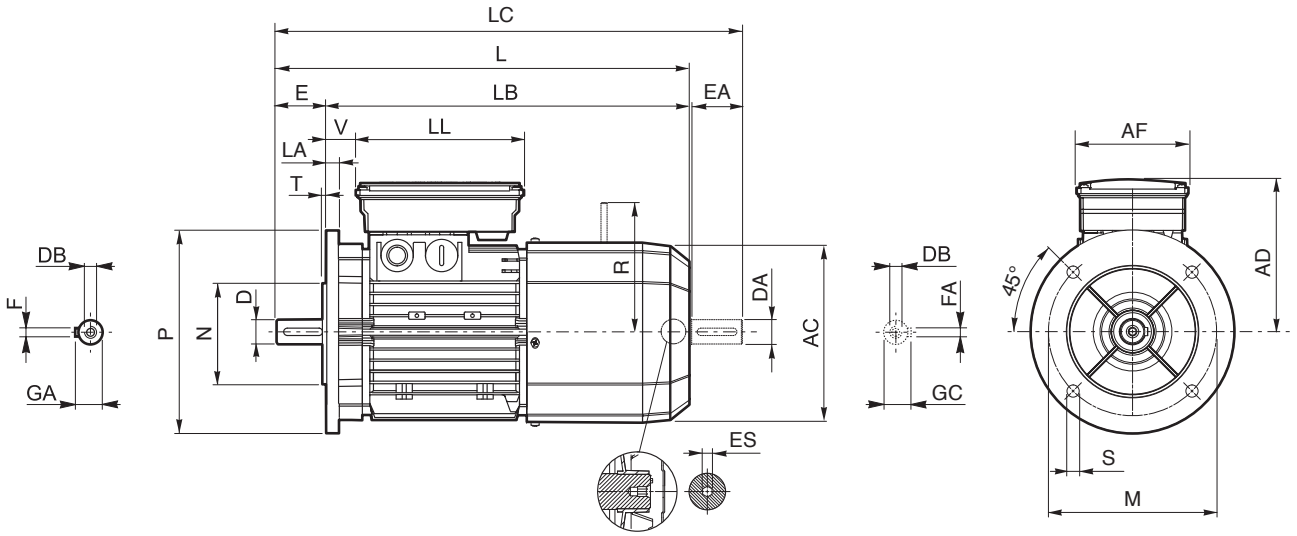

	轴					法兰						电机										
	D DA	E EA	DB	GA GC	F FA	M	N	P	S	T	LA	AC	L	LB	LC	AD	AF	LL	V	R FD	R FA	ES (2)
BX 80 B	19 14(1)	40 30(1)	M6 M5(1)	21.5 16(1)	6 5(1)	165	130	200	11.5	3.5	11.5	156	392	352	423	143	98	133	25	129	134	5
BX 90 S	24 19(1)	50 40(1)	M8 M6(1)	27 21.5 (1)	8 6(1)							176	410	360	452	146	110	165	32			6
BX 90 LA																				160	160	
BX 100 LA	28 24(1)	60 50(1)	M10 M8(1)	31 27(1)	8 8(1)	215	180	250	14	4	14	195	502	442	554	155			37			
BX 100 LB																						
BX 112 M											15	219	527	467	579	170			39	199	198	
BX 132 SB	38 28(1)	80 60(1)	M12 M10(1)	41 31(1)	10 8(1)	265	230	300			16	258	603	523	667	210	140	188	46	204	200	
BX 132 MA													627	547	690						226	
BX 160 MA	42 38(1)	110 80(1)	M16 M12(1)	45 41(1)	12 10(1)	300	250	350	18.5	5	15	310	736	626	820	245	187	187	51	266	247	—
BX 160 MB													780	670	864							
BX 160 L																						
BX 180 M	48 42(1)	110 110(1)	M16 M16(1)	51.5 45(1)	14 12(1)						18	348	866	756	981	261			52	305	—	
BX 180 L																						
BX 200LA	55 45(1)		M20 M20(1)	59 48.5(1)	16 14(1)	350	300	400	19	5	20	423	982	872	1095	328	300	311	55	320		
BX 225SA	60 55(1)	140 110(1)		64 59(1)	18 16(1)	400	350	450				465	1058	918	1180	348			48	445		
BX 225SB																						
BX 250MA	65 55(1)			69 59(1)		500	450	550			24	514	1099	959	1225	376				832		
BX 280SA	75 65(1)	140 140(1)		79.5 69(1)	20 18(1)				18		23	567	1340	1200	1490	482	434	306	43	832	—	
BX 280SB																						
BX 315SA	80 75(1)	170 140(1)		85 79.5(1)	22 20(1)	600	550	660	23	6	25	645	1452	1282	1600	537	473	347	42	832		
BX 315SB													1497	1327	1645					—		
BX 315SC																						
BX 315MA	90 75(1)		M24 M20(1)	95 79.5(1)	25 20(1)								1607	1437	1755							
BX 355MA	100 75(1)	210 170(1)		106 79.5(1)	28 20(1)	740	680	800				740	1790	1580	1970	603	694	413	50			
BX 355MB													1825	1615	2005							
BX 355MC																						

注意：1）这些是电机尾轴的数值　　2) PS双出轴结构电机尾轴上没有内六角孔

BX - IM B5 - CUS/NBR/EECA

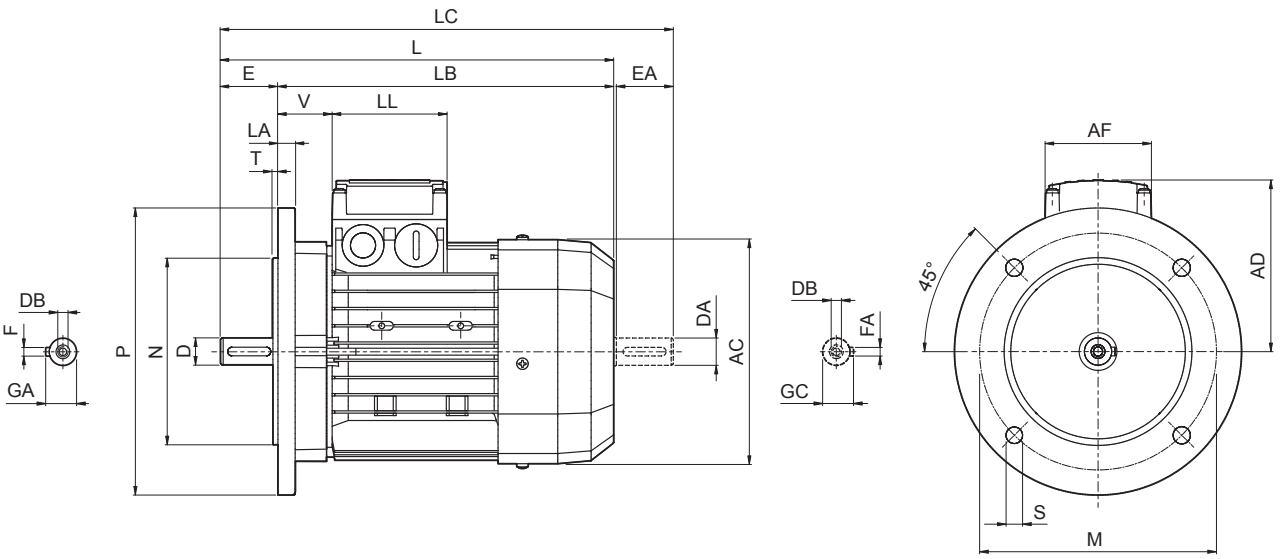

	轴					法兰						电机							
	D DA	**E EA**	**DB**	**GA GC**	**F FA**	**M**	**N**	**P**	**S**	**T**	**LA**	**AC**	**L**	**LB**	**LC**	**AD**	**AF**	**LL**	**V**
BX 90SR	19 19(1)	40 40(1)	M6 M6(1)	21.5 21.5(1)	6 6(1)	165	130	200	11.5	3.5	11.5	176	316	276	358	133	98	98	44
BX 90LA																			
BX 100LA	28 24(1)	60 50(1)	M10 M8(1)	31 27(1)	8 8(1)	215	180	250	14	4	14	195	410	350	462	142			50
BX 100LB																			
BX 112M											15	219	430	370	482	157			52
BX 132SB	38 28(1)	80 60(1)	M12 M10(1)	41 31(1)	10 8(1)	265	230	300			20	258	552	472	615	193	118	118	58
BX 132MA																			
BX 160MA	42 38(1)	110 80(1)	M16 M12(1)	45 41(1)	12 10(1)	300	250	350	18.5	5	15	310	596	486	680	245	187	187	51
BX 160MB													640	530	724				
BX 160L																			
BX 180M	48 42(1)	110 110(1)	M16 M16(1)	51.5 45(1)	14 12(1)						18	348	708	598	823	261			52
BX 180L																			
BX 200LAK	55 45(1)		M20 M16(1)	59 48.5(1)	16 14(1)	350	300	400	19		20	423	821	711	934	328	300	311	55
BX 225SAK	60 55(1)	140 110(1)	M20 M20(1)	64 59(1)	18 16(1)	400	350	450				465	879	739	1001	348			48
BX 225SBK																			
BX 250MAK	65 55(1)			69 59(1)		500	450	550			24	514	884	744	1010	376			
BX 280SAK	75 65(1)	140 140(1)		79.5 69(1)	20 18(1)				18		23	567	1088	948	1238	482	434	306	43
BX 280SBK																			
BX 315SAK	80 75(1)	170 140(1)		85 79.5(1)	22 20(1)	600	550	660	23	6	25	645	1204	1034	1352	537	473	347	42
BX 315SBK																			
BX 315SCK													1315	1145	1453				
BX 355SAK	100 75(1)	210 170(1)	M24 M20(1)	106 79.5(1)	28 20(1)	740	680	800				740	1479	1269	1659	603	694	413	50
BX 355MAK																			
BX 355MBK																			
BX 355MCK													1584	1374	1764				

注意：1）这些是电机尾轴的数值

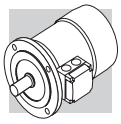

BX - IM B5 - FD/FA - CUS/NBR/EECA

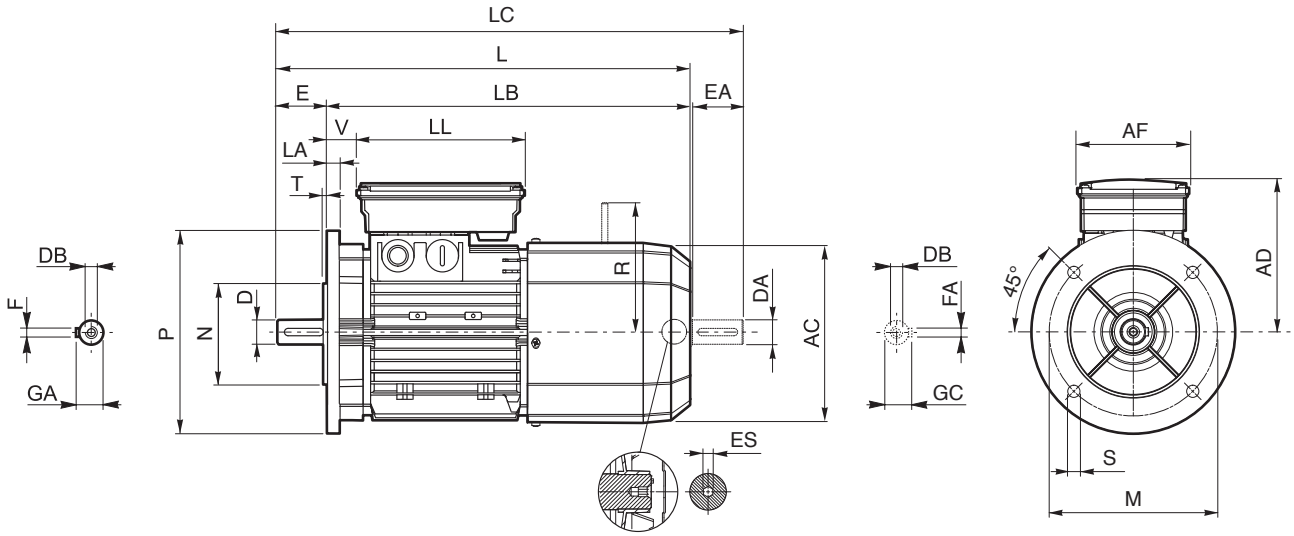

	轴					法兰						电机										
	D DA	E EA	DB	GA GC	F FA	M	N	P	S	T	LA	AC	L	LB	LC	AD	AF	LL	V	R FD	R FA	ES (2)
BX 90 SR	19 19(1)	40 40(1)	M6 M6(1)	21.5 21.5(1)	6 6(1)	165	130	200	11.5	3.5	11.5	176	400	360	442	146	110	165	32	129	134	6
BX 90 S	24 19(1)	50 40(1)	M8 M6(1)	27 21.5(1)	8 6(1)								410		452							
BX 90 LA																				160	160	
BX 100 LA	28 24(1)	60 50(1)	M10 M8(1)	31 27(1)	8 8(1)	215	180	250	14	4	14	195	502	442	554	155			37			
BX 100 LB																						
BX 112 M											15	219	527	467	579	170			39	199	198	
BX 132 SB	38 28(1)	80 60(1)	M12 M10(1)	41 31(1)	10 8(1)	265	230	300			16	258	661	581	724	210	140	188	46	204	200	
BX 132 MA																					226	
BX 160 MA	42 38(1)	110 80(1)	M16 M12(1)	45 41(1)	12 10(1)	300	250	350	18.5	5	15	310	736	626	820	245	187	187	51	266	247	—
BX 160 MB													780	670	864							
BX 160 L																						
BX 180 M	48 42(1)	110 110(1)	M16 M16(1)	51.5 45(1)	14 12(1)						18	348	866	756	981	261			52	305	—	
BX 180 L																						
BX 200LAK	55 45(1)		M20 M16(1)	59 48.5(1)	16 14(1)	350	300	400	19	5	20	417	967	857	1082	328	300	311	55	323		
BX 225SAK	60 55(1)	140 110(1)	M20 M20(1)	64 59(1)	18 16(1)	400	350	450				460	1065	925	1180	348			48	308		
BX 225SBK																						
BX 250MAK	65 55(1)			69 59(1)		500	450	550			24	510	1070	930	1240	376				363		
BX 280SAK	75 65(1)	140 140(1)		79.5 69(1)	20 18(1)				18		23	564	1284	1144	1379	482	434	306	43	500	—	
BX 280SBK																						
BX 315SAK	80 75(1)	170 140(1)		85 79.5(1)	22 20(1)	600	550	660	23	6	25	639	1493	1323	1643	537	473	347	42	678		
BX 315SBK													1530	1360	1680							
BX 315SCK													1604	1434	1791							
BX 355SAK	100 75(1)	210 170(1)	M24 M20(1)	106 79.5(1)	28 20(1)	740	680	800				725	1722	1512	1902	603	694	413	50	—		
BX 355MAK																						
BX 355MBK																						
BX 355MCK													1827	1617	2082							

注意：1）这些是电机尾轴的数值　　2) PS双出轴结构电机尾轴上没有内六角孔

MX

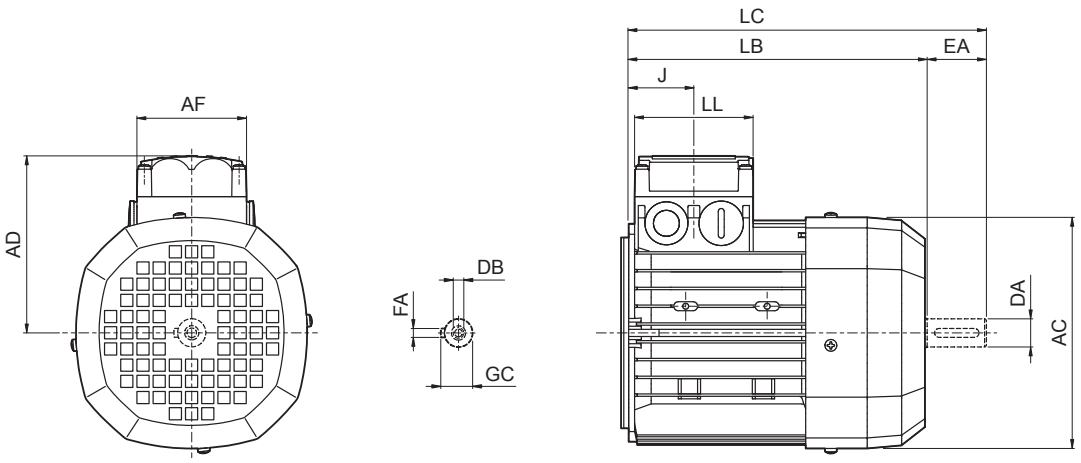

	电机尾轴					电机						
	DA	**EA**	**DB**	**GC**	**FA**	**AC**	**LB**	**LC**	**AF**	**LL**	**J**	**AD**
MX 2SB	14	30	M5	16	5	156	246	278	74	80	44	119
MX 3SA	24	50	M8	27	8	195	265	317	98	98	53.5	142
MX 3SB												
MX 3LA							305	357				
MX 3LB												
MX 4SA	28	60	M10	31		258	361	424	118	118	64.5	193
MX 4SB												
MX 4LA							396	459				
MX 5SA	38	80	M12	41	10	310	418	502	187	187	77	245
MX 5SB							462	546				
MX 5LA												

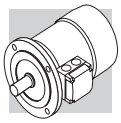

MX_FD/FA

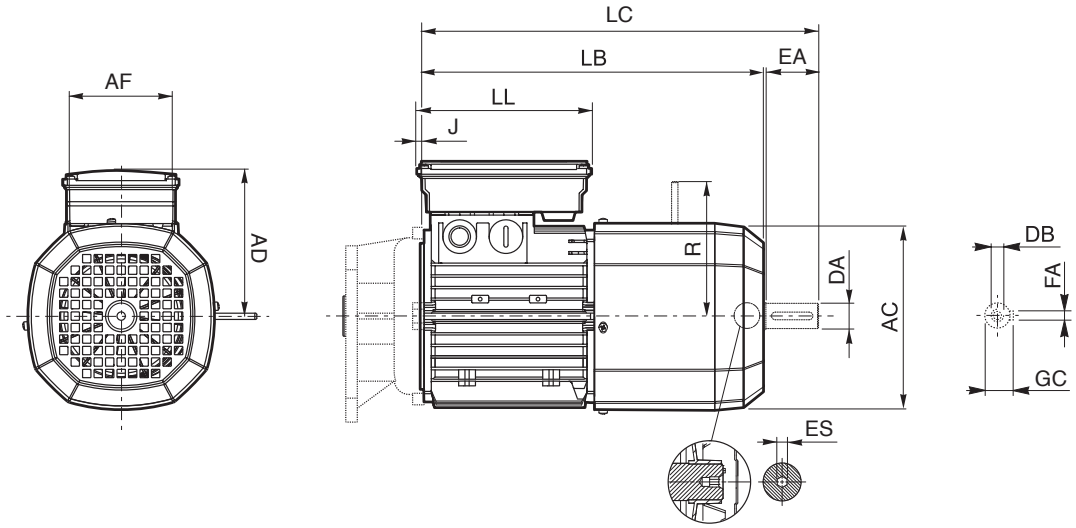

	电机尾轴					电机									
	DA	**EA**	**DB**	**GC**	**FA**	**AC**	**LB**	**LC**	**AF**	**LL**	**J**	**AD**	**R FD**	**R FA**	**ES** [1]
MX 2SB	14	30	M5	16	5	156	318	349	98	133	9	143	129	134	5
MX 3SA	24	50	M8	27	8	195	355	407	110	165	7	155	160	160	6
MX 3SB															
MX 3LA							397	450							
MX 3LB															
MX 4SA	28	60	M10	31		258	470	534	140	188		210	204	200	
MX 4SB															
MX 4LA							494	558						226	
MX 5SA	38	80	M12	41	10	310	558	644	187	187	17	245	266	247	—
MX 5SB							602	686							
MX 5LA															

注意：
1）PS双出轴结构电机尾轴上没有内六角孔

MX CUS

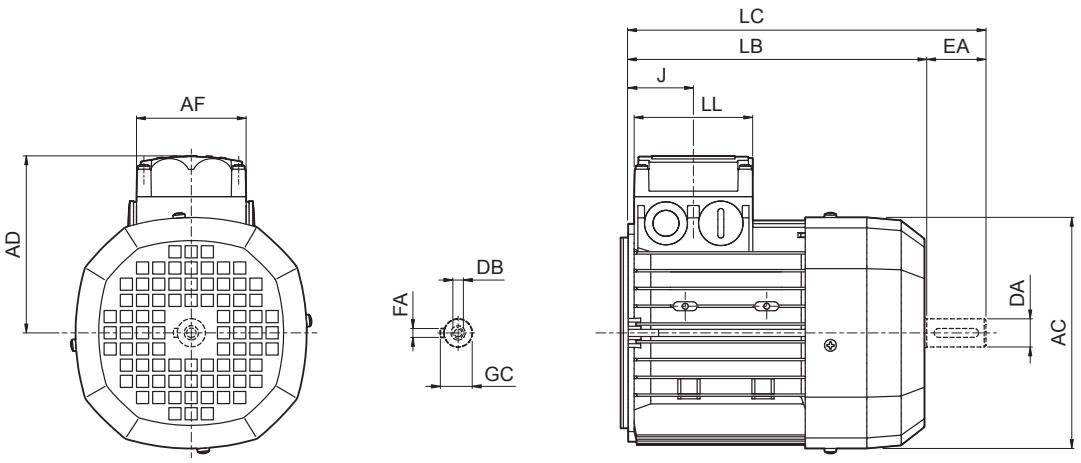

	电机尾轴					电机						
	DA	**EA**	**DB**	**GC**	**FA**	**AC**	**LB**	**LC**	**AF**	**LL**	**J**	**AD**
MX 2SB	14	30	M5	16	5	176	262	293	98	98	79	133
MX 3SA	24	50	M8	27	8	195	265	317			53.5	142
MX 3SB												
MX 3LA							305	357				
MX 3LB												
MX 4SA	28	60	M10	31		258	361	424	118	118	64.5	193
MX 4SB							420	483				
MX 4LA												
MX 5SA	38	80	M12	41	10	310	418	502	187	187	77	245
MX 5SB							462	546				
MX 5LA												

MX_FD/FA CUS

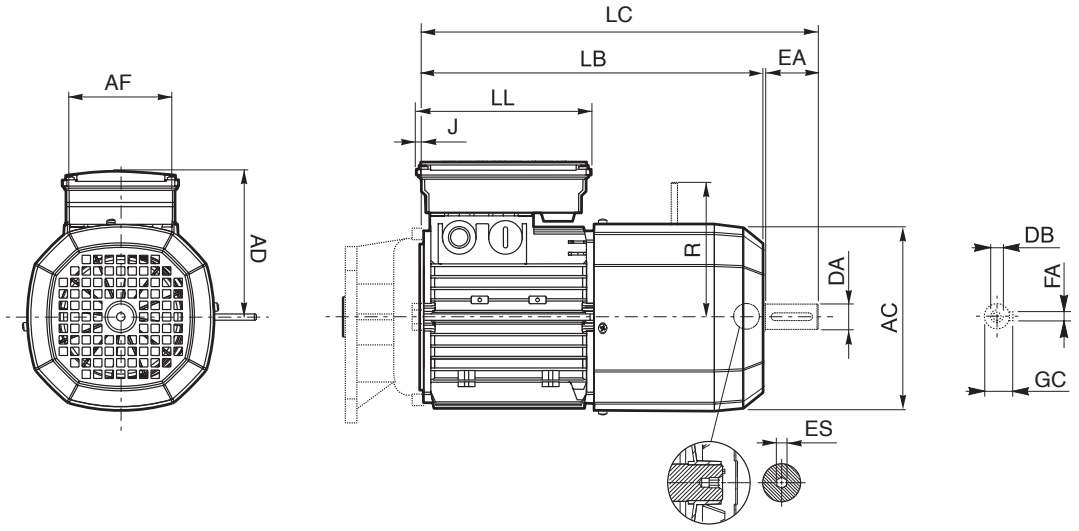

	电机尾轴					电机									
	DA	**EA**	**DB**	**GC**	**FA**	**AC**	**LB**	**LC**	**AF**	**LL**	**J**	**AD**	**R FD**	**R FA**	**ES (1)**
MX 2SB	14	30	M5	16	5	176	347	379	110	165	-17	146	129	134	6
MX 3SA	24	50	M8	27	8	195	355	407			7	155	160	160	
MX 3SB															
MX 3LA							397	450							
MX 3LB															
MX 4SA	28	60	M10	31		258	470	534	140	188		210	204	200	
MX 4SB							528	592							
MX 4LA														226	
MX 5SA	38	80	M12	41	10	310	558	644	187	187	17	245	266	247	—
MX 5SB							602	686							
MX 5LA															

注意：
1）PS双出轴结构电机尾轴上没有内六角孔

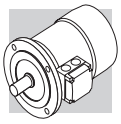

M16 BE-ME电机额定值表

2 P	3000 min^{-1} - S1	50 Hz - IE2

P_n kW			n min^{-1}	M_n Nm	In 400V A	η% 100%	η% 75%	η% 50%	cos φ	I_s/I_n	M_s/M_n	M_a/M_n	J_m x 10^{-4} kgm^2	IM B5 Kg
0.75	**BE 80A**	**2**	2860	2.5	1.65	80.0	79.6	76.4	0.83	6.8	3.8	3.5	9.0	9.5
1.1	**BE 80B**	**2**	2845	3.7	2.35	81.5	82.2	79.9	0.83	6.9	3.8	3.1	11.4	11.3
1.5	**BE 90SA**	**2**	2865	5.0	3.2	81.3	80.7	78.1	0.82	6.8	3.6	2.8	12.5	12.3
2.2	**BE 90L**	**2**	2870	7.3	4.7	83.2	83.1	80.8	0.82	6.9	3.1	2.9	16.7	14
3	**BE 100L**	**2**	2880	9.9	6.2	84.6	84.6	83.7	0.83	7.3	3.5	3.1	39	23
4	**BE 112M**	**2**	2920	13.1	8.2	85.8	85.5	84.3	0.82	7.9	3.5	3.1	57	28
5.5	**BE 132SA**	**2**	2925	18.0	10.6	87.0	85.0	81.7	0.86	8.5	3.6	3.3	145	42
7.5	**BE 132SB**	**2**	2935	24	14.3	88.1	87.4	84.7	0.86	8.8	3.9	3.6	178	53
9.2	**BE 132MB**	**2**	2920	30	16.4	88.8	86.5	84.2	0.91	8.4	3.7	3.3	210	65
11	**BE 160MA**	**2**	2940	36	20.0	89.4	89.5	88.0	0.89	8.1	3.0	2.9	340	84
15	**BE 160MB**	**2**	2950	49	27.2	90.5	90.5	89.5	0.88	8.5	3.0	2.8	420	97
18.5	**BE 160L**	**2**	2945	60	32	90.9	90.5	89.8	0.91	7.7	2.9	2.7	490	109

4 P	1500 min^{-1} - S1	50 Hz - IE2

P_n kW			n min^{-1}	M_n Nm	In 400V A	η% 100%	η% 75%	η% 50%	cos φ	I_s/I_n	M_s/M_n	M_a/M_n	J_m x 10^{-4} kgm^2	IM B5 Kg
0.37	**BE 71B**	**4**	1385	2.55	1.05	70.1	69.3	64.2	0.75	4.0	2.3	2.2	6.9	5.9
0.55	**BE 80A**	**4**	1405	3.7	1.41	75.1	74.9	71.2	0.76	4.3	2.2	1.9	15	8.2
0.75	**BE 80B**	**4**	1430	5.0	1.65	81.0	80.5	78.0	0.81	6.1	3.2	3.0	28	12.2
1.1	**BE 90S**	**4**	1430	7.4	2.53	82.5	82.0	79.5	0.76	6.3	2.9	2.8	28	13.6
1.5	**BE 90LA**	**4**	1430	10.0	3.5	83.5	83.0	80.0	0.74	5.9	3.1	3.0	34	15.1
2.2	**BE 100LA**	**4**	1430	14.7	4.9	85.4	85.0	84.0	0.76	5.8	3.0	2.8	54	22
3	**BE 100LB**	**4**	1420	20	6.6	85.5	86.0	85.5	0.77	5.9	2.8	2.6	61	24
4	**BE 112M**	**4**	1440	27	8.3	87.0	87.0	86.0	0.80	6.5	2.8	2.8	105	32
5.5	**BE 132S**	**4**	1460	36	11.1	88.5	88.5	87.5	0.81	7.3	2.9	2.9	270	53
7.5	**BE 132MA**	**4**	1460	49	14.8	89.0	89.0	88.5	0.82	6.9	2.9	2.8	319	59
9.2	**BE 132MB**	**4**	1460	60	18.1	89.5	89.5	88.5	0.82	6.9	2.9	3.0	360	70
11	**BE 160M**	**4**	1465	72	21.5	91.0	91.3	90.5	0.81	6.5	2.8	2.6	650	99
15	**BE 160L**	**4**	1465	98	28.7	90.8	91.0	90.5	0.83	6.5	2.6	2.3	790	115
18.5	**BE 180M**	**4**	1465	121	35	91.6	92.0	91.3	0.83	6.5	2.6	2.5	1250	135
22	**BE 180L**	**4**	1465	143	41	91.6	91.8	91.4	0.84	6.8	2.7	2.6	1650	157

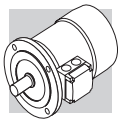

6 P	1000 min^{-1} - S1	50 Hz - IE2

P_n kW		n min^{-1}	M_n Nm	In 400V A	η% 100%	η% 75%	η% 50%	cos φ	$\frac{I_s}{I_n}$	$\frac{M_s}{M_n}$	$\frac{M_a}{M_n}$	J_m x 10^{-4} kgm^2	IM B5 Kg
0.75	**BE 90S 6**	935	7.7	2.06	75.9	75.9	73.0	0.69	5.1	3.1	2.9	33	15
1.1	**BE 100M 6** (*)	945	11.1	2.75	78.1	76.2	73.0	0.74	4.9	2.2	1.9	82	22
1.5	**BE 100LA 6**	945	15.2	3.9	79.8	77.5	74.0	0.72	5.6	2.5	2.3	95	24
2.2	**BE 112M 6**	950	22	5.2	81.8	81.8	79.3	0.74	5.2	2.6	2.3	168	32
3	**BE 132S 6**	955	30	6.6	83.3	83.3	82.4	0.79	6.1	2.1	1.9	295	44
4	**BE 132MA 6**	965	40	8.7	84.6	85.0	83.1	0.79	6.9	2.2	2.0	383	56
5.5	**BE 160MA 6** (*)	965	54	11.6	87.0	87.0	86.4	0.79	6.6	2.5	2.3	740	83
7.5	**BE 160MB 6** (*)	965	74	15.0	88.0	88.0	87.2	0.82	6.6	2.3	2.1	970	103

(*) 功率 /尺寸关系非标

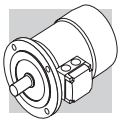

2 P	3000 min^{-1} - S1	50 Hz - IE2

P_n kW			n min^{-1}	M_n Nm	In 400V A	η% 100%	η% 75%	η% 50%	cos φ	I_s/I_n	M_s/M_n	M_a/M_n	J_m x 10^{-4} kgm^2	IM B9 Kg
0.75	**ME 2SA**	**2**	2860	2.5	1.63	80.0	79.6	76.4	0.83	6.8	3.8	3.5	9.0	8.8
1.1	**ME 2SB**	**2**	2845	3.7	2.35	81.5	82.2	79.9	0.83	6.9	3.8	3.1	11.4	10.6
1.5	**ME 3SA**	**2**	2845	5.0	3.2	81.3	79.0	76.0	0.84	6.1	2.9	2.7	24	15.5
2.2	**ME 3LA**	**2**	2895	7.3	4.8	83.2	83.2	81.5	0.80	6.3	2.7	2.5	31	18.7
3	**ME 3LB**	**2**	2880	9.9	6.2	84.6	84.6	83.7	0.83	7.3	3.5	3.1	39	22
4	**ME 4SA**	**2**	2900	13.2	7.8	85.8	84.5	82.2	0.87	7.0	2.9	2.8	101	33
5.5	**ME 4SB**	**2**	2925	18.0	10.6	87.0	85.0	81.7	0.86	8.5	3.6	3.3	145	40
7.5	**ME 4LA**	**2**	2935	24	14.3	88.1	87.4	84.7	0.86	8.8	3.9	3.6	178	51
9.2	**ME 4LB**	**2**	2920	30	16.4	88.8	86.5	84.2	0.91	8.4	3.7	3.3	210	60
11	**ME 5SA**	**2**	2940	36	20.0	89.4	89.5	88.0	0.89	8.1	3.0	2.9	340	70
15	**ME 5SB**	**2**	2950	49	27.2	90.5	90.5	89.5	0.88	8.5	3	2.8	420	83
18.5	**ME 5LA**	**2**	2945	60	32	90.9	90.5	89.8	0.91	7.7	2.9	2.7	490	95

4 P	1500 min^{-1} - S1	50 Hz - IE2

P_n kW			n min^{-1}	M_n Nm	In 400V A	η% 100%	η% 75%	η% 50%	cos φ	I_s/I_n	M_s/M_n	M_a/M_n	J_m x 10^{-4} kgm^2	IM B9 Kg
0.75	**ME 2SB**	**4**	1430	5.0	1.65	81.0	80.5	78.0	0.81	6.1	3.2	3	28	10.9
1.1	**ME 3SA**	**4**	1430	7.4	2.60	82.5	82.0	79.0	0.74	5.5	2.5	2.8	34	15.5
1.5	**ME 3SB**	**4**	1420	10.1	3.48	84.0	84.0	83.0	0.74	6.2	2.9	2.9	40	17
2.2	**ME 3LA**	**4**	1430	14.7	4.89	85.4	85.0	84.0	0.76	5.8	3	2.8	54	21
3	**ME 3LB**	**4**	1420	20	6.58	85.5	86.0	85.5	0.77	5.9	2.8	2.6	61	23
4	**ME 4SA**	**4**	1440	27	8.25	87.5	86.8	84.0	0.80	7.1	3.0	3.1	213	42
5.5	**ME 4SB**	**4**	1460	36	11.07	88.5	88.5	87.5	0.81	7.3	2.9	2.9	270	51
7.5	**ME 4LA**	**4**	1460	49	14.83	89.0	89.0	88.5	0.82	6.9	2.9	2.8	319	57
9.2	**ME 4LB**	**4**	1460	60	18.09	89.5	89.5	88.5	0.82	6.9	2.9	3	360	65
11	**ME 5SA**	**4**	1465	72	21.54	91.0	91.3	90.5	0.81	6.5	2.8	2.6	650	85
15	**ME 5LA**	**4**	1465	98	28.73	90.8	91.0	90.5	0.83	6.5	2.6	2.3	790	101

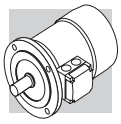

6 P	1000 min^{-1} - S1	50 Hz - IE2

P_n kW		n min^{-1}	M_n Nm	In 400V A	η% 100%	η% 75%	η% 50%	cos φ	I_s/I_n	M_s/M_n	M_a/M_n	J_m x 10^{-4} kgm^2	IM B9 Kg
0.75	**ME 3SA 6**	940	7.6	1.98	75.9	75.0	70.7	0.72	4.7	2.2	2.0	33	17
1.1	**ME 3LA 6** (*)	945	11.1	2.75	78.1	76.2	73.0	0.74	4.9	2.2	1.9	82	21
1.5	**ME 3LB 6**	945	15.2	3.8	79.8	77.5	74.0	0.72	5.6	2.5	2.3	95	23
2.2	**ME 4SA 6**	955	22	4.9	81.8	81.8	80.0	0.80	5.7	1.9	1.7	216	34
3	**ME 4SB 6**	955	30	6.6	83.3	83.3	82.4	0.79	6.1	2.1	1.9	295	43
4	**ME 4LA 6**	965	40	8.6	84.6	85	83.1	0.79	6.9	2.2	2	383	54
5.5	**ME 5SA 6** (*)	965	54	11.6	87.0	87.0	86.4	0.79	6.6	2.5	2.3	740	69
7.5	**ME 5SB 6** (*)	965	74	15.0	88.0	88.0	87.2	0.82	6.6	2.3	2.1	970	89

(*) 功率 /尺寸关系非标

BE - IM B5

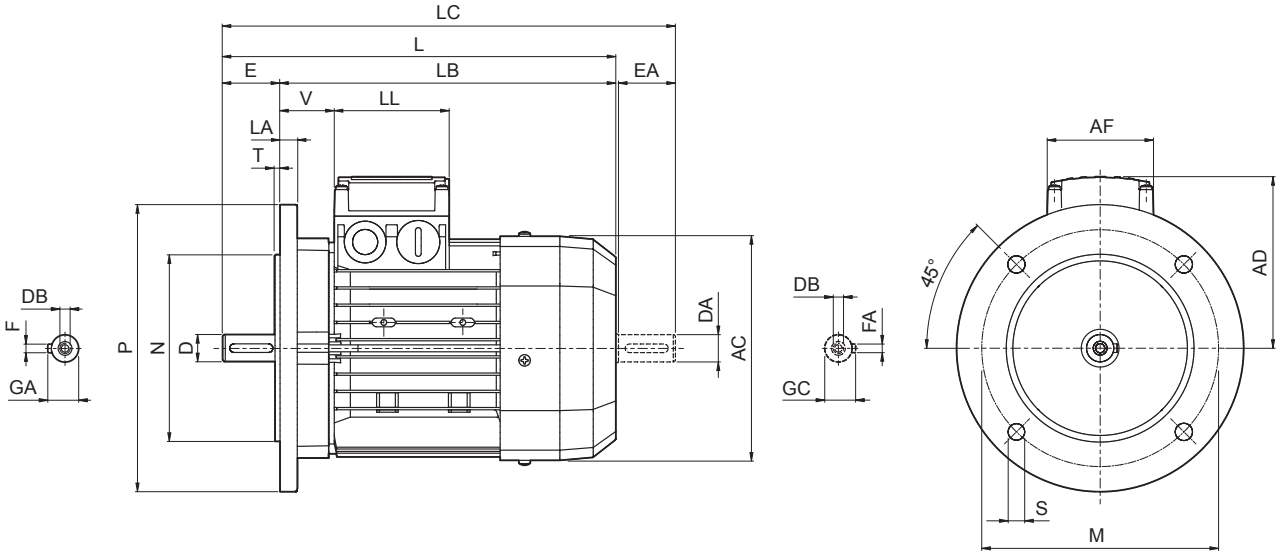

	轴					法兰						电机							
	D DA	E EA	DB	GA GC	F FA	M	N	P	S	T	LA	AC	L	LB	LC	AD	AF	LL	V
BE 71	14	30	M5	16	5	130	110	160	9.5	3.5	10	138	249	219	281	108	74	80	37
BE 80	19	40	M6	21.5	6	165	130	200	11.5		11.5	156	274	234	315	119			38
BE 90 S	24	50	M8	27	8							176	326	276	378	133	98	98	44
BE 90 L																			
BE 100	28	60	M10	31		215	180	250	14	4	14	195	367	307	429	142			50
BE 112											15	219	385	325	448	157			52
BE 132 S	38	80	M12	41	10	265	230	300			20	258	493	413	576	193	118	118	58
BE 132 MA																			
BE 132 MB													528	448	611				
BE 160 M	42 38(1)	110 80(1)	M16 M12(1)	45 41(1)	12 10(1)	300	250	350	18.5	5	15	310	596	486	680	245	187	187	51
BE 160 L													640	530	724				
BE 180 M	48 42(1)	110 110(1)	M16 M16(1)	51.5 45(1)	14 12(1)						18	348	708	598	823	261			52
BE 180 L																			

注意:
1）这些是电机尾轴的数值

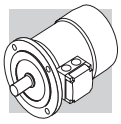

ME

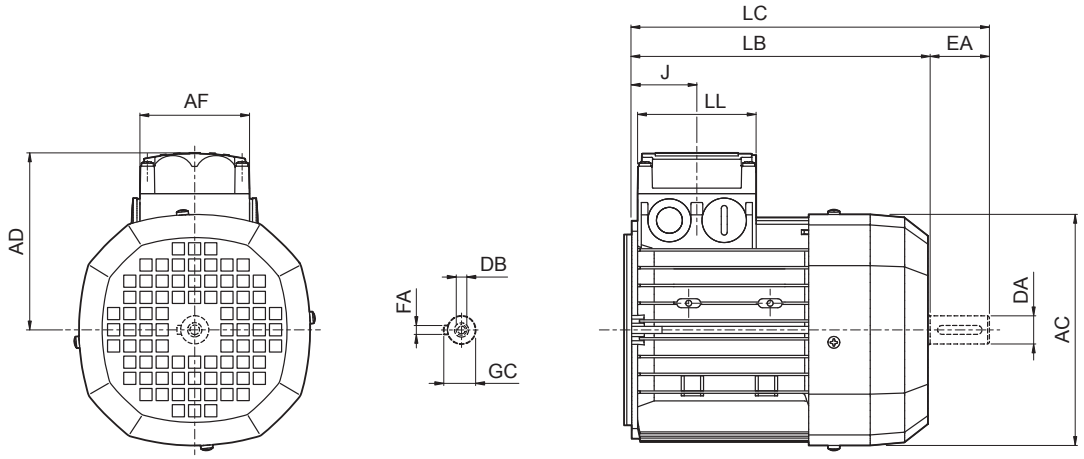

	电机尾轴					电机						
	DA	**EA**	**DB**	**FA**	**GC**	**AC**	**LB**	**LC**	**AF**	**LL**	**J**	**AD**
ME 2S	19	40	M6	6	21.5	156	202	245	74	80	44	119
ME 3S	28	60	M10	8	31	195	230	293	98	98	53.5	142
ME 3L							262	325				
ME 4S	38	80	M12	10	41	258	361	444	118	118	64.5	193
ME 4L												
ME 4LB							396	479				
ME 5S						310	418	502	187	187	77	245
ME 5L							462	546				

2P — 3000 min^{-1} - S1 — 50 Hz

															直流制动器						交流制动器				
															FD						FA				
P_n kW		n min^{-1}	M_n Nm	IE1	η (100%) %	η (75%) %	η (50%) %	cosφ	In 400V A	Is / In	Ms / Mn	Ma / Mn	J_m x 10^{-4} kgm^2	IM B5 Kg	Mod	Mb Nm	Z_o 1/h NB	Z_o 1/h SB	J_m x 10^{-4} kgm^2	IM B5 Kg	Mod	Mb Nm	Z_o 1/h	J_m x 10^{-4} kgm^2	IM B5 Kg
0.18	BN 63A 2	2730	0.63	○	59.9	56.9	51.9	0.77	0.56	3.0	2.1	2.0	2.0	3.5	FD 02	1.75	3900	4800	2.6	5.2	FA 02	1.75	4800	2.6	5.0
0.25	BN 63B 2	2740	0.87	○	66.0	64.8	64.8	0.76	0.72	3.3	2.3	2.3	2.3	3.9	FD 02	1.75	3900	4800	3.0	5.6	FA 02	1.75	4800	3.0	5.4
0.37	BN 63C 2	2800	1.26	○	69.1	66.8	66.8	0.78	0.99	3.9	2.6	2.6	3.3	5.1	FD 02	3.5	3600	4500	3.9	6.8	FA 02	3.5	4500	3.9	6.6
0.37	BN 71A 2	2820	1.25	○	73.8	73.0	70.6	0.76	0.95	4.8	2.8	2.6	3.5	5.4	FD 03	3.5	3000	4100	4.6	8.1	FA 03	3.5	4200	4.6	7.8
0.55	BN 71B 2	2820	1.86	○	76.0	75.8	74.8	0.76	1.37	5.0	2.9	2.8	4.1	6.2	FD 03	5	2900	4200	5.3	8.9	FA 03	5	4200	5.3	8.6
0.75	BN 71C 2	2810	2.6	○	76.6	76.2	76.2	0.76	1.86	5.1	3.1	2.8	5.0	7.3	FD 03	5	1900	3300	6.1	10.0	FA 03	5	3600	6.1	9.7
0.75	BN 80A 2	2810	2.6	•	76.2	75.5	68.3	0.81	1.75	4.8	2.6	2.2	7.8	8.6	FD 04	5	1700	3200	9.4	12.5	FA 04	5	3200	9.4	12.4
1.1	BN 80B 2	2800	3.8	•	76.4	76.2	75.0	0.81	2.57	4.8	2.8	2.4	9.0	9.5	FD 04	10	1500	3000	10.6	13.4	FA 04	10	3000	10.6	13.3
1.5	BN 80C 2	2800	5.1	•	79.1	79.5	77.2	0.81	3.4	4.9	2.7	2.4	11.4	11.3	FD 04	15	1300	2600	13.0	15.2	FA 04	15	2600	13.0	15.1
1.5	BN 90SA 2	2870	5.0	•	82.0	81.5	78.1	0.80	3.4	5.9	2.7	2.6	12.5	12.3	FD 14	15	900	2200	14.1	16.5	FA 14	15	2200	14.1	16.4
1.85	BN 90SB 2	2880	6.1	•	82.5	82.0	75.4	0.80	4.0	6.2	2.9	2.6	16.7	14	FD 14	15	900	2200	18.3	18.2	FA 14	15	2200	18.3	18.1
2.2	BN 90L 2	2880	7.3	•	82.7	82.1	80.8	0.80	4.8	6.3	2.9	2.7	16.7	14	FD 05	26	900	2200	21	20	FA 05	26	2200	21	20.7
3	BN 100L 2	2860	10.0	•	81.5	81.3	77.4	0.79	6.7	5.6	2.6	2.2	31	20	FD 15	26	700	1600	35	26	FA 15	26	1600	35	27
4	BN 100LB 2	2870	13.3	•	83.1	83.0	77.8	0.80	8.7	5.8	2.7	2.5	39	23	FD 15	40	450	900	43	29	FA 15	40	1000	43	30
4	BN 112M 2	2900	13.2	•	85.5	84.5	83.0	0.82	8.2	6.9	3.0	2.9	57	28	FD 06S	40	—	950	66	39	FA 06S	40	950	66	40
5.5	BN 132SA 2	2890	18.2	•	84.7	84.5	81.2	0.84	11.2	5.9	2.6	2.2	101	35	FD 06	50	—	600	112	48	FA 06	50	600	112	49
7.5	BN 132SB 2	2900	25	•	86.5	86.3	84.4	0.85	14.7	6.4	2.6	2.2	145	42	FD 06	50	—	550	154	55	FA 06	50	550	154	56
9.2	BN 132M 2	2930	30	•	87.0	86.5	83.6	0.86	17.7	6.7	2.8	2.3	178	53	FD 56	75	—	430	189	66	FA 06	75	430	189	67
11	BN 160MR 2	2920	36	•	87.6	87.0	86.0	0.88	20.6	6.9	2.9	2.5	210	65											
15	BN 160MB 2	2930	49	•	89.6	89.4	88.0	0.86	28.1	7.1	2.6	2.3	340	84											
18.5	BN 160L 2	2930	60	•	90.4	90.1	89.0	0.86	34	7.6	2.7	2.3	420	97											
22	BN 180M 2	2930	72	•	89.9	89.7	89.5	0.88	40	7.8	2.6	2.4	490	109											
30	BN 200LA 2	2930	98	•	90.7	90.1	87.6	0.89	54	7.8	2.7	2.9	770	140											

○ = n.a. • = IE1

4P — **1500 min^{-1} - S1** — **50 Hz**

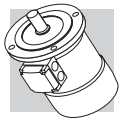

																直流制动器						交流制动器				
																FD						FA				
P_n kW		n min^{-1}	M_n Nm	IE1	η (100%) %	η (75%) %	η (50%) %	cosφ	In 400V A	Is / In	Ms / Mn	Ma / Mn	J_m x 10^{-4} kgm^2	IM B5 Kg	Mod	Mb Nm	Z_o 1/h NB	Z_o 1/h SB	J_m x 10^{-4} kgm^2	IM B5 Kg	Mod	Mb Nm	Z_o 1/h	J_m x 10^{-4} kgm^2	IM B5 Kg
0.06	**BN 56A** 4	1340	0.43	○	46.8	44.2	41.3	0.65	0.28	2.6	2.3	2.0	1.5	3.1												
0.09	**BN 56B** 4	1350	0.64	○	51.7	47.6	42.9	0.60	0.42	2.6	2.5	2.4	1.5	3.1												
0.12	**BN 63A** 4	1350	0.85	○	59.8	56.2	47.0	0.62	0.47	2.6	1.9	1.8	2.0	3.5	**FD 02**	1.75	10000	13000	2.6	5.2	**FA 02**	1.75	13000	2.6	5.0
0.18	**BN 63B** 4	1320	1.30	○	54.8	52.9	52.5	0.67	0.71	2.6	2.2	2.0	2.3	3.9	**FD 02**	3.5	10000	13000	3.0	5.6	**FA 02**	3.5	13000	3.0	5.4
0.25	**BN 63C** 4	1340	1.78	○	65.3	65.0	57.9	0.69	0.80	2.7	2.1	1.9	3.3	5.1	**FD 02**	3.5	7800	10000	3.9	6.8	**FA 02**	3.5	10000	3.9	6.6
0.25	**BN 71A** 4	1380	1.73	○	63.7	62.2	59.1	0.73	0.78	3.3	1.9	1.7	5.8	5.1	**FD 03**	3.5	7700	11000	6.9	7.8	**FA 03**	3.5	11000	6.9	7.5
0.37	**BN 71B** 4	1370	2.6	○	66.8	66.7	63.0	0.76	1.05	3.7	2.0	1.9	6.9	5.9	**FD 03**	5	6000	9400	8.0	8.6	**FA 03**	5.0	9400	8.0	8.3
0.55	**BN 71C** 4	1380	3.8	○	69.0	68.9	68.8	0.74	1.55	4.1	2.3	2.3	9.1	7.3	**FD 53**	7.5	4300	8700	10.2	10.0	**FA 03**	7.5	8700	10.2	9.7
0.55	**BN 80A** 4	1390	3.8	○	72.0	71.3	69.7	0.77	1.43	4.1	2.3	2.0	15	8.2	**FD 04**	10	4100	8000	16.6	12.1	**FA 04**	10	8000	16.6	12.0
0.75	**BN 80B** 4	1400	5.1	•	75.0	74.5	69.3	0.78	1.85	4.9	2.7	2.5	20	9.9	**FD 04**	15	4100	7800	22	13.8	**FA 04**	15	7800	22	13.7
1.1	**BN 80C** 4	1400	7.5	•	75.5	76.2	70.4	0.78	2.7	5.1	2.8	2.5	25	11.3	**FD 04**	15	2600	5300	27	15.2	**FA 04**	15	5300	27	15.1
1.1	**BN 90S** 4	1390	7.6	•	76.5	76.2	72.2	0.77	2.70	4.6	2.6	2.2	21	12.2	**FD 14**	15	4800	8000	23	16.4	**FA 14**	15	8000	23	16.3
1.5	**BN 90LA** 4	1410	10.2	•	78.7	78.5	74.9	0.77	3.6	5.3	2.8	2.4	28	13.6	**FD 05**	26	3400	6000	32	19.6	**FA 05**	26	6000	32	20.3
1.85	**BN 90LB** 4	1390	12.7	•	78.6	78.9	77.2	0.79	4.3	5.1	2.8	2.6	30	15.1	**FD 05**	26	3200	5900	34	21.1	**FA 05**	26	5900	34	21.8
2.2	**BN 100LA** 4	1410	14.9	•	81.1	81.4	79.9	0.75	5.2	4.5	2.2	2.0	40	18	**FD 15**	40	2600	4700	44	25	**FA 15**	40	4700	44	25
3	**BN 100LB** 4	1410	20	•	82.6	83.8	83.7	0.77	6.8	5.0	2.3	2.2	54	22	**FD 15**	40	2400	4400	58	28	**FA 15**	40	4400	58	29
4	**BN 112M** 4	1430	27	•	84.4	84.2	81.6	0.81	8.4	5.6	2.7	2.5	98	30	**FD 06S**	60	—	1400	107	40	**FA 06S**	60	2100	107	42
5.5	**BN 132S** 4	1440	36	•	84.7	84.8	82.5	0.81	11.6	5.5	2.3	2.2	213	44	**FD 56**	75	—	1050	223	57	**FA 06**	75	1200	223	58
7.5	**BN 132MA** 4	1440	50	•	86.0	86.3	85.3	0.81	15.5	5.7	2.5	2.4	270	53	**FD 06**	100	—	950	280	66	**FA 07**	100	1000	280	71
9.2	**BN 132MB** 4	1440	61	•	88.4	88.6	87.5	0.81	18.8	5.9	2.7	2.5	319	59	**FD 07**	150	—	900	342	75	**FA 07**	150	900	342	77
11	**BN 160MR** 4	1440	73	•	87.6	87.8	86.0	0.81	22.4	6.0	2.7	2.5	360	70	**FD 07**	150	—	850	382	86	**FA 07**	150	850	382	88
15	**BN 160L** 4	1460	98	•	88.7	88.5	88.4	0.81	30	6.0	2.3	2.1	650	99	**FD 08**	200	—	750	725	129	**FA 08**	200	750	710	128
18.5	**BN 180M** 4	1460	121	•	89.3	89.5	89.2	0.81	37	6.2	2.6	2.5	790	115	**FD 08**	250	—	700	865	145	**FA 08**	250	700	850	144
22	**BN 180L** 4	1460	144	•	89.9	90.0	90.0	0.80	44	6.4	2.5	2.5	1250	135	**FD 09**	300	—	400	1450	175					
30	**BN 200L** 4	1460	196	•	91.4	91.7	91.0	0.80	59	7.1	2.7	2.8	1650	157	**FD 09**	400	—	300	1850	197					

○ = n.a. • = IE1

6P — 1000 min^{-1} - S1 — 50 Hz

															直流制动器						交流制动器				
															FD						FA				
P_n kW		n min^{-1}	M_n Nm	IE1	η (100%) %	η (75%) %	η (50%) %	cosφ	In 400V A	Is / In	Ms / Mn	Ma / Mn	J_m x 10^{-4} kgm^2	IM B5 Kg	Mod	Mb Nm	Z_o 1/h NB	Z_o 1/h SB	J_m x 10^{-4} kgm^2	IM B5 Kg	Mod	Mb Nm	Z_o 1/h	J_m x 10^{-4} kgm^2	IM B5 Kg
0.09	**BN 63A 6**	880	0.98	○	41.0	41.0	32.9	0.53	0.60	2.1	2.1	1.8	3.4	4.6	**FD 02**	3.5	9000	14000	4.0	6.3	**FA 02**	3.5	14000	4.0	6.1
0.12	**BN 63B 6**	870	1.32	○	45.0	44.0	41.8	0.60	0.64	2.1	1.9	1.7	3.7	4.9	**FD 02**	3.5	9000	14000	4.3	6.6	**FA 02**	3.5	14000	4.3	6.4
0.18	**BN 71A 6**	900	1.91	○	55.0	55.5	51.0	0.69	0.68	2.6	1.9	1.7	8.4	5.5	**FD 03**	5	8100	13500	9.5	8.2	**FA 03**	5.0	13500	9.5	7.9
0.25	**BN 71B 6**	900	2.70	○	62.0	58.5	51.4	0.71	0.82	2.6	1.9	1.7	10.9	6.7	**FD 03**	5	7800	13000	12	9.4	**FA 03**	5.0	13000	12	9.1
0.37	**BN 71C 6**	910	3.9	○	66.0	60.0	53.3	0.69	1.17	3.0	2.4	2.0	12.9	7.7	**FD 53**	7.5	5100	9500	14	10.4	**FA 03**	7.5	9500	14	10.1
0.37	**BN 80A 6**	910	3.9	○	68.0	67.4	63.3	0.68	1.15	3.2	2.2	2.0	21	9.9	**FD 04**	10	5200	8500	23	13.8	**FA 04**	10	8500	23	13.7
0.55	**BN 80B 6**	920	5.7	○	70.0	69.8	64.3	0.68	1.67	3.9	2.6	2.2	25	11.3	**FD 04**	15	4800	7200	27	15.2	**FA 04**	15	7200	27	15.1
0.75	**BN 80C 6**	920	7.8	•	70.0	70.0	64.4	0.65	2.38	3.8	2.5	2.2	28	12.2	**FD 04**	15	3400	6400	30	16.1	**FA 04**	15	6400	30	16.0
0.75	**BN 90S 6**	920	7.8	•	70.0	69.0	64.2	0.68	2.27	3.8	2.4	2.2	26	12.6	**FD 14**	15	3400	6500	28	16.8	**FA 14**	15	6500	28	16.7
1.1	**BN 90L 6**	920	11.4	•	72.9	72.6	69.1	0.69	3.2	3.9	2.3	2.0	33	15	**FD 05**	26	2700	5000	37	21	**FA 05**	26	5000	37	22
1.5	**BN 100LA 6**	940	15.2	•	75.2	74.2	70.3	0.72	4.0	4.1	2.1	2.0	82	22	**FD 15**	40	1900	4100	86	28	**FA 15**	40	4100	86	29
1.85	**BN 100LB 6**	930	19.0	•	76.6	72.8	62.6	0.73	4.8	4.6	2.1	2.0	95	24	**FD 15**	40	1700	3600	99	30	**FA 15**	40	3600	99	31
2.2	**BN 112M 6**	940	22	•	78.5	79.0	76.5	0.73	5.5	4.8	2.2	2.0	168	32	**FD 06S**	60	—	2100	177	42	**FA 06S**	60	2100	177	44
3	**BN 132S 6**	940	30	•	79.7	77.0	75.1	0.76	7.1	5.1	1.9	1.8	216	36	**FD 56**	75	—	1400	226	49	**FA 06**	75	1400	226	50
4	**BN 132MA 6**	950	40	•	81.4	81.5	79.5	0.77	9.2	5.5	2.0	1.8	295	45	**FD 06**	100	—	1200	305	58	**FA 07**	100	1200	318	63
5.5	**BN 132MB 6**	945	56	•	83.1	80.9	79.1	0.78	12.2	6.1	2.1	1.9	383	56	**FD 07**	150	—	1050	406	72	**FA 07**	150	1050	406	74
7.5	**BN 160M 6**	955	75	•	85.0	85.0	84.8	0.81	15.7	5.9	2.2	2.0	740	83	**FD 08**	170	—	900	815	112	**FA 08**	170	900	815	113
11	**BN 160L 6**	960	109	•	86.4	86.5	85.9	0.81	22.7	6.6	2.5	2.3	970	103	**FD 08**	200	—	800	1045	133	**FA 08**	200	800	1045	133
15	**BN 180L 6**	970	148	•	87.7	88.0	87.3	0.82	30	6.2	2.0	2.4	1550	130	**FD 09**	300	—	600	1750	170					
18.5	**BN 200LA 6**	960	184	•	88.6	88.0	87.3	0.81	37	5.9	2.0	2.3	1700	145	**FD 09**	400	—	450	1900	185					

○ = n.a. • = IE1

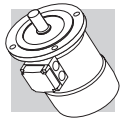

8P — 750 min^{-1} - S1 — 50 Hz

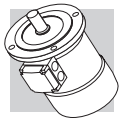

													直流制动器						交流制动器					
													FD						FA					
P_n kW			n min^{-1}	M_n Nm	η %	cosφ	In 400V A	Is/In	Ms/Mn	Ma/Mn	J_m x 10^{-4} kgm^2	IM B5 Kg	Mod	Mb Nm	Z_o 1/h NB	Z_o 1/h SB	J_m x 10^{-4} kgm^2	IM B5 Kg	Mod	Mb Nm	Z_o 1/h	J_m x 10^{-4} kgm^2	IM B5 Kg
0.09	**BN 71A**	**8**	680	1.26	47	0.59	0.47	2.3	2.4	2.3	10.9	6.7	**FD 03**	3.5	9000	16000	12.0	9.4	**FA 03**	3.5	16000	12.0	9.1
0.12	**BN 71B**	**8**	680	1.69	51	0.59	0.58	2.1	2.3	2.2	12.9	7.7	**FD 03**	5.0	9000	16000	14.0	10.4	**FA 03**	5.0	16000	14.0	10.1
0.18	**BN 80A**	**8**	690	2.49	51	0.60	0.85	2.4	2.2	2.2	15	8.2	**FD 04**	5.0	6500	11000	16.6	12.1	**FA 04**	5.0	11000	16.6	12.0
0.25	**BN 80B**	**8**	680	3.51	54	0.63	1.06	2.4	2.0	1.9	20	9.9	**FD 04**	10.0	6000	10000	22	13.8	**FA 04**	10.0	10000	23	13.7
0.37	**BN 90S**	**8**	675	5.2	58	0.60	1.53	2.6	2.3	2.1	26	12.6	**FD 14**	15.0	4800	7500	28	16.8	**FA 14**	15.0	7500	28	16.7
0.55	**BN 90L**	**8**	670	7.8	62	0.60	2.13	2.6	2.2	2.0	33	15	**FD 05**	26	4000	6400	37	21	**FA 05**	26	6400	37	22
0.75	**BN 100LA**	**8**	700	10.2	68	0.63	2.53	3.4	1.9	1.7	82	22	**FD 15**	26	2800	4800	86	28	**FA 15**	26	4800	86	29
1.1	**BN 100LB**	**8**	700	15.0	68	0.64	3.65	3.2	1.7	1.7	95	24	**FD 15**	40	2500	4000	99	30	**FA 15**	40	4000	99	31
1.5	**BN 112M**	**8**	710	20.2	71	0.66	4.6	3.7	1.8	1.9	168	32	**FD 06S**	60	—	3000	177	42	**FA 06S**	60	3000	177	44
2.2	**BN 132S**	**8**	710	29.6	75	0.66	6.4	3.8	1.8	2.0	295	45	**FD 56**	75	—	2300	305	58	**FA 06**	75	2300	305	56
3	**BN 132MA**	**8**	710	40.4	76	0.69	8.3	3.9	1.6	1.8	370	53	**FD 06**	100	—	1900	394	69	**FA 07**	100	1900	406	74

2/4P — 3000/1500 min^{-1} - S1 — 50 Hz

													直流制动器						交流制动器				
													FD						FA				
P_n kW			n min^{-1}	M_n Nm	η %	cosφ	In 400V A	Is/In	Ms/Mn	Ma/Mn	J_m x 10^{-4} kgm^2	IM B5 Kg	Mod	Mb Nm	Z_o 1/h NB	Z_o 1/h SB	J_m x 10^{-4} kgm^2	IM B5 Kg	Mod	Mb Nm	Z_o 1/h	J_m x 10^{-4} kgm^2	IM B5 Kg
0.20	**BN 63B**	**2**	2700	0.71	55	0.82	0.64	3.5	2.1	1.9	2.9	4.4	**FD 02**	3.5	2200	2600	3.5	6.1	**FA 02**	3.5	2600	3.5	5.9
0.15		**4**	1350	1.06	49	0.67	0.66	2.6	1.8	1.7					4000	5100					5100		
0.28	**BN 71A**	**2**	2700	0.99	56	0.82	0.88	2.9	1.9	1.7	4.7	4.4	**FD 03**	3.5	2100	2400	5.8	7.1	**FA 03**	3.5	2400	5.8	6.8
0.20		**4**	1370	1.39	59	0.72	0.68	3.1	1.8	1.7					3800	4800					4800		
0.37	**BN 71B**	**2**	2740	1.29	56	0.82	1.16	3.5	1.8	1.8	5.8	5.1	**FD 03**	5.0	1400	2100	6.9	7.8	**FA 03**	5.0	2100	6.9	7.5
0.25		**4**	1390	1.72	60	0.73	0.82	3.3	2.0	1.9					2900	4200					4200		
0.45	**BN 71C**	**2**	2780	1.55	63	0.85	1.21	3.8	1.8	1.8	6.9	5.9	**FD 03**	5.0	1400	2100	8.0	8.6	**FA 03**	5.0	2100	8.0	8.3
0.30		**4**	1400	2.0	63	0.73	0.94	3.6	2.0	1.9					2900	4200					4200		
0.55	**BN 80A**	**2**	2800	1.9	63	0.85	1.48	3.9	1.7	1.7	15	8.2	**FD 04**	5.0	1600	2300	17	12.1	**FA 04**	5.0	2300	16.6	12.0
0.37		**4**	1400	2.5	67	0.79	1.01	4.1	1.8	1.9					3000	4000					4000		
0.75	**BN 80B**	**2**	2780	2.6	65	0.85	1.96	3.8	1.9	1.8	20	9.9	**FD 04**	10	1400	1600	22	13.8	**FA 04**	10	1600	22	13.7
0.55		**4**	1400	3.8	68	0.81	1.44	3.9	1.7	1.7					2700	3600					3600		
1.1	**BN 90S**	**2**	2790	3.8	71	0.82	2.73	4.7	2.3	2.0	21	12.2	**FD 14**	10	1500	1600	23	16.4	**FA 14**	10	1600	23	16.3
0.75		**4**	1390	5.2	66	0.79	2.08	4.6	2.4	2.2					2300	2800					2800		
1.5	**BN 90L**	**2**	2780	5.2	70	0.85	3.64	4.5	2.4	2.1	28	14.0	**FD 05**	26	1050	1200	32	20	**FA 05**	26	1200	32	21
1.1		**4**	1390	7.6	73	0.81	2.69	4.7	2.5	2.2					1600	2000					2000		
2.2	**BN 100LA**	**2**	2800	7.5	72	0.85	5.2	4.5	2.0	1.9	40	18.3	**FD 15**	26	600	900	44	25	**FA 15**	26	900	44	25
1.5		**4**	1410	10.2	73	0.79	3.8	4.7	2.0	2.0					1300	2300					2300		
3.5	**BN 100LB**	**2**	2850	11.7	80	0.84	7.5	5.4	2.2	2.1	61	25	**FD 15**	40	500	900	65	31	**FA 15**	40	900	65	32
2.5		**4**	1420	16.8	82	0.80	5.5	5.2	2.2	2.2					1000	2100					2100		
4	**BN 112M**	**2**	2880	13.3	79	0.83	8.8	6.1	2.4	2.0	98	30	**FD 06S**	60	—	700	107	40	**FA 06S**	60	700	107	42
3.3		**4**	1420	22.2	80	0.80	7.4	5.1	2.1	2.0					—	1200					1200		
5.5	**BN 132S**	**2**	2890	18.2	80	0.87	11.4	5.9	2.4	2.0	213	44	**FD 56**	75	—	350	223	57	**FA 06**	75	350	223	58
4.4		**4**	1440	29	82	0.84	9.2	5.3	2.2	2.0					—	900					900		
7.5	**BN 132MA**	**2**	2900	25	82	0.87	15.2	6.5	2.4	2.0	270	53	**FD 06**	100	—	350	280	66	**FA 07**	100	350	293	71
6		**4**	1430	40	84	0.85	12.1	5.8	2.3	2.1					—	900					900		
9.2	**BN 132MB**	**2**	2920	30	83	0.86	18.6	6.0	2.6	2.2	319	59	**FD 07**	150	—	300	342	75	**FA 07**	150	300	342	77
7.3		**4**	1440	48	85	0.85	14.6	5.5	2.3	2.1					—	800					800		

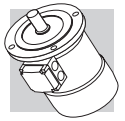

2/6P — **3000/1000 min^{-1}** - S3 60/40% — **50 Hz**

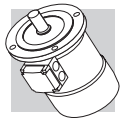

													直流制动器						交流制动器				
													FD						FA				
P_n kW			n min^{-1}	M_n Nm	η %	cosφ	In 400V A	Is / In	Ms / Mn	Ma / Mn	J_m x 10^{-4} kgm^2	IM B5 Kg	Mod	Mb Nm	Z_o 1/h NB	Z_o 1/h SB	J_m x 10^{-4} kgm^2	IM B5 Kg	Mod	Mb Nm	Z_o 1/h	J_m x 10^{-4} kgm^2	IM B5 Kg
0.25	**BN 71A**	**2**	2850	0.84	60	0.82	0.73	4.3	1.9	1.8	6.9	5.9	**FD 03**	1.75	1500	1700	8.0	8.6	**FA 03**	2.5	1700	8.0	8.3
0.08		**6**	910	0.84	43	0.70	0.38	2.1	1.4	1.5					10000	13000					13000		
0.37	**BN 71B**	**2**	2880	1.23	62	0.80	1.08	4.4	1.9	1.8	9.1	7.3	**FD 03**	3.5	1000	1300	10.2	10.0	**FA 03**	3.5	1300	10.2	9.7
0.12		**6**	900	1.27	44	0.73	0.54	2.4	1.4	1.5					9000	11000					11000		
0.55	**BN 80A**	**2**	2800	1.88	63	0.86	1.47	4.5	1.9	1.7	20	9.9	**FD 04**	5.0	1500	1800	22	13.8	**FA 04**	5.0	1800	22	13.7
0.18		**6**	930	1.85	52	0.65	0.77	3.3	2.0	1.9					4100	6300					6300		
0.75	**BN 80B**	**2**	2800	2.6	66	0.87	1.89	4.3	1.8	1.6	25	11.3	**FD 04**	5.0	1700	1900	27	15.2	**FA 04**	5.0	1900	27	15.1
0.25		**6**	930	2.6	54	0.67	1.00	3.2	1.7	1.8					3800	6000					6000		
1.10	**BN 90L**	**2**	2860	3.7	67	0.84	2.82	4.7	2.1	1.9	28	14.0	**FD 05**	13	1400	1600	32	20	**FA 05**	13	1600	32	21
0.37		**6**	920	3.8	59	0.71	1.27	3.3	1.6	1.6					3400	5200					5200		
1.5	**BN 100LA**	**2**	2880	5	73	0.84	3.53	5.1	1.9	2.0	40	18.3	**FD 15**	13	1000	1200	44	24	**FA 15**	13	1200	44	25
0.55		**6**	940	5.6	64	0.67	1.85	3.5	1.7	1.8					2900	4000					4000		
2.2	**BN 100LB**	**2**	2900	7.2	77	0.85	4.9	5.9	2.0	2.0	61	25	**FD 15**	26	700	900	65	31	**FA 15**	26	900	65	32
0.75		**6**	950	7.5	67	0.64	2.5	3.3	1.9	1.8					2100	3000					3000		
3	**BN 112M**	**2**	2900	9.9	78	0.87	6.4	6.3	2.0	2.1	98	30	**FD 06S**	40	—	1000	107	40	**FA 06S**	40	1000	107	32
1.1		**6**	950	11.1	72	0.64	3.4	3.9	1.8	1.8					—	2600					2600		
4.5	**BN 132S**	**2**	2910	14.8	78	0.84	9.9	5.8	1.9	1.8	213	44	**FD 56**	37	—	500	223	57	**FA 06**	37	500	223	58
1.5		**6**	960	14.9	74	0.67	4.4	4.2	1.9	2.0					—	2100					2100		
5.5	**BN 132M**	**2**	2920	18.0	78	0.87	11.7	6.2	2.1	1.9	270	53	**FD 56**	50	—	400	280	66	**FA 06**	50	400	280	67
2.2		**6**	960	22	77	0.71	5.8	4.3	2.1	2.0					—	1900					1900		

2/8P — 3000/750 min^{-1} - S3 60/40% — 50 Hz

												直流制动器						交流制动器				
												FD						FA				
P_n kW		n min^{-1}	M_n Nm	η %	cosφ	In 400V A	Is/In	Ms/Mn	Ma/Mn	J_m x 10^{-4} kgm^2	IM B5 Kg	Mod	Mb Nm	Z_o 1/h NB	Z_o 1/h SB	J_m x 10^{-4} kgm^2	IM B5 Kg	Mod	Mb Nm	Z_o 1/h	J_m x 10^{-4} kgm^2	IM B5 Kg
0.25	**BN 71A** **2**	2790	0.86	61	0.87	0.68	3.9	1.8	1.9	10.9	6.7	**FD 03**	1.75	1300	1400	12	9.4	**FA 03**	2.5	1400	12	9.1
0.06	**8**	680	0.84	31	0.61	0.46	2.0	1.8	1.9					10000	13000					13000		
0.37	**BN 71B** **2**	2800	1.26	63	0.86	0.99	3.9	1.8	1.9	12.9	7.7	**FD 03**	3.5	1200	1300	14	10.4	**FA 03**	3.5	1300	14	10.1
0.09	**8**	670	1.28	34	0.75	0.51	1.8	1.4	1.5					9500	13000					13000		
0.55	**BN 80A** **2**	2830	1.86	66	0.86	1.40	4.4	2.1	2.0	20	9.9	**FD 04**	5.0	1500	1800	22	13.8	**FA 04**	5.0	1800	22	13.7
0.13	**8**	690	1.80	41	0.64	0.72	2.3	1.6	1.7					5600	8000					8000		
0.75	**BN 80B** **2**	2800	2.6	68	0.88	1.81	4.6	2.1	2.0	25	11.3	**FD 04**	10	1700	1900	27	15.2	**FA 04**	10	1900	27	15.1
0.18	**8**	690	2.5	43	0.66	0.92	2.3	1.6	1.7					4800	7300					7300		
1.10	**BN 90L** **2**	2830	3.7	63	0.84	3.00	4.5	2.1	1.9	28	14.0	**FD 05**	13	1400	1600	32	20	**FA 05**	13	1600	32	21
0.28	**8**	690	3.9	48	0.63	1.34	2.4	1.8	1.9					3400	5100					5100		
1.5	**BN 100LA** **2**	2880	5.0	69	0.85	3.69	4.7	1.9	1.8	40	18.3	**FD 15**	13	1000	1200	44	25	**FA 15**	13	1200	44	25
0.37	**8**	690	5.1	46	0.63	1.84	2.1	1.6	1.6					3300	5000					5000		
2.4	**BN 100LB** **2**	2900	7.9	75	0.82	5.6	5.4	2.1	2.0	61	25	**FD 15**	26	550	700	65	31	**FA 15**	26	700	65	32
0.55	**8**	700	7.5	54	0.58	2.5	2.6	1.8	1.8					2000	3500					3500		
3	**BN 112M** **2**	2900	9.9	76	0.87	6.5	6.3	2.1	1.9	98	30	**FD 06S**	40	—	900	107	40	**FA 06S**	40	900	107	42
0.75	**8**	690	10.4	60	0.65	2.8	2.5	1.6	1.6					—	2900					2900		
4	**BN 132S** **2**	2870	13.3	73	0.84	9.4	5.6	2.3	2.4	213	44	**FD 56**	37	—	500	223	57	**FA 06**	37	500	223	58
1	**8**	690	13.8	66	0.62	3.5	2.9	1.9	1.8					—	3500					3500		
5.5	**BN 132M** **2**	2870	18.3	75	0.84	12.6	6.1	2.4	2.5	270	53	**FD 06**	50	—	400	280	66	**FA 06**	50	400	280	67
1.5	**8**	690	21	68	0.63	5.1	2.9	1.9	1.9					—	2400					2400		

2/12P — **3000/500 min^{-1}** - S3 60/40% — **50 Hz**

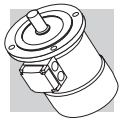

													直流制动器						交流制动器				
													FD						FA				
P_n kW			n min^{-1}	M_n Nm	η %	cosφ	In 400V A	Is/In	Ms/Mn	Ma/Mn	J_m x 10^{-4} kgm^2	IM B5 Kg	Mod	Mb Nm	Z_o 1/h NB	Z_o 1/h SB	J_m x 10^{-4} kgm^2	IM B5 Kg	Mod	Mb Nm	Z_o 1/h	J_m x 10^{-4} kgm^2	IM B5 Kg
0.55	**BN 80B**	**2**	2820	1.86	64	0.89	1.39	4.2	1.6	1.7	25	11.3	**FD 04**	5.0	1000	1300	27	15.2	**FA 04**	5.0	1300	27	15.1
0.09		**12**	430	2.0	30	0.63	0.69	1.8	1.9	1.8					8000	12000					12000		
0.75	**BN 90L**	**2**	2790	2.6	56	0.89	2.17	4.2	1.8	1.7	26	12.6	**FD 05**	13	1000	1150	30	18.6	**FA 05**	13	1150	30	19.3
0.12		**12**	430	2.7	26	0.63	1.06	1.7	1.4	1.6					4600	6300					6300		
1.10	**BN 100LA**	**2**	2850	3.7	65	0.85	2.87	4.5	1.6	1.8	40	18.3	**FD 15**	13	700	900	44	25	**FA 15**	13	900	44	25
0.18		**12**	430	4.0	26	0.54	1.85	1.5	1.3	1.5					4000	6000					6000		
1.5	**BN 100LB**	**2**	2900	4.9	67	0.86	3.76	5.6	1.9	1.9	54	22	**FD 15**	13	700	900	58	28	**FA 15**	13	900	58	29
0.25		**12**	440	5.4	36	0.46	2.18	1.8	1.7	1.8					3800	5000					5000		
2	**BN 112M**	**2**	2900	6.6	74	0.88	4.43	6.5	2.1	2.0	98	30	**FD 06S**	20	—	800	107	40	**FA 06S**	20	800	107	42
0.3		**12**	460	6.2	46	0.43	2.19	2.0	2.1	2.0					—	3400					3400		
3	**BN 132S**	**2**	2920	9.8	74	0.87	6.7	6.8	2.3	1.9	213	44	**FD 56**	37	—	450	223	57	**FA 06**	37	450	223	58
0.5		**12**	470	10.2	51	0.43	3.3	2.0	1.7	1.6					—	3000					3000		
4	**BN 132M**	**2**	2920	13.1	75	0.89	8.6	5.9	2.4	2.3	270	53	**FD 56**	37	—	400	280	66	**FA 06**	37	400	280	67
0.7		**12**	460	14.5	53	0.44	4.3	1.9	1.7	1.6					—	2800					2800		

4/6P — 1500/1000 min^{-1} - S1 — 50 Hz

													直流制动器						交流制动器				
													FD						FA				
P_n kW			n min^{-1}	M_n Nm	η %	cosφ	In 400V A	Is/In	Ms/Mn	Ma/Mn	J_m x 10^{-4} kgm^2	IM B5 Kg	Mod	Mb Nm	Z_o 1/h NB	Z_o 1/h SB	J_m x 10^{-4} kgm^2	IM B5 Kg	Mod	Mb Nm	Z_o 1/h	J_m x 10^{-4} kgm^2	IM B5 Kg
0.22	**BN 71B**	**4**	1410	1.5	64	0.74	0.67	3.9	1.8	1.9	9.1	7.3	**FD 03**	3.5	2500	3500	10.2	10.0	**FA 03**	3.5	3500	10.2	9.7
0.13		**6**	920	1.4	43	0.67	0.65	2.3	1.6	1.7					5000	9000					9000		
0.30	**BN 80A**	**4**	1410	2.0	61	0.82	0.87	3.5	1.3	1.5	15	8.2	**FD 04**	5.0	2500	3100	16.6	12.1	**FA 04**	5.0	3100	16.6	12.0
0.20		**6**	930	2.1	54	0.66	0.81	3.2	1.9	2.0					4000	6000					6000		
0.40	**BN 80B**	**4**	1430	2.7	63	0.75	1.22	3.9	1.8	1.8	20	9.9	**FD 04**	10	1800	2300	22	13.8	**FA 04**	10	2300	22	13.7
0.26		**6**	930	2.7	55	0.70	0.97	2.7	1.5	1.6					3600	5500					5500		
0.55	**BN 90S**	**4**	1420	3.7	70	0.78	1.45	4.5	2.0	1.9	21	12.2	**FD 14**	10	1500	2100	23	16.1	**FA 14**	10	2100	23	16.3
0.33		**6**	930	3.4	62	0.70	1.10	3.7	2.3	2.0					2500	4100					4100		
0.75	**BN 90L**	**4**	1420	5.0	74	0.78	1.88	4.3	1.9	1.8	28	14	**FD 05**	13	1400	2000	32	20	**FA 05**	13	2000	32	21
0.45		**6**	920	4.7	66	0.71	1.39	3.3	2.0	1.9					2300	3600					3600		
1.1	**BN 100LA**	**4**	1450	7.2	74	0.79	2.72	5.0	1.7	1.9	82	22	**FD 15**	26	1400	2000	86	28	**FA 15**	26	2000	86	29
0.8		**6**	950	8.0	65	0.69	2.57	4.1	1.9	2.1					2100	3300					3300		
1.5	**BN 100LB**	**4**	1450	9.9	75	0.79	3.65	5.1	1.7	1.9	95	25	**FD 15**	26	1300	1800	99	31	**FA 15**	26	1800	99	32
1.1		**6**	950	11.1	72	0.68	3.24	4.3	2.0	2.1					2000	3000					3000		
2.3	**BN 112M**	**4**	1450	15.2	75	0.78	5.7	5.2	1.8	1.9	168	32	**FD 06S**	40	—	1600	177	42	**FA 06S**	40	1600	177	44
1.5		**6**	960	14.9	73	0.72	4.1	4.9	2.0	2.0					—	2400					2400		
3.1	**BN 132S**	**4**	1460	20	83	0.83	6.5	5.9	2.1	2.0	213	44	**FD 56**	37	—	1200	223	57	**FA 06**	37	1200	223	58
2		**6**	960	20	77	0.75	4.9	4.5	2.1	2.1					—	1900					1900		
4.2	**BN 132MA**	**4**	1460	27	84	0.82	8.8	5.9	2.1	2.2	270	53	**FD 06**	50	—	900	280	66	**FA 06**	50	900	280	67
2.6		**6**	960	26	79	0.72	6.6	4.3	2.0	2.0					—	1500					1500		

4/8P — 1500/750 min^{-1} - S1 — 50 Hz

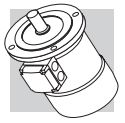

													直流制动器						交流制动器				
													FD						FA				
P_n kW			n min^{-1}	M_n Nm	η %	cosφ	In 400V A	Is/In	Ms/Mn	Ma/Mn	J_m x 10^{-4} kgm^2	IM B5 Kg	Mod	Mb Nm	Z_o 1/h NB	Z_o 1/h SB	J_m x 10^{-4} kgm^2	IM B5 Kg	Mod	Mb Nm	Z_o 1/h	J_m x 10^{-4} kgm^2	IM B5 Kg
0.37	**BN 80A**	**4**	1400	2.5	63	0.82	1.03	3.3	1.4	1.4	15	8.2	**FD 04**	10	2300	3500	16.6	12.1	**FA 04**	10	3500	16.6	12.0
0.18		**8**	690	2.5	44	0.60	0.98	2.2	1.5	1.6					4500	7000					7000		
0.55	**BN 80B**	**4**	1390	3.8	65	0.86	1.42	3.8	1.7	1.6	20	9.9	**FD 04**	10	2200	2900	22	13.8	**FA 04**	10	2900	22	13.7
0.30		**8**	670	4.3	49	0.65	1.36	2.3	1.7	1.8					4200	6500					6500		
0.65	**BN 90S**	**4**	1390	4.5	73	0.85	1.51	4.0	1.9	1.9	28	13.6	**FD 14**	15	2300	2800	30	17.8	**FA 14**	15	2800	30	17.7
0.35		**8**	690	4.8	49	0.57	1.81	2.5	2.1	2.2					3500	6000					6000		
0.9	**BN 90L**	**4**	1370	6.3	73	0.87	2.05	3.8	1.8	1.8	30	15.1	**FD 05**	26	1700	2100	34	21	**FA 05**	26	2100	34	22
0.5		**8**	670	7.1	57	0.62	2.04	2.4	2.1	2.0					2500	4200					4200		
1.30	**BN 100LA**	**4**	1420	8.7	72	0.83	3.14	4.3	1.7	1.8	82	22	**FD 15**	40	1300	1700	86	28	**FA 15**	40	1700	86	29
0.70		**8**	700	9.6	58	0.64	2.72	2.8	1.8	1.8					2000	3400					3400		
1.8	**BN 100LB**	**4**	1420	12.1	69	0.87	4.3	4.2	1.6	1.7	95	25	**FD 15**	40	1200	1700	99	31	**FA 15**	40	1700	99	32
0.9		**8**	700	12.3	62	0.63	3.3	3.2	1.7	1.8					1600	2600					2600		
2.2	**BN 112M**	**4**	1440	14.6	77	0.85	4.9	5.3	1.8	1.8	168	32	**FD 06S**	60	—	1200	177	42	**FA 06S**	60	1200	177	43
1.2		**8**	710	16.1	70	0.63	3.9	3.3	1.9	1.8					—	2000					2000		
3.6	**BN 132S**	**4**	1440	24	80	0.82	7.9	6.5	2.1	1.9	295	45	**FD 56**	75	—	1000	305	58	**FA 06**	75	1000	305	59
1.8		**8**	720	24	72	0.55	6.6	4.6	1.9	2.0					—	1400					1400		
4.6	**BN 132M**	**4**	1450	30	81	0.83	9.9	6.5	2.2	1.9	383	56	**FD 06**	100	—	1000	393	69	**FA 07**	100	1000	406	74
2.3		**8**	720	31	73	0.54	8.4	4.4	2.3	2.0					—	1300					1300		

2P — 3000 min^{-1} - S1 — 50 Hz

															直流制动器						交流制动器				
															FD						FA				
P_n kW		n min^{-1}	M_n Nm	IE1	η (100%) %	η (75%) %	η (50%) %	cosφ	In 400V A	Is/In	Ms/Mn	Ma/Mn	J_m x 10^{-4} kgm^2	IM B5 Kg	Mod	Mb Nm	Z_o 1/h NB	Z_o 1/h SB	J_m x 10^{-4} kgm^2	IM B5 Kg	Mod	Mb Nm	Z_o 1/h	J_m x 10^{-4} kgm^2	IM B5 Kg
0.18	M 05A	2	2730	0.63	○	59.9	56.9	51.9	0.77	0.56	3.0	2.1	2.0	2.0	3.2	FD 02	1.75	3900	4800	2.6	4.9	FA 02	1.75	4800	2.6	4.7
0.25	M 05B	2	2740	0.87	○	66.0	64.8	64.8	0.76	0.72	3.3	2.3	2.3	2.3	3.6	FD 02	1.75	3900	4800	3.0	5.3	FA 02	1.75	4800	3.0	5.1
0.37	M 05C	2	2800	1.26	○	69.1	66.8	66.8	0.78	0.99	3.9	2.6	2.6	3.3	4.8	FD 02	3.5	3600	4500	3.9	6.5	FA 02	3.5	4500	3.9	6.3
0.55	M 1SD	2	2820	1.86	○	76.0	75.8	74.8	0.76	1.37	5.0	2.9	2.8	4.1	5.8	FD 03	5	2900	4200	5.3	8.5	FA 03	5	4200	5.3	8.2
0.75	M 1LA	2	2810	2.6	○	76.6	76.2	76.2	0.76	1.86	5.1	3.1	2.8	5.0	6.9	FD 03	5	1900	3300	6.1	9.6	FA 03	5	3300	6.1	9.3
1.1	M 2SA	2	2800	3.8	•	76.4	76.2	75.0	0.81	2.57	4.8	2.8	2.4	9.0	8.8	FD 04	10	1500	3000	10.6	11.9	FA 04	10	3000	10.6	12.6
1.5	M 2SB	2	2800	5.1	•	79.1	79.5	77.2	0.81	3.4	4.9	2.7	2.4	11.4	10.6	FD 04	15	1300	2600	13.0	9.9	FA 04	15	2600	13.0	14.4
2.2	M 3SA	2	2880	7.3	•	82.7	82.1	81.0	0.80	4.8	6.3	2.9	2.7	24	15.5	FD 15	26	1100	2400	28	22	FA 15	26	2400	28	23
3	M 3LA	2	2860	10.0	•	81.5	81.3	77.4	0.79	6.7	5.6	2.6	2.2	31	18.7	FD 15	26	700	1600	35	25	FA 15	26	1600	35	26
4	M 3LB	2	2870	13.3	•	83.1	83.0	77.8	0.80	8.7	5.8	2.7	2.5	39	22	FD 15	40	450	900	43	28	FA 15	40	900	43	29
5.5	M 4SA	2	2890	18.2	•	84.7	84.5	81.2	0.84	11.2	5.9	2.6	2.2	101	33	FD 06	50	—	600	112	46	FA 06	50	600	112	47
7.5	M 4SB	2	2900	25	•	86.5	86.3	84.4	0.85	14.7	6.4	2.6	2.2	145	40	FD 06	50	—	550	154	53	FA 06	50	550	154	54
9.2	M 4LA	2	2930	30	•	87.0	86.5	83.6	0.86	17.7	6.7	2.8	2.3	178	51	FD 56	75	—	430	189	64	FA 06	75	430	189	65
11	M 4LC	2	2920	36	•	87.6	87.0	86.0	0.88	20.6	6.9	2.9	2.5	210	60											
15	M 5SB	2	2930	49	•	89.6	89.4	88.0	0.86	28.1	7.1	2.6	2.3	340	70											
18.5	M 5SC	2	2930	60	•	90.4	90.1	89.0	0.86	34	7.6	2.7	2.3	420	83											
22	M 5LA	2	2930	72	•	89.9	89.7	89.5	0.88	40	7.8	2.6	2.4	490	95											

○ = n.a. • = IE1

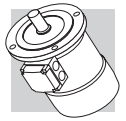

4P — 1500 min^{-1} - S1 — 50 Hz

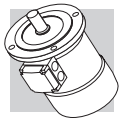

															直流制动器						交流制动器				
															FD						FA				
P_n kW		n min^{-1}	M_n Nm	IE1	η (100%) %	η (75%) %	η (50%) %	cosφ	In 400V A	Is / In	Ms / Mn	Ma / Mn	J_m x 10^{-4} kgm^2	IM B5 Kg	Mod	Mb Nm	Z_o 1/h NB	Z_o 1/h SB	J_m x 10^{-4} kgm^2	IM B5 Kg	Mod	Mb Nm	Z_o 1/h	J_m x 10^{-4} kgm^2	IM B5 Kg
0.09	M 0B 4	1350	0.64	○	51.7	47.6	42.9	0.60	0.42	2.6	2.5	2.4	1.5	2.9											
0.12	M 05A 4	1350	0.85	○	59.8	56.2	47.0	0.62	0.47	2.6	1.9	1.8	2.0	3.2	FD 02	1.75	10000	13000	2.6	4.9	FA 02	1.75	13000	2.6	4.7
0.18	M 05B 4	1320	1.30	○	54.8	52.9	52.5	0.67	0.71	2.6	2.2	2.0	2.3	3.6	FD 02	3.5	10000	13000	3.0	5.3	FA 02	3.5	13000	3.0	5.1
0.25	M 05C 4	1340	1.78	○	65.3	65.0	57.9	0.69	0.80	2.7	2.1	1.9	3.3	4.8	FD 02	3.5	7800	10000	3.9	6.5	FA 02	3.5	10000	3.9	6.3
0.37	M 1SD 4	1370	2.6	○	66.8	66.7	63.0	0.76	1.05	3.7	2.0	1.9	6.9	5.5	FD 03	5	6000	9400	8.0	8.2	FA 03	5	9400	8.0	7.9
0.55	M 1LA 4	1380	3.8	○	69.0	68.9	68.8	0.74	1.55	4.1	2.3	2.3	9.1	6.9	FD 53	7.5	4300	8700	10.2	9.6	FA 03	7.5	8700	10.2	9.3
0.75	M 2SA 4	1400	5.1	•	75.0	74.5	69.3	0.78	1.85	4.9	2.7	2.5	20	9.2	FD 04	15	4100	7800	22	13.1	FA 04	15	7800	22	13.0
1.1	M 2SB 4	1400	7.5	•	76.4	76.2	70.4	0.78	2.66	5.1	2.8	2.5	25	10.6	FD 04	15	2600	5300	27	14.5	FA 04	15	5300	27	14.4
1.5	M 3SA 4	1410	10.2	•	79.6	80.5	79.3	0.77	3.5	4.6	2.1	2.1	34	15.5	FD 15	26	2800	4900	38	22	FA 15	26	4900	38	23
2.2	M 3LA 4	1410	14.9	•	81.1	81.4	79.9	0.75	5.2	4.5	2.2	2.0	40	17	FD 15	40	2600	4700	44	24	FA 15	40	4700	44	24
3	M 3LB 4	1410	20	•	82.6	83.8	83.7	0.77	6.8	5.0	2.3	2.2	54	21	FD 15	40	2400	4400	58	27	FA 15	40	4400	58	28
4	M 3LC 4	1400	27	○	82.7	83.1	80.5	0.78	9.0	4.7	2.3	2.2	61	23	FD 55	55	—	1300	65	29	FA 15	40	1300	65	30
5.5	M 4SA 4	1440	36	•	84.7	84.8	82.5	0.81	11.6	5.5	2.3	2.2	213	42	FD 56	75	—	1050	223	55	FA 06	75	1050	223	56
7.5	M 4LA 4	1440	50	•	86.0	86.3	85.3	0.81	15.5	5.7	2.5	2.4	270	51	FD 06	100	—	950	280	64	FA 07	100	950	280	65
9.2	M 4LB 4	1440	61	•	88.4	88.6	87.5	0.81	18.8	5.9	2.7	2.5	319	57	FD 07	150	—	900	342	73	FA 07	150	900	342	75
11	M 4LC 4	1440	73	•	87.6	87.8	86.0	0.81	22.4	6.0	2.7	2.5	360	65	FD 07	150	—	850	382	81	FA 07	150	850	382	83
15	M 5SB 4	1460	98	•	88.7	88.5	88.4	0.81	30.1	6.0	2.3	2.1	650	85	FD 08	200	—	750	725	115	FA 08	200	750	710	114
18.5	M 5LA 4	1460	121	•	89.3	89.5	89.2	0.81	37	6.2	2.6	2.5	790	101	FD 08	250	—	700	865	131	FA 08	250	700	850	130

○ = n.a. • = IE1

6P — 1000 min^{-1} - S1 — 50 Hz

															直流制动器						交流制动器				
															FD						FA				
P_n kW			n min^{-1}	M_n Nm	IE1	η (100%) %	η (75%) %	η (50%) %	cosφ	In 400V A	Is/In	Ms/Mn	Ma/Mn	J_m x 10^{-4} kgm^2	IM B5 Kg	Mod	Mb Nm	Z_o 1/h NB	Z_o 1/h SB	J_m x 10^{-4} kgm^2	IM B5 Kg	Mod	Mb Nm	Z_o 1/h	J_m x 10^{-4} kgm^2	IM B5 Kg
0.09	M 05A	6	880	0.98	○	41.0	41.0	32.9	0.53	0.60	2.1	2.1	1.8	3.4	4.3	FD 02	3.5	9000	14000	4.0	6.0	FA 02	3.5	14000	4.0	5.8
0.12	M 05B	6	870	1.32	○	45.0	44.0	41.8	0.60	0.64	2.1	1.9	1.7	3.7	4.6	FD 02	3.5	9000	14000	4.3	6.3	FA 02	3.5	14000	4.3	6.1
0.18	M 1SC	6	900	1.91	○	55.0	55.5	51.0	0.69	0.68	2.6	1.9	1.7	8.4	5.1	FD 03	5	8100	13500	9.5	7.8	FA 03	5	13500	9.5	7.5
0.25	M 1SD	6	900	2.7	○	62.0	58.5	51.4	0.71	0.82	2.6	1.9	1.7	10.9	6.3	FD 03	5	7800	13000	12	9.0	FA 03	5	13000	12	8.7
0.37	M 1LA	6	910	3.9	○	66.0	60.0	53.3	0.69	1.17	3.0	2.4	2.0	12.9	7.3	FD 53	7.5	5100	9500	14	10.0	FA 03	7.5	9500	14	9.7
0.55	M 2SA	6	920	5.7	○	70.0	69.8	64.3	0.68	1.67	3.9	2.6	2.2	25	10.6	FD 04	15	4800	7200	27	14.5	FA 04	15	7200	27	14.4
0.75	M 2SB	6	920	7.8	•	70.0	70.0	64.4	0.65	2.38	3.8	2.5	2.2	28	11.5	FD 04	15	3400	6400	30	15.4	FA 04	15	6400	30	15.3
1.1	M 3SA	6	920	11.4	•	75.0	74.0	72.0	0.72	2.9	4.3	2.0	1.8	33	17	FD 15	26	2700	5000	37	23	FA 15	26	5000	37	24
1.5	M 3LA	6	940	15.2	•	75.2	74.2	70.3	0.72	4.0	4.1	2.1	2.0	82	21	FD 15	40	1900	4100	86	27	FA 15	40	4100	86	28
1.85	M 3LB	6	930	19.0	•	76.6	72.8	62.6	0.73	4.8	4.6	2.1	2.0	95	23	FD 15	40	1700	3600	99	29	FA 15	40	3600	99	30
2.2	M 3LC	6	930	23	•	77.7	76.8	72.4	0.71	5.8	4.7	2.3	2.1	95	23	FD 55	55	—	1900	99	29	FA 15	40	1900	99	30
3	M 4SA	6	940	30	•	79.7	77.0	75.1	0.76	7.1	5.1	1.9	1.8	216	34	FD 56	75	—	1400	226	47	FA 06	75	1400	226	48
4	M 4LA	6	950	40	•	81.4	81.5	79.5	0.77	9.2	5.5	2.0	1.8	295	43	FD 06	100	—	1200	305	56	FA 07	100	1200	305	57
5.5	M 4LB	6	945	56	•	83.1	80.9	79.1	0.78	12.2	6.1	2.1	1.9	383	54	FD 07	150	—	1050	406	70	FA 07	150	1050	406	72
7.5	M 5SA	6	955	75	•	85.0	85.0	84.8	0.81	15.7	5.9	2.2	2.0	740	69	FD 08	170	—	900	815	98	FA 08	170	900	800	98
11	M 5SB	6	960	109	•	86.4	86.5	85.9	0.81	22.7	6.6	2.5	2.3	970	89	FD 08	200	—	800	1045	119	FA 08	200	800	1030	118

○ = n.a. • = IE1

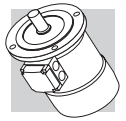

2/4P — 3000/1500 min^{-1} - S1 — 50 Hz

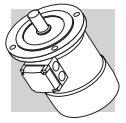

													直流制动器						交流制动器				
													FD						FA				
P_n kW			n min^{-1}	M_n Nm	η %	cosφ	In 400V A	Is/In	Ms/Mn	Ma/Mn	J_m x 10^{-4} kgm^2	IM B5 Kg	Mod	Mb Nm	Z_o 1/h NB	Z_o 1/h SB	J_m x 10^{-4} kgm^2	IM B5 Kg	Mod	Mb Nm	Z_o 1/h	J_m x 10^{-4} kgm^2	IM B5 Kg
0.20	**M 05A**	**2**	2700	0.71	55	0.82	0.64	3.5	2.1	1.9	2.9	4.1	**FD 02**	3.5	2200	2600	3.5	5.8	**FA 02**	3.5	2600	3.5	5.6
0.15		**4**	1350	1.06	49	0.67	0.66	2.6	1.8	1.7					4000	5100					5100		
0.28	**M 1SB**	**2**	2700	0.99	56	0.82	0.88	2.9	1.9	1.7	4.7	4.0	**FD 03**	3.5	2100	2400	5.8	6.7	**FA 03**	3.5	2400	5.8	6.4
0.20		**4**	1370	1.39	59	0.68	1.02	3.1	1.8	1.7					3800	4800					4800		
0.37	**M 1SC**	**2**	2740	1.29	56	0.82	1.16	3.5	1.8	1.8	5.8	4.7	**FD 03**	5	1400	2100	6.9	7.4	**FA 03**	5	2100	6.9	7.1
0.25		**4**	1390	1.72	60	0.73	0.82	3.3	2.0	1.9					2900	4200					4200		
0.45	**M 1SD**	**2**	2780	1.55	63	0.85	1.21	3.8	1.8	1.8	6.9	5.5	**FD 03**	5	1400	2100	8.0	8.2	**FA 03**	5	2100	8.0	7.9
0.30		**4**	1400	2.0	63	0.74	0.93	3.8	2.1	1.9					2900	4200					4200		
0.55	**M 1LA**	**2**	2800	1.9	73	0.79	1.38	4.2	2.0	1.8	9.1	6.9	**FD 03**	5	1600	2200	10.2	9.6	**FA 03**	5	2200	10.2	9.3
0.37		**4**	1400	2.5	68	0.72	1.09	3.9	2.2	2.0					3300	4600					4600		
0.75	**M 2SA**	**2**	2780	2.6	65	0.85	1.96	3.8	1.9	1.8	20	9.2	**FD 04**	10	1400	1600	22	13.1	**FA 04**	10	1600	22	13.0
0.55		**4**	1400	3.8	68	0.81	1.44	3.9	1.7	1.7					2700	3600					3600		
1.1	**M 2SB**	**2**	2730	3.9	65	0.86	2.84	3.9	2.0	1.9	25	10.7	**FD 04**	10	1200	1500	27	14.5	**FA 04**	10	1500	27	14.5
0.75		**4**	1410	5.1	75	0.81	1.78	4.5	2.1	2.0					2300	3100					3100		
1.5	**M 3SA**	**2**	2830	5.1	74	0.83	3.5	4.7	2.1	2.0	34	15.5	**FD 15**	26	700	1000	38	22	**FA 15**	26	1000	38	23
1.1		**4**	1420	7.4	77	0.78	2.6	4.3	2.1	2.0					1600	2600					2600		
2.2	**M 3LA**	**2**	2800	7.5	72	0.85	5.2	4.5	2.0	1.9	40	17	**FD 15**	26	600	900	44	24	**FA 15**	26	900	44	24
1.5		**4**	1410	10.2	73	0.79	3.8	4.7	2.0	2.0					1300	2300					2300		
3.5	**M 3LB**	**2**	2850	11.7	80	0.84	7.5	5.4	2.2	2.1	61	23	**FD 15**	40	500	900	65	29	**FA 15**	40	900	65	30
2.5		**4**	1420	16.8	82	0.80	5.5	5.2	2.2	2.2					1000	2100					2100		
4.8	**M 4 SA**	**2**	2900	15.8	81	0.88	9.7	6.0	2.0	1.9	213	42	**FD 06**	50	—	400	233	55	**FA 06**	50	400	233	56
3.8		**4**	1430	25.4	81	0.84	8.1	5.2	2.1	2.1					—	950					950		
5.5	**M 4SB**	**2**	2890	18.2	80	0.87	11.4	5.9	2.4	2.0	213	42	**FD 56**	75	—	350	223	55	**FA 06**	75	350	223	56
4.4		**4**	1440	29	82	0.84	9.2	5.3	2.2	2.0					—	900					900		
7.5	**M 4LA**	**2**	2900	25	82	0.87	15.2	6.5	2.4	2.0	270	51	**FD 06**	100	—	350	280	64	**FA 07**	100	350	280	65
6		**4**	1430	40	84	0.85	12.1	5.8	2.3	2.1					—	950					950		
9.2	**M 4LB**	**2**	2920	30	83	0.86	18.6	6.0	2.6	2.2	319	57	**FD 07**	150	—	300	342	73	**FA 07**	150	300	342	75
7.3		**4**	1440	48	85	0.85	14.6	5.5	2.3	2.1					—	800					800		

2/6P — 3000/1000 min^{-1} - S3 60/40% — 50 Hz

													直流制动器						交流制动器				
													FD						FA				
P_n kW			n min^{-1}	M_n Nm	η %	cosφ	In 400V A	Is/In	Ms/Mn	Ma/Mn	J_m x 10^{-4} kgm^2	IM B5 Kg	Mod	Mb Nm	Z_o 1/h NB	Z_o 1/h SB	J_m x 10^{-4} kgm^2	IM B5 Kg	Mod	Mb Nm	Z_o 1/h	J_m x 10^{-4} kgm^2	IM B5 Kg
0.25	M 1SA	2	2850	0.84	60	0.82	0.73	4.3	1.9	1.8	6.9	5.5	FD 03	1.75	1500	1700	8.0	8.2	FA 03	1.75	1700	8.0	7.9
0.08		6	910	0.84	43	0.70	0.38	2.1	1.4	1.5					10000	13000					13000		
0.37	M 1LA	2	2880	1.23	62	0.80	1.08	4.4	1.9	1.8	9.1	6.9	FD 03	3.5	1000	1300	10.2	9.6	FA 03	3.5	1300	10.2	9.3
0.12		6	900	1.27	44	0.73	0.54	2.4	1.4	1.5					9000	11000					11000		
0.55	M 2SA	2	2800	1.88	63	0.86	1.47	4.5	1.9	1.7	20	9.2	FD 04	5	1500	1800	22	13.1	FA 04	5	1800	22	13.0
0.18		6	930	1.85	52	0.65	0.77	3.3	2.0	1.9					4100	6300					6300		
0.75	M 2SB	2	2800	2.6	66	0.87	1.89	4.3	1.8	1.6	25	10.6	FD 04	5	1700	1900	27	14.5	FA 04	5	1900	27	14.4
0.25		6	930	2.6	54	0.67	1.00	3.2	1.7	1.8					3800	6000					6000		
1.1	M 3SA	2	2870	3.7	71	0.82	2.73	4.9	1.8	1.9	34	15.5	FD 15	13	1000	1300	38	22	FA 15	13	1300	38	23
0.37		6	930	3.8	63	0.70	1.21	3.1	1.5	1.8					3500	5000					5000		
1.5	M 3LA	2	2880	5.0	73	0.84	3.53	5.1	1.9	2.0	40	17	FD 15	13	1000	1200	44	24	FA 15	13	1200	44	24
0.55		6	940	5.6	64	0.67	1.85	3.5	1.7	1.8					2900	4000					4000		
2.2	M 3LB	2	2900	7.2	77	0.85	4.9	5.9	2.0	2.0	61	23	FD 15	26	700	900	65	29	FA 15	26	900	65	30
0.75		6	950	7.5	67	0.64	2.5	3.3	1.9	1.8					2100	3000					3000		
3	M 4SA	2	2910	9.9	74	0.88	6.6	5.6	2.0	2.1	170	36	FD 56	37	—	600	182	48	FA 06	37	600	182	50
1.1		6	960	10.9	73	0.68	3.2	4.5	2.2	2.0					—	2200					2200		
4.5	M 4SB	2	2910	14.8	78	0.84	9.9	5.8	1.9	1.8	213	42	FD 56	37	—	500	223	55	FA 06	37	500	223	56
1.5		6	960	14.9	74	0.67	4.4	4.2	1.9	2.0					—	2100					2100		
5.5	M 4LA	2	2920	18.0	78	0.87	11.7	6.2	2.1	1.9	270	51	FD 06	50	—	400	280	64	FA 06	50	400	280	65
2.2		6	960	22	77	0.71	5.8	4.3	2.1	2.0					—	1900					1900		

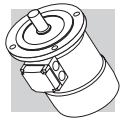

2/8P — **3000/750 min^{-1}** - S3 60/40% — **50 Hz**

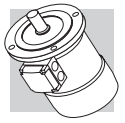

													直流制动器						交流制动器				
													FD						FA				
P_n kW			n min^{-1}	M_n Nm	η %	cosφ	In 400V A	Is/In	Ms/Mn	Ma/Mn	J_m x 10^{-4} kgm^2	IM B5 Kg	Mod	Mb Nm	Z_o 1/h NB	Z_o 1/h SB	J_m x 10^{-4} kgm^2	IM B5 Kg	Mod	Mb Nm	Z_o 1/h	J_m x 10^{-4} kgm^2	IM B5 Kg
0.37	**M 1LA**	**2**	2800	1.26	63	0.86	0.99	3.9	1.8	1.9	12.9	7.3	**FD 03**	3.5	1200	1300	14	10.0	**FA 03**	3.5	1300	14	9.7
0.09		**8**	670	1.28	34	0.75	0.51	1.8	1.4	1.5					9500	13000					13000		
0.55	**M 2SA**	**2**	2830	1.86	66	0.86	1.40	4.4	2.1	2.0	20	9.2	**FD 04**	5	1500	1800	22	13.1	**FA 04**	5	1800	22	13.0
0.13		**8**	690	1.80	41	0.64	0.72	2.3	1.6	1.7					5600	8000					8000		
0.75	**M 2SB**	**2**	2800	2.6	68	0.88	1.81	4.6	2.1	2.0	25	10.6	**FD 04**	10	1700	1900	27	14.5	**FA 04**	10	1900	27	14.4
0.18		**8**	690	2.5	43	0.66	0.92	2.3	1.6	1.7					4800	7300					7300		
1.1	**M 3SA**	**2**	2870	3.7	69	0.84	2.74	4.6	1.8	1.7	34	15.5	**FD 15**	13	1000	1300	38	22	**FA 15**	13	1300	38	23
0.28		**8**	690	3.9	44	0.56	1.64	2.3	1.4	1.7					3400	5000					5000		
1.5	**M 3LA**	**2**	2880	5.0	69	0.85	3.69	4.7	1.9	1.8	40	17	**FD 15**	13	1000	1200	44	24	**FA 15**	13	1200	44	24
0.37		**8**	690	5.1	46	0.63	1.84	2.1	1.6	1.6					3300	5000					5000		
2.4	**M 3LB**	**2**	2900	7.9	75	0.82	5.6	5.4	2.1	2.0	61	23	**FD 15**	26	550	700	65	29	**FA 15**	26	700	65	30
0.55		**8**	700	7.5	54	0.58	2.5	2.6	1.8	1.8					2000	3500					3500		
3	**M 4SA**	**2**	2920	9.8	72	0.85	7.1	5.6	2.0	1.8	162	36	**FD 56**	37	—	600	182	48	**FA 06**	37	600	182	50
0.75		**8**	710	10.1	61	0.64	2.8	3.0	1.7	1.8					—	3400					3400		
4	**M 4SB**	**2**	2870	13.3	73	0.84	9.4	5.6	2.3	2.4	213	42	**FD 56**	37	—	500	223	55	**FA 06**	37	500	223	56
1		**8**	690	13.8	66	0.62	3.5	2.9	1.9	1.8					—	3500					3500		
5.5	**M 4LA**	**2**	2870	18.3	75	0.84	12.6	6.1	2.4	2.5	270	51	**FD 06**	50	—	400	280	64	**FA 06**	50	400	280	65
1.5		**8**	690	21	68	0.63	5.1	2.9	1.9	1.9					—	2400					2400		

2/12P — 3000/500 min^{-1} - S3 60/40% — 50 Hz

													直流制动器						交流制动器				
													FD						FA				
P_n kW			n min^{-1}	M_n Nm	η %	cosφ	In 400V A	Is/In	Ms/Mn	Ma/Mn	J_m x 10^{-4} kgm^2	IM B5 Kg	Mod	Mb Nm	Z_o 1/h NB	Z_o 1/h SB	J_m x 10^{-4} kgm^2	IM B5 Kg	Mod	Mb Nm	Z_o 1/h	J_m x 10^{-4} kgm^2	IM B5 Kg
0.55	**M 2SA**	**2**	2820	1.86	64	0.89	1.39	4.2	1.6	1.7	25	10.6	**FD 04**	5	1000	1300	27	14.5	**FA 04**	5	1300	27	14.4
0.09		**12**	430	2.0	30	0.63	0.69	1.8	1.9	1.8					8000	12000					12000		
0.75	**M 3SA**	**2**	2900	2.5	65	0.81	2.06	5.2	1.9	2.1	34	15.5	**FD 15**	13	700	900	38	22	**FA 15**	13	900	38	23
0.12		**12**	460	2.5	33	0.43	1.22	1.9	1.3	1.6					5000	7000					7000		
1.1	**M 3LA**	**2**	2850	3.7	65	0.85	2.87	4.5	1.6	1.8	40	17	**FD 15**	13	700	900	44	24	**FA 15**	13	900	44	24
0.18		**12**	430	4.0	26	0.54	1.85	1.5	1.3	1.5					4000	6000					6000		
1.5	**M 3LB**	**2**	2900	4.9	67	0.86	3.76	5.6	1.9	1.9	54	21	**FD 15**	13	700	900	58	27	**FA 15**	13	900	58	28
0.25		**12**	440	5.4	36	0.46	2.18	1.8	1.7	1.8					3800	5000					5000		
2	**M 3LC**	**2**	2850	6.7	70	0.84	4.9	4.9	1.8	1.7	61	23	**FD 55**	18	—	700	65	29	**FA 15**	18	700	65	30
0.3		**12**	450	6.4	38	0.47	2.4	1.7	1.6	1.7					—	3500					3500		
3	**M 4SA**	**2**	2920	9.8	74	0.87	6.7	6.8	2.3	1.9	213	42	**FD 56**	37	—	450	223	55	**FA 06**	37	450	223	56
0.5		**12**	470	10.2	51	0.43	3.3	2.0	1.7	1.6					—	3000					3000		
4	**M 4LA**	**2**	2920	13.1	75	0.89	8.6	5.9	2.4	2.3	270	51	**FD 56**	37	—	400	280	64	**FA 06**	37	400	280	65
0.7		**12**	460	14.5	53	0.44	4.3	1.9	1.7	1.6					—	2800					2800		

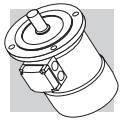

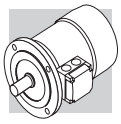

BN - IM B5

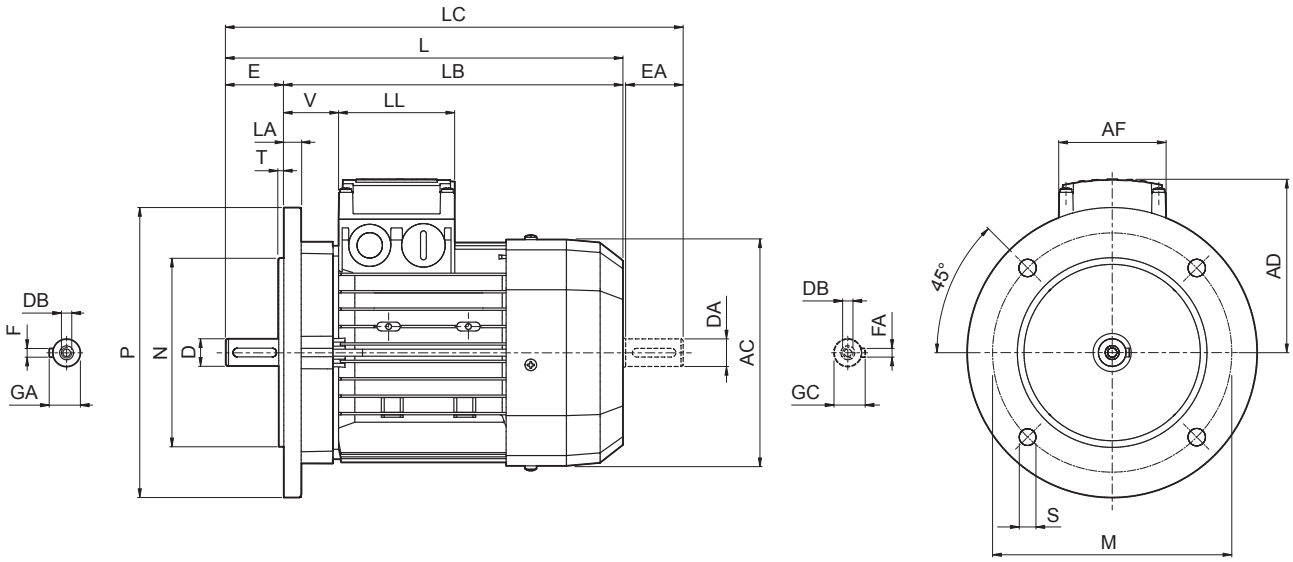

	轴					法兰						电机							
	D DA	E EA	DB	GA GC	F FA	M	N	P	S	T	LA	AC	L	LB	LC	AD	AF	LL	V
BN 56	9	20	M3	10.2	3	100	80	120	7	3	8	110	185	165	207	91	74	80	34
BN 63	11	23	M4	12.5	4	115	95	140	9.5		10	121	207	184	232	95			26
BN 71	14	30	M5	16	5	130	110	160		3.5		138	249	219	281	108			37
BN 80	19	40	M6	21.5	6	165	130	200	11.5		11.5	156	274	234	315	119			38
BN 90	24	50	M8	27	8							176	326	276	378	133	98	98	44
BN 100	28	60	M10	31		215	180	250	14	4	14	195	367	307	429	142			50
BN 112											15	219	385	325	448	157			52
BN 132	38	80	M12	41	10	265	230	300			20	258	493	413	576	193	118	118	58
BN 160 MR	42 38(1)	110 80(1)	M16 M12(1)	45 41(1)	12 10(1)	300	250	350	18.5	5	15		562	452	645				218
BN 160 M												310	596	486	680	245	187	187	51
BN 160 L																			
BN 180 M	48 38(1)	110 110(1)		51.5 41(1)	14 10(1)							310	640	530	724				
BN 180 L	48 42(1)		M16 M16(1)	51.5 45(1)	14 12(1)						18	348	708	598	823	261			52
BN 200 L	55 42(1)		M20 M16(1)	59 45(1)	16 12(1)	350	300	400					722	612	837				66

注意:
1）这些是电机尾轴的数值

BN_FD ; IM B5

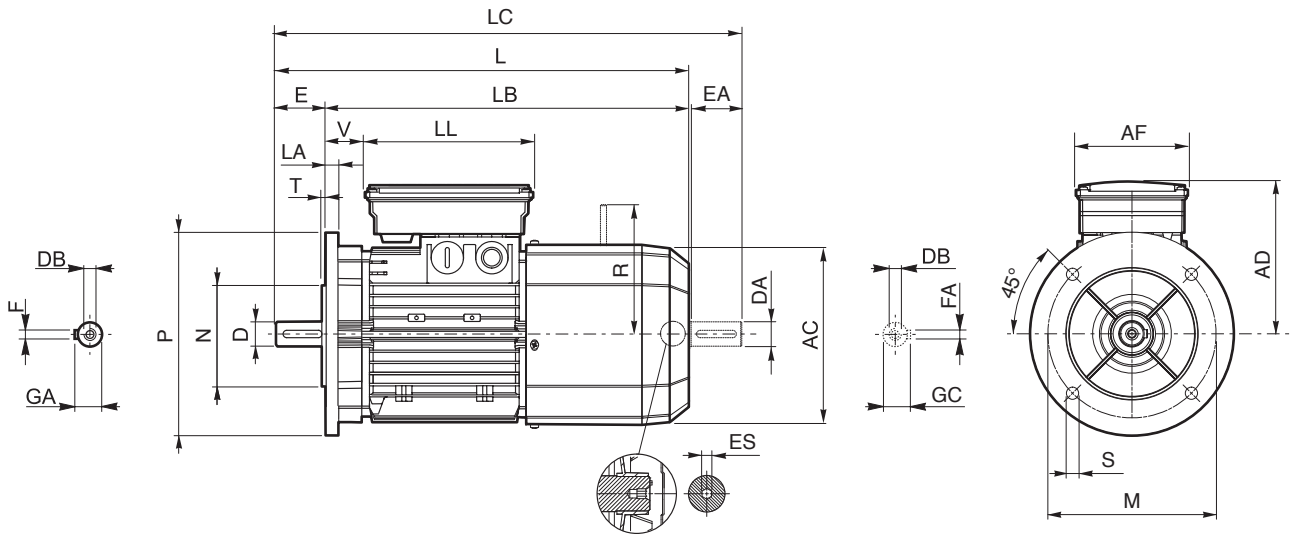

	轴					法兰						电机									
	D DA	E EA	DB	GA GC	F FA	M	N	P	S	T	LA	AC	L	LB	LC	AD	AF	LL	V	R	ES
BN 63	11	23	M4	12.5	4	115	95	140	9.5	3	10	121	272	249	297	122	98	133	14	96	5
BN 71	14	30	M5	16	5	130	110	160	9.5	3.5	11.5	138	310	280	342	135			25	103	
BN 80	19	40	M6	21.5	6	165	130	200	11.5			156	346	306	388	146			41	129	
BN 90 S	24	50	M8	27	8							176	409	359	461	149	110	165	39		6
BN 90 L																146				160	
BN 100	28	60	M10	31		215	180	250	14	4	14	195	458	398	521	158		165	62		
BN 112											15	219	484	424	547	173		165	73	199	
BN 132	38	80	M12	41	10	265	230	300			20	258	603	523	686	210	140	188	46	204(2)	
BN 160 MR	42 38(1)	110 80(1)	M16 M12(1)	45 41(1)	12 10(1)	300	250	350	18.5	5	15		672	562	755				161	226	
BN 160 M												310	736	626	820	245	187	187	51	266	—
BN 160 L	42 38(1)																				
BN 180 M	48 38(1)			51.5 41(1)	14 10(1)								780	670	864						
BN 180 L	48 42(1)	110 110(1)	M16 M16(1)	51.5 45(1)	14 12(1)						18	348	866	756	981	261			52	305	
BN 200 L	55 42(1)		M20 M16(1)	59 45(1)	16 12(1)	350	300	400	18.5				878	768	993				64		

注意:
1）这些是电机尾轴的数值
2）FD07制动器手柄长度R=226

PS双出轴结构电机尾轴上没有内六角孔

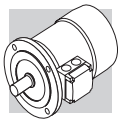

BN_FA - IM B5

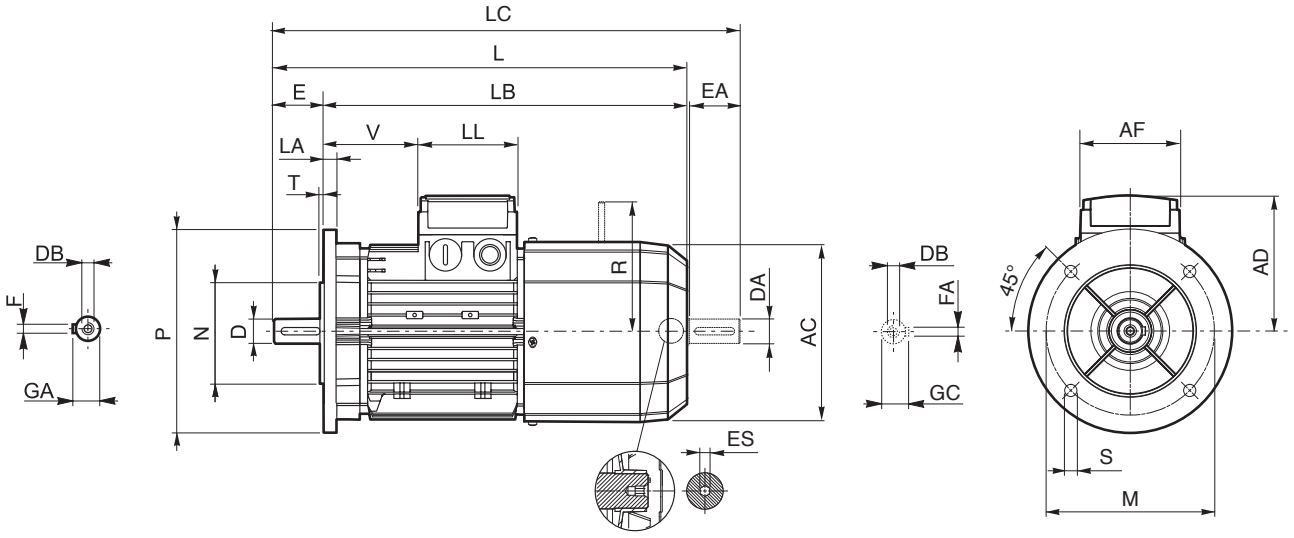

	轴					法兰						电机									
	D DA	E EA	DB	GA GC	F FA	M	N	P	S	T	LA	AC	L	LB	LC	AD	AF	LL	V	R	ES
BN 63	11	23	M4	12.5	4	115	95	140	9.5	3	10	121	272	249	297	95	74	80	26	116	5
BN 71	14	30	M5	16	5	130	110	160		3.5		138	310	280	342	108			68	124	
BN 80	19	40	M6	21.5	6	165	130	200	11.5		11.5	156	346	306	388	119			83	134	
BN 90	24	50	M8	27	8							176	409	359	461	133	98	98	95	160	6
BN 100	28	60	M10	31		215	180	250	14	4	14	195	458	398	521	142			119		
BN 112											15	219	484	424	547	157			128	198	
BN 132	38	80	M12	41	10	265	230	300			20	258	603	523	686	210	140	188	46	200(2)	
BN 160 MR	42 38(1)	110 80(1)	M16 M12(1)	45 41(1)	12 10(1)	300	250	350	18.5	5	15		672	562	755	193	118	118	218	217	
BN 160 M												310	736	626	820	245	187	187	51	247	—
BN 160 L																					
BN 180 M	48 38(1)			51.5 41(1)	14 10(1)								780	670	864						

注意:
1）这些是电机尾轴的数值
2）FA07制动器手柄长度R=217

尺寸AD，AF，LL和V，与电机接线盒BN…FA有关，具有单独的制动器电源（选用SA），与相同机座号的BN…FD电机相关的尺寸一致。

PS双出轴结构电机尾轴上没有内六角孔

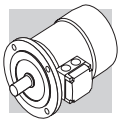

M

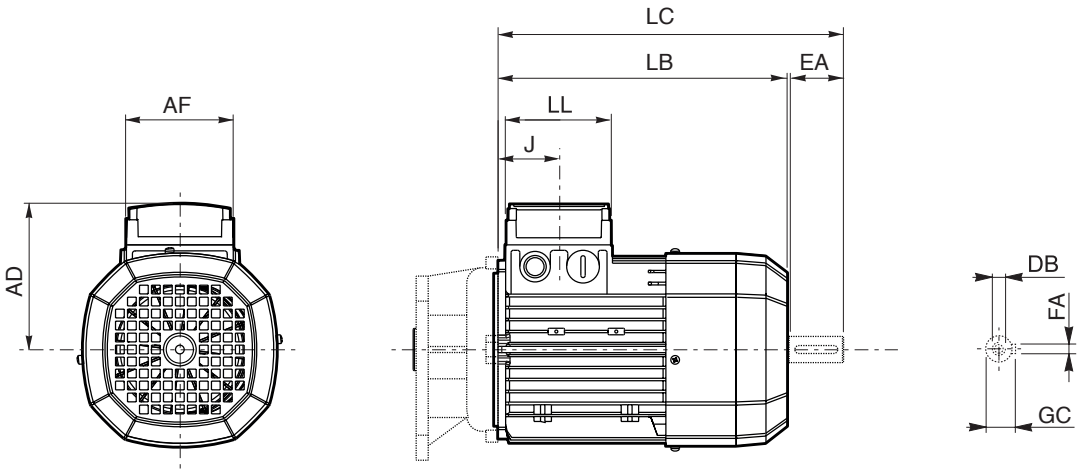

	电机尾轴					电机						
	DA	**EA**	**DB**	**FA**	**GC**	**AC**	**LB**	**LC**	**AF**	**LL**	**J**	**AD**
M 0	9	20	M3	3	10.2	110	133	155	74	80	42	91
M 05	11	23	M4	4	12.5	121	165	191			48	95
M 1	14	30	M5	5	16	138	187	219			45	108
M 2 S	19	40	M6	6	21.5	156	202	245			44	119
M 3 S	28	60	M10	8	31	195	230	293	98	98	53.5	142
M 3 L							262	325				
M 4	38	80	M12	10	41	258	361	444	118	118	64.5	193
M 4 LC							396	479				
M 5 S						310	418	502	187	187	77	245
M 5 L							462	546				

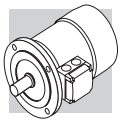

M_FD

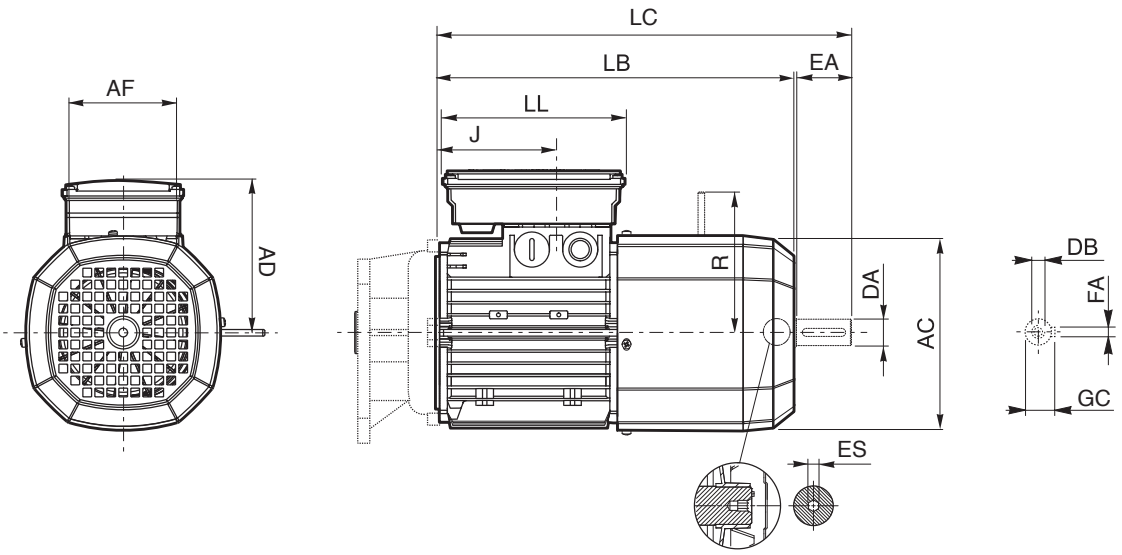

	电机尾轴					电机								
	DA	**EA**	**DB**	**FA**	**GC**	**AC**	**LB**	**LC**	**AF**	**LL**	**J**	**AD**	**R**	**ES**
M 05	11	23	M4	4	12.5	121	231	256	98	133	48	122	96	5
M 1	14	30	M5	5	16	138	248	280			73	135	103	
M 2 S	19	40	M6	6	21.5	156	272	314			88	146	129	
M 3 S	28	60	M10	8	31	195	326	389	110	165	124.5	158	160	6
M 3 L							353	416						
M 4	38	80	M12	10	41	258	470	553	140	188	185.5	210	204 (1)	
M 4 LC							495	578			64.5		226	
M 5 S						310	558	642	187	187	77	245	266	—
M 5 L							602	686						

注意:
1）FD07制动器手柄长度R=226

PS双出轴结构电机尾轴上没有内六角孔

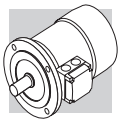

M_FA

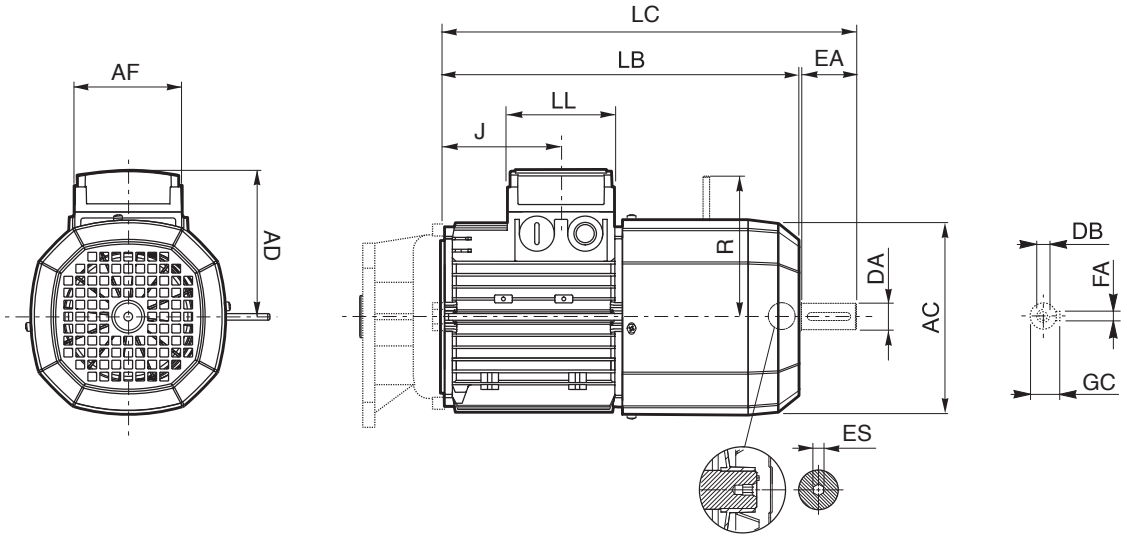

	电机尾轴					电机								
	DA	**EA**	**DB**	**FA**	**GC**	**AC**	**LB**	**LC**	**AF**	**LL**	**J**	**AD**	**R**	**ES**
M 05	11	23	M4	4	12.5	121	231	256	74	80	48	95	116	5
M 1	14	30	M5	5	16	138	248	280			73	108	124	
M 2 S	19	40	M6	6	21.5	156	272	314			88	119	134	
M 3 S	28	60	M10	8	31	195	326	389	98	98	124.5	142	160	6
M 3 L							353	416						
M 4	38	80	M14	10	41	258	470	553	140	188	185.5	210	200 (1)	
M 4 LC							495	578			64.5		217	
M 5 S			M12			310	558	642	187	187	77	245	247	—
M 5 L							602	686						

注意:
1）FA07制动器手柄长度R=217

电机型号BN..FA的接线盒尺寸AD, AF, LL, V与电机型号BN..FD一致。

PS双出轴结构电机尾轴上没有内六角孔

修订索引

BR_CAT_CAFS_IE2-IE3_CHN_R06_0	
	描述
71…73 209…211 361…363	新增BX 200LA 4、BX 225SA 4、BX 225SB 4、BX 250MA 4、BX 280SA 4、BX 280SB 4型电机的可用性。
492...580	更新电机章节。

2019 04 12

这一版取代以往所有的版本。我们保留在没有通知的情况下修改的权利。如果事先没有征得我们的同意，样本不能复制，即使是部分。

Bonfiglioli
Forever Forward

我们坚持不懈地追求卓越、创新和可持续发展。我们的团队创造、分销和维护世界一流的动力传动和驱动解决方案，为世界持续运转提供动力。

总部

Bonfiglioli Riduttori S.p.A.
Via Giovanni XXIII, 7/A
40012 Lippo di Calderara di Reno
Bologna (Italy)
www.bonfiglioli.com

邦飞利传动设备（上海）有限公司
上海市青浦区汇联路68号
邮编：201707
电话：+86 21 6700 2000
传真：+86 21 6700 2100
网址：www.bonfiglioli.cn