Bonfiglioli

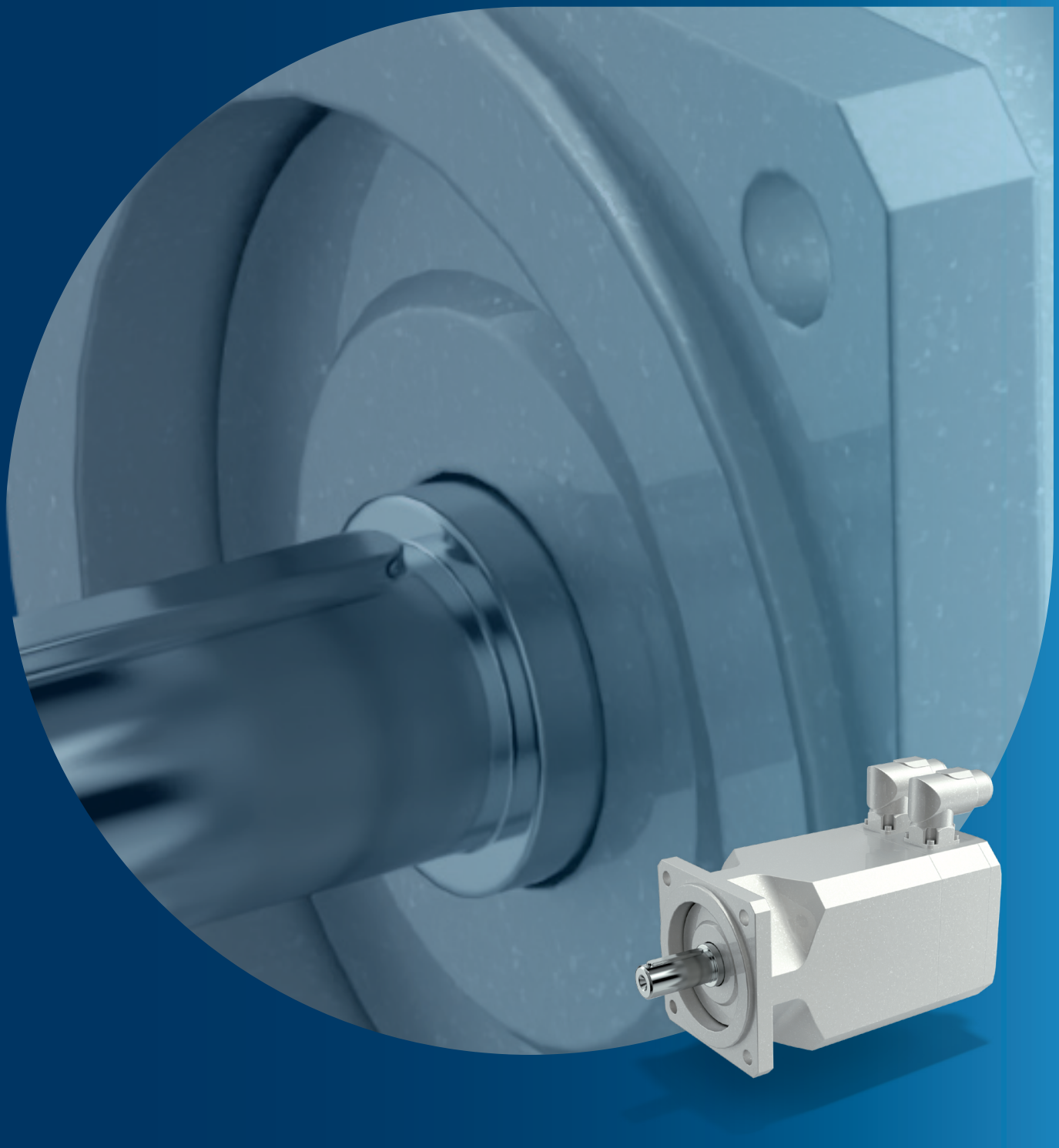

BMD Series

PERMANENT MAGNET AC SYNCHRONOUS MOTORS



We engineer dreams

CONTENTS

SERVOMOTOR REFERENCES

BMD Servomotors 4
Bonfiglioli servo systems 5
Standards and directivest 6
Symbols and units of measurement 7
Terms and Definitions 8
Rating Plates 10
Selecting the servomotor 11
Servomotor selection 12
Feedback selection 13
Degree of protection 16

MECHANICAL DATA

Bonfiglioli Permanent Magnet Synchronous Servomotors range 17
Product Designations of Bonfiglioli Servomotors 18

MECHANICAL DATA

Fixing Dimensions 20
Mechanical Tolerances 21
Bearings 21
Shaft Loads 22

RATINGS AND DIMENSIONS

BMD 65 24
BMD 82 26
BMD 102 28
BMD 118 30
BMD 145 32
BMD 145 with Force Ventilation Unit 34
BMD 170 36
BMD 170 with Force Ventilation Unit 38
Torque-speed characteristics 40

OPTIONS

Feedback Devices 48
Optical Encoders 50
Inductive and Capacitive Encoders 51
Thermal Protection 52
Electromechanical Holding Brake 52
Additional inertia feature 53
Forced Ventilation 53
Connections 55
Power Connections 56
Signal Connections 57
Hybrid Connections 59
Fan Unit Connections 60
Servocables 60
Power Servocables 61
Signal Servocables 63
Hybrid Servocables 64
Cable layout 66
Cable plugs 67

OUR PROJECTION INTO THE FUTURE ... 68

OUR CONSTANT AMBITION 69

OUR GLOBAL PRESENCE 70

Have feedback on this document? Scan here.

BMD SERVOMOTORS

Bonfiglioli's BMD is a series of permanent magnet AC synchronous motors made to serve a wide range of applications in Industrial Automation. Flexibility is a cornerstone of BMD offering. Our customers are using BMD, paired with Bonfiglioli's drives, to successfully move axis of automatic machinery in sectors like wood and metal working, packaging and labelling, robotics, food and beverage, textile and leather.

BMD rotor is made with high quality neodymium iron boron (NdFeB) rare-earth magnets, ensuring that dynamic performances are maximezed and that the motor can withstand high overloads without risk of demagnetization.
Thanks to the high quality of the neodymium iron boron rare-earth magnets, the performance is maximized in terms of high acceleration and high overloads withstand without risk of demagnetization.

The motors are available in six sizes covering a stall torque range between 0.85 ÷ 45 Nm with natural cooling and up to 60 Nm with forced ventilation.

These brushless sinusoidal motors are designed as standard for a three phase power supply, 230Vac and 400Vac.

BMD motor series are manufactured using class F insulation materials. The standard cooling method is free ventilation IC410. As option, the forced ventilation IC416 is available only for the size BMD 145 and BMD 170.

Since each servomotor has a protective temperature sensor (PTC, KTY or PT1000) embedded in the motor windings, operating temperature is constantly acquired and monitored by the drive to prevent all risks of damage to the motor irrespective of operating conditions.
An optional electromechanical holding brake is available for all models. Brake operation is controlled entirely by the frequency inverter.

BMD motors are optionally available with an additional flywheel mass to reach the ideal inertia mistmatch for each application dynamic requirement.

BMD series are available with degree of protection IP65 (standard) and IP67 (optional).

The following feedback devices are available:
- Resolver with excitation frequency 8 or 10 kHz
- Single turn absolute Sincos interface encoder
- Single turn and multi turn encoders with Hiperface, Hiperface DSL and EnDat protocols
- Functional safety encoder with Hiperface DSL and EnDat protocols
- No feedback version (specific sensorless control algorithm is required)

BMD Series servomotors are controlled in speed and/or torque by a suitable electronic servo drive. The servo drive therefore constitutes a fundamental part of the system and requires perfect matching with it in order to achieve optimum performance.

The combination of BMD servomotors with Bonfiglioli frequency inverters ensures the perfect control of the motor in order to optimize the functionality according to the machine requirements.
BMD series can be seamlessly mounted with either our Precision Planetary Gearbox series (PPG), composed by an Effective Line and a Performance Line, and our Industrial Gearbox series. Bonfiglioli servo gearmotors portfolio is able to cover any torque-speed range and to satisfy any need in terms of accuracy, repeatibility, dynamic behaviour and efficiency.

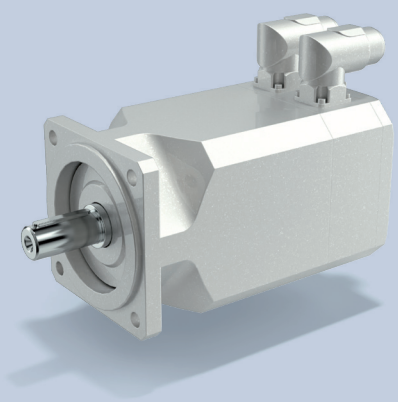

BMD Brushless motor photos used inside this catalogue do not represent the real product colour. The actual colour is black (RAL 9005). Silver dressing has to be intended for marketing and promotional purposes only.

BONFIGLIOLI SERVO SYSTEMS



Motion Controller



Standard Drive
AGL



Premium Drive
AXV & ACU



Servo Drive
ANG

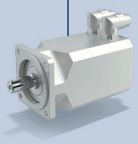

BMD

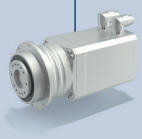

BMS

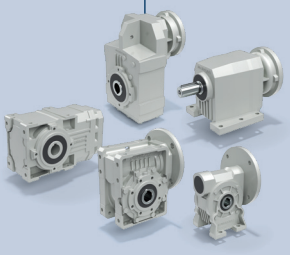

Industrial
Gearboxes

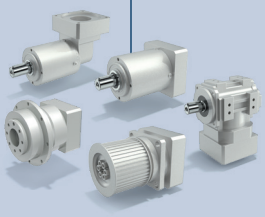

PPG
Effective Line

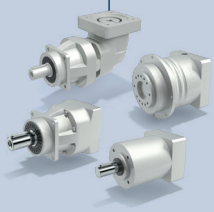

PPG
Performance Line

PRECISION

STANDARDS AND DIRECTIVES

BMD motors are manufactured in accordance with applicable standards and Directive listed in the following.

STANDARDS

IEC 60034-1, EN 60034-1
Rotating electrical machines
Part 1: Rating and performance

IEC 60034-2-3
Rotating electrical machines
Part 2-3: Specific test methods for determining losses and efficiency of converter-fed AC motor

IEC 60034-5, EN 60034-5
Rotating electrical machines
Part 5: Degrees of protection provided by the integral design of rotating electrical machines (IP code) - Classification

IEC 60034-6, EN 60034-6
Rotating electrical machines
Part 6: Methods of cooling (IC Code)

IEC 60034-8, EN 60034-8
Rotating electrical machines
Part 8: Terminal markings and direction of rotation

IEC 60034-14, IEC 60034-14
Rotating electrical machines
Part 14: Mechanical vibration - Measurement, evaluation and limits of vibration severity

IEC TS 60034-25
Rotating electrical machines
Part 25: Guidance for the design and performance of a.c. motors specifically designed for converter supply

IEC 60072-1
Dimensions and output series for rotating electrical machines - Part 1

DIRECTIVES

Low Voltage Directive: 2014/35/EU

The BMD servomotors series comply with UL and cUL standards for the North American market (UL file number E358266).

Restriction of Hazardous Substances:2011/65/UE
Motors do not fall within the scope covered by the EMC Directive. The products are not considered as devices in the sense of the directive. Installed and operated with a converter, the motor - together with the Power Drive System - must comply with the requirements laid down in the applicable EMC Directive

UL 1004-1
Rotating Electrical Machines
General Requirements

UL 1004-6
Servo and Stepper Motors

CSA C22.2 No. 100
Motors and Generators

SYMBOLS AND UNITS OF MEASUREMENT

SYMBOL	U.M.	DESCRIPTION
2p	[-]	Number of poles
dT	[K]	Winding temperature rise
f_H	[-]	Altitude adjustment factor
f_n	[Hz]	Rated frequency
f_T	[-]	Temperature adjustment factor
I_0	[A]	Stall RMS current
I_b	[A]	Brake DC current
I_{max}	[A]	Max RMS current
I_n	[A]	Rated RMS current
J_b	[$Kgm^2 \cdot 10^{-4}$]	Brake moment of inertia
J_M	[$Kgm^2 \cdot 10^{-4}$]	Motor moment of inertia
K_e	[$mV\ min^{-1}$]	Back EMF constant phase-phase
K_T	[Nm/A]	Torque constant
L_{pp}	[mH]	Stator phase-phase inductance
M_0	[Nm]	Stall torque
M_b	[Nm]	Brake torque
m_b	[kg]	Brake mass
M_{EQU}	[Nm]	Equivalent torque
M_{max}	[Nm]	Max torque
m_M	[kg]	Motor mass without brake flywheel
M_n	[Nm]	Rated torque
n_n	[min^{-1}]	Rated speed
P_b	[W]	Brake electrical power at 20°C
P_n	[kW]	Rated power
R_{pp}	[Ω]	Stator phase-phase resistance at 20°C
t_1	[ms]	Brake engaging time
t_2	[ms]	Brake relase time
V_b	[V]	Brake DC voltage
V_n	[V]	Rated voltage
ΔJ	[$Kgm^2 \cdot 10^{-4}$]	Inertia increase with brake/flywheel
Δm_M	[kg]	Mass increase with brake/flywheel
τ_{el}	[ms]	Electric time constant
τ_{therm}	[min]	Thermal time constant

Unless otherwise specified, all dimensions are expressed in millimeters.

TERMS AND DEFINITIONS

Back EMF constant [K_e]: is the relationship between the phase-to-phase RMS motor back EMF terminal voltage (V_{AC}) and the corresponding shaft rotational speed. It is typically computed as the RMS value of line voltage at speed of 1000 min^{-1} with a winding temperature of 20°C.

Duty type S1: Operation at constant load maintained for sufficient time to allow the machine to reach thermal equilibrium

Duty type S3: sequence of identical duty cycles, each including a time of operation at constant load and a time de-energized and at rest. If not specified the cycle time is fixed equal to 10 minutes.

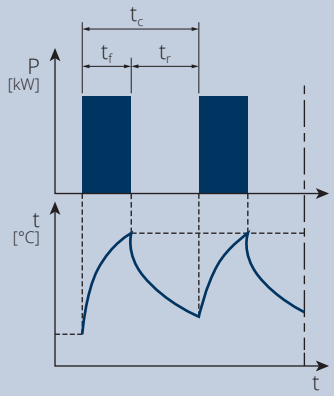

Intermittence:

$$I = \frac{t_f}{t_f + t_r} \cdot 100\%$$

t_f Work time under constant load
t_r Rest time

Electric time constant [τ_{el}]: is the time taken for the current to reach 63.2% of its steady state value when a step input voltage is applied while the rotor is stationary. Calculated by dividing the winding phase-to-phase inductance (L_{pp}) by the winding phase-to-phase resistance (R_{pp}) at 20°C.

$$\tau_{el} = L_{pp} / R_{pp}$$

Max current [I_{max}]: is the current required to develop the max torque (M_{max}). It is the current limit of the motor, and if exceeded, even for a short period, it may cause an irreversible damage of the motor.

Max torque [M_{max}]: is the maximum torque that servomotor develops for a short time.

Rated current [I_n]: is the RMS current to develop the rated torque (M_n).

Rated frequency [f_n]: is the frequency of the fundamental component of the output voltage corresponding at the rated speed (n_n) according to the following equation where p is the pole pairs.

$$f_n = p \cdot n_n / 60$$

TERMS AND DEFINITIONS

Rated power [P_n]: is the mechanical power available at shaft at rated speed n_n.

$$P_n = 2\pi \cdot M_n \cdot n_n / 60$$

Rated speed [n_n]: is the speed at which the motor has been designed to operate with a reasonable level of control, in terms of overload and overspeed.

Rated torque [M_n]: is the thermally permissible continuous torque for S1 duty at the rated motor speed (n_n). It is normally less than the standstill torque (M_0) due to rotational losses (iron losses, friction losses...).

Standstill current [I_0]: is the RMS current to develop the standstill torque (M_0).

Standstill torque [M_0]: is the thermal limit torque for S1 duty with the motor at zero speed.

Thermal equilibrium: is the state reached when the temperature rise of the several parts of the machine does not vary by more than a gradient of 1K per half hour.

Thermal time constant [τ_{therm}]: is the time required by the motor housing temperature to reach 63.2% of its final value after a stepwise current change.

Torque constant [K_T]: is the phase RMS current to torque transfer ratio at standstill condition. It is quoted at rated motor winding temperature in steady state condition (thermal equilibrium – S1 duty cycle).

Winding temperature rise [dT]: is the temperature rise, in specified service conditions, of the motor windings above the maximum reference ambient temperature.

RATING PLATES

In accordance with IEC 60034-1, the motor rating plate summarizes the motor data including the approximate total weight. Example of rating plate and fields description are reported hereafter.

Fields:

1) Product designation
2) Product code
3) Stall torque
4) Nominal torque
5) Nominal voltage
6) Stall current
7) Nominal current
8) Nominal speed
9) Insulation class
10) Degree of protection
11) Total weight
12) Motor mounting
13) Number of poles
14) Nominal brake voltage [1]
15) Nominal brake torque [1]
16) Nominal brake current [1]
17) UL certification logo [2]
18) Serial number
19) Serial number as barcode

[1] Only for brake motors (F24 option)
[2] Only for motors with CUS option

Example of BMD rating plate:

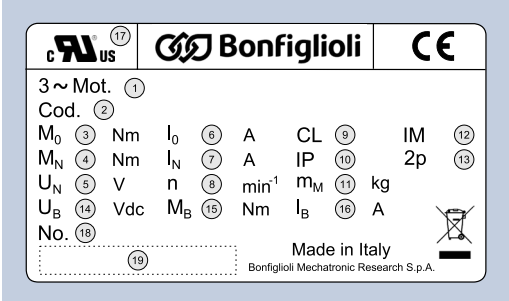

The fan unit data are summarized in a dedicated rating plate. Example of rating plate and fields description are reported hereafter.

Fields:

1) Product code
2) Nominal voltage
3) Nominal power
4) Degree of protection
5) Product code as barcode

Example of fan unit rating plate:

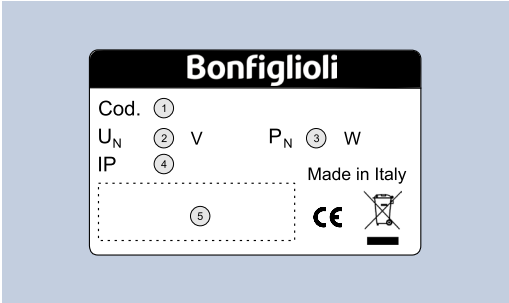

SELECTING THE SERVOMOTOR

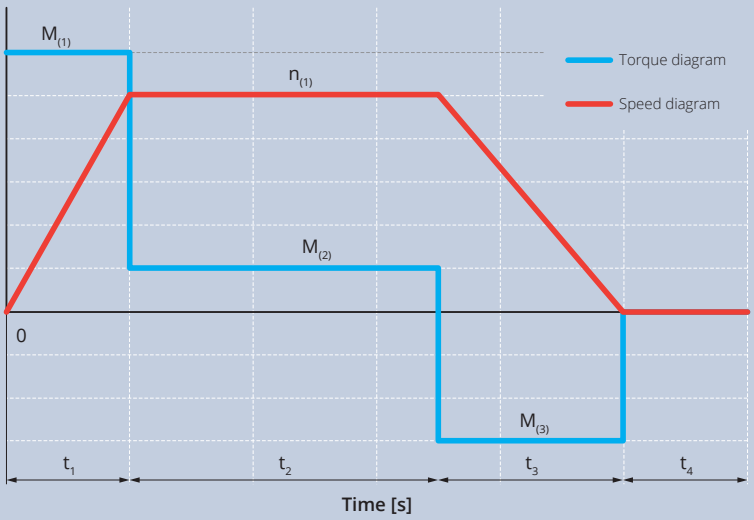

(a)	Equivalent torque	M_{EQU}	[Nm]	$M_{EQU} = \sqrt{\frac{M_{(1)}^2 \cdot t_1 + M_{(2)}^2 \cdot t_2 + \ldots + M_{(n)}^2 \cdot t_n}{t_1 + t_2 + \ldots + t_n}}$
(b)	Temperature adjustment factor	f_T	-	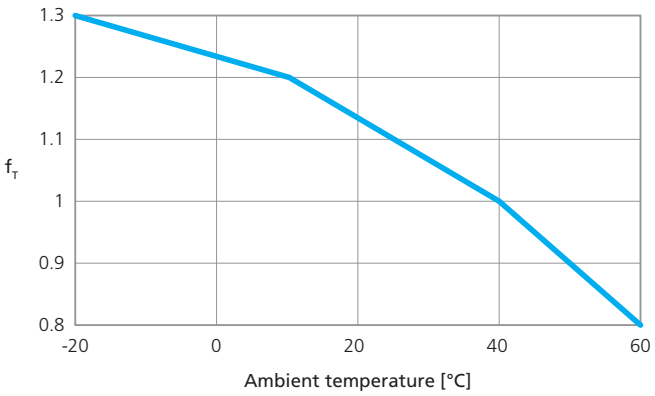
(c)	Altitude adjustment factor	f_H	-	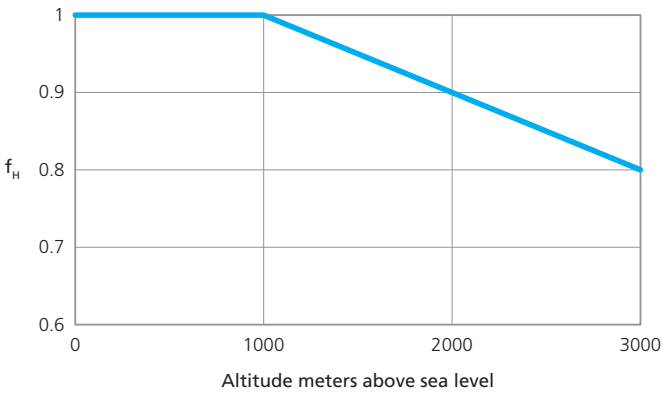

SERVOMOTOR SELECTION

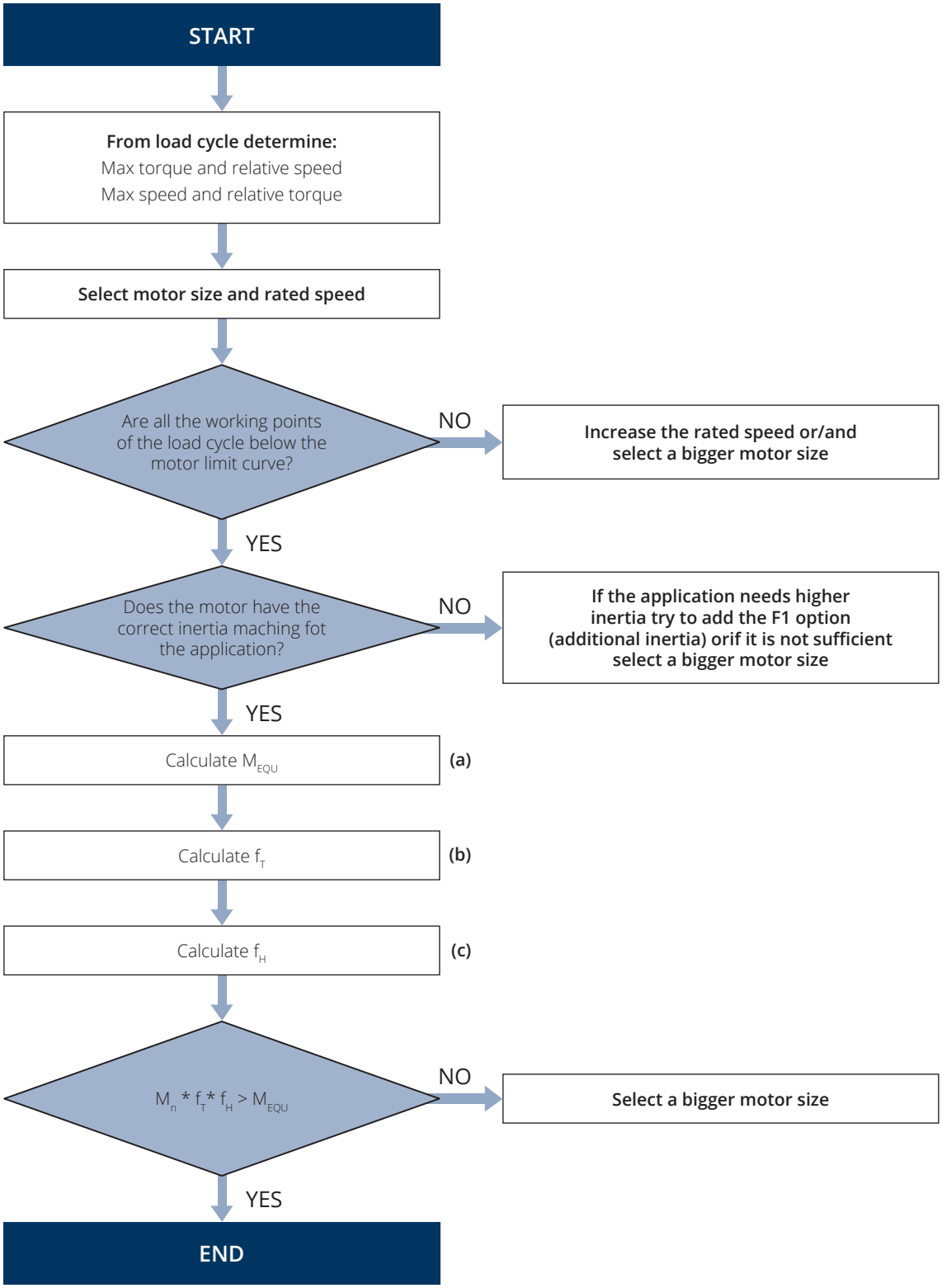

FEEDBACK SELECTION

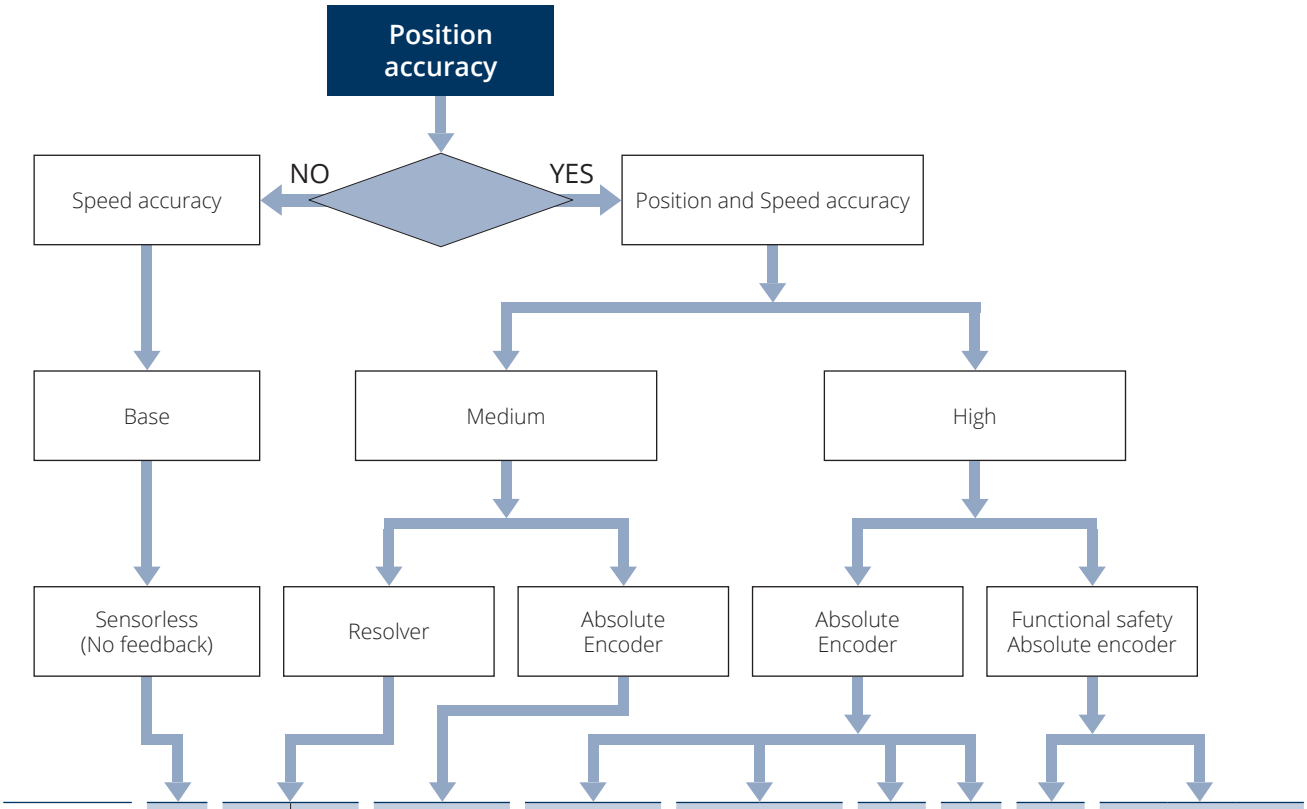

Interface	-	-	-	Hiperface		EnDat		Hiperface		Hiperface DSL	SinCos	EnDat	Hiperface DSL		
Feedback option	**SEN**	**RES1**[2]	**RES2**	**ENB5**	**ENB6**	**ENB1**	**ENB2**	**ENB3**	**ENB4**	**ENB9**	**ENB7**[2]	**ENB8**	**ENB10**	**ENB11**	**ENB12**
Periods per revolution	-	1	1	16	16	512[1] 2048[2]	512[1] 2048[2]	1024[1] 2048[2]	1024[1] 2048[2]	-	2048	-	-	-	-
Resolution available to position loop	-	12 bit[4]	12 bit[4]	9 bit[3]	9 bit[3]	13 bit[3]	13 bit[3]	12 bit[1][3] 15 bit[2][3]	12 bit[1][3] 15 bit[2][3]	15 bit[3]	16 bit[5]	19 bit[3]	17 bit[3]	20 bit[3]	24 bit[3]
Multi turn resolution	-	-	-	-	12 bit[3]	-	12 bit[3]	-	12 bit[3]	12 bit[3]	-	12 bit[3]	12 bit[3]	12 bit[3]	12 bit[3]
Functional Safety	No	No	No	No	No	No	No	No	No	No	No	Yes	Yes	Yes	Yes

1) Only for size BMD 65

2) Not available for motor size BMD 65

3) The information is supplied by the feedback device manufacturer. The values may change when mounted into motor and connected to a drive.

4) The output from the resolver is analog output. The resolution of the system is also determined by the analog to digital converter used. This resolution is obtained when used with the EM-RES-01/02 acquisition module.

5) The output is analog and the resolution of the system is also determined by the analog to digital converter used. This resolution is obtained when used with the EM-ABS-01 acquisition module.

FEEDBACK SELECTION

System overview: Encoder evaluation with Bonfiglioli inverters

Encoder	Protocol	AGL series	ACUx10 series, recommended module	ANG series	AXV series
RES1	Resolver (2 poles, 8 kHz)	n/a	EM-RES-03	Evaluation integrated	EMA-RES-01
RES2	Resolver (2 poles, 10 kHz)	n/a	EM-RES-01 or EM-RES-03	Evaluation integrated	EMA-RES-01
ENB1	EnDat 2.2 Single Turn (optical absolute)	n/a	EM-ABS-01[1)]	Evaluation integrated	EMA-SABS-21 EMA-ABS-01[1)]
ENB2	EnDat 2.2 Multi Turn (optical absolute)	n/a	EM-ABS-01[1)]	Evaluation integrated	EMA-SABS-21 EMA-ABS-01[1)]
ENB3	Hiperface Single Turn (optical absolute)	n/a	EM-ABS-01	Evaluation integrated	EMA-ABS-01
ENB4	Hiperface Multi Turn (optical absolute)	n/a	EM-ABS-01	Evaluation integrated	EMA-ABS-01
ENB5	Hiperface Single Turn (capacitive absolute)	n/a	EM-ABS-01	Evaluation integrated	EMA-ABS-01
ENB6	Hiperface Multi Turn (capacitive absolute)	n/a	EM-ABS-01	Evaluation integrated	EMA-ABS-01
ENB7	SinCos Single Turn (optical absolute)	n/a	EM-ABS-01	Evaluation integrated	EMA-ABS-01
ENB8	EnDat 2.2 Multi Turn Functional Safety (inductive absolute)	n/a	n/a	n/a	EMA-SABS-21[2)]
ENB9	Hiperface DSL (capacitive absolute)	n/a	n/a	n/a	EMA-SABS-11
ENB10	Hiperface DSL, Functional Safety (capacitive absolute)	n/a	n/a	n/a	EMA-SABS-11[2)]
ENB11	Hiperface DSL, Functional Safety (optical absolute)	n/a	n/a	n/a	EMA-SABS-11[2) 3)]
ENB12	Hiperface DSL, Functional Safety (optical absolute)	n/a	n/a	n/a	EMA-SABS-11[2)]
SEN		Supported	Supported, no module required	Supported	Supported, no module required

n/a = not available as combination

1) The encoder is equipped with SinCos tracks that are required for the motor control in this combination.

2) The full support for Functional Safety requires an AXV device with integrated Motion Functional Safety (SMA-MOT-11).

3) The encoders of the family EKx36 from Sick / ENB11 from Bonfiglioli may not be used in combination with AxiaVert SMA-MOT-11 for Functional Safety. The combination of EKx36 from Sick / ENB11 from Bonfiglioli can be used as a non-safe combination

Functional Safety – Safe Torque Off, Safe Stop 1 and Motion Safety

The frequency inverter series ACU, ANG and AXV offer Functional Safety including Safe Torque Off (STO), Safe Stop 1 (SS1) and high-performance functions particularly in AXV series including Safely Limited Speed (SLS), Safely Limited Position (SLP) and many more.

The different combinations of encoder, frequency inverter series and mounted module inside the frequency inverter can be used for the Functional safety functions as shown in the following table. The achievable Functional Safety levels are listed in the frequency inverter documentation.

Integrated Functional Safety function	Inverter series				
	ACU series ANG series AGL series	*AXV Basic Functional Safety* (incl. SMA-STO-11)	*AXV Standard Functional Safety* (incl. SMA-SS1-11)	*AXV Motion Functional Safety* (incl. SMA-MOT-11)[1]	*AXV Motion Functional Safety* (incl. SMA-MOT-11) & EM-SABS-xx[2,3]
STO - Safe Torque Off	•	•	•	•	•
SBC - Safe Brake Control		•	•	•	•
SS1 - Safe Stop 1 (t)	With external safety monitor	With external safety monitor	•	•	•
SS1 - Safe Stop 1 (r+t+d)				•	•
SS1 - Safe Stop 1 (r+d) (sensorless)				•	O
SS2 - Safe Stop 2 (r+t+d)					•
SOS - Safe Operating Stop					•
SLS - Safely Limited Speed					•
SLS - Safely Limited Speed (sensorless)				•	O
SLS-SL - Safely Limited Speed-Sliding Limit					•
SLS-SL - Safely Limited Speed-Sliding Limit (sensorless)				•	O
SDI - Safe Direction					•
SSM - Safe Speed Monitor					•
SSM - Safe Speed Monitor (sensorless)				•	O
SLP - Safely Limited Position					•
FSoE - Functional Safety over Ethercat				•	•

1) Applies if the combination of encoder and encoder evaluation is not considered to be functional safe.

2) Hiperface DSL: EM-SABS-11 module offers in combination with encoder versions ENB10, ENB11, ENB12.

3) EnDat 2.2: EM-SABS-21 module offers in combination with encoder version ENB8.

Note: All speed and Position related functions require for the achievement of the full Functional Safety level a motor encoder with a fitting Functional Safety level for the application. Encoders with lower Functional Safety level or without any Functional Safety level will typically result in a lower overall Functional Safety level.

- *supported*

O *In this combination the already present encoder module supports a functional safety encoder and could be used to achieve the higher performant Functional Safety level.*

DEGREE OF PROTECTION

BMD motors are manufactured with protection class IP65 or IP67 by selecting the basic variant “degree of protection” in the designation.

In accordance with IEC 60034-5:

IP	6	5

0		Not protected
1		Protected against extraneous solid bodies having Ø ≥ 50 mm
2		Protected against extraneous solid bodies having Ø ≥ 12.5 mm
3		Protected against extraneous solid bodies having Ø ≥ 2.5 mm
4		Protected against extraneous solid bodies having Ø ≥ 1.0 mm
5		Protected against dust
6		No dust ingress

0		Not protected
1		Protected against vertical water drips
2		Protected against vertical water drips inclined up to 15°
3	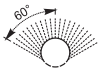	Protected against rain
4		Protected against water splashes
5	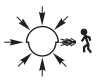	Protected against jets of water
6	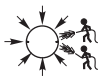	Protected against powerful jets of water
7		Protected against the effects of temporary immersion
8	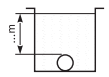	Protected against the effects of continuous immersion

BONFIGLIOLI PERMANENT MAGNET SYNCHRONOUS SERVOMOTORS RANGE

The Bonfiglioli permanent magnet synchronous servomotors are available in six sizes with stall torque between 0.85 ÷ 60 Nm.

Product Line Up
- Competitive technology
- Low inertia
- Highest dynamics
- High torque density
- Precision
- Compact design

BMD series
Stall Torque distribution

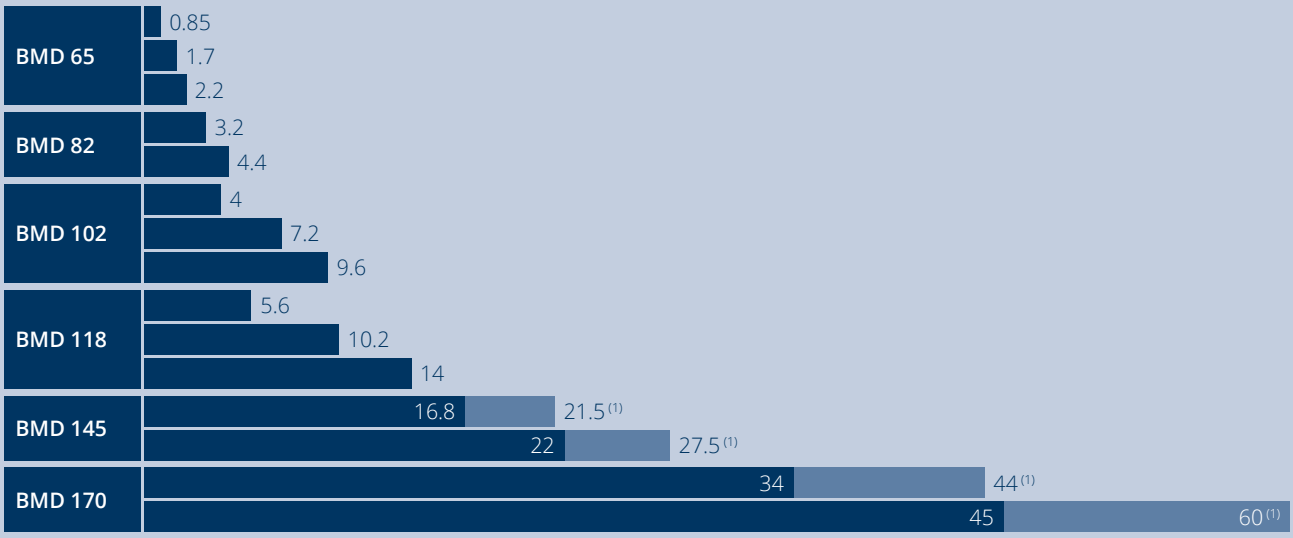

A brief overview of the available combinations of the basic variants such as motor size, motor stall torque, nominal voltage and nominal speed is reported in the following table.

		BMD 65			BMD 82		BMD 102			BMD 118			BMD 145			BMD 170				
		0.85	1.7	2.2	3.2	4.4	4	7.2	9.6	5.6	10.2	14	16.8	21.5(1)	22	27.5(1)	34	44(1)	45	60(1)
400 V	1600 rpm		X	X	X	X	X	X	X	X	X	X	X	X	X	X	X	X	X	X
	3000 rpm	X	X	X	X	X	X	X	X	X	X	X	X	X	X	X	X	X	X	X
	4500 rpm	X	X	X	X	X	X	X	X	X	X	X	X	X	X	X				
	5500 rpm	X	X	X	X	X	X	X	X	X	X	X	X	X	X					
	6000 rpm	X	X	X	X	X	X	X	X	X	X	X	X							
230 V	1600 rpm	X	X	X	X	X	X	X	X	X	X	X	X	X	X	X	X	X		
	3000 rpm	X	X	X	X	X	X	X	X	X	X	X	X	X	X		X	X		
	4500 rpm	X	X	X	X	X	X	X	X	X	X									
	5500 rpm	X	X	X	X	X	X	X	X	X	X									
	6000 rpm	X	X	X	X	X	X	X	X	X										

(1) Motor with forced ventilation option

PRODUCT DESIGNATION OF BONFIGLIOLI SERVOMOTORS

BASIC VARIANTS

BMD | **145** | **22** | **3000** | **400** | **165** | **24** | **K** | **65**

Degree of protection
- **65** IP65
- **67** IP67

Shaft keway
- **K** with key
- **NK** without key

Shaft diameter
- **9** size 65
- **11** size 65, 82
- **14** size 82
- **19** size 82, 102, 118, 145
- **24** size 102, 118, 145, 170
- **28** size 118, 145, 170
- **32** size 170

Flange (1)
- **63** size 65
- **75** size 65
- **100** size 82, 102
- **115** size 82, 102
- **130** size 118
- **130S** size 118
- **165** size 118, 145, 170

Motor AC voltage (2)
- **230**
- **400**

Motor rated speed (2)
- **1600** (min^{-1})
- **3000** (min^{-1})
- **4500** (min^{-1})
- **5500** (min^{-1})
- **6000** (min^{-1})

Motor stall torque
- **0.85** (Nm) size 65
- **1.7** (Nm) size 65
- **2.2** (Nm) size 65
- **3.2** (Nm) size 82
- **4.4** (Nm) size 82
- **4** (Nm) size 102
- **7.2** (Nm) size 102
- **9.6** (Nm) size 102
- **5.6** (Nm) size 118
- **10.2** (Nm) size 118
- **14** (Nm) size 118
- **16.8** (Nm) size 145
- **22** (Nm) size 145
- **34** (Nm) size 170
- **45** (Nm) size 170

Motor size
65, 82, 102, 118, 145, 170

Series
BMD

Notes:
(1) M flange dimension, see page 20
(2) For available motor AC voltage and speed combinations refer to general overview of page 17
(3) Not available for motor size BMD 65
(4) BMD 145 & 170 only. Not compatible with UL certification (CUS option).
(5) Standard length 1 meter, for different lengths please contact us
(6) Power and signal connections not available separately for the feedback device ENB9...ENB12. Only hybrid connection.
(7) Hybrid connections available for feedback devices ENB8 (sizes 65...145), ENB9...ENB12 (all sizes).
(8) Not available for feedback device ENB8
(9) Not available for motor size BMD 170
(10) Not available with hybrid connections and feedback device ENB8

OPTIONAL VARIANTS

PTC | RES1 | P1 | S1 | F24 | CUS | V1R

Forced ventilation [4]

(blank)	no forced ventilation (default)
V1R	24V DC IP 54 angled rotatable receptacle
V1S	24V DC IP 54 straight receptacle
V2R	230V AC IP 54 angled rotatable receptacle
V2S	230V AC IP 54 straight receptacle

Certified execution

(blank)	CE
CUS	UL

Brake/Flywheel

(blank)	no brake nor flywheel (default)
F24	brake 24 Vdc
F1	additional flywheel / inertia

Signal connections [6]

(blank)	Sensorless version (no feedback device) or hybrid connection
S1	Angled rotatable receptacle, with plug
S1N	Angled rotatable receptacle, without plug
S2 [3] [5]	Cable with flying leads, without connector
S2C [3] [5]	Cable with SubD connector
S3	Straight receptacle, with plug
S3N	Straight receptacle, without plug

Power connections [6]

P1	Angled rotatable receptacle, with plug
P1N	Angled rotatable receptacle, without plug
P2 [3] [5]	Cable with flying leads, without connector
P3	Straight receptacle, with plug
P3N	Straight receptacle, without plug

Hybrid connections (power and encoder signals) [7]

H1	Angled rotatable hybrid receptacle, with plug
H1N	Angled rotatable hybrid receptacle, without plug
H2 [5] [8]	Hybrid cable with flying leads, without connector
H2C [5] [8]	Hybrid cable with flying leads and SubD connector
H3 [9]	Straight hybrid receptacle, with plug
H3N [9]	Straight hybrid receptacle, without plug

Feedback device

RES1 [3]	2 poles resolver 8 kHz
RES2	2 poles resolver 10 kHz
ENB1	Optical absolute encoder EnDat interface Single Turn
ENB2	Optical absolute encoder EnDat interface Multi Turn
ENB3	Optical absolute encoder Hiperface interface Single Turn
ENB4	Optical absolute encoder Hiperface interface Multi Turn
ENB5	Capacitive absolute encoder Hiperface interface Single Turn
ENB6	Capacitive absolute encoder Hiperface interface Multi Turn
ENB7 [3]	Optical SinCos absolute encoder Single Turn
ENB8	Inductive absolute encoder EnDat Interface Multi Turn Functional Safety
ENB9	Capacitive absolute encoder Hiperface DSL Interface Multi Turn
ENB10	Capacitive absolute encoder Hiperface DSL Interface Multi Turn Functional Safety
ENB11	Optical absolute encoder Hiperface DSL Interface Multi Turn Functional Safety
ENB12	Optical absolute encoder Hiperface DSL Interface Multi Turn Functional Safety
SEN	Sensorless

Thermal protection

PTC [10]	Thermistor PTC 150
KTY	Silicon sensor type KTY84-130
TC1	Platinum sensor PT1000

FIXING DIMENSIONS

The fixing dimensions include both, flange and shaft that are defined by catalogue variants. The flanges and the shafts dimensions comply with the IEC 60072-1 standard.

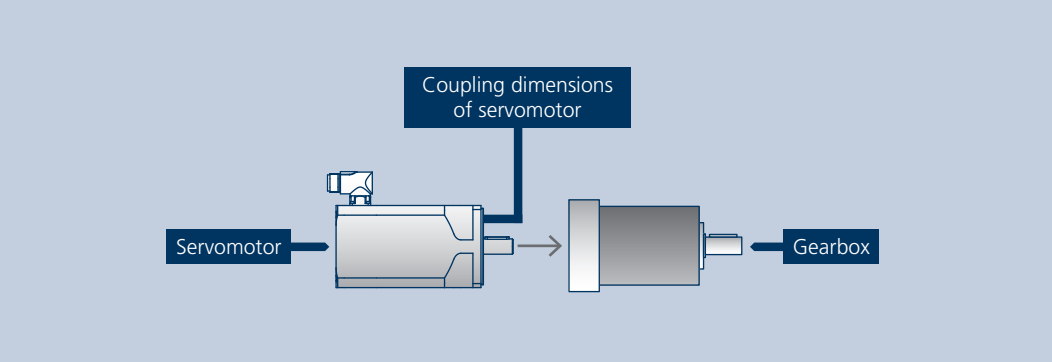

According to IEC 60072-1, the interface geometry is defined by quantities D, E, P, M, N, S showed in the following drawings.

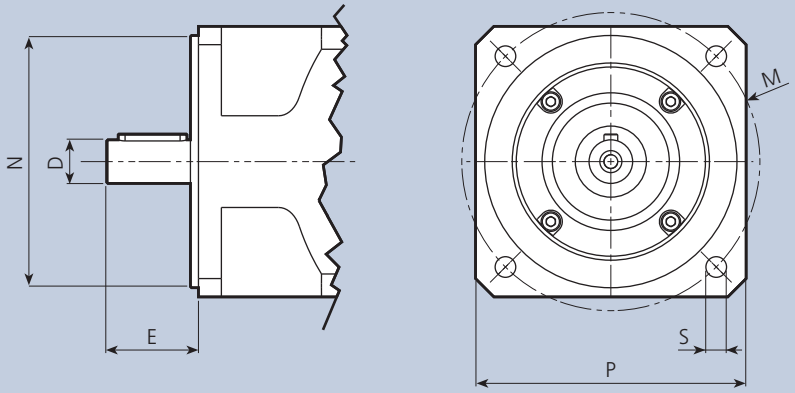

		Servomotors										
		BMD65		BMD82		BMD102		BMD118			BMD145	BMD170
Shaft diameter x shaft length	DxE	9x20 11x23		11x23 14x30 19x40		19x40 24x50		19x40 24x50 28x60			19x40 24x50 28x60	24x50 28x60 32x60
Flange square	P	65	65	82	100	102	102	118	118	145	145	170
Flange pitch holes diameter	M	63	75	100	115	100	115	130 (1)	130	165	165	165
Diameter of the spigot	N	40	60	80	95	80	95	95	110	130	130	130
Fixing holes diameters	S	5.8	5.8	6.5	9	7	9	9	9	12	12	12

Notes:
(1) Flange variant 130S

MECHANICAL TOLERANCES

Dimensions and tolerances of shaft extension, key and flange are in accordance with IEC 60072-1.
Shaft extension features an axial threaded hole in accordance with UNI 3221, DIN 332.
Tolerances of the different parts are reported in the table.

Component		Dimensions	Tolerance
Shaft end	D	Ø 9 - 28	j6
		Ø 32	k6
Key	F		h9
Flange	N	Ø < 250	j6

BEARINGS

BMD servomotors are provided with radial ball bearings, lubricated for life with grease and axially pre-loaded. The types of bearings in use are listed in the following table.

Size	Drive end	Non drive end
BMD 65	6201 2RS	6001 2RS
BMD 82	6205 2RS	6203 2RS
BMD 102	6205 2RS	6204 2RS
BMD 118	6206 2RS	6205 2RS
BMD 145	6206 2RS	6305 2RS
BMD 170	6208 2RS	6305 2RS

SHAFT LOADS

The maximum radial load (F_R) and maximum axial load (F_A) are computed using ISO 281 calculation L_{10h} assuming a bearing life of 20.000h. The load and the speed are assumed to be constant throughout the bearing life.

The maximum radial load is reported as a function of the distance (X) between flange plane and the point of force applicaton. The fatigue limit for the radial load is computed for each size assuming the smallest shaft diameter catalogue (e.g. 11mm for BMD 82). The maximum radial loads F_R are valid only for motor without additional axial load.

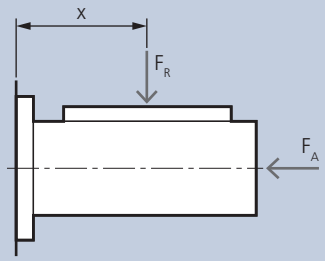

Maximum axial load (F_R=0)

Size	Speed [min^{-1}]					
	[Nm]	1600	3000	4500	5500	6000
BMD 65	0.85	59	48	42	39	38
	1.7	65	53	46	43	42
	2.2	69	56	49	46	44
BMD 82	3.2	115	94	82	77	75
	4.4	120	100	85	81	79
BMD 102	4	140	110	100	95	90
	7.2	150	120	105	100	95
	9.6	160	130	110	105	100
BMD 118	5.6	150	132	114	109	104
	10.2	170	139	121	115	110
	14	180	145	130	120	115
BMD 145	16.8	280	230	200	185	180
	22	295	240	210	195	
BMD 170	34	300	270			
	45	320	290			

Maximum radial load (F_A=0)

Curves parameterized according to motor nominal speed.

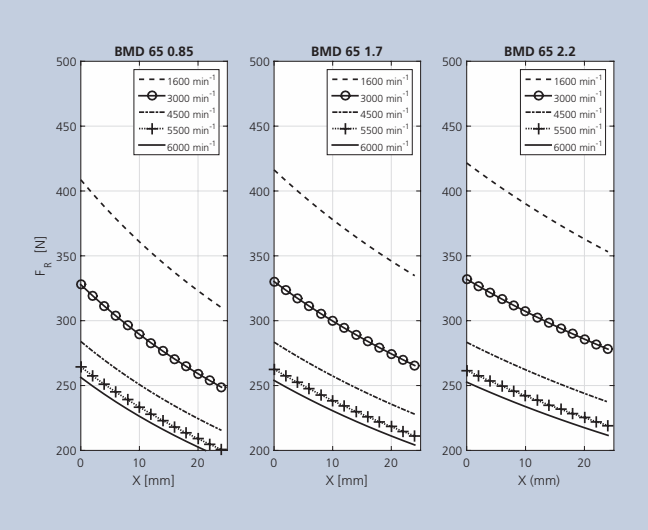

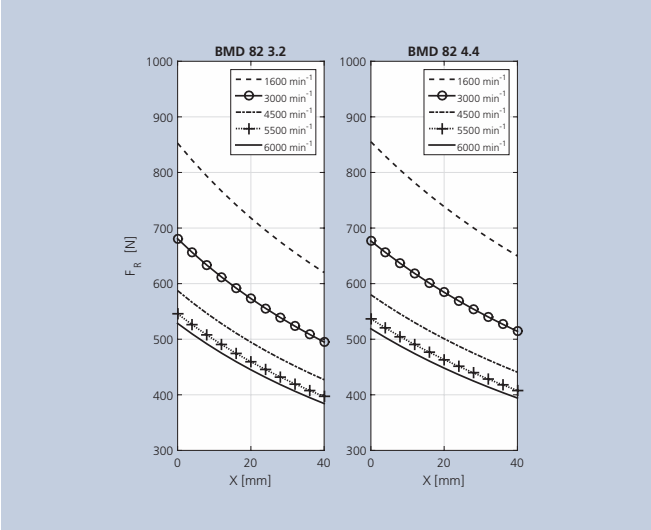

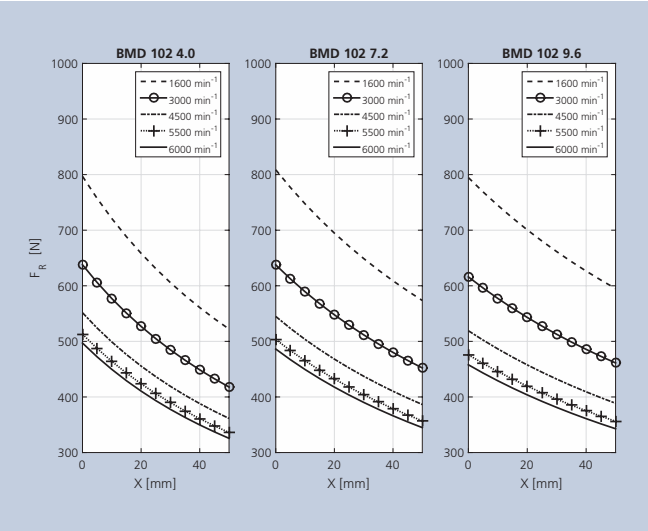

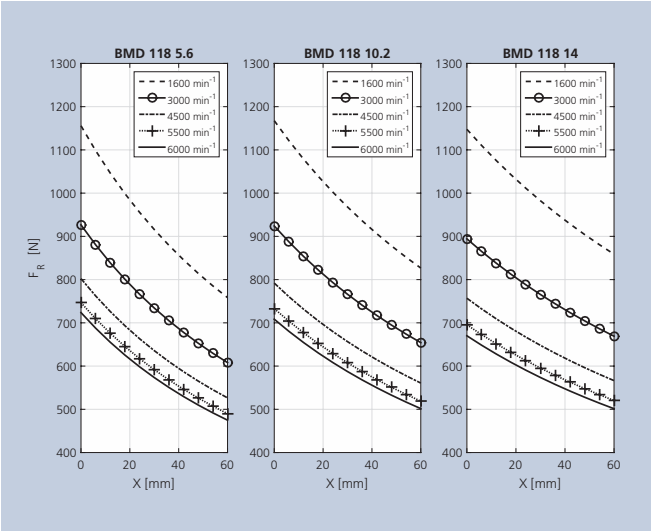

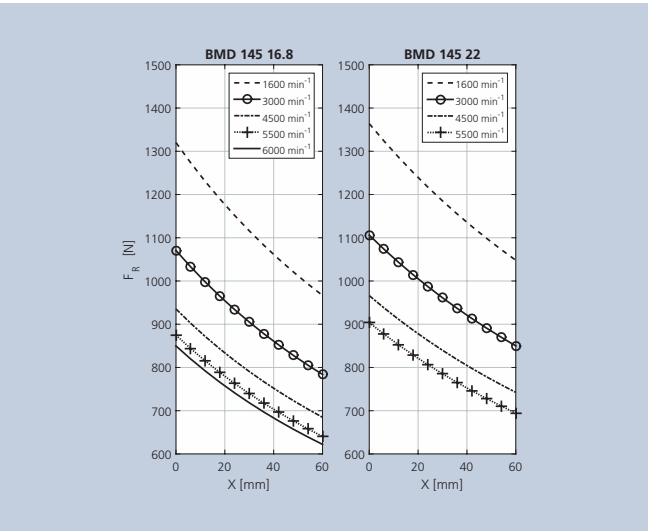

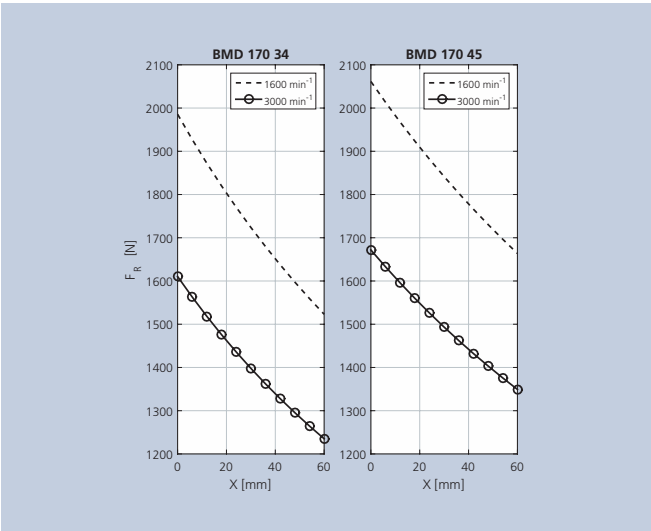

BMD 65 • Ratings

			BMD 65 0.85 Nm					BMD 65 1.7 Nm					BMD 65 2.2 Nm				
	M_0	[Nm]	0.85					1.70					2.20				
	M_n	[Nm]	0.83	0.80	0.76	0.74	0.73	1.65	1.60	1.52	1.48	1.45	2.12	2.05	1.95	1.85	1.80
	n	[min^{-1}]	1600	3000	4500	5500	6000	1600	3000	4500	5500	6000	1600	3000	4500	5500	6000
	f_n	[Hz]	107	200	300	367	400	107	200	300	367	400	107	200	300	367	400
	P_n	[kW]	0.14	0.25	0.36	0.43	0.46	0.28	0.50	0.72	0.85	0.91	0.36	0.64	0.92	1.07	1.13
	M_{max}	[Nm]	2.55					4.90					6.20				
	2p	[-]	8					8					8				
	J	[$Kgm^2 \cdot 10^{-4}$]	0.2					0.4					0.6				
	τ_{el}	[ms]	3					3					3				
	τ_{therm}	[min]	14					20					26				
	m_M	[kg]	1.3					1.9					2.6				
230 Vac	V_n	[V_{AC}]	168	181	172	179	177	193	180	180	174	171	179	180	191	192	190
	I_0	[A]	0.77	1.23	1.93	2.18	2.39	1.26	2.34	3.40	4.20	4.70	1.70	2.96	4.10	4.90	5.40
	I_n	[A]	0.74	1.16	1.74	1.92	2.09	1.25	2.30	3.20	3.90	4.20	1.65	2.78	3.60	4.10	4.40
	I_{max}	[A]	2.50	3.90	6.20	7.00	7.70	4.30	8.00	11.5	14.5	15.9	5.40	9.40	12.9	15.6	17.1
	K_e	[mV/min^{-1}]	75	47	30	27	24	89	48	33	26	24	90	52	38	31	28
	K_T	[Nm/A]	1.10	0.69	0.44	0.39	0.36	1.35	0.73	0.50	0.40	0.36	1.29	0.74	0.54	0.45	0.41
	R_{pp}	[Ω]	48.4	19.2	7.75	6.10	5.04	30.4	8.79	4.19	2.66	2.20	18.8	6.21	3.27	2.26	1.86
	L_{pp}	[mH]	145	57.5	23.2	18.3	15.1	91.9	26.6	12.6	8.00	6.60	56.9	18.8	9.90	6.80	5.60
400 Vac	V_n	[V_{AC}]	-	295	331	318	306	336	311	308	316	300	285	314	314	328	313
	I_0	[A]	-	0.76	0.98	1.23	1.38	0.72	1.35	1.98	2.34	2.68	1.07	1.70	2.48	2.88	3.27
	I_n	[A]	-	0.72	0.88	1.08	1.21	0.72	1.33	1.85	2.14	2.43	1.04	1.60	2.20	2.41	2.68
	I_{max}	[A]	-	2.43	3.10	3.90	4.40	2.46	4.60	6.70	8.00	9.10	3.40	5.40	7.90	9.10	10.4
	K_e	[mV/min^{-1}]	-	76	59	47	42	155	83	57	48	42	143	90	62	53	47
	K_T	[Nm/A]	-	1.12	0.87	0.69	0.62	2.36	1.26	0.86	0.73	0.63	2.06	1.29	0.89	0.76	0.67
	R_{pp}	[Ω]	-	50.0	30.3	19.2	15.1	92.3	26.3	12.2	8.79	6.65	47.6	18.8	8.82	6.56	5.08
	L_{pp}	[mH]	-	150	90.7	57.5	45.2	279	79.5	37.0	26.6	20.1	144	56.9	26.7	19.8	15.4
F24	Mb	[Nm]	2					2					2				
	Δm_M	[kg]	0.2					0.2					0.2				
	ΔJ	[$Kgm^2 \cdot 10^{-4}$]	0.1					0.1					0.1				
F1	Δm_M	[kg]	0.4					0.4					0.4				
	ΔJ	[$Kgm^2 \cdot 10^{-4}$]	0.5					0.5					0.5				

BMD 65 • Dimensions

P1-S1 VARIANT

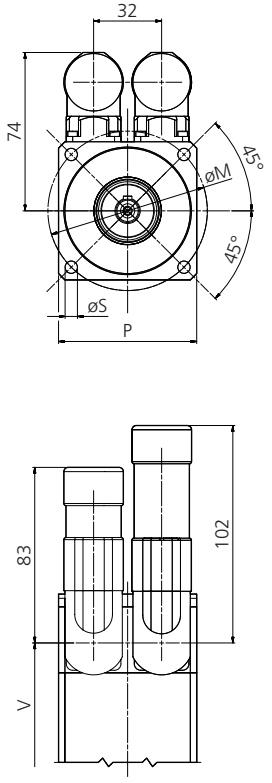

P2 VARIANT

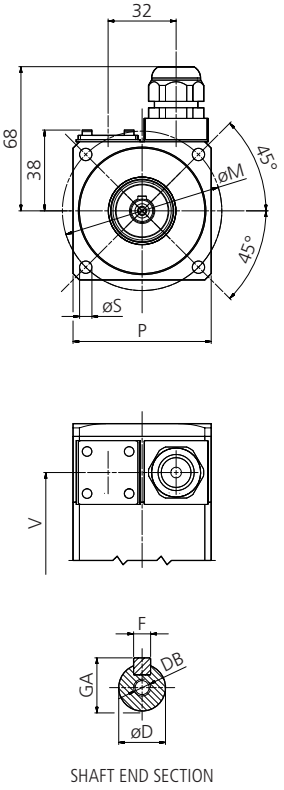

SHAFT END SECTION

P3-S3 VARIANT

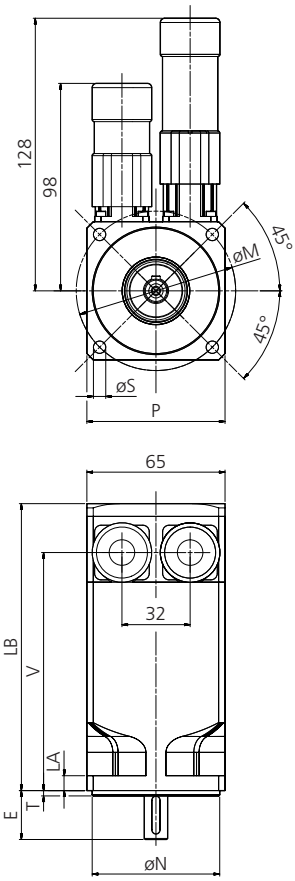

P1N-S1N VARIANT

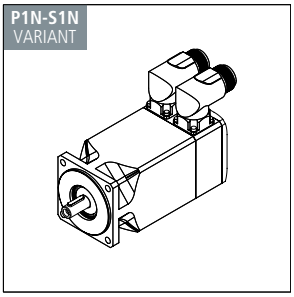

P2 VARIANT

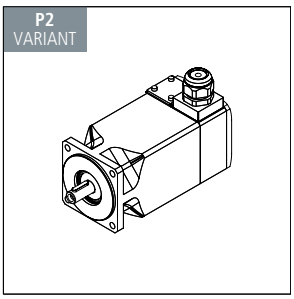

P3N-S3N VARIANT

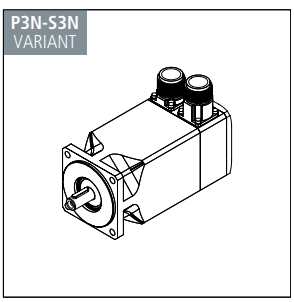

B5 Flange variant						
Flange variant	P	M	N	S	T	LA
63	65	63	40	5.8	2.5	7
75	65	75	60	5.8	2.5	7

Shaft diameter variant					
Shaft diameter	D	E	DB	GA (1)	F (1)
9	9	20	M3	10.2	3
11	11	23	M4	12.5	4

Motor length depending on the option

Dimension V

Torque	Without Brake or Flyweel			With Brake or Flyweel **F24/F1** options		
	Feedback Variants			Feedback Variants		
M_0	RES2/SEN	ENB1/ENB2	ENB3...ENB6/ENB8/ENB9...ENB12	RES2/SEN	ENB1/ENB2	ENB3...ENB6/ENB8/ENB9...ENB12
0,85	89	89	89	89	138	138
1,7	112	112	112	112	161	161
2,2	138	138	138	138	187	187

Dimension LB

Torque	Without Brake or Flyweel			With Brake or Flyweel **F24/F1** options		
	Feedback Variants			Feedback Variants		
M_0	RES2/ENB8	ENB1/ENB2	ENB3...ENB6/ENB9...ENB12	RES2/SEN	ENB1...ENB6/ENB9...ENB12	ENB8
0,85	112	130	130	143	179	161
1,7	135	153	153	166	202	184
2,2	161	179	179	192	228	210

Notes:
(1) Motor shaft extension without key available.

BMD 82 • Ratings

			BMD 82 3.2 Nm					BMD 82 4.4 Nm				
	M_0	[Nm]	3.20					4.40				
	M_n	[Nm]	3.15	3.00	2.80	2.60	2.50	4.20	3.80	3.55	3.30	3.15
	n	[min^{-1}]	1600	3000	4500	5500	6000	1600	3000	4500	5500	6000
	f_n	[Hz]	107	200	300	367	400	107	200	300	367	400
	P_n	[kW]	0.53	0.94	1.32	1.50	1.57	0.70	1.19	1.67	1.90	2.00
	M_{max}	[Nm]	8.50					11.5				
	2p	[-]	8					8				
	J	[$Kgm^2 \cdot 10^{-4}$]	1.4					1.7				
	τ_{el}	[ms]	5.7					5.7				
	τ_{therm}	[min]	26					33				
	m_M	[kg]	3.5					4.6				
230 Vac	V_n	[V_{AC}]	191	181	200	176	176	181	184	188	196	197
	I_0	[A]	2.41	4.50	6.00	8.30	9.00	3.30	5.80	8.40	9.70	10.6
	I_n	[A]	2.37	4.30	5.30	7.00	7.60	3.10	5.10	6.80	7.30	7.60
	I_{max}	[A]	8.30	15.5	20.6	28.4	31	9.80	17.4	25.1	29.2	32.0
	K_e	[mV/min^{-1}]	92	49	37	27	24	93	52	36	31	29
	K_T	[Nm/A]	1.33	0.71	0.53	0.39	0.35	1.35	0.76	0.53	0.45	0.42
	R_{pp}	[Ω]	11.3	3.23	1.81	0.96	0.81	6.89	2.19	1.05	0.78	0.66
	L_{pp}	[mH]	64.2	18.3	10.3	5.40	4.60	39.0	12.4	6.00	4.40	3.70
400 Vac	V_n	[V_{AC}]	332	315	312	323	308	315	323	328	335	335
	I_0	[A]	1.39	2.60	3.90	4.50	5.20	1.88	3.30	4.80	5.70	6.20
	I_n	[A]	1.36	2.50	3.40	3.80	4.30	1.76	2.90	3.90	4.30	4.50
	I_{max}	[A]	4.70	8.90	13.2	15.5	17.7	5.60	9.90	14.4	17.1	18.6
	K_e	[mV/min^{-1}]	159	85	57	49	43	161	92	63	53	49
	K_T	[Nm/A]	2.31	1.23	0.83	0.71	0.62	2.34	1.33	0.92	0.77	0.71
	R_{pp}	[Ω]	34.3	9.75	4.42	3.23	2.47	20.8	6.77	3.21	2.26	1.92
	L_{pp}	[mH]	194	55.2	25.0	18.3	14.0	118	38.3	18.1	12.8	10.8
F24	Mb	[Nm]	4.5					4.5				
	Δm_M	[kg]	0.6					0.6				
	ΔJ	[$Kgm^2 \cdot 10^{-4}$]	0.2					0.2				
F1	Δm_M	[kg]	1					1				
	ΔJ	[$Kgm^2 \cdot 10^{-4}$]	3					3				

BMD 82 • Dimensions

P1-S1 VARIANT

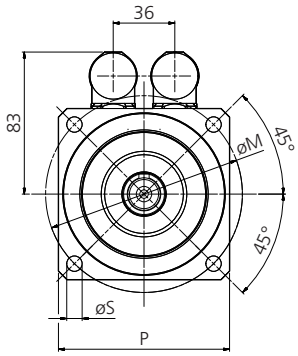

P2 S2 VARIANT

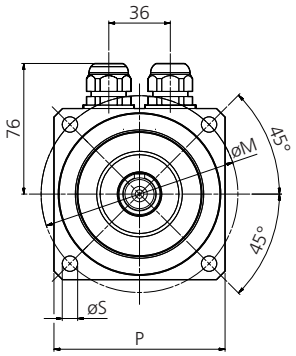

P3-S3 VARIANT

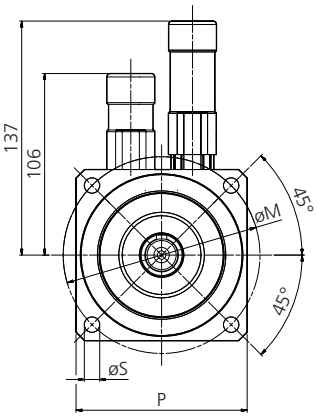

P1N-S1N VARIANT

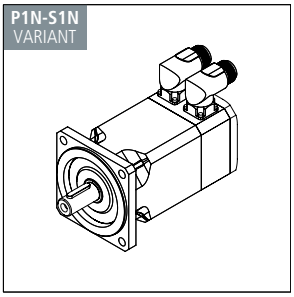

P2 S2 VARIANT

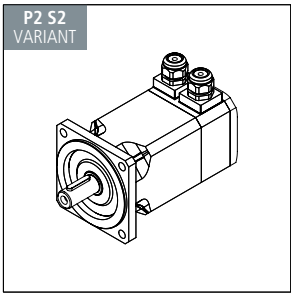

P3N-S3N VARIANT

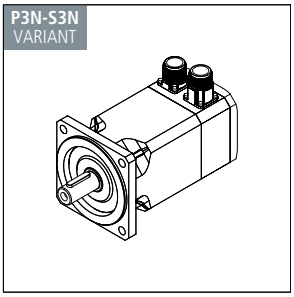

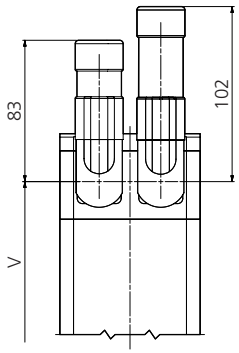

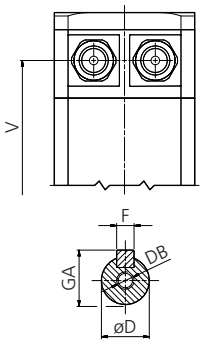

SHAFT END SECTION

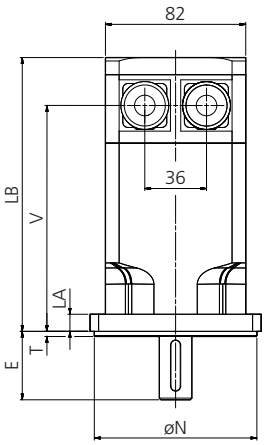

B5 Flange variant						
Flange variant	P	M	N	S	T	LA
100	82	100	80	6.5	3	10
115	100	115	95	9	3	10

Shaft diameter variant					
Shaft diameter	D	E	DB	GA (1)	F (1)
11	11	23	M4	12.5	4
14	14	30	M5	16	5
19	19	40	M6	21.5	6

Motor length depending on the option

Dimension V

Torque	Without Brake or Flyweel			With Brake or Flyweel **F24/F1** options		
	Feedback Variants			Feedback Variants		
M_0	RES1/RES2/SEN	ENB1/ENB2/ENB7/ENB11/ENB12	ENB3...ENB6/ENB8/ENB9...ENB10	RES1/RES2/SEN	RES1/RES2/SEN/ENB8	ENB1...ENB9
3.2	132	132	132	132	195	218
4.4	152	152	152	152	215	238

Dimension LB

Torque	Without Brake or Flyweel			With Brake or Flyweel **F24/F1** options		
	Feedback Variants			Feedback Variants		
M_0	RES1/RES2/SEN	ENB1/ENB2/ENB7/ENB11/ENB12	ENB3...ENB6/ENB8/ENB9...ENB10	RES1/RES2/SEN/ENB8	ENB1...ENB9	ENB11/ENB12
3.2	160	183	160	200	223	246
4.4	180	203	180	220	243	266

Notes:
(1) Motor shaft extension without key available.

BMD 102 • Ratings

			BMD 102 4 Nm					BMD 102 7.2 Nm					BMD 102 9.6 Nm				
	M_0	[Nm]	4.00					7.20					9.60				
	M_n	[Nm]	3.70	3.40	3.10	2.90	2.80	7.00	6.70	6.00	5.80	5.60	9.20	8.50	7.70	6.90	6.50
	n	[min^{-1}]	1600	3000	4500	5500	6000	1600	3000	4500	5500	6000	1600	3000	4500	5500	6000
	f_n	[Hz]	107	200	300	367	400	107	200	300	367	400	107	200	300	367	400
	P_n	[kW]	0.62	1.01	1.46	1.67	1.76	1.17	2.10	2.83	3.30	3.50	1.54	2.70	3.60	4.00	4.10
	M_{max}	[Nm]	11.0					21.0					28.0				
	2p	[-]	8					8					8				
	J	[$Kgm^2 \cdot 10^{-4}$]	1.9					3.4					4.7				
	τ_{el}	[ms]	8.4					8.4					8.4				
	τ_{therm}	[min]	25					31					38				
	m_M	[kg]	4.2					5.8					7.4				
230 Vac	V_n	[V_{AC}]	184	177	177	181	174	187	177	182	183	185	183	184	187	192	190
	I_0	[A]	3.03	5.73	8.82	10.0	11.4	5.00	9.70	13.9	16.9	18.2	6.30	11.5	16.8	19.8	21.8
	I_n	[A]	2.60	4.86	6.88	7.40	8.29	4.90	9.50	12.6	14.4	15.4	6.00	10.2	13.5	14.3	14.8
	I_{max}	[A]	9.30	17.6	27.3	30.7	35.1	18.3	35.0	51.0	61.0	66.0	20.4	37.0	54.0	64.0	70.0
	K_e	[mV/min^{-1}]	94	50	32	28	25	94	49	34	28	26	102	56	38	33	30
	K_T	[Nm/A]	1.32	0.70	0.45	0.40	0.35	1.43	0.75	0.52	0.43	0.40	1.52	0.84	0.57	0.48	0.44
	R_{pp}	[Ω]	8.38	2.39	1.02	0.76	0.59	3.02	0.82	0.40	0.27	0.23	2.24	0.68	0.32	0.23	0.19
	L_{pp}	[mH]	70.5	20.1	8.58	6.40	4.96	25.4	6.90	3.30	2.30	1.90	18.8	5.70	2.70	1.90	1.60
400 Vac	V_n	[V_{AC}]	314	305	303	319	314	320	311	305	320	305	318	324	323	332	333
	I_0	[A]	1.77	3.30	4.90	5.68	6.30	2.94	5.50	8.30	9.70	11.0	3.60	6.50	9.70	11.5	12.4
	I_n	[A]	1.52	2.83	3.80	4.20	4.60	2.92	5.40	7.50	8.20	9.30	3.40	5.80	7.80	8.30	8.40
	I_{max}	[A]	5.48	10.2	15.0	17.6	19.0	10.7	20.0	30.0	35.0	40.0	11.7	21.0	31.0	37.0	40.0
	K_e	[mV/min^{-1}]	160	86	57	49	43	161	86	57	49	43	177	99	66	56	52
	K_T	[Nm/A]	2.26	1.21	0.82	0.70	0.63	2.45	1.31	0.87	0.75	0.65	2.65	1.48	0.99	0.84	0.77
	R_{pp}	[Ω]	24.0	7.05	3.27	2.39	2.00	8.87	2.53	1.11	0.82	0.63	6.77	2.11	0.95	0.68	0.58
	L_{pp}	[mH]	202	59.3	27.5	20.1	16.8	74.7	21.3	9.40	6.90	5.30	56.8	17.7	8.00	5.70	4.80
F24	Mb	[Nm]	9					9					9				
	Δm_M	[kg]	1.1					1.1					1.1				
	ΔJ	[$Kgm^2 \cdot 10^{-4}$]	0.5					0.5					0.5				
F1	Δm_M	[kg]	1.7					1.7					1.7				
	ΔJ	[$Kgm^2 \cdot 10^{-4}$]	7.5					7.5					7.5				

BMD 102 • Dimensions

P1-S1 VARIANT

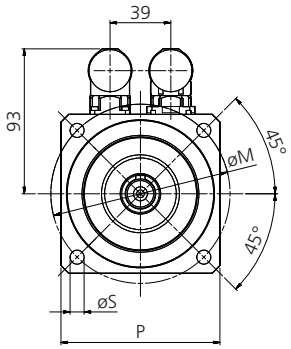

P2 S2 VARIANT

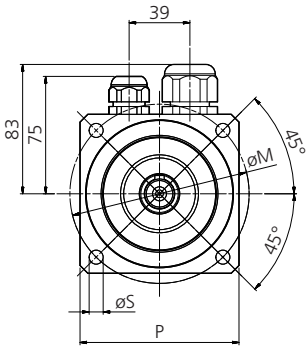

P3-S3 VARIANT

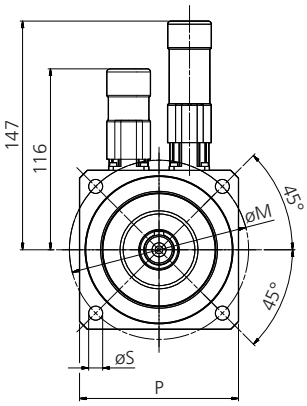

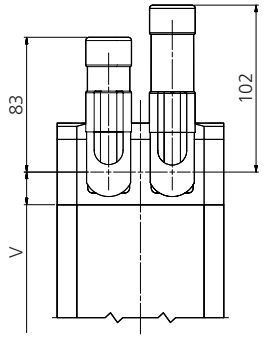

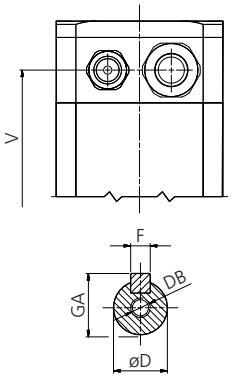

SHAFT END SECTION

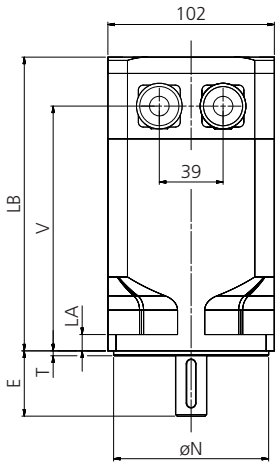

P1N-S1N VARIANT

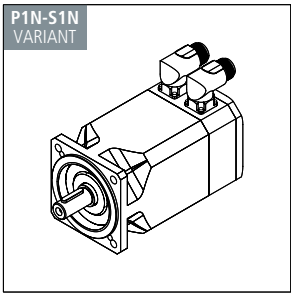

P2 S2 VARIANT

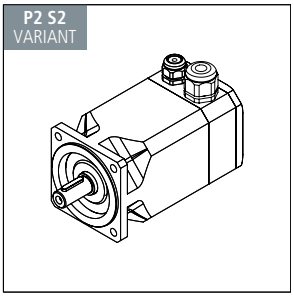

P3N-S3N VARIANT

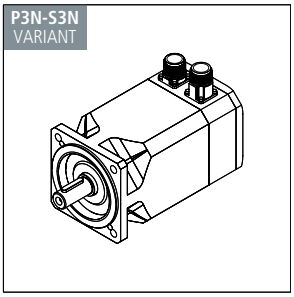

B5 Flange variant						
Flange variant	P	M	N	S	T	LA
100	102	100	80	7	3	10
115	102	115	95	9	3	10

Shaft diameter variant					
Shaft diameter	D	E	DB	GA (1)	F (1)
19	19	40	M6	21.5	6
24	24	50	M8	27	8

Motor length depending on the option

Dimension V

Torque	Without Brake or Flyweel			With Brake or Flyweel **F24/F1** options		
	Feedback Variants			Feedback Variants		
M_0	RES1/RES2/SEN	ENB1/ENB2/ENB7/ENB9...ENB12	ENB3...ENB6/ENB8	RES1/RES2/SEN	ENB1/ENB2/ENB7/ENB9...ENB12	ENB3...ENB6/ENB8
4	123	123	123	123	163	163
16	150	150	150	150	190	190
9.6	177	177	177	177	217	217

Dimension LB

Torque	Without Brake or Flyweel			With Brake or Flyweel **F24/F1** options		
	Feedback Variants			Feedback Variants		
M_0	RES1/RES2/SEN	ENB1/ENB2/ENB7/ENB9...ENB12	ENB3...ENB6/ENB8	RES1/RES2/SEN	ENB1/ENB2/ENB7/ENB9...ENB12	ENB3...ENB6/ENB8
4	153	176	153	193	216	193
7.2	180	203	180	220	243	220
9.6	207	230	207	247	297	247

Notes:
(1) Motor shaft extension without key available.

BMD 118 • Ratings

			BMD 118 5.6 Nm					BMD 118 10.2 Nm					BMD 118 14 Nm				
	M_0	[Nm]	5.60					10.2					14.0				
	M_n	[Nm]	5.50	5.10	4.60	4.10	3.90	10.0	9.50	8.50	8.00	7.50	13.3	12.2	10.9	9.70	9.00
	n	[min^{-1}]	1600	3000	4500	5500	6000	1600	3000	4500	5500	6000	1600	3000	4500	5500	6000
	f_n	[Hz]	107	200	300	367	400	107	200	300	367	400	107	200	300	367	400
	P_n	[kW]	0.92	1.60	2.18	2.36	2.45	1.68	3.00	4.00	4.60	4.70	2.20	3.80	5.00	5.30	5.30
	M_{max}	[Nm]	15.0					30.0					39.0				
	2p	[-]	8					8					8				
	J	[$Kgm^2 \cdot 10^{-4}$]	4.5					7.8					9.9				
	τ_{el}	[ms]	13					13					13				
	τ_{therm}	[min]	28					34					42				
	m_M	[kg]	7.7					9.7					11.7				
230 Vac	V_n	[V_{AC}]	179	185	180	186	171	184	178	174	196	-	184	192	-	-	-
	I_0	[A]	4.20	7.30	11.2	13.2	15.6	7.20	13.7	20.8	22.6	-	9.20	16.3	-	-	-
	I_n	[A]	3.80	6.60	9.00	9.30	10.3	7.20	13.5	18.3	17.4	-	8.60	14.0	-	-	-
	I_{max}	[A]	13.8	23.9	36.5	43.0	50.8	25.3	48.0	73.0	79.0	-	30.0	53.0	-	-	-
	K_e	[mV/min^{-1}]	92	52	34	28	24	95	50	33.1	30.4	-	104	59	-	-	-
	K_T	[Nm/A]	1.33	0.76	0.50	0.42	0.36	1.41	0.75	0.49	0.45	-	1.51	0.86	-	-	-
	R_{pp}	[Ω]	3.94	1.29	0.56	0.39	0.28	1.56	0.43	0.19	0.16	-	1.17	0.37	-	-	-
	L_{pp}	[mH]	52.3	17.1	7.40	5.18	3.72	20.5	5.70	2.50	2.10	-	15.4	4.90	-	-	-
400 Vac	V_n	[V_{AC}]	322	315	316	335	324	312	305	314	323	306	323	320	325	335	329
	I_0	[A]	2.30	4.30	6.40	7.30	8.20	4.30	8.00	11.6	13.7	15.8	5.30	9.80	14.4	16.9	18.9
	I_n	[A]	2.1	3.90	5.20	5.20	5.50	4.20	7.90	10.2	10.5	11.4	4.90	8.40	10.9	11.4	11.8
	I_{max}	[A]	7.49	14.0	21.0	24.0	27.0	14.9	28.0	40.0	48.0	55.0	17.2	32.0	47.0	55.0	62.0
	K_e	[mV/min^{-1}]	165	88	59	52	46	161	86	60	50	44	182	98	67	57	51
	K_T	[Nm/A]	2.43	1.30	0.88	0.77	0.68	2.39	1.28	0.88	0.75	0.65	2.66	1.43	0.97	0.83	0.74
	R_{pp}	[Ω]	13.1	3.76	1.76	1.29	1.04	4.47	1.27	0.61	0.43	0.33	3.60	1.04	0.48	0.35	0.28
	L_{pp}	[mH]	174	50.5	23.4	17.1	13.8	58.8	16.7	8.00	5.70	4.30	47.4	13.7	6.30	4.60	3.70
F24	Mb	[Nm]	18					18					18				
	Δm_M	[kg]	2.2					2.2					2.2				
	ΔJ	[$Kgm^2 \cdot 10^{-4}$]	1.7					1.7					1.7				
F1	Δm_M	[kg]	3.5					3.5					3.5				
	ΔJ	[$Kgm^2 \cdot 10^{-4}$]	16					16					16				

BMD 118 • Dimensions

P1-S1 VARIANT

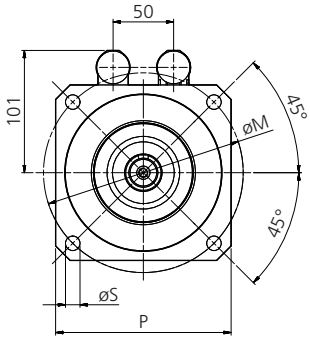

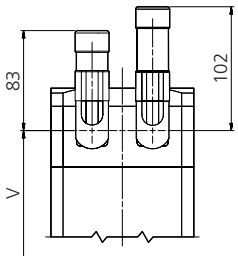

P2 S2 VARIANT

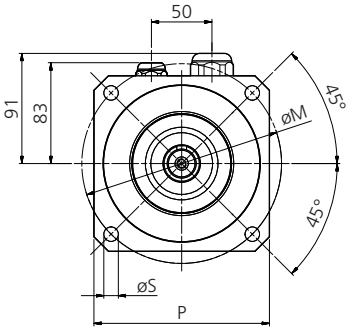

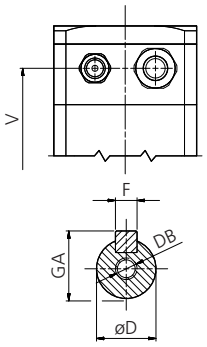

SHAFT END SECTION

P3-S3 VARIANT

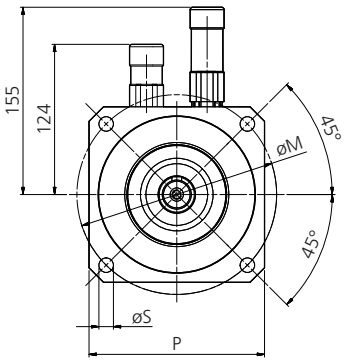

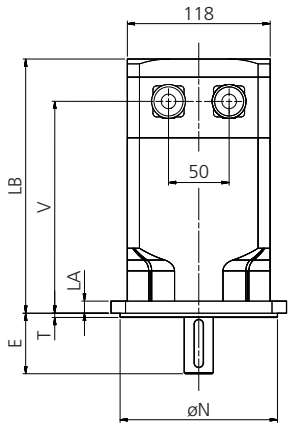

P1N-S1N VARIANT

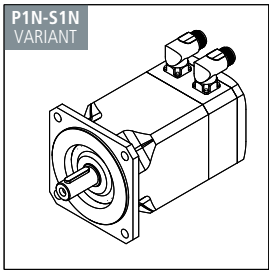

P2-S2 VARIANT

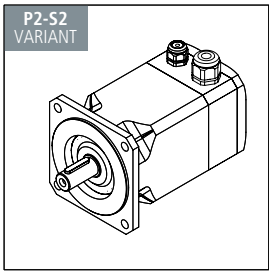

P3N-S3N VARIANT

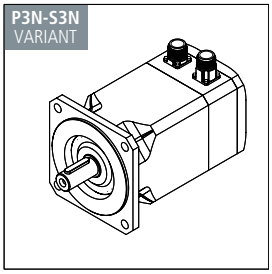

B5 Flange variant						
Flange variant	P	M	N	S	T	LA
130S	118	130	95	9	3.5	10
130	118	130	110	9	3.5	10
165	145	165	130	11.5	3.5	10

Shaft diameter variant					
Shaft diameter	D	E	DB	GA (1)	F (1)
19	19	40	M6	21.5	6
24	24	50	M8	27	8
28	28	60	M10	31	8

Motor length depending on the option

Dimension V

Torque	Without Brake or Flyweel			With Brake or Flyweel **F24/F1** options		
	Feedback Variants			Feedback Variants		
M_0	RES1/RES2/SEN	ENB1/ENB2/ENB7/ENB9...ENB12	ENB3...ENB6/ENB8	RES1/RES2/SEN	ENB1/ENB2/ENB7/ENB9...ENB12	ENB3...ENB6/ENB8
5.6	144	144	144	194	194	194
10.2	175	175	175	225	225	225
14	208	208	208	258	258	258

Dimension LB

Torque	Without Brake or Flyweel			With Brake or Flyweel **F24/F1** options		
	Feedback Variants			Feedback Variants		
M_0	RES1/RES2/SEN	ENB1/ENB2/ENB7/ENB9...ENB12	ENB3...ENB6/ENB8	RES1/RES2/SEN	ENB1/ENB2/ENB7/ENB9...ENB12	ENB3...ENB6/ENB8
5.6	179	204	179	229	254	229
10.2	210	235	210	260	258	260
14	243	268	243	293	318	293

Notes:
(1) Motor shaft extension without key available.

BMD 145 • Ratings

			BMD 145 16.8 Nm					BMD145 22 Nm				
	M_0	[Nm]	16.8					22.0				
	M_n	[Nm]	16.5	16.0	14.0	13.0	12.5	20.7	19.2	17.0	15.0	-
	n	[min^{-1}]	1600	3000	4500	5500	6000	1600	3000	4500	5500	-
	f_n	[Hz]	107	200	300	367	400	107	200	300	367	-
	P_n	[kW]	2.76	5.00	6.60	7.50	7.90	3.50	6.00	8.00	8.60	-
	M_{max}	[Nm]	46.0					59.0				
	2p	[-]	8					8				
	J	[$Kgm^2 \cdot 10^{-4}$]	12.8					17.6				
	τ_{el}	[ms]	16					16				
	τ_{therm}	[min]	36					47				
	m_M	[kg]	15.2					18.2				
230 Vac	V_n	[V_{AC}]	180	176	-	-	-	185	202	-	-	-
	I_0	[A]	12.1	22.8	-	-	-	15.4	26.5	-	-	-
	I_n	[A]	11.9	21.9	-	-	-	14.5	22.9	-	-	-
	I_{max}	[A]	46.0	88.0	-	-	-	51.0	87.0	-	-	-
	K_e	[mV/min^{-1}]	89	47	-	-	-	102	60	-	-	-
	K_T	[Nm/A]	1.39	0.74	-	-	-	1.42	0.83	-	-	-
	R_{pp}	[Ω]	0.84	0.24	-	-	-	0.67	0.23	-	-	-
	L_{pp}	[mH]	13.3	3.80	-	-	-	10.6	3.60	-	-	-
400 Vac	V_n	[V_{AC}]	314	308	314	319	305	319	321	323	357	-
	I_0	[A]	6.90	13.0	19.0	22.8	26.0	9.00	16.4	24.3	26.5	-
	I_n	[A]	6.80	12.5	16.4	17.5	19.0	8.40	14.2	18.3	17.6	-
	I_{max}	[A]	26.7	50.0	73.0	88.0	100	29.5	54.0	80.0	87.0	-
	K_e	[mV/min^{-1}]	156	83	57	47	42	176	96	65	59	-
	K_T	[Nm/A]	2.42	1.29	0.88	0.74	0.65	2.45	1.34	0.90	0.83	-
	R_{pp}	[Ω]	2.53	0.72	0.34	0.24	0.18	1.97	0.59	0.27	0.23	-
	L_{pp}	[mH]	40.4	11.5	5.40	3.80	2.90	31.5	9.40	4.30	3.60	-
F24	Mb	[Nm]	18					18				
	Δm_M	[kg]	2.6					2.6				
	ΔJ	[$Kgm^2 \cdot 10^{-4}$]	1.7					1.7				
F1	Δm_M	[kg]	5.0					5.0				
	ΔJ	[$Kgm^2 \cdot 10^{-4}$]	36					36				

BMD 145 • Dimensions

P1-S1 VARIANT

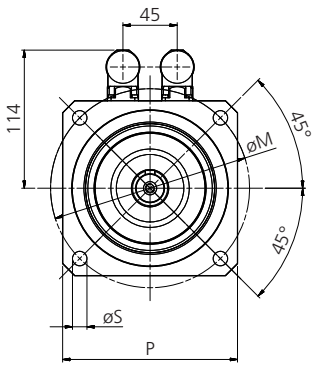

P2 S2 VARIANT

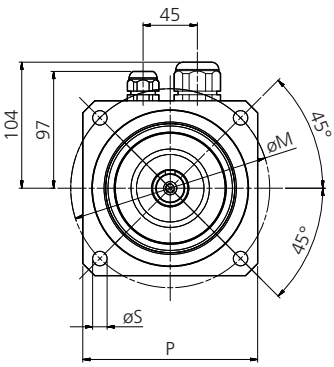

P3-S3 VARIANT

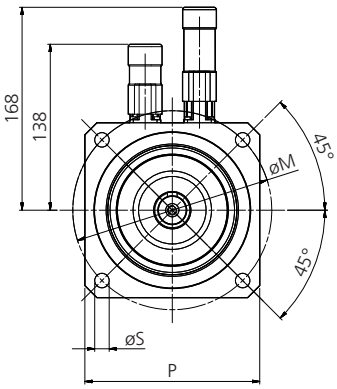

P1N-S1N VARIANT

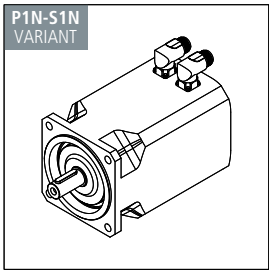

P2-S2 VARIANT

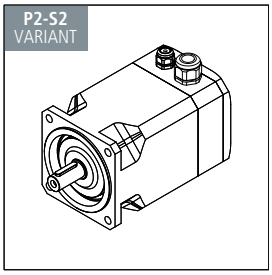

P3N-S3N VARIANT

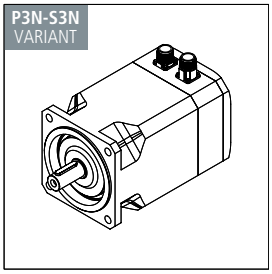

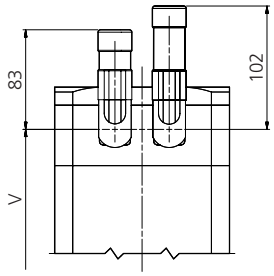

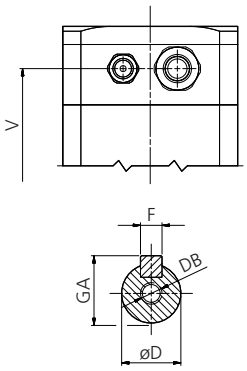

SHAFT END SECTION

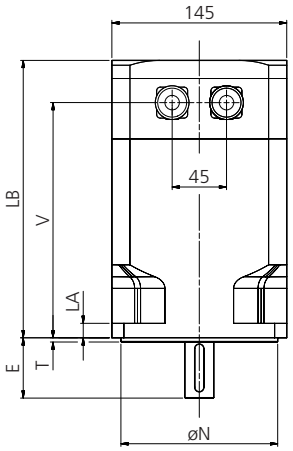

B5 Flange variant						
Flange variant	P	M	N	S	T	LA
165	145	165	130	12	3.5	12

Shaft diameter variant					
Shaft diameter	D	E	DB	GA (1)	F (1)
19	19	40	M6	21.5	6
24	24	50	M8	27	8
28	28	60	M10	31	8

Motor length depending on the option

Dimension V

Torque	Without Brake or Flyweel			With Brake or Flyweel **F24/F1** options		
	Feedback Variants			Feedback Variants		
M_0	RES1/RES2/SEN	ENB1/ENB2/ENB7/ENB9...ENB12	ENB3...ENB6/ENB8	RES1/RES2/SEN	ENB1/ENB2/ENB7/ENB9...ENB12	ENB3...ENB6/ENB8
16.8	195	195	195	245	245	245
22	230	230	230	280	280	280

Dimension LB

Torque	Without Brake or Flyweel			With Brake or Flyweel **F24/F1** options		
	Feedback Variants			Feedback Variants		
M_0	RES1/RES2/SEN	ENB1/ENB2/ENB7/ENB9...ENB12	ENB3...ENB6/ENB8	RES1/RES2/SEN	ENB1/ENB2/ENB7/ENB9...ENB12	ENB3...ENB6/ENB8
16.8	230	255	230	280	305	280
22	265	290	265	315	375	315

Notes:
(1) Motor shaft extension without key available.

BMD 145 with Forced Ventilation option • Ratings

			BMD 145 16.8 Nm with Forced Ventilation					BMD145 22 Nm with Forced Ventilation				
	M_0	[Nm]	21.5					27.5				
	M_n	[Nm]	20.5	19.2	17.2	15.7	-	27.4	26.1	24.3	-	-
	n	[min^{-1}]	1600	3000	4500	5500	-	1600	3000	4500	-	-
	f_n	[Hz]	107	200	300	367	-	107	200	300	-	-
	P_n	[kW]	3.43	6.00	8.10	9.00	-	4.60	8.20	11.5	-	-
	M_{max}	[Nm]	46.0					59.0				
	2p	[-]	8					8				
	J	[$Kgm^2 \cdot 10^{-4}$]	12.8					17.6				
	τ_{el}	[ms]	16					16				
	τ_{therm}	[min]	17					22				
	m_M	[kg]	18.7					21.7				
230 Vac	V_n	[V_{AC}]	203	195	-	-	-	214	-	-	-	-
	I_0	[A]	16.3	30.0	-	-	-	19.8	-	-	-	-
	I_n	[A]	15.5	26.6	-	-	-	19.6	-	-	-	-
	I_{max}	[A]	46.0	88.0	-	-	-	51.0	-	-	-	-
	K_e	[mV/min^{-1}]	89	47	-	-	-	102	-	-	-	-
	K_T	[Nm/A]	1.32	0.72	-	-	-	1.39	-	-	-	-
	R_{pp}	[Ω]	0.84	0.24	-	-	-	0.67	-	-	-	-
	L_{pp}	[mH]	13.3	3.80	-	-	-	10.6	-	-	-	-
400 Vac	V_n	[V_{AC}]	345	331	322	323	-	363	352	348	-	-
	I_0	[A]	9.45	17.6	25.8	30.0	-	11.5	21.1	30.0	-	-
	I_n	[A]	8.90	15.2	20.0	21.6	-	11.4	19.8	27.1	-	-
	I_{max}	[A]	26.7	50.0	73.0	88.0	-	29.5	54.0	80.0	-	-
	K_e	[mV/min^{-1}]	156	83	57	47	-	176	96	65	-	-
	K_T	[Nm/A]	2.28	1.23	0.83	0.72	-	2.39	1.31	0.92	-	-
	R_{pp}	[Ω]	2.53	0.72	0.34	0.24	-	1.97	0.59	0.27	-	-
	L_{pp}	[mH]	40.4	11.5	5.40	3.80	-	31.5	9.40	4.30	-	-
F24	Mb	[Nm]	18					18				
	Δm_M	[kg]	2.6					2.6				
	ΔJ	[$Kgm^2 \cdot 10^{-4}$]	1.7					1.7				
F1	Δm_M	[kg]	5.0					5.0				
	ΔJ	[$Kgm^2 \cdot 10^{-4}$]	36					36				

BMD 145 with Forced Ventilation option •
Dimensions

P1-S1-V1R/V2R VARIANT

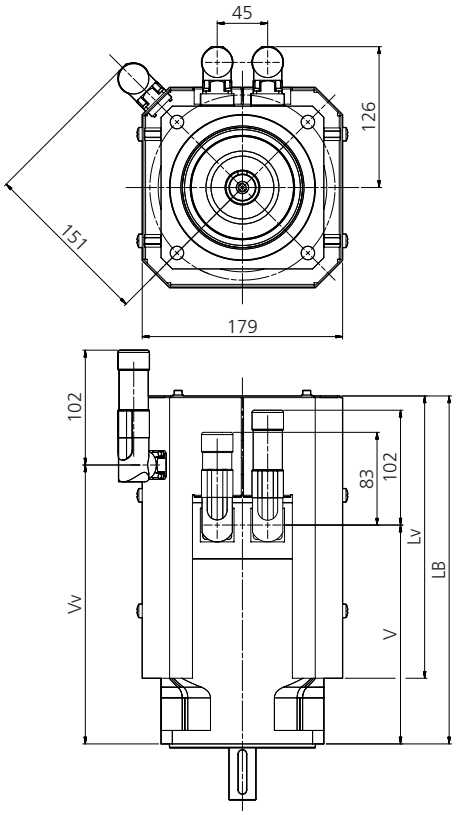

P3-S3-V1S/V2S VARIANT

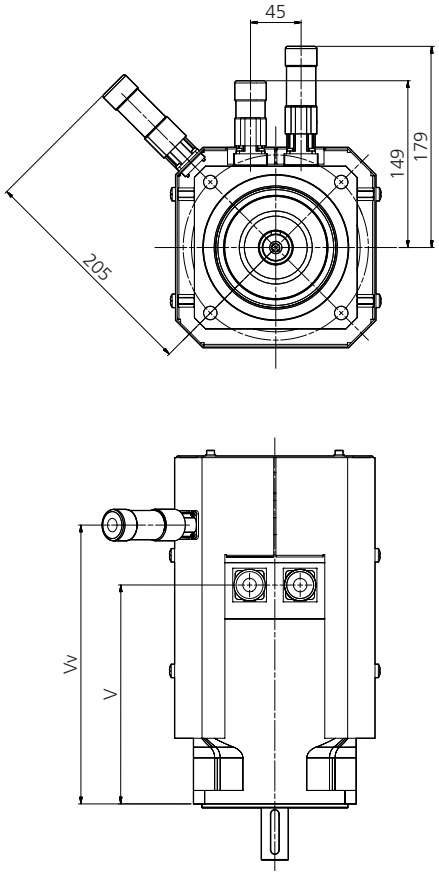

P1N-S1N-V1R/V2R VARIANT

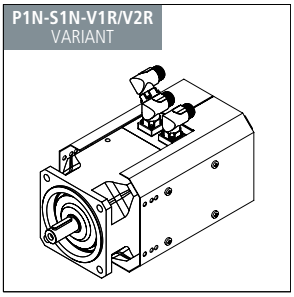

P3N-S3N-V1S/V2S VARIANT

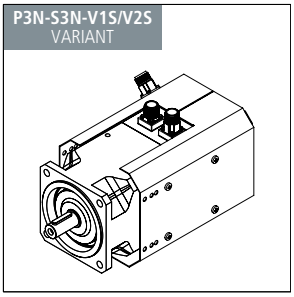

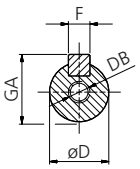

SHAFT END SECTION

B5 Flange variant						
Flange variant	P	M	N	S	T	LA
165	145	165	130	12	3.5	12

Shaft diameter variant					
Shaft diameter	D	E	DB	GA (1)	F (1)
19	19	40	M6	21.5	6
24	24	50	M8	27	8
28	28	60	M10	31	8

Motor length depending on the option

Dimension V - (Vv)

Torque	Without Brake or Flyweel			With Brake or Flyweel **F24/F1** options		
	Feedback Variants			Feedback Variants		
M_0	RES1/RES2/SEN	ENB1/ENB2/ENB7/ENB9...ENB12	ENB3...ENB6/ENB8	RES1/RES2/SEN	ENB1/ENB2/ENB7/ENB9...ENB12	ENB3...ENB6/ENB8
16.8	195 - (249)	195 - (274)	195 - (249)	245 - (299)	245 - (324)	245 - (299)
22	230 - (284)	230 - (309)	230 - (284)	280 - (334)	280 - (394)	280 - (334)

Dimension LB - (Lv)

Torque	Without Brake or Flyweel			With Brake or Flyweel **F24/F1** options		
	Feedback Variants			Feedback Variants		
M_0	RES1/RES2/SEN	ENB1/ENB2/ENB7/ENB9...ENB12	ENB3...ENB6/ENB8	RES1/RES2/SEN	ENB1/ENB2/ENB7/ENB9...ENB12	ENB3...ENB6/ENB8
16.8	310- (252)	335 - (252)	310 - (252)	360 - (252)	385 - (312)	360 - (252)
22	345 - (252)	370 - (312)	345 - (252)	395 - (312)	455 - (312)	395 - (312)

Notes:
(1) Motor shaft extension without key available.

BMD 170 • Ratings

			BMD 170 34 Nm					BMD170 45 Nm				
	M_0	[Nm]	34.0					45.0				
	M_n	[Nm]	31.0	27.5	-	-	-	42.0	36.0	-	-	-
	n	[min^{-1}]	1600	3000	-	-	-	1600	3000	-	-	-
	f_n	[Hz]	107	200	-	-	-	107	200	-	-	-
	P_n	[kW]	5.20	8.60	-	-	-	7.00	11.3	-	-	-
	M_{max}	[Nm]	90.0					125				
	2p	[-]	8					8				
	J	[Kgm^2·10^{-4}]	33.8					47.5				
	τ_{el}	[ms]	20					19				
	τ_{therm}	[min]	50					65				
	m_M	[kg]	25					30				
230 Vac	V_n	[V_{AC}]	181	182	-	-	-	-	-	-	-	-
	I_0	[A]	21.8	40.4	-	-	-	-	-	-	-	-
	I_n	[A]	19.7	32.2	-	-	-	-	-	-	-	-
	I_{max}	[A]	66.0	121	-	-	-	-	-	-	-	-
	K_e	[mV/min^{-1}]	99	54	-	-	-	-	-	-	-	-
	K_T	[Nm/A]	1.56	0.84	-	-	-	-	-	-	-	-
	R_{pp}	[Ω]	0.30	0.09	-	-	-	-	-	-	-	-
	L_{pp}	[mH]	5.80	1.70	-	-	-	-	-	-	-	-
400 Vac	V_n	[V_{AC}]	319	315	-	-	-	310	314	-	-	-
	I_0	[A]	12.4	23.3	-	-	-	17.1	31.0	-	-	-
	I_n	[A]	11.2	18.6	-	-	-	15.9	24.9	-	-	-
	I_{max}	[A]	37.0	70.0	-	-	-	52.0	96.0	-	-	-
	K_e	[mV/min^{-1}]	174	93	-	-	-	185	101	-	-	-
	K_T	[Nm/A]	2.74	1.46	-	-	-	2.64	1.50	-	-	-
	R_{pp}	[Ω]	0.91	0.26	-	-	-	0.57	0.17	-	-	-
	L_{pp}	[mH]	17.9	5.10	-	-	-	11.1	3.30	-	-	-
F24	Mb	[Nm]	36					36				
	Δm_M	[kg]	4.5					4.5				
	ΔJ	[Kgm^2·10^{-4}]	5.6					5.6				
F1	Δm_M	[kg]	8.2					8.2				
	ΔJ	[Kgm^2·10^{-4}]	70					70				

BMD 170 • Dimensions

P1-S1 VARIANT

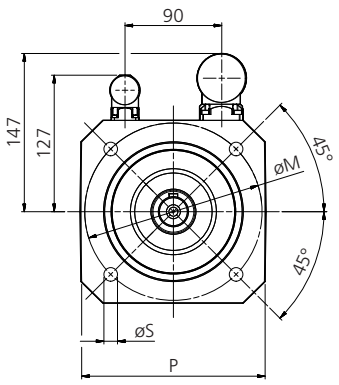

P2 S2 VARIANT

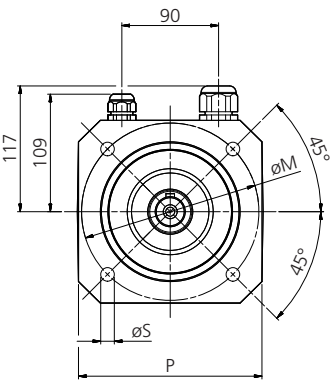

P3-S3 VARIANT

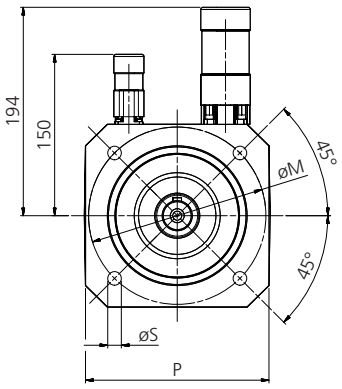

P1N-S1N VARIANT

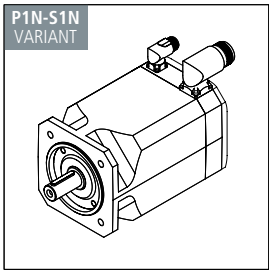

P2-S2 VARIANT

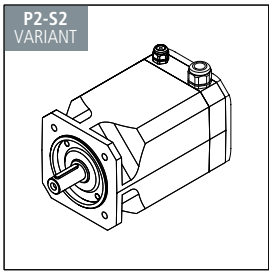

P3N-S3N VARIANT

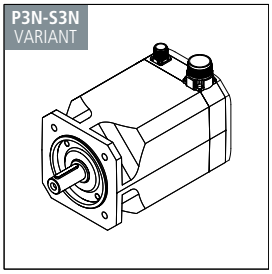

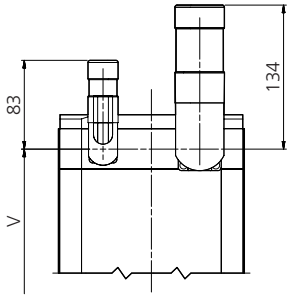

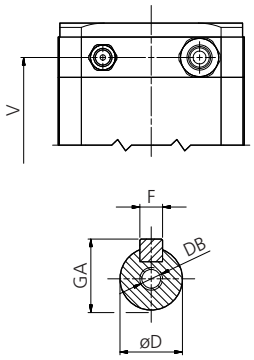

SHAFT END SECTION

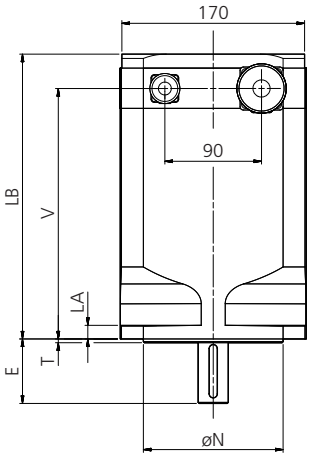

B5 Flange variant						
Flange variant	P	M	N	S	T	LA
165	170	165	130	12	3.5	12

Shaft diameter variant					
Shaft diameter	D	E	DB	GA (1)	F (1)
24	24	50	M8	27	8
28	28	60	M10	31	8
32	32	60	M12	35	10

Motor length depending on the option

Dimension V

Torque	Without Brake or Flyweel			With Brake or Flyweel **F24/F1** options		
	Feedback Variants			Feedback Variants		
M_0	RES1/RES2/SEN	ENB1/ENB2/ENB7/ENB11...ENB12	ENB3...ENB6/ENB8/ENB9...ENB10	RES1/RES2/SEN	ENB1/ENB2/ENB7/ENB11...ENB12	ENB3...ENB6/ENB8/ENB9...ENB10
34	233	233	233	308	308	308
45	287	287	287	362	362	362

Dimension LB

Torque	Without Brake or Flyweel			With Brake or Flyweel **F24/F1** options		
	Feedback Variants			Feedback Variants		
M_0	RES1/RES2/SEN	ENB1/ENB2/ENB7/ENB11...ENB12	ENB3...ENB6/ENB8/ENB9...ENB10	RES1/RES2/SEN	ENB1/ENB2/ENB7/ENB11...ENB12	ENB3...ENB6/ENB8/ENB9...ENB10
34	265	303	265	340	378	340
45	319	357	319	394	432	394

Notes:
(1) Motor shaft extension without key available.

BMD 170 with Forced Ventilation option • Ratings

			BMD 170 34 Nm with Forced Ventilation					BMD170 45 Nm with Forced Ventilation				
	M_0	[Nm]	44.0					60.0				
	M_n	[Nm]	42.0	39.0	-	-	-	57.0	53.0	-	-	-
	n	[min^{-1}]	1600	3000	-	-	-	1600	3000	-	-	-
	f_n	[Hz]	107	200	-	-	-	107	200	-	-	-
	P_n	[kW]	7.00	12.2	-	-	-	9.50	16.6	-	-	-
	M_{max}	[Nm]	90.0					125				
	2p	[-]	8					8				
	J	[$Kgm^2 \cdot 10^{-4}$]	33.8					47.5				
	τ_{el}	[ms]	20					19				
	τ_{therm}	[min]	23					29				
	m_M	[kg]	29					34				
230 Vac	V_n	[V_{AC}]	207	205	-	-	-	-	-	-	-	-
	I_0	[A]	29.8	55.1	-	-	-	-	-	-	-	-
	I_n	[A]	28.7	48.9	-	-	-	-	-	-	-	-
	I_{max}	[A]	66.0	121	-	-	-	-	-	-	-	-
	K_e	[mV/min^{-1}]	99	54	-	-	-	-	-	-	-	-
	K_T	[Nm/A]	1.48	0.80	-	-	-	-	-	-	-	-
	R_{pp}	[Ω]	0.3	0.09	-	-	-	-	-	-	-	-
	L_{pp}	[mH]	5.8	1.7	-	-	-	-	-	-	-	-
400 Vac	V_n	[V_{AC}]	350	342	-	-	-	361	351	-	-	-
	I_0	[A]	17.0	31.8	-	-	-	23.0	42.0	-	-	-
	I_n	[A]	16.3	28.2	-	-	-	21.5	36.3	-	-	-
	I_{max}	[A]	37.0	70.0	-	-	-	52.0	96.0	-	-	-
	K_e	[mV/min^{-1}]	174	93	-	-	-	185	101	-	-	-
	K_T	[Nm/A]	2.59	1.39	-	-	-	2.62	1.43	-	-	-
	R_{pp}	[Ω]	0.91	0.26	-	-	-	0.57	0.17	-	-	-
	L_{pp}	[mH]	17.9	5.10	-	-	-	11.1	3.30	-	-	-
F24	Mb	[Nm]	36					36				
	Δm_M	[kg]	4.5					4.5				
	ΔJ	[$Kgm^2 \cdot 10^{-4}$]	5.6					5.6				
F1	Δm_M	[kg]	8.2					8.2				
	ΔJ	[$Kgm^2 \cdot 10^{-4}$]	70					70				

BMD 170 with Forced Ventilation option •
Dimensions

P1-S1-V1R/V2R VARIANT

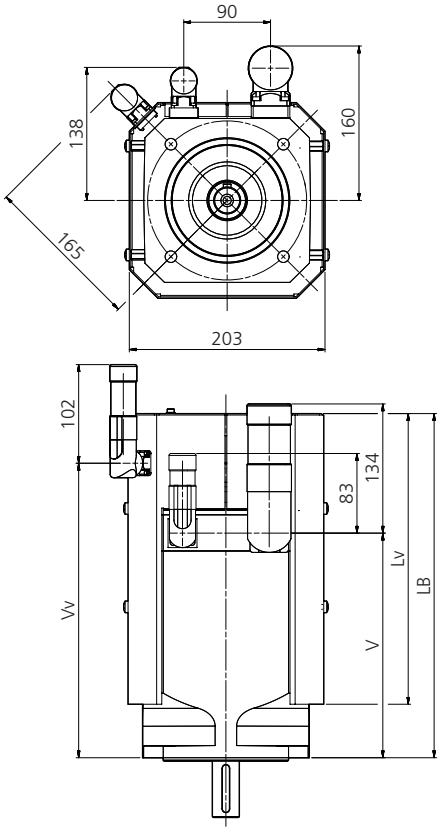

P3-S3-V1S/V2S VARIANT

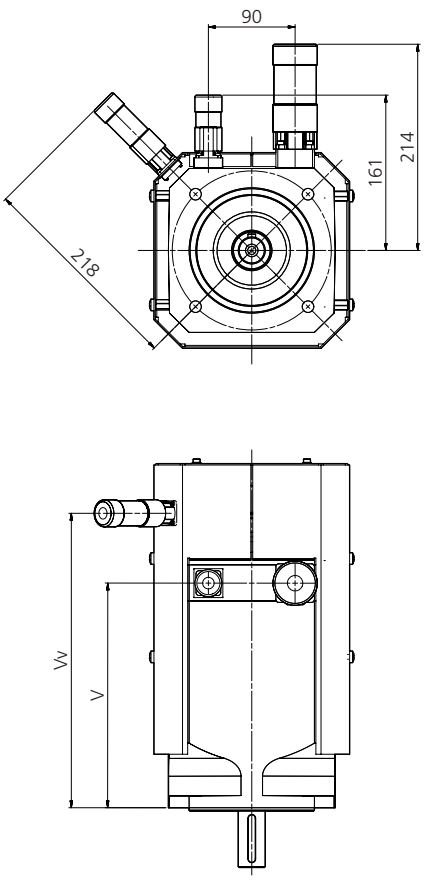

P1N-S1N-V1R/V2R VARIANT

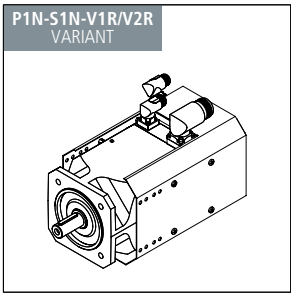

P3N-S3N-V1S/V2S VARIANT

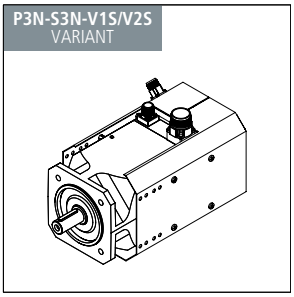

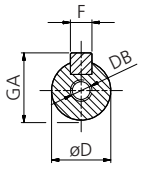

SHAFT END SECTION

B5 Flange variant						
Flange variant	P	M	N	S	T	LA
165	170	165	130	12	3.5	12

Shaft diameter variant					
Shaft diameter	D	E	DB	GA (1)	F (1)
24	24	50	M8	27	8
28	28	60	M10	31	8
32	32	60	M12	35	10

Motor length depending on the option

Dimension V - (Vv)

Torque	Without Brake or Flyweel			With Brake or Flyweel **F24/F1** options		
	Feedback Variants			Feedback Variants		
M_0	RES1/RES2/SEN	ENB1/ENB2/ENB7/ENB11...ENB12	ENB3...ENB6/ENB8/ENB9...ENB10	RES1/RES2/SEN	ENB1/ENB2/ENB7/ENB11...ENB12	ENB3...ENB6/ENB8/ENB9...ENB10
34	233 - (306)	233 - (344)	233 - (306)	308 - (381)	308 - (427)	308 - (381)
45	287 - (360)	287 - (398)	287 - (360)	362 - (435)	362 - (473)	362 - (435)

Dimension LB - (Lv)

Torque	Without Brake or Flyweel			With Brake or Flyweel **F24/F1** options		
	Feedback Variants			Feedback Variants		
M_0	RES1/RES2/SEN	ENB1/ENB2/ENB7/ENB11...ENB12	ENB3...ENB6/ENB8/ENB9...ENB10	RES1/RES2/SEN	ENB1/ENB2/ENB7/ENB11...ENB12	ENB3...ENB6/ENB8/ENB9...ENB10
34	357 - (302)	395 - (302)	357 - (302)	432 - (302)	478 - (377)	432 - (302)
45	411 - (302)	449 - (302)	411 - (302)	486 - (377)	524 - (377)	486 - (377)

Notes:
(1) Motor shaft extension without key available.

TORQUE-SPEED CHARACTERISTIC

The permissible operating range of a brushless servomotor depends on thermal, mechanical and electromagnetic limits.

The thermal limit is dependent on the thermal class of the insulation system (F). To adhere to the temperature limits, the torque must be reduced as the speed increases, starting from stall torque M_0. The maximum permissible torque is then dependent on the operation mode. The characteristic curves are assigned for continuous duty S1 and intermittent periodic duty S3 with a cycle time of 10 minutes, except for small motors, for which a cycle time of 1 minute is specified and noted in the characteristic curves. A transient, high overload capacity up to M_{max} is provided.

The speed range is constrained by the maximum mechanical speed and the voltage limit. The voltage limit is usually lower than the mechanical one. The voltage limiting characteristic curve is determined by the motor nominal speed. The characteristic curves for each nominal speed are reported in the same diagram. For drive sizing convenience, it is preferable to select the motor whose voltage limit curve does not lie too far above the maximum speed required for the application.

Therefore, the performance characteristics of a brushless motor are described by a torque and speed operating area. The continuous duty zone is bordered by the maximum continuous torque curve up to the intersection with the voltage limit curve. Continuous duty in the area above the S1 characteristic curve is not thermally permitted for the motor. The intermittent periodic duty zone is bordered by the peak torque line and the voltage limit curve.

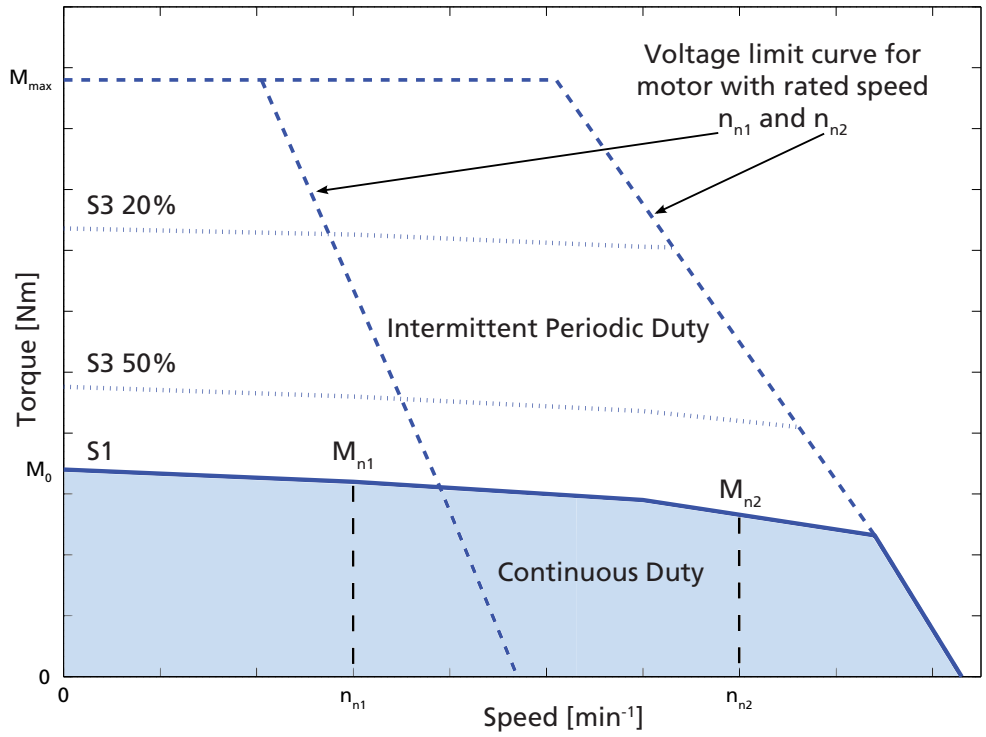

BMD 65 • Torque-speed curves

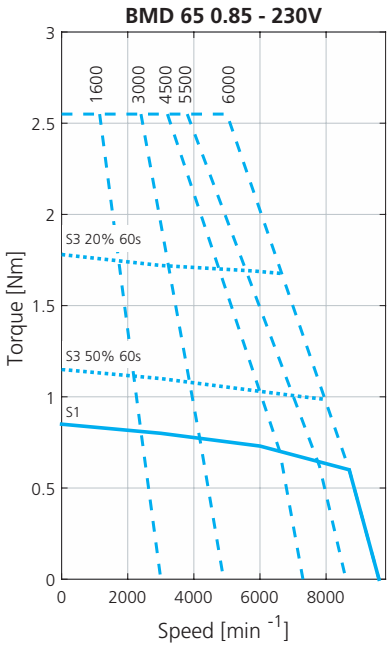

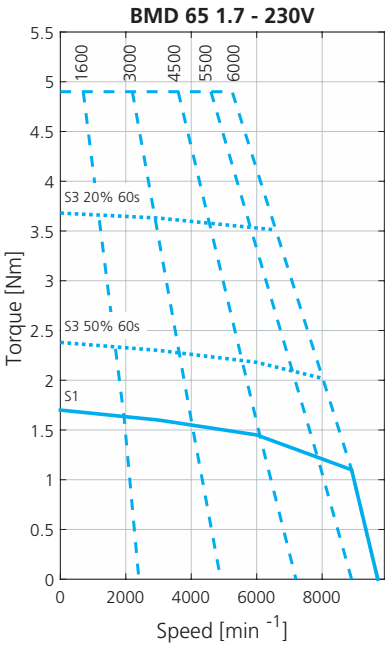

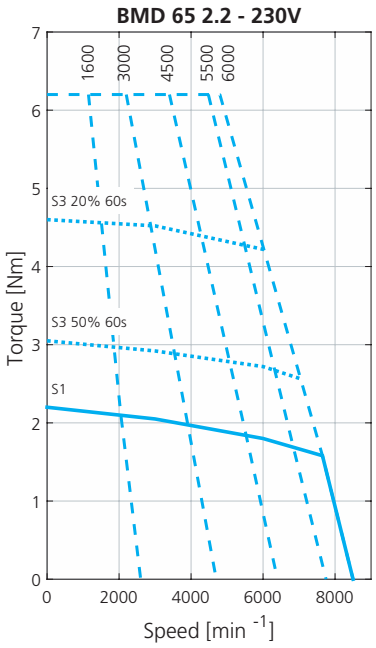

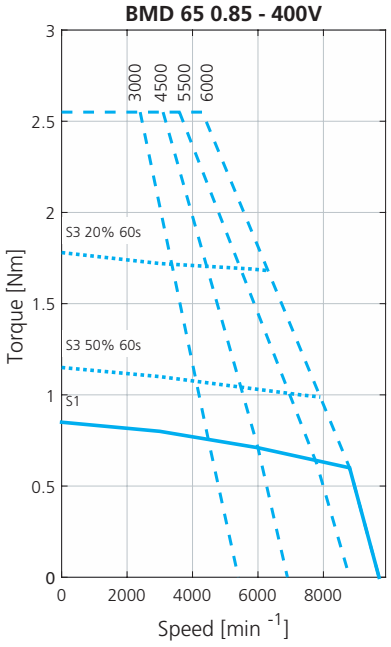

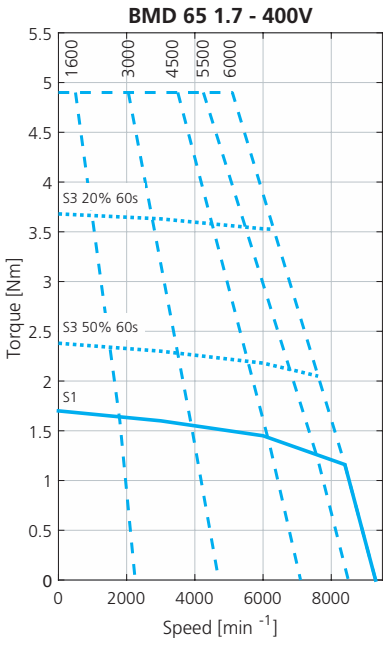

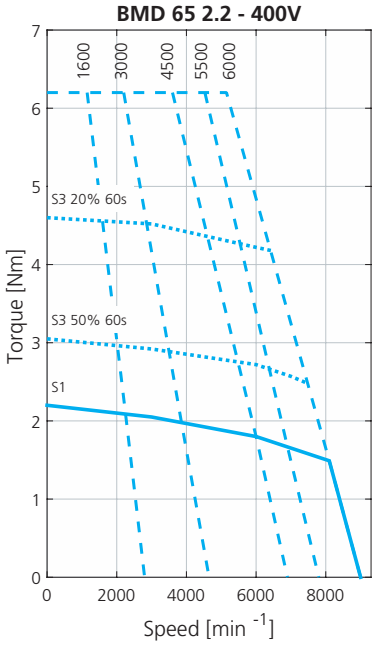

BMD 82 • Torque-speed curves

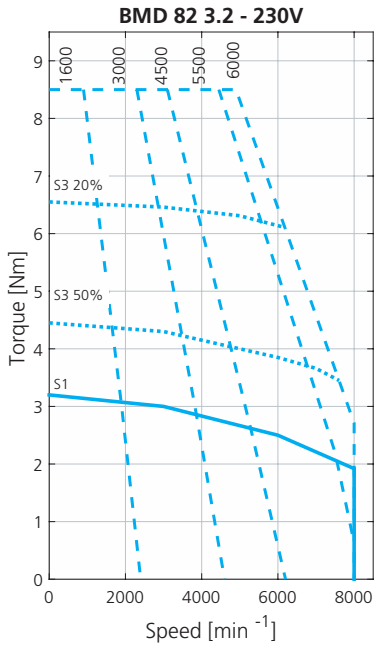

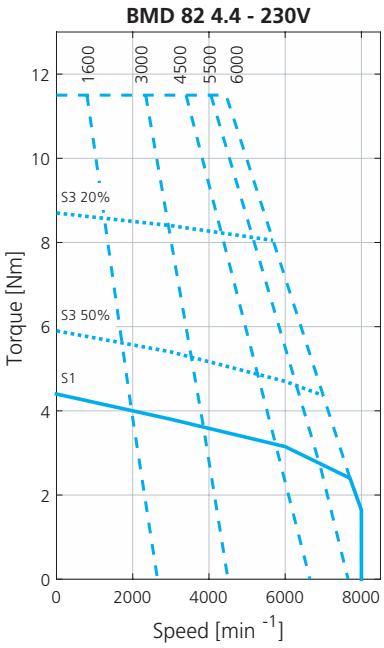

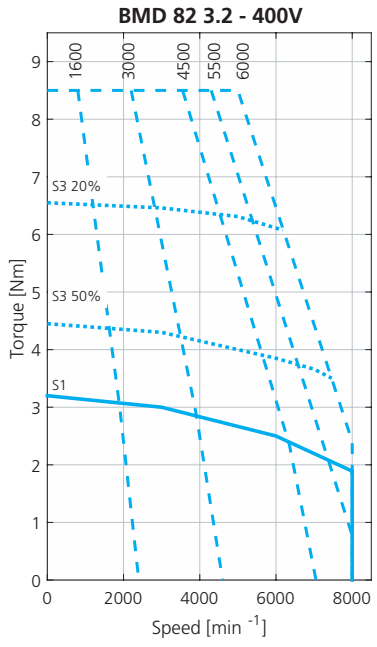

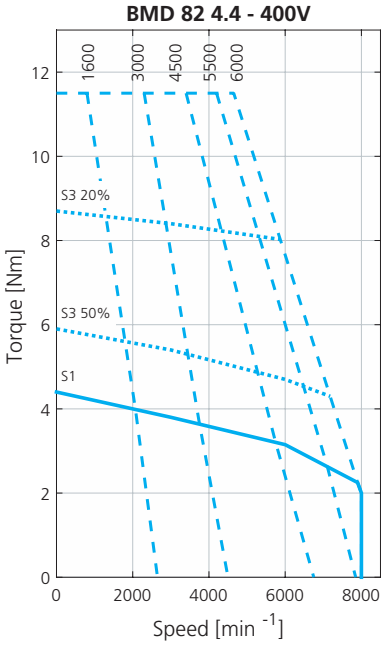

BMD 102 • Torque-speed curves

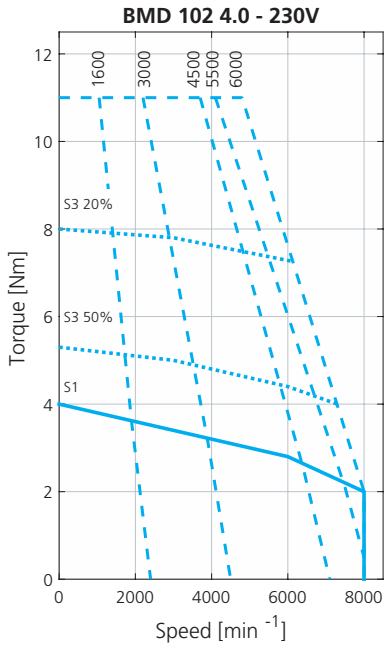

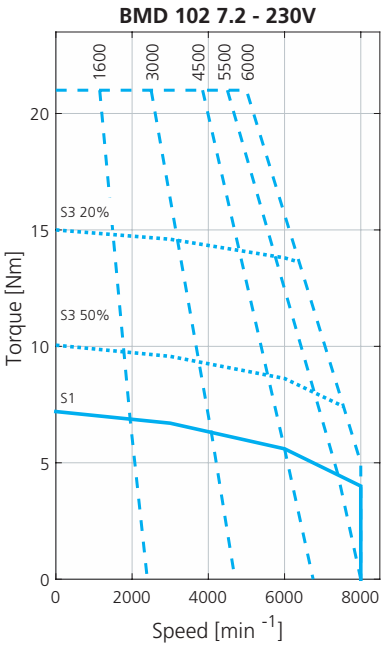

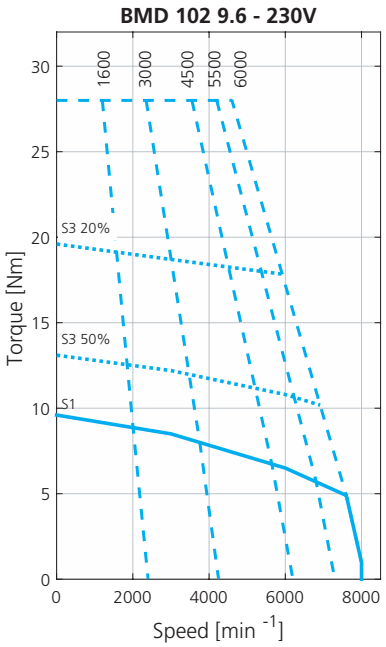

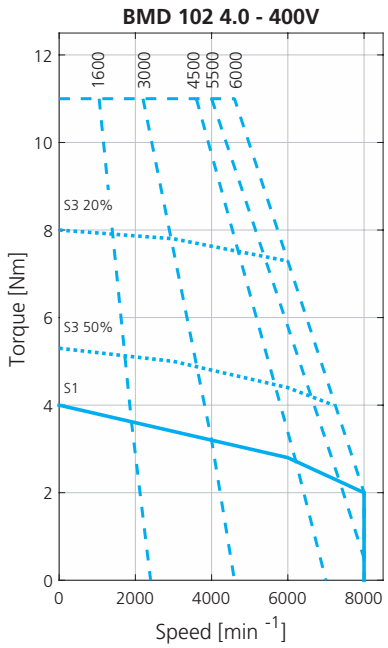

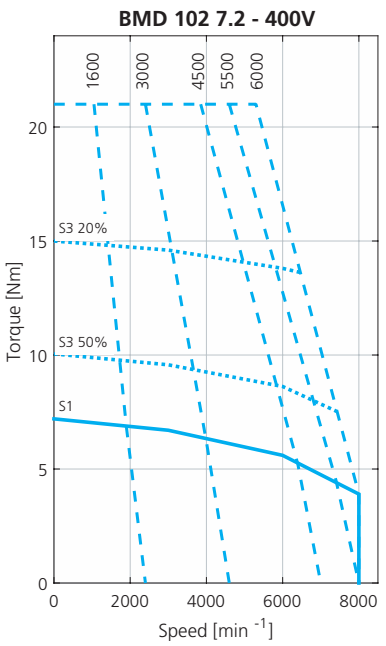

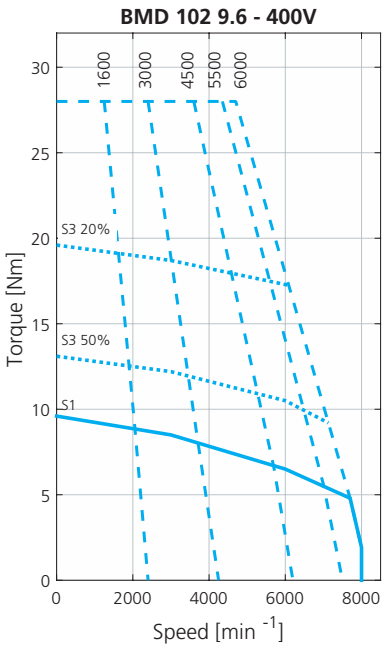

BMD 118 • Torque-speed curves

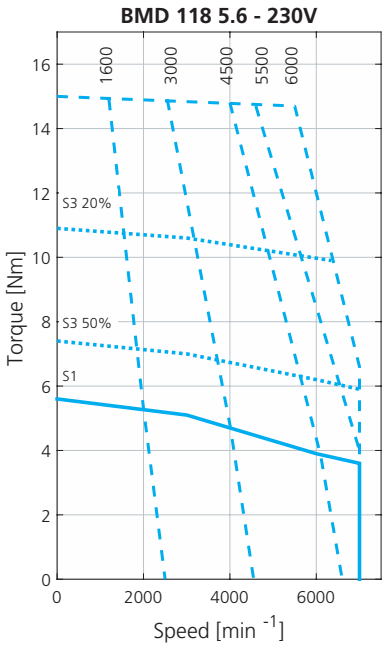

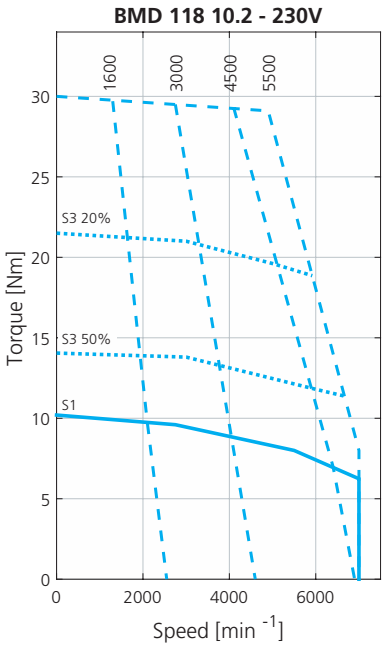

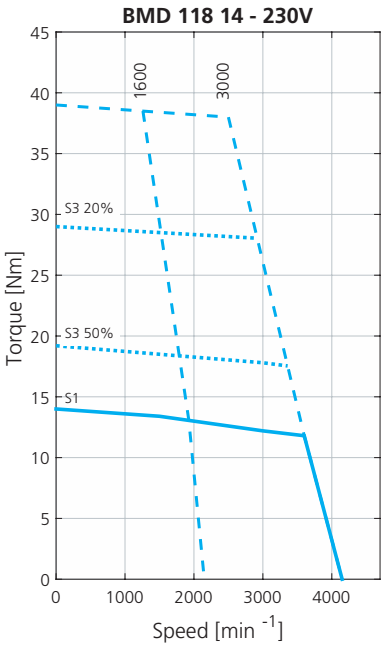

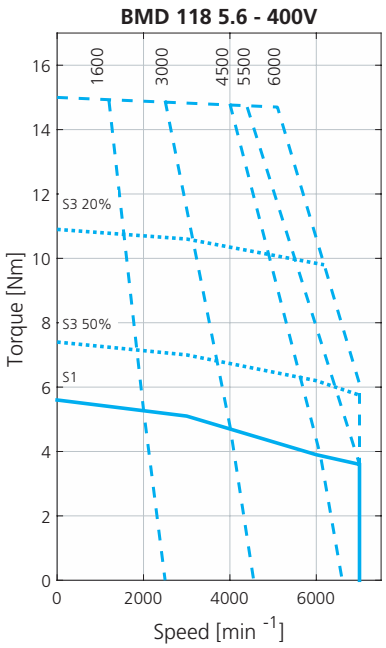

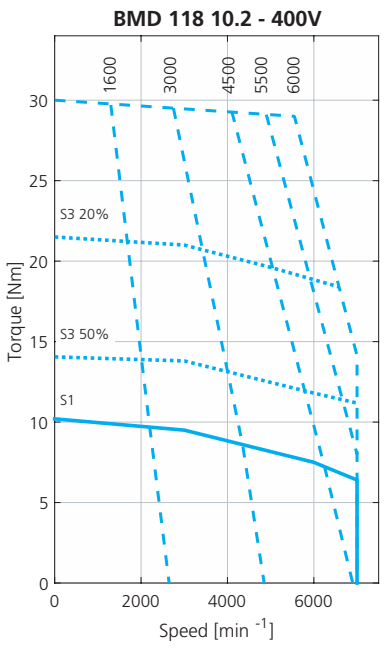

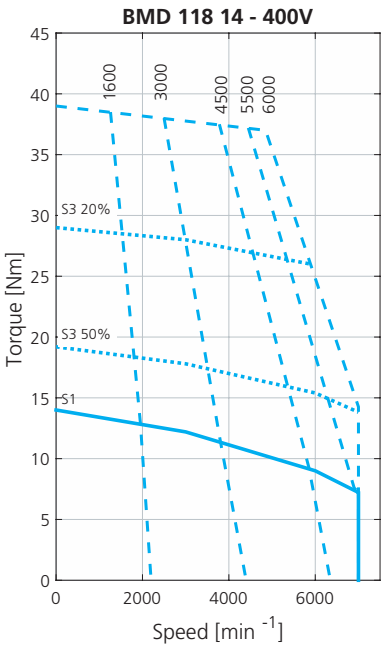

BMD 145 • Torque-speed curves

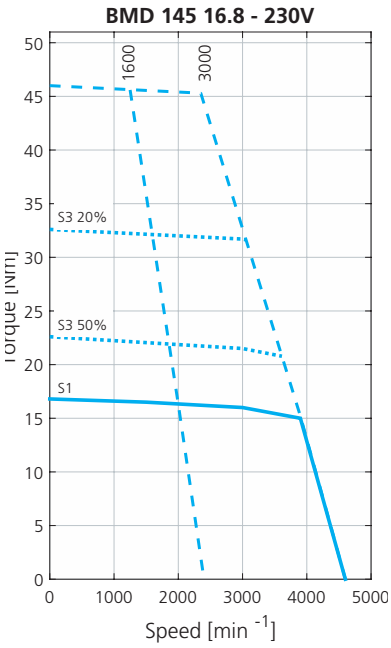

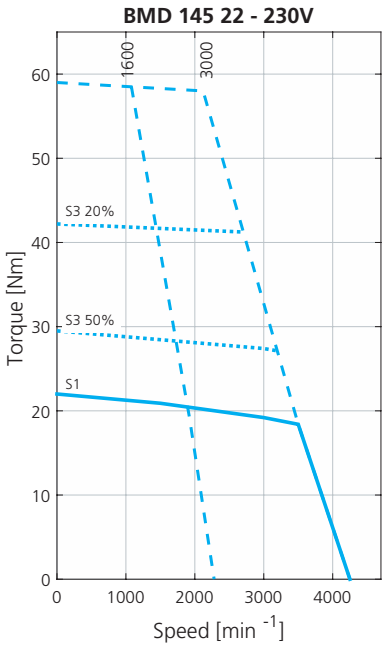

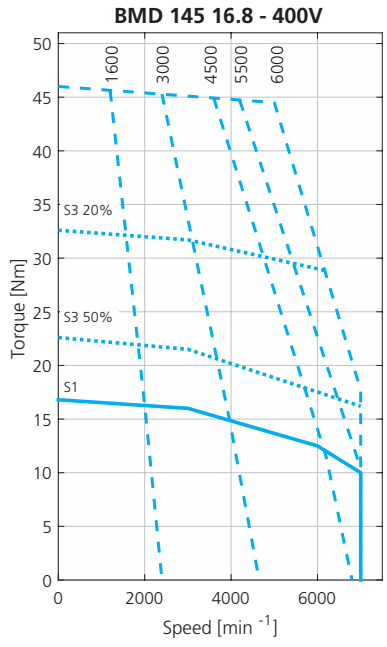

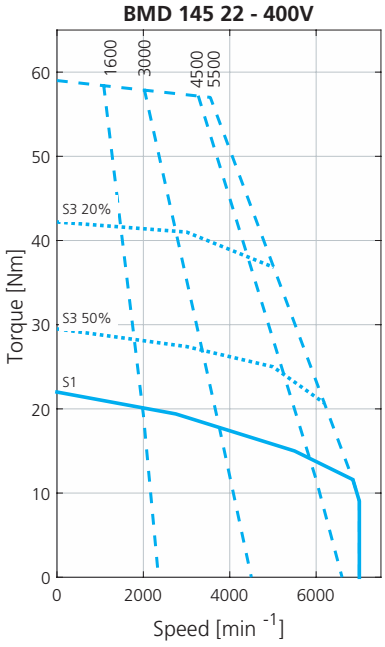

BMD 145 with Forced Ventilation option
Torque-speed curves

BMD 145 16.8 - 230V with fan unit

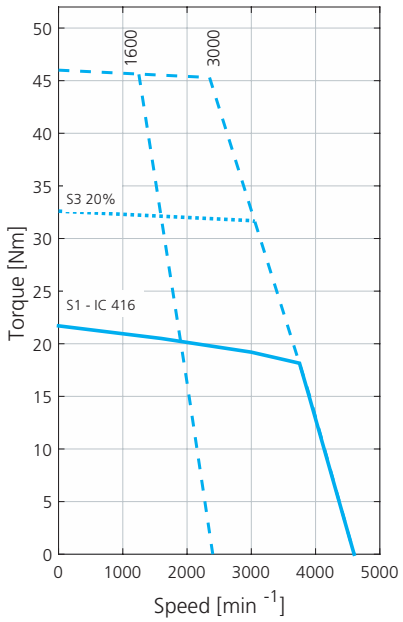

BMD 145 22 - 230V with fan unit

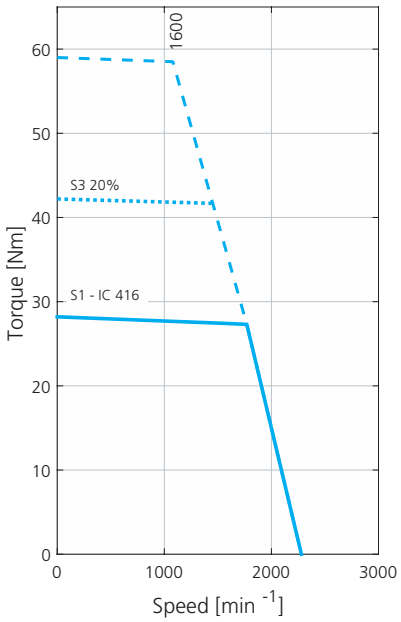

BMD 145 16.8 - 400V with fan unit

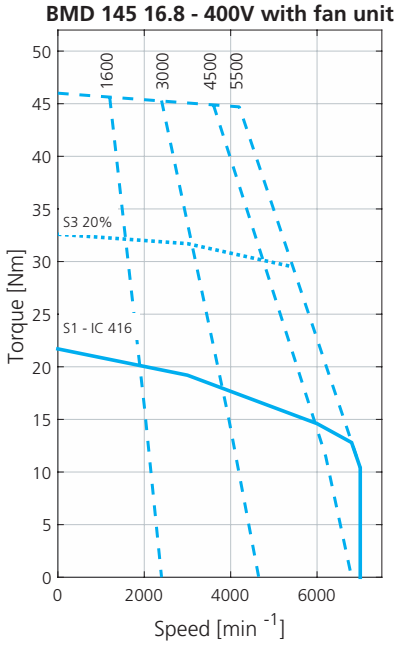

BMD 145 22 - 400V with fan unit

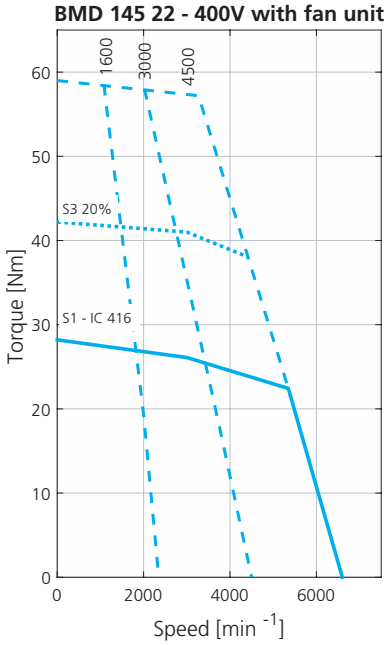

BMD 170 • Torque-speed curves

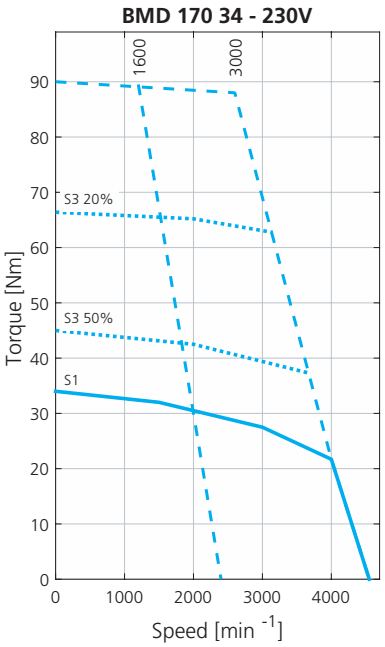

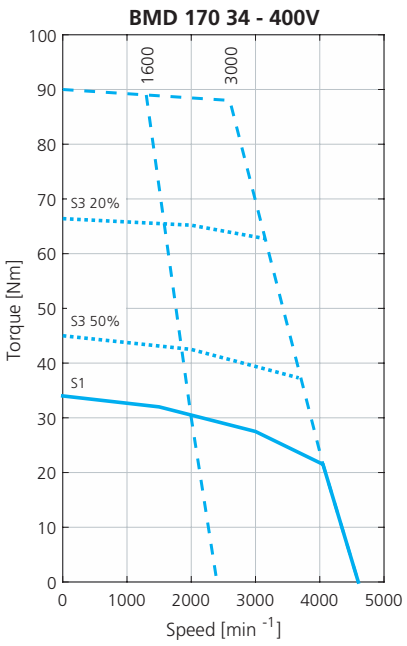

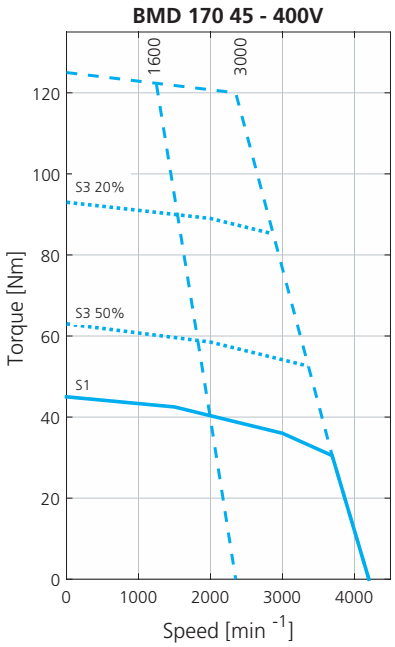

BMD 170 with Forced Ventilation option
Torque-speed curves

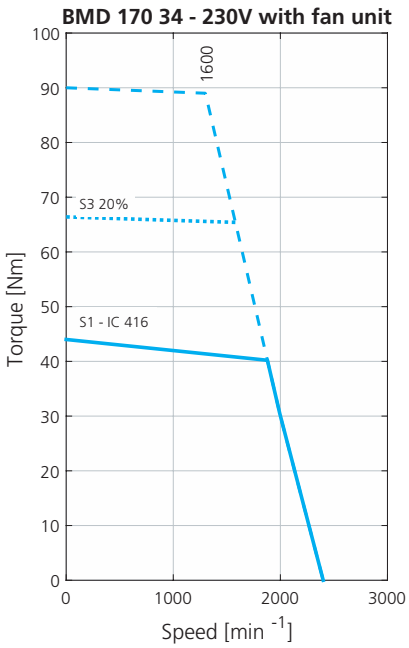

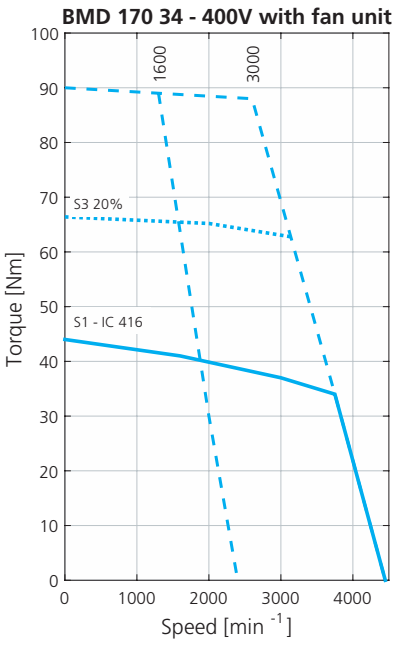

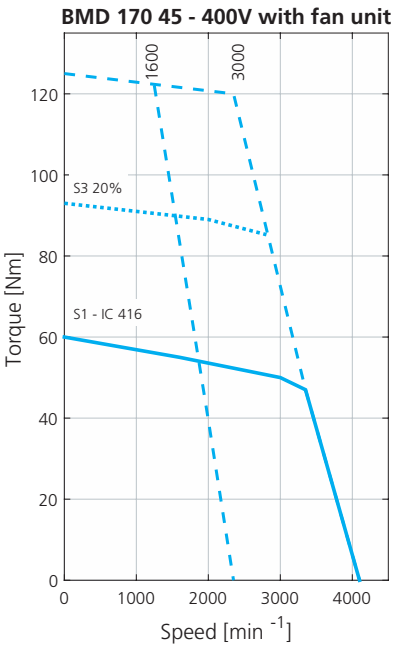

FEEDBACK DEVICES

SENSORLESS: [SEN]

Thanks to an efficient algorithm Bonfiglioli Agile drives can control brushless servo motors without the need of any feedback sensors. With this option the BMD servomotors have no feedback device and the angular position of the motor shaft is estimated from measurements of the current absorbed by the motor.

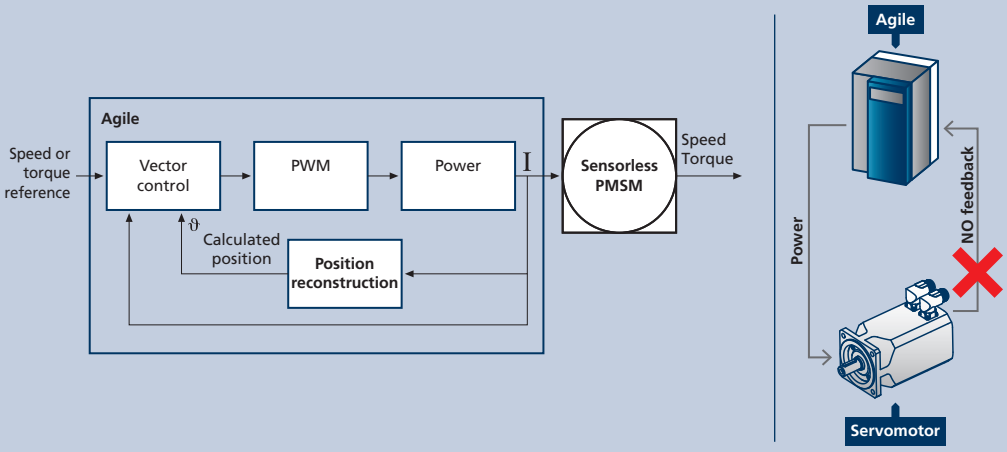

SEN P1/P1N
8-pin power connector

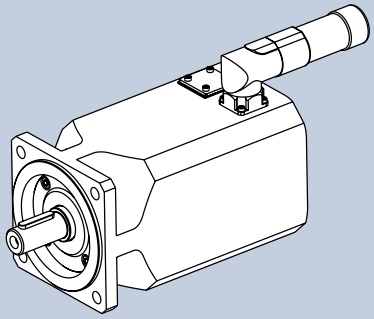

SEN P2
1-meter power cable

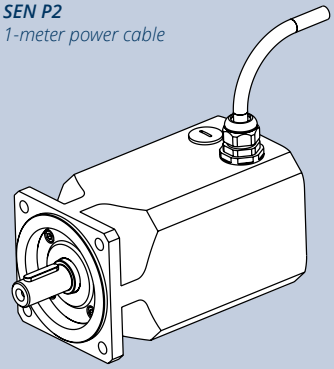

RESOLVER: [RES1,RES2]

The resolver is an electromagnetic transformer consisting of a stator and a rotor element excited from an external source. It produces two output signals that correspond to the sine and cosine angle of the motor shaft. This is a robust device of good accuracy, capable of withstanding high temperature and high levels of vibration. Position information is absolute within one turn.

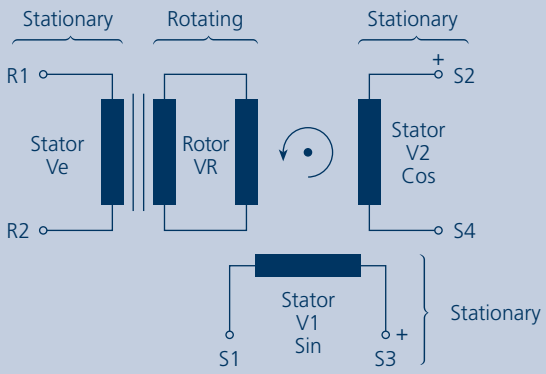

Item	BMD 65	BMD82 - BMD170	
	RES2	RES1	RES2
Poles number	2	2	2
Transformation ratio	0.5 ±5%	0.5 $^{+15\%}_{-5\%}$	0.5 ±5%
Input voltage [Vac_{rms}]	7	11	5.5
Input current [mA]	65	57	61
Input frequency [kHz]	10	8	10
Phase shift	0°	-11°	-12°
Input impedance Zro	70 + j100	75 + j185	43 + j79
Output impedance Zss (Ω)	175 +j275	135 + j265	62 + j112
Electrical error	±10′	±10′	±10′
Accuracy ripple	1′ max	1′ max	1′ max
Operating temperature	-55°C ... + 155°C	-55°C ... + 155°C	-55°C ... + 155°C
Max Speed [min^{-1}]	10000	20000	10000
Mass [kg]	0.065	0.28	0.28
Rotor Inertia [$kgm^2 \times 10^{-6}$]	3.0	5.0	5.0

Please check the compatibility with our Motion Control with our Technical team or by consulting the Motion Control catalogue.

OPTICAL ENCODERS

The optical absolute encoders uses a high precision optical disc to measure the angular position. Single turn absolute encoder has an absolute positional information only within one turn. Multi turn absolute encoder is provided of extra gear wheels that account of several shaft revolution. Therefore the output is unique for each shaft position and revolution up to available revolutions.

HEIDENHAIN ENCODERS

Item	BMD65		BMD82 - BMD170		
	ENB1	ENB2	ENB1	ENB2	ENB7
Manufacturer	Dr. JOHANNES HEIDENHAIN GmbH				
Data interface	EnDat 2.2		EnDat 2.2		SinCos
Model	ECN1113	EQN1125	ECN1313	EQN1325	ERN 1387
Type	Single turn	Multi turn	Single turn	Multi turn	Single turn
Measuring principle	Optical		Optical		Optical
Power supply	3.6VDC ... 14VDC		3.6VDC ... 14VDC		5 VDC ±0.5V
Current consumption	85mA (5V)	105mA (5V)	85mA (5V)	105mA (5V)	<120 mA
Periods per revolution	512	512	2048	2048	2048
Position per revolution	13 bit	13 bit	13 bit	13 bit	16 bit (1)
Revolutions	-	12 bit	-	12 bit	-
Functional Safety	No		No		No
Operating temperature	-40°C ... +115°C		-40°C ... +115°C		-40°...+120°C
Max Speed [min^{-1}]	12000		12000		15000
Resistance to shocks	1000 m/s^2 - 6ms		2000 m/s^2 - 6ms		2000 m/s^2 - 6ms
Resistance to vibrations	200m/s^2 - 55 ... 2000Hz		300m/s^2 - 55 ... 2000Hz		300m/s^2 - 55 ... 2000Hz
Mass [kg]	0.10		0.25		0.25
Rotor Inertia [$kgm^2 \times 10^{-6}$]	0.40		2.60		2.6

(1) This resolution is obtained when used with the EM-ABS-01 acquisition module.

SICK ENCODERS

Item	BMD65		BMD82 - BMD170		BMD65 - BMD170	
	ENB3	ENB4	ENB3	ENB4	ENB11	ENB12
Manufacturer	SICK AG					
Data interface	Hiperface		Hiperface		Hiperface DSL	
Model	SKS36	SKM36	SRS50	SRM50	EKM36	EDM35
Type	Single turn	Multi turn	Single turn	Multi turn	Multi turn	Multi turn
Measuring principle	Optical		Optical		Optical	
Power supply	7VDC ... 12VDC		7VDC ... 12VDC		7VDC ... 12VDC	
Current consumption	60mA	60mA	80mA	80mA	150mA	150mA
Periods per revolution	128	128	1024	1024	-	-
Position per revolution	12 bit	12 bit	15 bit	15 bit	20 bit	24 bit
Revolutions	-	12 bit	-	12 bit	12 bit	12 bit
Functional Safety	No		No		Yes	
Operating temperature	-20°C ... +110°C		-30°C ... +115°C		-40°C ... +115°C	
Max Speed [min^{-1}]	10000		12000		12000	
Resistance to shocks	100 g / 6 ms		100 g / 6 ms		100 g / 6 ms	
Resistance to vibrations	50 g / 10 ... 2000 Hz		20 g / 10 ... 2000 Hz		50 g / 10 ... 2000 Hz	
Mass [kg]	0.07		0.20		0.10	
Rotor Inertia [$kgm^2 \times 10^{-6}$]	0.45		1.00		0.50	

Please check the compatibility with our Motion Control with our Technical team or by consulting the Motion Control catalogue.

INDUCTIVE AND CAPACITIVE ENCODERS

The absolute inductive and capacitive encoders available in the BMD series have no integral bearing. The angular position is achieved measuring high-frequency signals for encoder exploiting the inductive measuring principle or with a holistic scanning system for encoder exploiting the capacitive principle of measurement.

HEIDENHAIN ENCODER

Item	BMD65 - BMD170
	ENB8
Manufacturer	Dr. JOHANNES HEIDENHAIN GmbH
Data interface	EnDat 2.2
Model	EQI1131
Type	Multi turn
Measuring principle	Inductive
Power supply	3.6VDC ... 14VDC
Current consumption	115mA (5V)
Periods per revolution	-
Position per revolution	19 bit
Revolutions	12 bit
Functional Safety	Yes
Operating temperature	-40°C ... +115°C
Max Speed [min^{-1}]	12000
Resistance to shocks	2000 m/s^2 - 6ms
Resistance to vibrations	400m/s^2 - 55 ... 2000Hz
Mass [kg]	0.04
Rotor Inertia [$kgm^2 \times 10^{-6}$]	0.30

SICK ENCODERS

Item	BMD65 - BMD170			
	ENB5	ENB6	ENB9	ENB10
Manufacturer	SICK AG		SICK AG	
Data interface	Hiperface		Hiperface DSL	
Model	SEK37	SEL37	EEM37	EEM37
Type	Single turn	Multi turn	Multi turn	Multi turn
Measuring principle	Capacitive		Capacitive	
Power supply	7VDC ... 12VDC		7VDC ... 12VDC	
Current consumption	50mA	50mA	150mA	150mA
Periods per revolution	16	16	-	-
Position per revolution	9 bit	9 bit	15 bit	17 bit
Revolutions	-	12 bit	12 bit	12 bit
Functional Safety	No		No	Yes
Operating temperature	-40°C ... +115°C	-20°C ... +115°C	-40°C ... +115°C	-40°C ... +115°C
Max Speed [min^{-1}]	120000		120000	
Resistance to shocks	100 g / 10 ms		100 g / 6 ms	
Resistance to vibrations	50 g / 10 ... 2000 Hz		50 g / 10 ... 2000 Hz	
Mass [kg]	0.04		0.10	
Rotor Inertia [$kgm^2 \times 10^{-6}$]	0.10		0.10	

Please check the compatibility with our Motion Control with our Technical team or by consulting the Motion Control catalogue.

THERMAL PROTECTION

BMD motors are equipped with an integrated temperature sensor. A PTC thermistor can be chosen for simple protecion againts overtemperate, detecting any condition exceeding the motor class F insulation. KTY and PT1000 sensors are alternatively available, to fit any need for temperature feedback.

Options	Thermal protector	Note
PTC	1x PTC BMD 65-102 3x PTC BMD 118-170	The PTC thermistor is placed in contact with the motor winding. The thermistor switch temperature is in accordance with the insulation class F of the motor.
KTY	Type KTY 84-130	A KTY silicon semi-conductor resistance sensor is placed in contact with the motor winding. The working temperature range is from 0°C to 170°C.
TC1	PT1000	A platinum resistance temperature sensor is placed in contact with the motor winding. The PT1000 characteristic is in accordance with IEC 60751 : 2008, tolerance class B. The working temperature range is from -40°C to 250°C.

ELECTROMECHANICAL HOLDING BRAKE - F24 option

An electromagnetic holding brake is available. The brake variant can be ordered by selecting the F24 value in the brake option field.

The electromechanical brake is used as an holding brake with motor shaft stationary. Do not use it as a dynamic brake, except for emergencies such as main supply faliure.

Data of the available brake for each motor size are summarized in the following table.
When the motor is delivered without brake, the brake fitting is not possible.

The brake coil voltage supply must be 24V DC-voltage.
The brake option requires an increment of the motor length and weight.
Brake leads are wired in the power connector togheter with motor leads.

Please note that the brake option is not available when the “additional inertia” option is selected.

Motor	Rated brake torque 20°C M_b	Rated brake torque 100°C M_b	Brake voltage V_b	Brake current I_b	Brake power 20°C P_b	Inertia increase ΔJ	Mass increase Δm_M	Engaging time t_1	Release time t_2
	Nm	Nm	Vdc	A	W	$Kgm^2 \cdot 10^{-4}$	kg	ms	ms
65	2	1.8	24	0.46	11	0.068	0.2	6	25
82	4.5	4		0.5	12	0.18	0.6	7	35
102	9	8		0.75	18	0.54	1.1	7	40
118	18	15		1.0	24	1.66	2.2	10	50
145	18	15		1.0	24	1.66	2.6	10	50
170	36	32		1.1	26	5.56	4.5	22	90

Notes
t_1 Time from disconnecting the current until the rated torque is attained
t_2 Time from connecting the current until the torque decreases

ADDITIONAL INERTIA FEATURE - F1 option

BMD Permanent Magnet AC Synchronous servomotor series can be provided optionally with additional inertia.
The BMD motors with additional inertia have higher rotor moment of inertia in comparison with basic version.
Additional inertia is designed to be used in application with high load inertia. The increased moment of inertia provides a comfortable control response due to a better match between motor and load inertia.
The additional inertia option results in an increase in motor length and weight.

Motor	Inertia increase ΔJ	Mass increase Δm_M
	$Kgm^2 \cdot 10^{-4}$	kg
65	0.5	0.4
82	3	1
102	7.5	1.7
118	16	3.5
145	36	5
170	70	8.2

FORCED VENTILATION

BMD motor sizes 145 and 170 can be ordered completed with additional fan unit (forced ventilation IC 416) selecting the proper designation variants (V1R, V1S, V2R, V2S). Motors originally provided with a fan unit have the power and signal connectors rotatable as per standard BMD motors (180° x 90°).
Alternatively, the fan units are available as kit, suitable for the retrofit of standard motors. In this case the customer need to modify the existing motor to assemble the fan unit.
The fan cowl is black painted RAL 9005. Fans have metal housing and IP54 degree of protection.

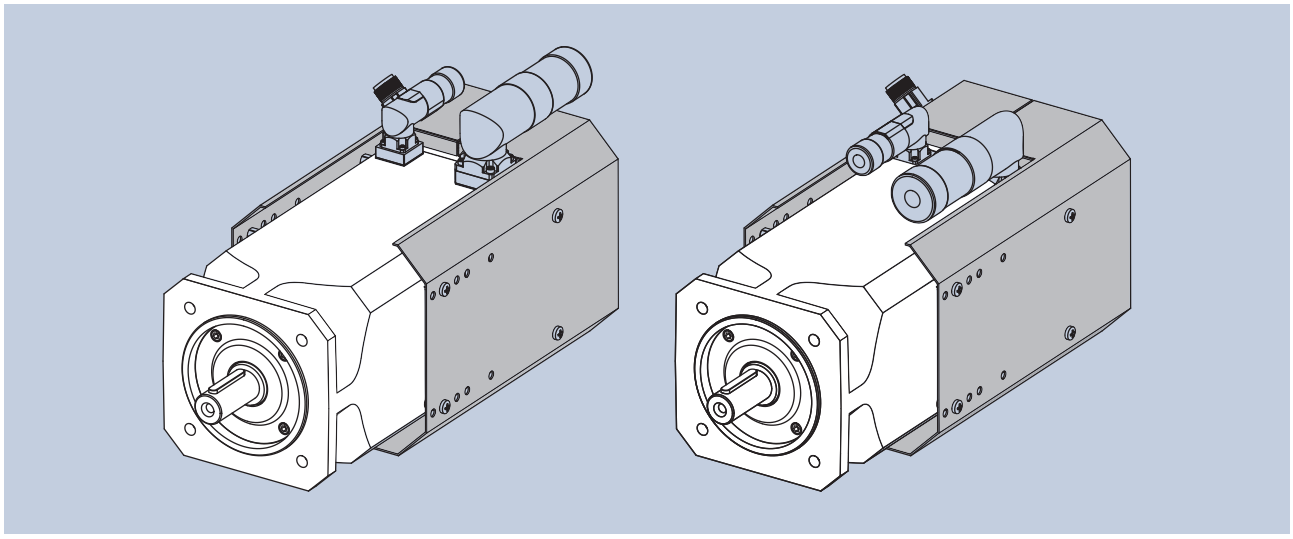

FORCED VENTILATION

KIT ORDER CODES FOR RETROFIT

To install the forced ventilation as a retrofit kit the standard BMD motor housing must be modified adding 8 threaded holes. In this configuration the motor connectors must be oriented to the drive end side and they can not rotate. Instructions for housing modifications are reported in the fan unit operation manual supplied with the kit.
The fan cowl type depends on motor variants. To select te right ventilation kit, please refer to the following tables.

Motor variant		
	Fan cowl type S	Fan cowl type L
BMD 145 16.8	SEN / RES1 / RES2 /ENB1...ENB12	-
BMD 145 16.8...F24/F1	SEN / RES1 / RES2 /ENB3...ENB6 / ENB8...ENB12	ENB1 / ENB 2 / ENB7
BMD 145 22	SEN / RES1 / RES2 /ENB3...ENB6 / ENB8...ENB12	ENB1 / ENB 2 / ENB7
BMD 145 22...F24/F1	-	SEN / RES1 / RES2 /ENB1...ENB8
BMD 170 34	SEN / RES1 / RES2 /ENB1...ENB12	-
BMD 170 34...F24/F1	SEN / RES1 / RES2 /ENB3...ENB6 / ENB8	ENB1 / ENB 2 / ENB7...ENB12
BMD 170 45	SEN / RES1 / RES2 /ENB1... ENB12	-
BMD 170 45...F24/F1	-	SEN / RES1 / RES2 /ENB1... ENB12

Fan unit variants and kit order codes				
KIT code	BMD size	Fan voltage	Fan cowl size	Connector type
19MOT0001	BMD 170	24V DC	S	Straight
19MOT0002	BMD 170	24V DC	L	Straight
19MOT0003	BMD 170	230V AC	S	Straight
19MOT0004	BMD 170	230V AC	L	Straight
19MOT0005	BMD 170	24V DC	S	Rotatable
19MOT0006	BMD 170	24V DC	L	Rotatable
19MOT0007	BMD 170	230V AC	S	Rotatable
19MOT0008	BMD 170	230V AC	L	Rotatable
19MOT0009	BMD 145	24V DC	S	Straight
19MOT0010	BMD 145	24V DC	L	Straight
19MOT0011	BMD 145	230V AC	S	Straight
19MOT0012	BMD 145	230V AC	L	Straight
19MOT0013	BMD 145	24V DC	S	Rotatable
19MOT0014	BMD 145	24V DC	L	Rotatable
19MOT0015	BMD 145	230V AC	S	Rotatable
19MOT0016	BMD 145	230V AC	L	Rotatable

Fans electrical data				
BMD size	Fan voltage	Voltage range	Power	Frequency
BMD 170	24V DC	16...28V DC	28.4 W	-
	230V AC	-	45 / 39 W	50/ 60 Hz
BMD 145	24V DC	12...30V DC	12 W	-
	230V AC	-	30 / 28 W	50/ 60 Hz

Note
In case of retrofit, check the power cable section. It must be in accordance with the power servocables matching table present in this catalog.

CONNECTIONS

The power and feedback device connections can be made by angled rotatable receptacle connector (P1N S1N or P1 S1) or by straight turning receptacle connector (P3N S3N or P3 S3) or by 1 meter length flying cable (P2, S2 or S2C).

P1N S1N
Angled rotatable receptacles

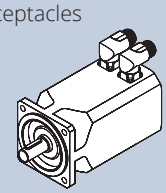

	SEN[1]	RES1	RES2	ENB1	ENB2	ENB3	ENB4	ENB5	ENB6	ENB7	ENB8	ENB9	ENB10	ENB11	ENB12
65	√	NA	√	√	√	√	√	√	√	NA	√	NA	NA	NA	NA
82	√	√	√	√	√	√	√	√	√	√	√	NA	NA	NA	NA
102	√	√	√	√	√	√	√	√	√	√	√	NA	NA	NA	NA
118	√	√	√	√	√	√	√	√	√	√	√	NA	NA	NA	NA
145	√	√	√	√	√	√	√	√	√	√	√	NA	NA	NA	NA
170	√	√	√	√	√	√	√	√	√	√	√	NA	NA	NA	NA

P2 S2-S2C
1m Flying cables

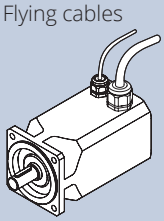

	SEN[1]	RES1	RES2	ENB1	ENB2	ENB3	ENB4	ENB5	ENB6	ENB7	ENB8	ENB9	ENB10	ENB11	ENB12
65	√	NA	NA	NA	NA	NA	NA	NA	NA	NA	NA	NA	NA	NA	NA
82	√	√	√	√	√	√	√	√	√	√	√	NA	NA	NA	NA
102	√	√	√	√	√	√	√	√	√	√	√	NA	NA	NA	NA
118	√	√	√	√	√	√	√	√	√	√	√	NA	NA	NA	NA
145	√	√	√	√	√	√	√	√	√	√	√	NA	NA	NA	NA
170	√	√	√	√	√	√	√	√	√	√	√	NA	NA	NA	NA

P3N S3N
Straight receptacles

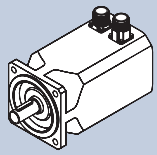

	SEN[1]	RES1	RES2	ENB1	ENB2	ENB3	ENB4	ENB5	ENB6	ENB7	ENB8	ENB9	ENB10	ENB11	ENB12
65	√	NA	√	√	√	√	√	√	√	NA	√	NA	NA	NA	NA
82	√	√	√	√	√	√	√	√	√	√	√	NA	NA	NA	NA
102	√	√	√	√	√	√	√	√	√	√	√	NA	NA	NA	NA
118	√	√	√	√	√	√	√	√	√	√	√	NA	NA	NA	NA
145	√	√	√	√	√	√	√	√	√	√	√	NA	NA	NA	NA
170	√	√	√	√	√	√	√	√	√	√	√	NA	NA	NA	NA

H1N
Angled rotatable hybrid receptacle

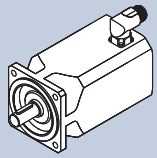

	SEN	RES1	RES2	ENB1	ENB2	ENB3	ENB4	ENB5	ENB6	ENB7	ENB8	ENB9	ENB10	ENB11	ENB12
65	NA	NA	NA	NA	NA	NA	NA	NA	NA	NA	√	√	√	√	√
82	NA	NA	NA	NA	NA	NA	NA	NA	NA	NA	√	√	√	√	√
102	NA	NA	NA	NA	NA	NA	NA	NA	NA	NA	√	√	√	√	√
118	NA	NA	NA	NA	NA	NA	NA	NA	NA	NA	√	√	√	√	√
145	NA	NA	NA	NA	NA	NA	NA	NA	NA	NA	√	√	√	√	√
170	NA	NA	NA	NA	NA	NA	NA	NA	NA	NA	NA	√	√	√	√

H2 – H2C
1m Flying hybrid cable

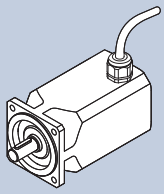

	SEN	RES1	RES2	ENB1	ENB2	ENB3	ENB4	ENB5	ENB6	ENB7	ENB8	ENB9	ENB10	ENB11	ENB12
65	NA	NA	NA	NA	NA	NA	NA	NA	NA	NA	NA	√	√	√	√
82	NA	NA	NA	NA	NA	NA	NA	NA	NA	NA	NA	√	√	√	√
102	NA	NA	NA	NA	NA	NA	NA	NA	NA	NA	NA	√	√	√	√
118	NA	NA	NA	NA	NA	NA	NA	NA	NA	NA	NA	√	√	√	√
145	NA	NA	NA	NA	NA	NA	NA	NA	NA	NA	NA	√	√	√	√
170	NA	NA	NA	NA	NA	NA	NA	NA	NA	NA	NA	√	√	√	√

H3N
Straight hybrid receptacle

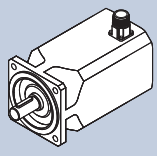

	SEN	RES1	RES2	ENB1	ENB2	ENB3	ENB4	ENB5	ENB6	ENB7	ENB8	ENB9	ENB10	ENB11	ENB12
65	NA	NA	NA	NA	NA	NA	NA	NA	NA	NA	√	√	√	√	√
82	NA	NA	NA	NA	NA	NA	NA	NA	NA	NA	√	√	√	√	√
102	NA	NA	NA	NA	NA	NA	NA	NA	NA	NA	√	√	√	√	√
118	NA	NA	NA	NA	NA	NA	NA	NA	NA	NA	√	√	√	√	√
145	NA	NA	NA	NA	NA	NA	NA	NA	NA	NA	√	√	√	√	√
170	NA	NA	NA	NA	NA	NA	NA	NA	NA	NA	NA	NA	NA	NA	NA

[1] SEN version, when available, has only the power connector (P1/P1N/P3/P3N) or the power cable (P2).

POWER CONNECTIONS

The 6-pin power connector of the motor with feedback includes the pins of the motor supply and the ones for the brake supply (if provided). The sensorless motor version has 8-pin power connector and includes also the pins for the thermal protection. Same marking is used for motor with flying cable connection.

Motor with Feedback Device / BMD65 - BMD145

Power connector layout			Power cable identification
Connector PIN number	Description		Wire label or color
1	Phase U	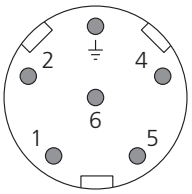	L1 / 1 / U
2	Phase V		L2 / 2 / V
⏚	Earth - SL		Yellow - Green
4	Brake +		White
5	Brake -		Black
6	Phase W		L3 / 3 / W

Motor with Feedback Device / BMD170

Power connector layout			Power cable identification
Connector PIN number	Description		Wire label or color
U	Phase U	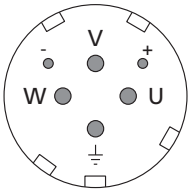	L1 / 1 / U
V	Phase V		L2 / 2 / V
W	Phase W		L3 / 3 / W
⏚	Earth - SL		Yellow - Green
+	Brake +		White
-	Brake -		Black

Sensorless motor / BMD65 - BMD145

Power connector layout			Power cable identification
Connector PIN number	Description		Wire label or color
1	Phase U	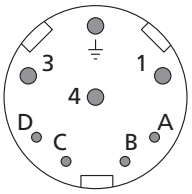	L1 / 1 / U
⏚	Earth - SL		Yellow - Green
3	Phase W		L3 / 3 / W
4	Phase V		L2 / 2 / V
A	Thermal protector +		White / 5
B	Thermal protector -		Black / 6
C	Brake +		7
D	Brake -		8

Sensorless motor / BMD170

Power connector layout			Power cable identification
Connector PIN number	Description		Wire label or color
U	Phase U	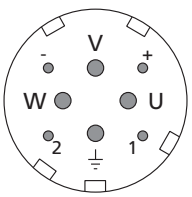	L1 / 1 / U
V	Phase V		L2 / 2 / V
W	Phase W		L3 / 3 / W
⏚	Earth - SL		Yellow - Green
1	Thermal protector +		White / 5
2	Thermal protector -		Black / 6
+	Brake +		7
-	Brake -		8

SIGNAL CONNECTIONS

The signal connector gathers the feedback device signals and the thermal protection terminal. Each feedback device has proper signal connector layout. Variants with flying cable have different termination on the inverter feedback module side. S2 variant has lead wires with ferrules for connection to terminals. S2C variant has D-SUB male standard connector with layout in accordance with the Bonfiglioli interface module.

Motor with Resolver (RES1/RES2) / BMD65 - BMD170

Signal connector layout			Signal cable identification
Connector PIN number	Description		Wire color [1]
1	Sin -		Brown
2	Sin +		Green
3	-		not connected
4	Shield cable		-
5	-		not connected
6	-		not connected
7	Exct -		Black
8	Thermal protector -		White (0.50 mm²)
9	Thermal protector +		Brown (0.50 mm²)
10	Exct +		Red
11	Cos +		Gray
12	Cos -		Rose

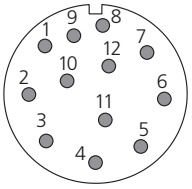

Note
(1) Wires substituted by D-SUB connector in S2C motor option and MSC - RES SC signal cable

Motor with EnDat Encoder (ENB1/ENB2/ENB8) / BMD65 - BMD170

Signal connector layout			Signal cable identification
Connector PIN number	Description		Wire color [3]
1	UP SENSOR		Violet
2	-		not connected
3	-		not connected
4	0V SENSOR		Yellow
5	Thermal protector -		Blue (0.50 mm²)
6	Thermal protector +		White (0.50 mm²)
7	UP		White Green
8	Clock +		Blue
9	Clock -		Black
10	0V		Brown Green
11	Shield cable		-
12	B + [1]		Red Black [2]
13	B - [1]		Green Black [2]
14	DATA +		Gray
15	A + [1]		Blue Black [2]
16	A - [1]		Yellow Black [2]
17	DATA -		Rose

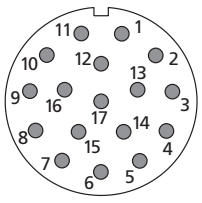

Note
(1) Signals not available for encoder ENB8
(2) Wires to be cut for cable MSC - EN1 FW in case of encoder ENB8
(3) Wires substituted by D-SUB connector in S2C motor option and MSC - EN1 SC signal cable

SIGNAL CONNECTIONS

Motor with Hiperface Encoder (ENB3/ENB4/ENB5/ENB6) / BMD65 - BMD170			
Signal connector layout			Signal cable identification
Connector PIN number	Description		Wire color [1]
1	Sin +		Green
2	Sin -		Brown
3	RS485 +		Blue
4	-		not connected
5	Shield cable		-
6	-		not connected
7	GND (0V)		Black
8	Thermal protector -		White (0.50 mm²)
9	Thermal protector +		Brown (0.50 mm²)
10	+ Vdc		Red
11	Cos +		Gray
12	Cos -		Rose
13	RS485 -		Violet
14	-		not connected
15	-		not connected
16	-		not connected
17	-		not connected

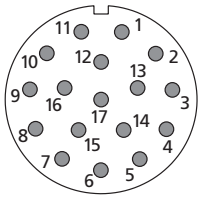

Note
(1) Wires substituted by D-SUB connector in S2C motor option and MSC - EN3 SC signal cable

Motor with Sincos Encoder (ENB7) / BMD82 - BMD170			
Signal connector layout			Signal cable identification
Connector PIN number	Description		Wire color [1]
1	Sin +		Blue Black
2	Sin -		Yellow Black
3	R+		Blue
4	D-		Brown
5	C+		Gray
6	C-		Rose
7	0VL SENSOR		Yellow
8	Thermal protector +		White (0.50 mm²)
9	Thermal protector -		Blue (0.50 mm²)
10	Vencs		White Green
11	Cos +		Red Black
12	Cos -		Green Black
13	R -		Black
14	D +		Green
15	0VL		Brown Green
16	Venc		Violet
17	Shield cable		-

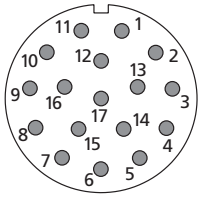

Note
(1) Wires substituted by D-SUB connector in S2C motor option and MSC - EN7 SC signal cable

HYBRID CONNECTIONS

The hybrid connection is mandatory for motor with ENB9...ENB12 encoders and an alternative option for ENB8 encoder. Hybrid connector or hybrid cable supply power to motor and brake (if provided) and include encoder signals cable. Thermal protector data are available through the encoder digital protocol.
A power connector is proposed for encoders ENB9 ... ENB12 and sizes 65 ... 145. Hybrid connectors with ethernet inserts are proposed for encoders ENB9 ... ENB12 and size 170 as well as for encoder ENB8 and sizes 65 ... 145. Flying hybrid cable for ENB9... ENB12 encoders is available with signal lead wires with ferrules for connections to screw terminals (H2) or alternatively with D-SUB male standard connector with layout in accordance with the Bonfiglioli interface module (H2C).

Motor with Hiperface DSL Encoder (ENB9/ENB10/ENB11/ENB12) / BMD 65 – BMD 145

Hybrid connector layout			Hybrid cable identification
Connector PIN number	Description		Wire label or color [1]
1	Phase U	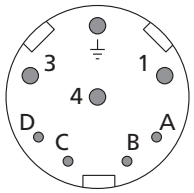	L1 / 1 / U
⏚	Earth - SL		Yellow – Green
3	Phase W		L3 / 3 / W
4	Phase V		L2 / 2 / V
A	+Us / DSL +		White [1]
B	GND / DSL -		Blue [1]
C	Brake +		White
D	Brake -		Black

Note
(1) Wires substituted by D-SUB connector in H2C motor option and OCM - CD2 hybrid cable

Motor with Hiperface DSL Encoder (ENB9/ENB10/ENB11/ENB12) / BMD 170

Hybrid connector layout			Hybrid cable identification
Connector PIN number	Description		Wire label or color [1]
U	Phase U	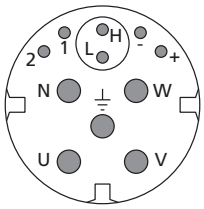	L1 / 1 / U
V	Phase V		L2 / 2 / V
W	Phase W		L3 / 3 / W
N	-		Not connected
⏚	Earth - SL		Yellow – Green
1	-		Not connected
2	-		Not connected
+	Brake +		White
-	Brake -		Black
H	+Us / DSL +		White [1]
L	GND / DSL -		Blue [1]

Note
(1) Wires substituted by D-SUB connector in H2C motor option and OCM - CD4 hybrid cable

Motor with Endat Encoder (ENB8) / BMD 65 – BMD 145

Hybrid connector layout			Hybrid cable identification
Connector PIN number	Description		Wire label or color
A	Phase U	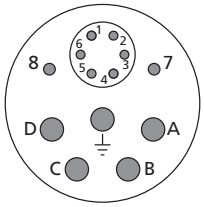	Blue
B	Phase V		Brown
C	Phase W		Black
D	-		Not connected
⏚	Earth - SL		Yellow - Green
1	Up		Brown green [1]
2	0V		White green [1]
3	DATA +		Gray [1]
4	DATA -		Pink [1]
5	CLOCK +		Violet [1]
6	CLOCK -		Yellow [1]
7	Brake -		White green [1]
8	Brake +		White blue [1]

Note
(1) Wires substituted by D-SUB connector in H2C motor option and OCM – CE2 hybrid cable

FAN UNIT CONNECTIONS

Motor with Fan unit (V1R/V1S/V2R/V2S options) / BMD65 - BMD170			
Fan unit connector layout			Fan unit cable
PIN	DESCRIPTION		WIRE LABEL OR COLOR
1	-	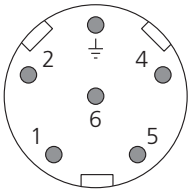	Not connected
2	-		Not connected
⏚	Earth		Yellow-Green
4	+VDC / Phase		1
5	- VDC / Neutral		2
6	-		Not connected

SERVOCABLES

The word servocable is referred to prefabricated cable connecting Bonfiglioli servomotor to respective inverter.
A servocables selection is available for power supply and sensor feed-back, justifying the distinction between power cables and signal cables.
A power cable provides power supply to motor and it also feed the brake when present. The (optional) fan unit have a dedicated power cable.
The signal cables instead are in charge of transmission of electrical signals generated by feed-back equipment installed on the motor. The same cable is also used to convey the thermal protection.
Hybrid cables provide energy to both motor and brake while conveying encoder signals. In this cases thermal protector is managed via the encoder protocol.
All servocables are available in three fixed lengths (3 m, 5 m, 10 m) providing users with an exhaustive offer of configurations for several customers' needs.
Other lengths are available on request.

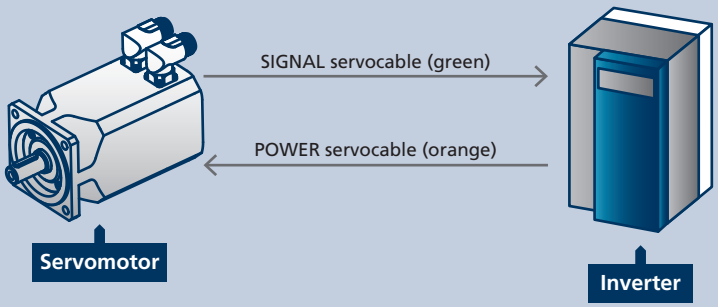

POWER SERVOCABLES

Motor cable



Inverter side *Motor side*

The power cables fulfil the following technical requirements:

Technical Data	
Properties	Oil resistant shielded cable for dynamic laying
Conductor	Tinned Stranded Cu wire complying with IEC 60228 Cl 5 / 6
Outer Sheath	PUR or equivalent thermoplastic material. Color: orange RAL 2003 for motor cable ; grey RAL 7040 for fan unit
Inner Sheath	PP or TPE
Tinned Cu braid Shield	Coverage overall screen > 80%

Electrical Data	
Nom. Volt. Power cores	U_0/U 600/1000V
Nom. Volt. Control cores	U_0/U 300/500V
AC Test Volt. Power cores	4 kV
AC Test Volt. Control cores	1 kV
Insulation Resistance	> 5 MOhm/km

Mechanical Data	
Service Temperature	-15 / +80 °C
Minimum Bending Radius	10 x D
N° bending cycles	≥ 10^6
Max Speed	≥ 180 m/min
Max Acceleration	≥ 15 m/s^2

Standard and certifications
UL/CSA, RoHS, DESINA

Fan unit Power Cables

Fan unit cables are recognized by the grey color. The conductors cross-section is 1.5 mm2. On supply side the cable terminates with flying leads covered by ferrules for plug-in into terminals. On motor side the cable is equipped with metal circular plug with Speed-Tech technology for easy and sure plug-in with corresponding fan unit receptacle.

MFC

03

Cable length
03 3 m
05 5 m
10 10 m

C1

Connector size and type
C1 6-pin (fan unit motor, size 145...170)

Motor Power Cables

Power cables are recognized by the orange color according to Desina standard. The conductors cross-section depends on the motor nominal current. In order to match different currents absorbed by different motor sizes, the power cables are available with four conductors cross sections (1.5 mm^2, 2.5 mm^2, 4.0 mm^2, 10.0 mm^2). On inverter side, every cable terminates with flying leads covered by ferrules for plug-in into terminals. On motor side the cable is equipped with metal circular plug with Speed-Tech technology for easy and sure plug-in with corresponding motor rotatable receptacle. Power connectors have 6 pins for motor with feedback and 8 pins for sensorless motor variants.

MPC

03

Cable length
03 3 m
05 5 m
10 10 m

015

Phase wire section
015 1.5 mm^2
025 2.5 mm^2
040 4 mm^2
100 10 mm^2

NB

Brake wires
NB no brake motor
B brake motor

C1

Connector size and type
C1 6-pin (feedback motor, size 65...145)
C2 6-pin (feedback motor, size 170)
C3 8-pin (sensorless motor, size 65...145)
C4 8-pin (sensorless motor, size 170)

POWER SERVOCABLES

In order to help the user in the servomotor cable selection, the following matching tables are proposed. Field XX refers to the cable length (03, 05, 10), while field YY refers to the brake variant (NB, B): see previous page for fields description.

Size	Stall torque	Nominal speed				
	Nm	1600 min^{-1}	3000 min^{-1}	4500 min^{-1}	5500 min^{-1}	6000 min^{-1}
400V NOMINAL VOLTAGE – MOTOR WITH FEEDBACK						
65	-	MPC XX 015 YY C1				
82	-					
102	-					
118	5,6					
	10,2					
	14			MPC XX 025 YY C1		
145	16,8					
	22			MPC XX 040 YY C1		
170	34	MPC XX 040 YY C2	MPC XX 100 YY C2	Not available		
	45					
400V NOMINAL VOLTAGE – SENSORLESS MOTOR WITH CONNECTOR						
65	-	MPC XX 015 YY C3				
82	-					
102	-					
118	5,6					
	10,2					
	14			MPC XX 025 YY C3		
145	16,8					
	22			MPC XX 040 YY C3		
170	34	MPC XX 040 YY C4	MPC XX 100 YY C4	Not available		
	45					
230V NOMINAL VOLTAGE – MOTOR WITH FEEDBACK						
65	-	MPC XX 015 YY C1				
82	-					
102	4					
	7,2			MPC XX 025 YY C1		
	9,6				MPC XX 040 YY C1	
118	5,6				MPC XX 025 YY C1	
	10,2		MPC XX 025 YY C1		MPC XX 040 YY C1	
	14					
145	16,8	MPC XX 025 YY C1	MPC XX 040 YY C1		Not available	
	22					
170	34	MPC XX 040 YY C2	MPC XX 100 YY C2			
230V NOMINAL VOLTAGE – SENSORLESS MOTOR WITH CONNECTOR						
65	-	MPC XX 015 YY C3				
82	-					
102	4					
	7,2			MPC XX 025 YY C3		
	9,6				MPC XX 040 YY C3	
118	5,6				MPC XX 025 YY C3	
	10,2		MPC XX 025 YY C3		MPC XX 040 YY C3	
	14					
145	16,8	MPC XX 025 YY C3	MPC XX 040 YY C3		Not available	
	22					
170	34	MPC XX 040 YY C4	MPC XX 100 YY C4			
400V NOMINAL VOLTAGE – MOTOR WITH FEEDBACK AND FORCED VENTILATION						
145	21,5	MPC XX 015 YY C1	MPC XX 025 YY C1	MPC XX 040 YY C1		
	27,5					
170	44	MPC XX 040 YY C2	MPC XX 100 YY C2	Not available		
	60					
400V NOMINAL VOLTAGE – SENSORLESS MOTOR WITH CONNECTOR AND FORCED VENTILATION						
145	21,5	MPC XX 015 YY C3	MPC XX 025 YY C3	MPC XX 040 YY C3		
	27,5					
170	44	MPC XX 040 YY C4	MPC XX 100 YY C4	Not available		
	60					
230V NOMINAL VOLTAGE – MOTOR WITH FEEDBACK AND FORCED VENTILATION						
145	21,5	MPC XX 025 YY C1	MPC XX 040 YY C1	Not available		
	27,5	MPC XX 040 YY C1				
170	44	MPC XX 100 YY C2				
230V NOMINAL VOLTAGE – MOTOR WITH FEEDBACK AND FORCED VENTILATION						
145	21,5	MPC XX 025 YY C3	MPC XX 040 YY C3	Not available		
	27,5	MPC XX 040 YY C3				
170	44	MPC XX 100 YY C4				

SIGNAL SERVOCABLES

Signal cables are recognized by the green color according to Desina standard. The number of conductors, their cross-section and their terminal type depend on the type of trasducer to be connected.
Cables are available for connection of every feedback option, either resolver and absolute encoders. On motor side, the cable is equipped with metal circular plug with Speed-Tech technology for an easy and sure plug-in with respective rotatable receptacle present on motor.
On inverter side the cable can be executed with two different terminations:
• with D-SUB male standard connector for easy and sure plug-in with corresponding D-SUB female of the interface module.
• with ferrules for connection to terminals of the interface module.
Connections layouts are dedicated to Bonfiglioli Vectron Active Cube interface module.

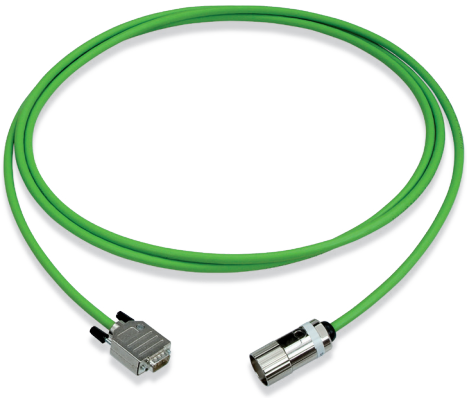

Inverter side *Motor side*

The signal cables fulfil the following technical requirements:

Technical Data	
Properties	Oil resistant shielded cable for dynamic laying
Conductor	Tinned Stranded Cu wire complying with IEC 60228 Cl 5 / 6
Outer Sheath	PUR or equivalent thermoplastic material - Color: green RAL 6018
Inner Sheath	PP or TPE
Tinned Cu braid Shield	Coverage overall screen > 80%

Electrical Data	
Nominal Voltage	30 V
AC Test Voltage	1500 V
Insulation Resistance	> 10 MOhm/km
Capacitance strand/strand	< 150 pF/m

Mechanical Data	
Service Temperature	-20 / +80 °C
Minimum Bending Radius	10 x D
N° bending cycles	≥ 10^6
Max Speed	≥ 180 m/min
Max Acceleration	≥ 15 m/s^2

Standard and Certiciations
UL/CSA, RoHS, DESINA

The ordering designation of the signal cables are described in the following table:

Feedback device	Inverter side termination	Inverter feedback module	Cable length		
			3 m	5m	10 m
RES1 / RES2	Flying leads	EM-RES-01/02 - EM-AUT-XX	MSC 03 RES FW	MSC 05 RES FW	MSC 10 RES FW
	D-SUB 9	EMA-RES-01 - EM-RES-03	MSC 03 RES SC	MSC 05 RES SC	MSC 10 RES SC
ENB1 / ENB2 / ENB8	D-SUB 15HD	EM-ABS-01 - EM-AUT-XX	MSC 03 EN1 SC	MSC 05 EN1 SC	MSC 10 EN1 SC
	Flying leads	EMA-ABS-01 - EMA-SABS-21	MSC 03 EN1 FW	MSC 05 EN1 FW	MSC 10 EN1 FW
ENB3 ... ENB6	D-SUB 15	EM-ABS-01 - EM-AUT-XX	MSC 03 EN3 SC	MSC 05 EN3 SC	MSC 10 EN3 SC
	Flying leads	EMA-ABS-01	MSC 03 EN3 FW	MSC 05 EN3 FW	MSC 10 EN3 FW
ENB7	D-SUB 15	EM-ABS-01	MSC 03 EN7 SC	MSC 05 EN7 SC	MSC 10 EN7 SC
	Flying leads	EMA-ABS-01	MSC 03 EN7 FW	MSC 05 EN7 FW	MSC 10 EN7 FW

HYBRID SERVOCABLES

Hybrid cables are recognized by the orange color according to Designa standard. The conductors cross-section of the power wires depends on the motor nominal current. As for power cables, four conductors cross sections are available (1.5mm^2, 2.5mm^2, 4.0mm^2, 10mm^2). On inverter side, power and brake wires end with flying leads covered by ferrules for plug-in into terminals. Hybrid cables have also signal conductors that on the inverter side can be executed with two different terminations:

- with D-SUB male standard connector for easy and sure plug-in with corresponding D-SUB female on the encoder interface.
- with ferrules for connection to terminals of the module interface.

D-SUB connection layouts are dedicated to Bonfiglioli interface modules. On the motor side the cable is equipped with metal circular plug with Speed-Tech technology for easy and sure plug-in with corresponding motor receptacle. Refer to page 59 Hybrid connections for plug pinout.

The hybrid cables fulfil the following technical requirements:

Technical Data	
Properties	Oil resistant shielded cable for dynamic laying
Conductor	Tinned Stranded Cu wire complying with IEC 60228 Cl 5 / 6
Outer Sheath	PUR or equivalent thermoplastic material - Color: green RAL 6018
Inner Sheath	PP or TPE
Tinned Cu braid Shield	Coverage overall screen > 80%

Electrical Data	
Nom. Volt. Power cores	U_0/U 600/1000V
Nom. Volt. Control and signal cores	U_0/U 300/500V
AC test Volt. Power cores	3kV
AC test Volt. Control and signal cores	1kV
Insulation resistance	>10MOhm/km

Mechanical Data	
Service Temperature	-20 / +80°C
Minimum bending radius	10 X D
N° bending cycles	≥106
Max Speed	≥180m/mm
Max Acceleration	≥15m/mm

Standard and Certiciations
UL/CSA, RoHS, DESINA

The cable ordering code is structured in the following mode with five fields:

OCM **03** **015** **NB** **CD1**

Motor and drive Connections
CD1 Encoder ENB9 ... ENB12 – Signal flying leads - Sizes 65 ... 145
CD2 Encoder ENB9 ... ENB12 – Signal D-SUB 15 - Sizes 65 ... 145
CD3 Encoder ENB9 ... ENB12 – Signal flying leads - Size 170
CD4 Encoder ENB9 ... ENB12 – Signal D-SUB 15 - Size 170
CE1 Encoder ENB8 – Signal flying leads - Sizes 65 ... 145
CE2 Encoder ENB8 – Signal D-SUB 15 - Sizes 65 ... 145

Brake wires
NB Without brake wires
B With brake wires

Phase wire section
015 1.5 mm^2
025 2.5 mm^2
040 4 mm^2
100 10 mm^2

Cable length
03 3 m
05 5 m
10 10 m

D-SUB 15 signal connector of versions CD1..CD4 is designed for AXV series module EMA-SABS-11, while SUD-D15 signal connector of versions CE1..CE2 is suitable to AXV series module EMA-SABS-21.

HYBRID SERVOCABLES

For helping the user during the servomotor-cable selection, the following matching tables are proposed. Field XX refers to the cable length (03, 05, 10), while field YY refers to the brake variant (NB, B): see previous page for fields description.

Size	Stall torque	Nominal speed				
	Nm	1600 min^{-1}	3000 min^{-1}	4500 min^{-1}	5500 min^{-1}	6000 min^{-1}
400V NOMINAL VOLTAGE – MOTOR WITH ENCODER ENB9 ... ENB12						
65	-	OCM XX 015 YY CD1/CD2				
82	-					
102	-					
118	5,6					
	10,2					
	14			OCM XX 025 YY CD1/CD2		
145	16,8					
	22			OCM XX 040 YY CD1/CD2		
170	34	OCM XX 040 YY CD3/CD4		Not available		
	45		OCM XX 100 YY CD3/CD4			
400V NOMINAL VOLTAGE – MOTOR WITH ENCODER ENB8						
65	-	OCM XX 015 YY CE1/CE2				
82	-					
102	-					
118	5,6					
	10,2					
	14			OCM XX 025 YY CE1/CE2		
145	16,8				OCM XX 040 YY CE1/CE2	
	22					Not available
230V NOMINAL VOLTAGE – MOTOR WITH ENCODER ENB9 ... ENB12						
65	-	OCM XX 015 YY CD1/CD2				
82	-					
102	4					
	7,2			OCM XX 025 YY CD1/CD2		
	9,6				OCM XX 040 YY CD1/CD2	
118	5,6				OCM XX 025 YY CD1/CD2	
	10,2		OCM XX 025 YY CD1/CD2		OCM XX 040 YY CD1/CD2	
	14			Not available		
145	16,8	OCM XX 025 YY CD1/CD2	OCM XX 040 YY CD1/CD2			
	22					
170	34	OCM XX 040 YY CD3/CD4	OCM XX 100 YY CD3/CD4			
230V NOMINAL VOLTAGE – MOTOR WITH ENCODER ENB8						
65	-	OCM XX 015 YY CE1/CE2				
82	-					
102	4					
	7,2			OCM XX 025 YY CE1/CE2		
	9,6				OCM XX 040 YY CE1/CE2	
118	5,6				OCM XX 025 YY CE1/CE2	
	10,2		OCM XX 025 YY CE1/CE2		OCM XX 040 YY CE1/CE2	
	14			Not available		
145	16,8	OCM XX 025 YY CE1/CE2	OCM XX 040 YY CE1/CE2			
	22					
400V NOMINAL VOLTAGE – MOTOR WITH ENCODER ENB9 ... ENB12 AND FORCED VENTILATION						
145	21,5	OCM XX 015 YY CD1/CD2	OCM XX 025 YY CD1/CD2	OCM XX 040 YY CD1/CD2		
	27,5					
170	44	OCM XX 040 YY CD3/CD4	OCM XX 100 YY CD3/CD4	Not available		
	60					
400V NOMINAL VOLTAGE – MOTOR WITH ENCODER ENB8 AND FORCED VENTILATION						
145	21,5	OCM XX 015 YY CE1/CE2	OCM XX 025 YY CE1/CE2	OCM XX 040 YY CE1/CE2		Not available
	27,5					
230V NOMINAL VOLTAGE – MOTOR WITH ENCODER ENB9 ... ENB12 AND FORCED VENTILATION						
145	21,5	OCM XX 025 YY CD1/CD2	OCM XX 040 YY CD1/CD2	Not available		
	27,5	OCM XX 040 YY CD1/CD2				
170	44	OCM XX 100 YY CD3/CD4				
230V NOMINAL VOLTAGE – MOTOR WITH ENCODER ENB8 AND FORCED VENTILATION						
145	21,5	OCM XX 025 YY CE1/CE2	OCM XX 040 YY CE1/CE2	Not available		
	27,5	OCM XX 040 YY CE1/CE2				

CABLE LAYOUT

Power cable layout

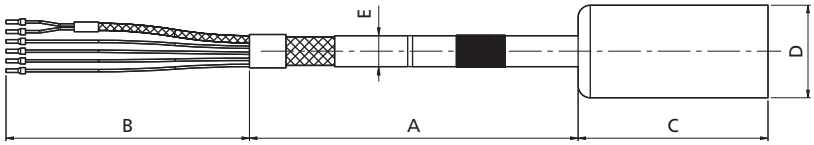

Signal cable layout

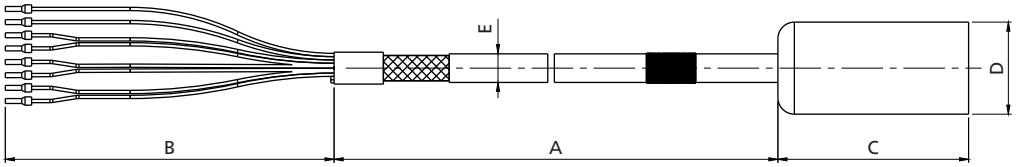

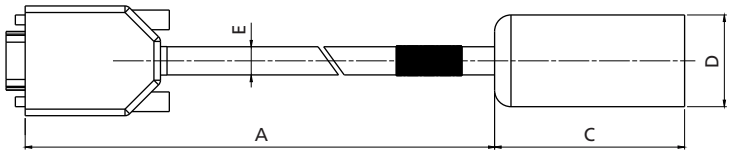

Hybrid cable layout

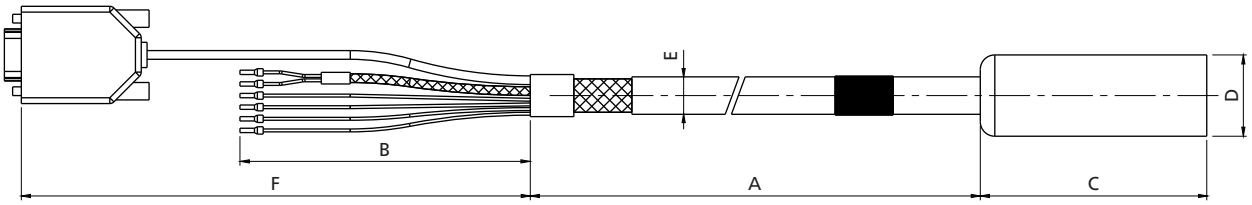

	Connector motor side	A	B	C	D	D
		[m]	[mm]	[mm]	[mm]	[mm]
Power cable	C1 / C3 C2 / C4	3 - 5 - 10 according to designation	150	78 93	28 46	- -
Signal cable	-	3 - 5 - 10 according to designation	150	58	26	-
Hybrid cable	CD1 / CD2 CD3 / CD4 CE1/ CE2	3 - 5 - 10 according to designation	150	76 93 78	28 46 28	450

	Wire section	Brake option	E_{max}
	[mm²]		[mm]
Power Cable	1.5	NB	11.6
		B	12.8
	2.5	NB	13
		B	14.2
	4	NB	14.7
		B	16.3
	10	NB	19.7
		B	21.8

	Power wire section	Connections	E
	[mm²]		[mm]
Hybrid cables	1.5	CD1 / CD2	13.1
	2.5		14.3
	4		16.1
	4	CD3 / CD4	16.1
	10		21.2
	1.5	CE1/ CE2	13.6
	2.5		14.6
	4		16.1

	Feedback designation	E
		[mm]
Signal Cable	RES	8.6
	EN1 / EN7	8.7
	EN3	8.6

Power and signal cable marking follows the labels and wire colors reported in the pages 56 - 59.

CABLE PLUGS

Cable designation	Plug order code	Description	Clamping range	Manufacturer code
MFC XX C1	712692108	TE CONNECTIVITY 923 Series - M23 6-pin power connector Pin crimping range: 6 x (0,35-2,5 mm²)	4.2 ... 6.6mm	B ST A 085 FR 03 43 0100 000
MPC XX 015 YY C1 MPC XX 025 YY C1	712692054	TE CONNECTIVITY 923 Series - M23 6-pin power connector Pin crimping range: 6 x (0,35-2,5 mm²)	7.5 ... 12mm	B ST A 085 FR 54 48 0100 153
MFC XX C1 MPC XX 040 YY C1	712692082	TE CONNECTIVITY 923 Series - M23 6-pin power connector Pin crimping range: 6 x (2,5-4 mm²)	9.5 ... 14.5mm	B ST A 085 FR 33 42 0100 000
MPC XX 100 YY C2	712692061	TE CONNECTIVITY 940 Series - M40 6-pin power connector Pin crimping range: 4 x (6-16 mm²) + 2 x (0,35-2,5 mm²)	16.5 ... 25mm	C ST A 263 FR 53 45 0020 066
MPC XX 015 YY C3 MPC XX 025 YY C3 OCM XX 015 YY CD1/CD2 OCM XX 025 YY CD1/CD2	712692074	TE CONNECTIVITY 923 Series - M23 8-pin power connector Pin crimping range: 4 x (0,35-2,5 mm²) + 4 x (0,14-1 mm²)	7.5 ... 12mm	B ST A 078 FR 48 48 0100 000
MPC XX 040 YY C3 OCM XX 040 YY CD1/CD2	712692081	TE CONNECTIVITY 923 Series - M23 8-pin power connector Pin crimping range: 4 x (2,5-4 mm²) + 4 x (0,14-1 mm²)	14 ... 17mm	B ST A 078 FR 45 59 0100 000
MPC XX 040 YY C4 MPC XX 100 YY C4	712692080	TE CONNECTIVITY 940 Series - M40 8-pin power connector Pin crimping range: 4 x (1,5-10 mm²) + 4 x (0,35-2,5 mm²)	16.5 ... 25mm	C ST A 264 FR 48 45 0020 000
MSC XX RES YY	712692053	TE CONNECTIVITY 623 Series - M23 12-pin signal connector Pin crimping range: 12 x (0,14-1 mm²)	6 ... 10mm	A ST A 021 FR 11 41 0100 000
MSC XX EN1 YY MSC XX EN3 YY MSC XX EN7 YY	712692063	TE CONNECTIVITY 623 Series - M23 17-pin signal connector Pin crimping range: 17 x (0,14-1 mm²)	6 ... 10mm	A ST A 035 FR 11 41 0100 000
OCM XX 015 YY CE1/CE2 OCM XX 025 YY CE1/CE2	YP00018253	TE CONNECTIVITY 723 Series - M23 5+2+6-pin hybrid connector Pin crimping range: 4 x (0,35-2,5 mm²) + 2 x (0,14-1 mm²) + 6 x (0,03-0,34 mm²)	9.5 ... 14.5mm	H 51 A 425 FR 12 42 0100 000 + 1x 40.A702.00 + 6x 60.278.11
OCM XX 040 YY CE1/CE2	YP00018276	TE CONNECTIVITY 723 Series - M23 5+2+6-pin hybrid connector Pin crimping range: 4 x (2,5-4 mm²) + 2 x (0,14-1 mm²) + 6 x (0,03-0,34 mm²)	14 ... 17mm	H 51 A 425 FR 13 59 0100 000 + 1x 40.A702.00 + 6x 60.278.11
OCM XX 040 YY CD3/CD4 OCM XX 100 YY CD3/CD4	YP00018316	TE CONNECTIVITY 740 Series - M40 5+4+2-pin hybrid connector Pin crimping range: 5 x (1,5-10 mm²) + 4 x (0,50-1,5 mm²) + 2 x (0,14-1,00 mm²)	16.5 ... 25mm	H 81 A 501 FR 03 45 0100 000 + 1x 40.A711.00 + 2x 60.279.11

See previous pages for descriptions of XX and YY fields. Plugs are provided with a complete set of pins.

R&D Capacity







DESIGN SIMULATION

TESTING LABORATORIES

CO-ENGINEERING

The R&D department at Bonfiglioli develops cutting-edge solutions that integrate the most advanced mechanical, electrical, electronic and hydraulic technologies, responding to the most complex application challenges. **Each R&D center focuses on dedicated product lines, ensuring specialist know-how and tailor-made innovation.**

R&D CENTERS WORLDWIDE

ITALY
Bologna
Rovereto
Forlì

GERMANY
Hattingen
Krefeld

INDIA
Chennai

CHINA
Shanghai

Production: the heart of our company

OUR PRODUCTION SITES COMBINE INNOVATION AND PRECISION, REDEFINING THE CONCEPT OF OPERATIONAL EXCELLENCE.



With a fleet of 200 collaborative, high-capacity robots joining our AGVs/AMRs, we have built a seamlessly integrated **automated production ecosystem**.

We bridge the gap between production and IT infrastructure thanks to end-to-end digital integration, ensuring real-time monitoring and data-driven optimization.

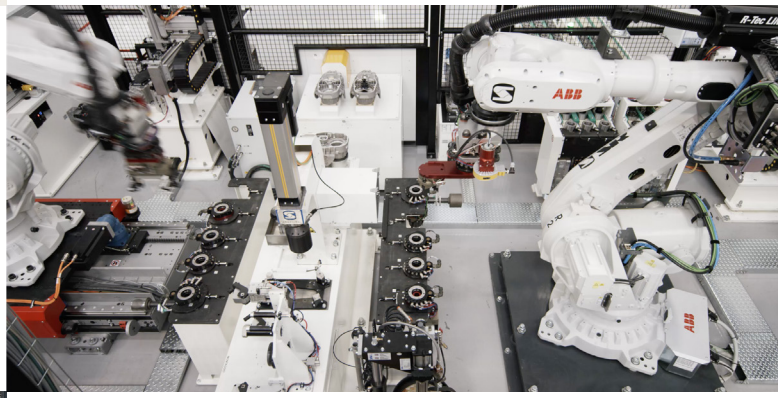



From smart picking in our **advanced warehouses** to dynamic shipping, we guarantee agile, reliable and fast global delivery.

Our worldwide presence

Thanks to an international network of closely interconnected commercial and production sites, we can guarantee the same high standards of Bonfiglioli quality anywhere at any given time. We know that our direct presence in local markets is the key to long-lasting success, so our family includes 18 production sites, 24 commercial sites and more than 550 distributors around the world.

Our organization is always close by, offering complete and efficient solutions and supporting our customers with dedicated services, co-engineering and after-sales assistance.

18 PRODUCTION SITES

24 COMMERCIAL SITES

80 COUNTRIES

550 DISTRIBUTORS

~5,000 PEOPLE

BR_CAT_BMD_STD_ENG_R04_1

Bonfiglioli global locations

AUSTRALIA
Bonfiglioli Transmission (Aust.) Pty Ltd
Plumpton NSW

BRAZIL
Bonfiglioli Redutores do Brasil Ltda
São Bernardo do Campo - São Paulo

CHINA
Bonfiglioli Drives (Shanghai) Co. Ltd.
Shanghai

Selcom Electronics (Shanghai) Co., Ltd
Shanghai

Shanghai

FRANCE
Bonfiglioli Transmission S.A.S.
Marly la Ville

GERMANY
Bonfiglioli Deutschland GmbH
Neuss

Bonfiglioli Deutschland GmbH
Krefeld

O&K Antriebstechnik GmbH
Hattingen

INDIA
Bonfiglioli Transmission Ltd.
Mobility & Wind Industries
Thirumudivakkam
Kancheepuram - Tamil Nadu

Industry & Automation Solutions
Mannur Village, Sriperumbudur Taluk
Kancheepuram - Tamil Nadu

Industry & Automation Solutions
Pune - Maharashtra

ITALY
Bonfiglioli Riduttori S.p.A.
Industry & Automation Solutions
Calderara di Reno (BO)

Industry & Automation Solutions
Carpiano

Mobility & Wind Industries
Forlì

Industry & Automation Solutions
Rovereto

Selcom Group S.p.A.
Castel Maggiore (BO)

Castel Maggiore (BO)

Cadriano (BO)

NEW ZEALAND
Bonfiglioli Transmission (Aust.) Pty Ltd
Auckland - Ellerslie

SINGAPORE
Bonfiglioli South East Asia Pte Ltd
Singapore

SLOVAKIA
Bonfiglioli Slovakia s.r.o.
Považská Bystrica

SOUTH AFRICA
Bonfiglioli South Africa Pty Ltd.
Johannesburg

SOUTH KOREA
Bonfiglioli Korea Co., Ltd.
Busan

SPAIN
Tecnotrans Bonfiglioli S.A
Castellbisbal - Barcelona

TURKEY
Bonfiglioli Türkiye Jsc
Çiğli - Izmir

UNITED KINGDOM
Bonfiglioli UK Ltd.
Warrington - Cheshire

USA
Bonfiglioli USA Inc.
Hebron - Kentucky

VIETNAM
Bonfiglioli Vietnam Co. Ltd.
Ben Cat city, Binh Duong province

PRODUCTION ASSEMBLY SALES SERVICE

Bonfiglioli

We have a relentless commitment to excellence, innovation & sustainability. Our team creates, distributes and services world-class power transmission & drive solutions to keep the world in motion.

HEADQUARTERS

Bonfiglioli S.p.A.
Via Cav. Clementino Bonfiglioli, 1
40012 Calderara di Reno - Bologna (Italy)
Tel. +39 051 6473111