Bonfiglioli



DGM

DECENTRALIZED INVERTER

We engineer dreams

Have feedback on this document? Scan here.

CONTENTS

DECENTRALISED INVERTER 4
- Product Overview 5
- Technical features 6
  - DGM 6
  - DGM Modular 7
- Main differencies 8
- Suitable sectors and applications 10
  - DGM Modular 10
  - DGM 12
- High efficiency Bonfiglioli solution 14
- BSR Power Drive System reaches IES2 Super Premium Efficiency 15

DESIGNATION 16
- Inverter selection table | DGM 17
- Wiring diagram | DGM 18
- I/O characteristics | DGM 19
- Inverter selection table | DGM-MPM 20
- External Lid configurator corrispondence | DGM-MPM . 21
- Wiring diagram | DGM-MPM 22
- I/O characteristics | DGM-MPM 23

OPTIONS 24
- Overview 25
- Main switch on board 26
- Embedded Keyboard 27
  - MMI (Man Machine Interface) keyboard integrated 27
- Quickon connectors 28
- Daisy chain power supply connectors 28
- STO Functional Safety 29
  - STO for DGM3 29
  - STO for DGM-MPM 30
- Brake rectifier module 31
  - DGM 31
  - DGM Modular 32
- Brake chopper and integrated brake resistor 33

SOFTWARE AND FIELDBUS 34
- VPlus Dec programming software 35
- Soft PLC 36
- Fieldbus overview 36

ACCESSORIES 37
- MMI (Man Machine Interface) handheld controller 38
- Programming cable 38
- Accessories overview 39

TECHNICAL DETAILS 40
- DGM1 - Mono-phase 42
- DGM3 - Three-phase 43
- DGM-MPM - Three-phase 44

CONFIGURATION GUIDELINES 46
- Environmental Conditions 47
- Standards and regulations 47
- Variable frequency drive losses in accordance with EN 61800-9-2 | DGM 48
- Variable frequency drive losses in accordance with EN 61800-9-2 | DGM-MPM 49

MOTOR-INVERTER COMBINATION RULES 50
- Motor-inverter portfolio 51
- Motor-inverter combination rules 52
- DGM1 | 1-phase Compatibility with Bonfiglioli Asynchronous Motors 53
- DGM3 | 3-phase Compatibility with Bonfiglioli Asynchronous Motors 53
- DGM-MPM | 3-phase Compatibility with Bonfiglioli Asynchronous Motors 54
- DGM-MPM | 3-phase Compatibility with Bonfiglioli Reluctance synchronous Motors 55

DIMENSION 56
- Inverter + options dimension 57
- BX motors with DGM and DGM-MPM 58
- BE motors with DGM and DGM-MPM 59
- BN and BSR motors with DGM and DGM-MPM 60
- M, ME, MX motors with DGM and DGM-MPM 61
- M-ME_FD motors with DGM and DGM-MPM 62
- MX_FD motors with DGM and DGM-MPM 63

ORDER INFO 64
- Our projection into the future 65
- Our global presence 66

Decentralised Inverter

PRODUCT OVERVIEW

Bonfiglioli experience brings you the new range of **decentralized inverters** for both Asynchronous and Permanent magnet or Reluctance synchronous motor control.
They have been designed exclusively for industrial or professional use and can be supplied as a Gear-Motor-Inverter or separately, for a wall or motor on-board assembly. Design and installation are faster compared to inverters installed in electrical cabinets since it is possible to avoid long cables, to spend less hours in electrical wiring activities and to reduce the cabinet dimension.
Thanks to its various features and options our high-level performance solution is perfect for **Packaging**, **Logistics**, **Material handling**, **Food&Beverage** and **Pumps** sectors.



Features	Benefits
Decentralised	Cost effectiveness
Sensorless Vector Control operation	Efficiency
Internal PLC	Flexibility
Intergated PID dry run protection	Reliability
Aluminium housing with IP65	Robustness
Safe torque off	Safety

Inverter series		Size	Power range per size (kW)
DGM1		A	0.37 - 1.1
DGM3		A	0.55 - 1.5
		B	2.2 - 4.0
		C	5.5 - 7.5
		D	11 - 22
DGM-MPM		A	0.55 - 2.2
		B	2.2 - 5.5
		C	5.5 - 11
		D	11 - 30

TECHNICAL FEATURES

DGM

Five sizes covering motor ratings from 0.37 to 22 kW, each available in the motor-mounted, wall-mounted and cold plate variants. The DGM drive controllers can also be fitted with the Safe Torque Off function.

1 | INVERTER SPECS

- Integrated soft PLC
- Pre-fitted cable glands
- Fan-free design up to 7.5 kW
- STO functional safety up SIL3/PLe



2 | FIELD BUS

CANopen
PROFIBUS
EtherCAT
PROFINET
Modbus RTU
sercos the automation bus

3 | OPERATION & OBSERVATION

- Potentiometer
- M12 RS485 service interface
- MMI* handheld controller
- MMI* cover option
- DGM PC software VPlus Dec
- Integrated PID control system

4 | MOTOR ADAPTATIONS

- Motor adapter concept compatible with Bonfiglioli motors

5 | PROTECTION

- IP65 class
- Robust and vibration-resistant housing concept

**MMI = Man Machine Interface*

SIL3 PLe FUNCTIONAL SAFETY
ECODESIGN EN 61800-9-2 IE2 ENERGY-EFFICIENT VARIABLE FREQUENCY DRIVES
RoHS 2011/65/EU
CE
c UL us LISTED

Asynchronous motors

TECHNICAL FEATURES

DGM Modular

Robust and highly efficient drive controller for synchronous and synchronous reluctance and asynchonous motors in the extended speed range. Extensive configuration options such as main switch, integrated braking resistor, fieldbus and option modules allow an individual composition.

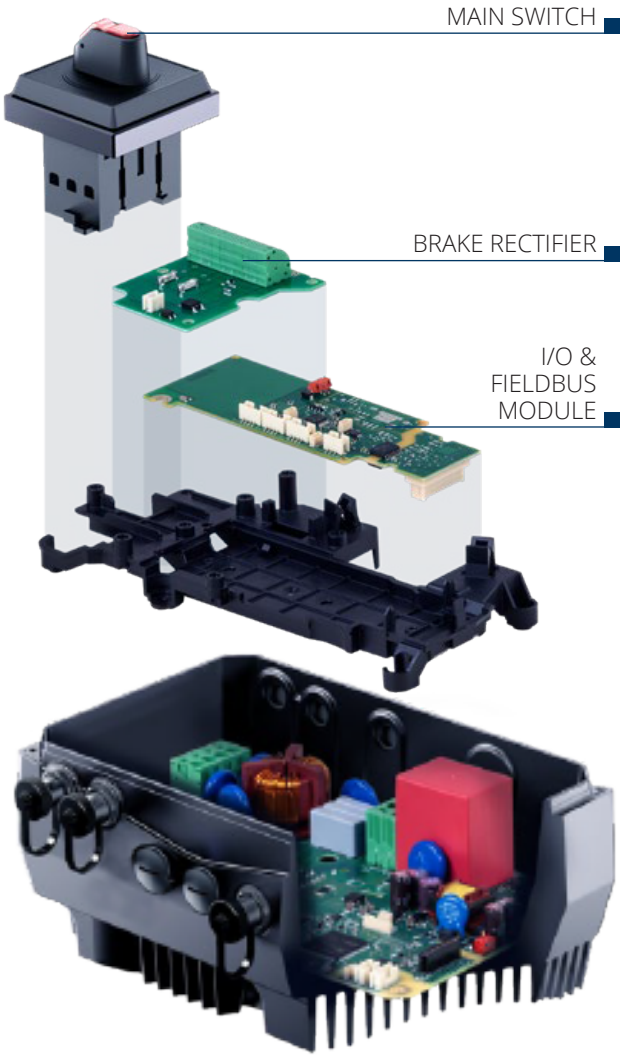

1 | INVERTER SPECS

- Pre-fitted cable glands
- Design without fans
- 100% of connections can be plugged in (Harting plug/ Quickon)
- Optional slots
- STO functional safety up SIL2/PLd
- Internal PTC brake resistor

2 | FIELD BUS

CANopen, Modbus-RTU, EtherCAT, PROFINET, EtherNet/IP, sercos the automation bus

3 | OPERATION & OBSERVATION

- Potentiometer
- M12 RS485 service interface
- Main switch
- MMI* handheld controller
- MMI* cover option
- Touch operating terminal
- DGM Modular PC software VPlus Dec

4 | MOTOR ADAPTATIONS

- Motor adapter concept compatible with Bonfiglioli motors

5 | PROTECTION

- IP65 class
- Robust and vibration-resistant housing concept

**MMI = Man Machine Interface*

SIL2 PLd FUNCTIONAL SAFETY · ECODESIGN EN 61800-9-2 IE2 ENERGY-EFFICIENT VARIABLE FREQUENCY DRIVES · IEC/EN 60034-30-1 IE5 SUPPORT SYNCHRONOUS MOTORS · RoHS 2011/65/EU · CE · cULus LISTED

- Asynchronous motors
- Synchronous reluctance motors
- Permanent magnets motors

MAIN DIFFERENCIES





	DGM 1 & DGM 3	DGM MPM
Power Supply	1 or 3 Phase	3 Phase
Power Range	0,37 to 22kW	0,55 to 30kW
Motor management	Asynchronous	Asynchronous & Synchronous (Reluctance & Permanent magnets)
PID controller	Yes	No
Soft PLC integrated	Yes	Yes
Electrical wiring time	Medium	Low
Digital I/O	4 Input / 2 Output	3* Input / 1 Output
Output Relays	2	0
Analog I/O	2 input / 1 Output	1** input / No Output
24VDC Supply	Internal and External	Internal and External***
Motor PTC plug	Yes	Yes
Potentiometer	Yes	Yes
Main switch on board	No	Yes
Fieldbus	Modbus, CANOpen, Profibus, Profinet, EtherCAT, Sercos III	Modbus, CANOpen, Profinet, EtherCAT, Sercos III, Ethernet IP
Safe Torque Off ****	SIL3/PLe	SIL2/PLd
Brake Chopper	Yes	Yes
Brake rectifier for FD brake	Yes	Yes

* *+1 digital input if avoid potentiometer and implement an additional M12 JS 3 poles connector*
** *+1 analog input if avoid potentiometer and implement an additional M12 JS 3 poles connector*
*** *only with field-bus option or STO option*
**** *STO is not available for DGM1 version of DGM*


PACKAGING
FOOD & BEVERAGE
PUMPS
MATERIAL HANDLING

SUITABLE SECTORS AND APPLICATIONS

DGM Modular

CONVEYOR FOR PACKAGING AND MATERIAL HANDLING

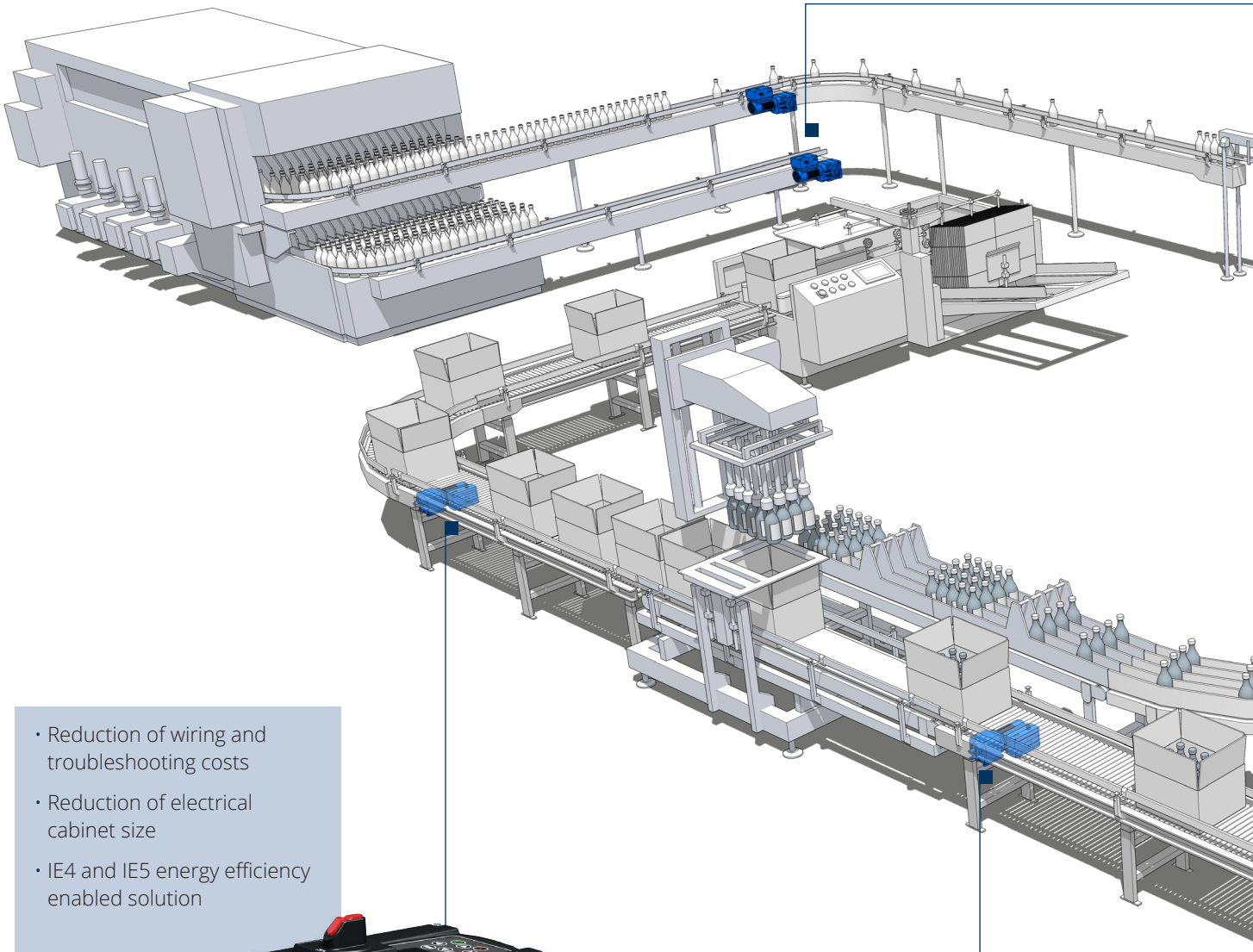

- Reduction of wiring and troubleshooting costs
- Reduction of electrical cabinet size
- IE4 and IE5 energy efficiency enabled solution

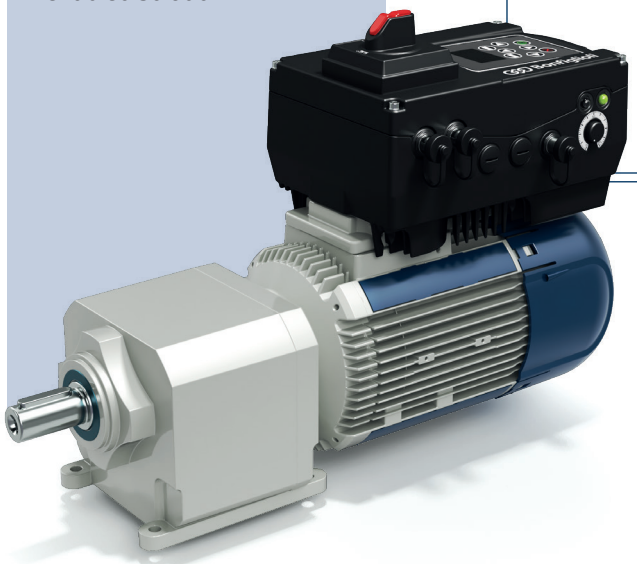

- Complete solution flexibility
- Enhanced product modularity and interchangeability
- Real time check of main gearmotor parameters through fieldbus interfaces or protocols

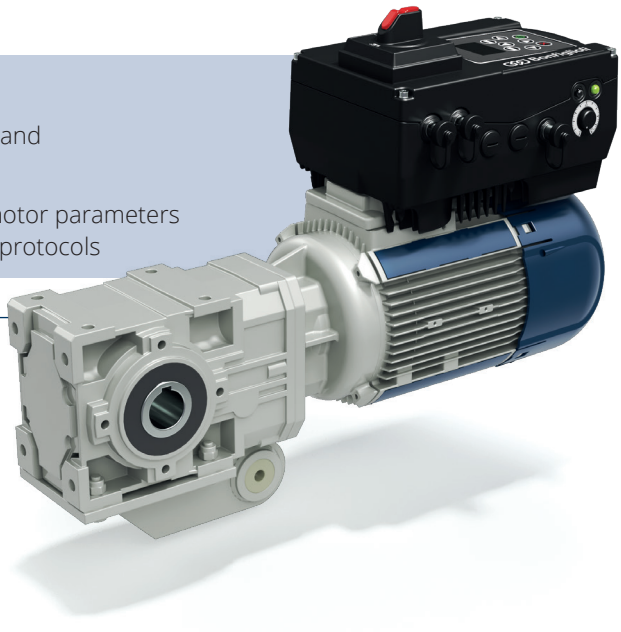

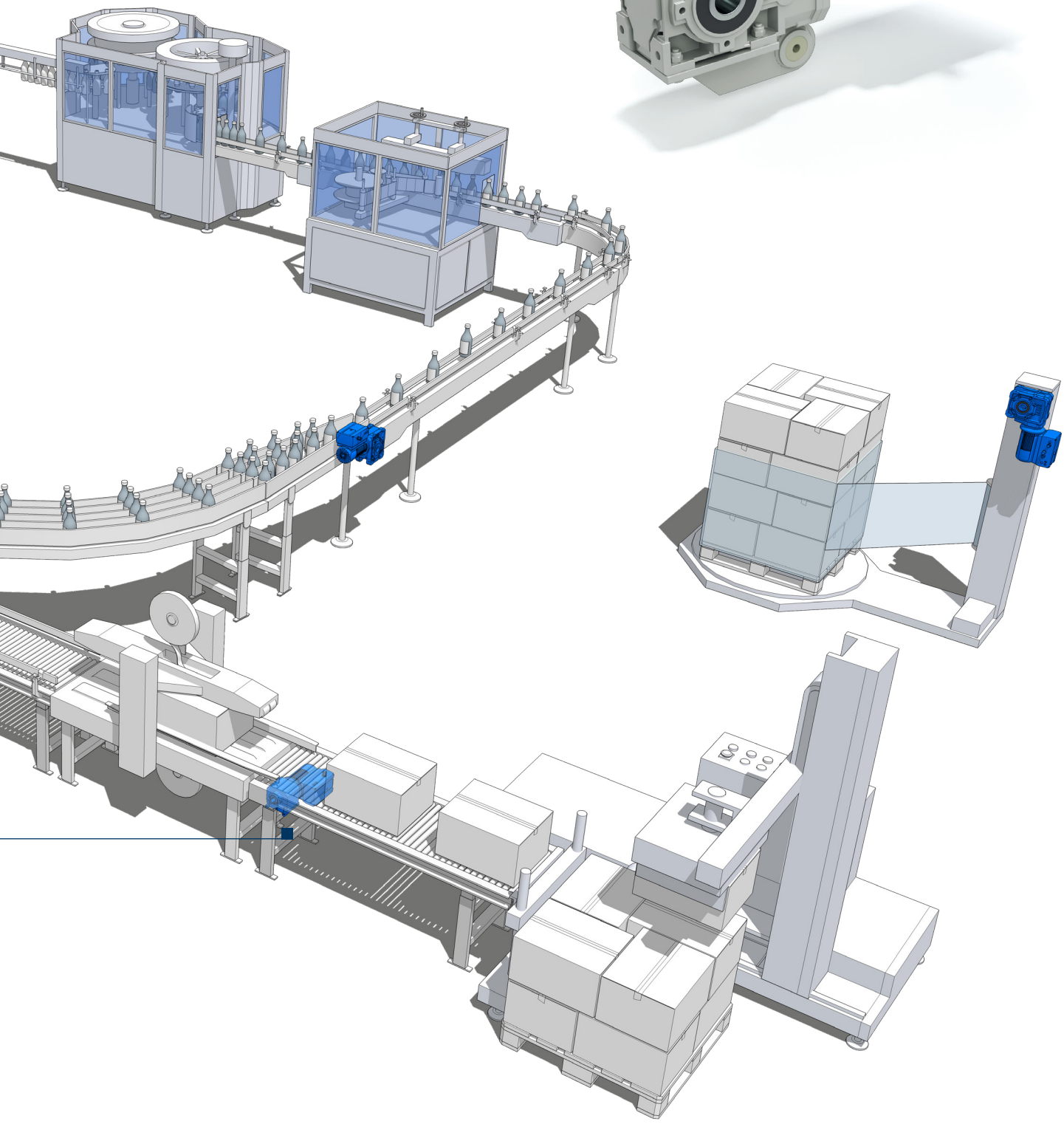

SUITABLE SECTORS AND APPLICATIONS

DGM

FOOD & BEVERAGE AND PUMPS

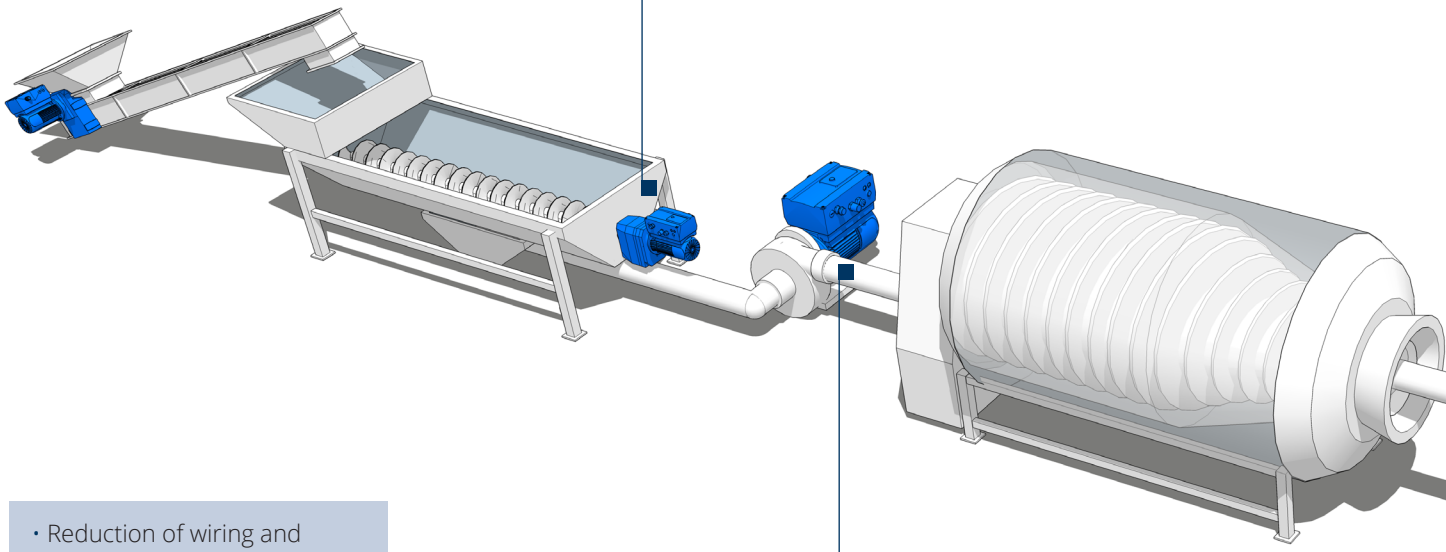

- Reduction of wiring and troubleshooting costs
- Reduction of electrical cabinet size

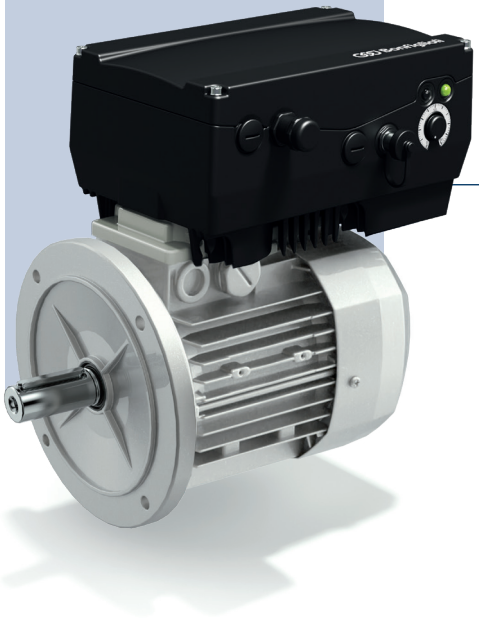

- Complete solution flexibility
- PID control with automatic speed control
- Reluctance synchronous motor control with high performant sensorless vector control at low speed
- Real time check of main gearmotor parameters through fieldbus interfaces or protocols

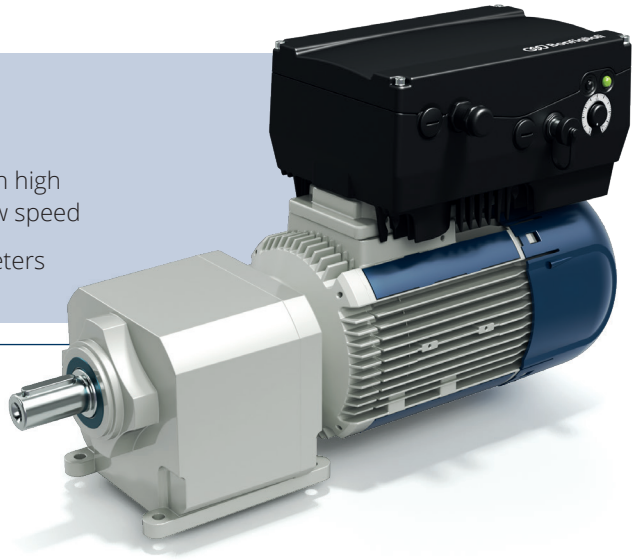

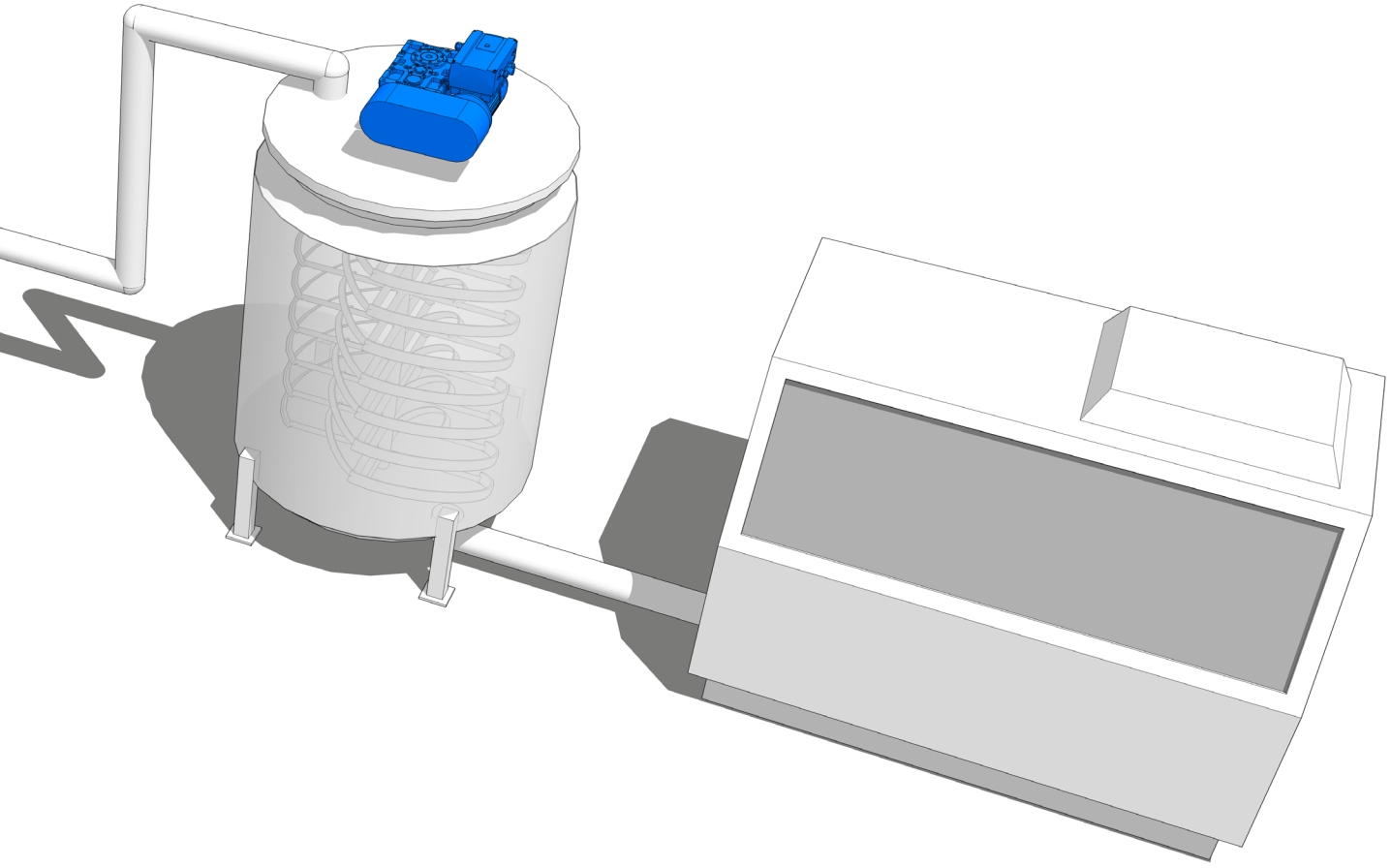

HIGH EFFICIENCY BONFIGLIOLI SOLUTION



Reluctance synchronous motor with decentralized inverter: BSR + DGM Modular

Bonfiglioli SynRM (BSR) motors improve the energy efficiency and TCO of machines and processes.

Thanks to the proven simplicity and maturity of induction motors and the very high efficiency of those with permanent magnets, BSR motors guarantee high performance and high reliability while containing life cycle costs.

DGM Modular's sensorless control over the reluctance solution is impressive and can push your applications to very slow speeds while maintaining incredible performance.

Features	Benefits
Up to IE4 efficiency level	Lower total cost of ownership
Lower operating temperature	Longer bearings lifetime
Lower intrinsic moment of inertia	Higher dynamic response
Accurate sensorless speed and torque control	Enhanced reliability
Compactness versatility	Better application layout
0,37-18,5kW with IEC flange and standard frames	Perfect for retrofit on induction and PM motors

SynRM speed torque characteristics

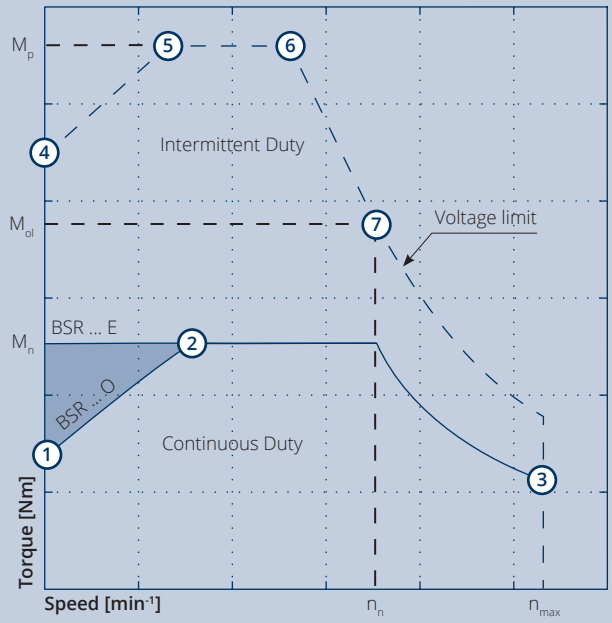

Significant working points graph

The permissible operating range of a Synchronous Reluctance motor is limited by thermal, mechanical, electromagnetic and sensorless control.

The performance characteristics of a Synchronous Reluctance motor are described by a torque/ speed operating area and refers to the BSR motor combined with Bonfiglioli drive.

Symbol	U.m.	Description						
		1	2	3	4	5	6	7
Torque	[p.u.]	0.4	1	0.4	1.5	3	3	1.5
Speed	[p.u.]	0	0.4(1) 0.2(2)	1.5	0	0.3	0.8	1
Duty	-	Continuous		Intermittent				

(1) The value is valid only for BSR motor with nominal speed 1500 min-1
(2) The value is valid only for BSR motor with nominal speed 3000 min-1

BSR POWER DRIVE SYSTEM REACHES IES2 SUPER PREMIUM EFFICIENCY

The IEC EN 61800-9-2 standard defines the efficiency classes IES0 to IES2 for the **combination of AC drives together with a motor**, defined as **Power Drive Systems** (PDS) in the regulation.



Power Drive Systems efficiency classes

Losses of the reference power drive system, corresponding to IES1 class, are defined for the 8 specific operating points. If the PDS has 20% more losses than the reference value, it will be categorized as IES0. If it has at least 20% less losses than the reference, it will become IES2.

IES0	+20% losses
IES1	IES1 = reference
IES2	-20% losses

Reluctance and induction motors comparison

Power Drive System (PDS)



ACU or DGM

BSR E series

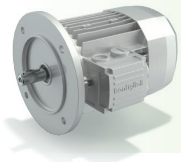

IE4 at 1500rpm

High efficiency IE4 BSR solution

Same frame size > Same output power & More Efficiency
-24% Rotor inertia
+5,4% Efficiency

BSR O series

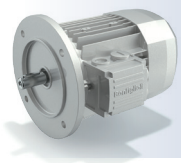

IE2/IE3 at 1500rpm
IE3/IE4 at 3000rpm

High output BSR solution

Smaller frame size > Same output power & same efficiency
-35% Rotor inertia
+0% Efficiency

Designation

INVERTER SELECTION TABLE | DGM

DGM3	0055	P02	C02	L02	I01

Mounting
I01 Without mounting adapter kit

Cover variant
L02 Standard cover + Potentiometer
L03 Cover with integrated MMI
L04 Cover with integrated MMI + Potentiometer

Control unit
C02 Modbus + 4DI + 2DO + 2AI + 1AO + 2relays
C03 CANopen + 4DI + 2DO + 2AI + 1AO + 2relays
C04 EtherCat + 4DI + 2DO + 2AI + 1AO + 2relays
C05 ProfiBus + 4DI + 2DO + 2AI + 1AO + 2relays
C08 Ethernet (ProfiNet, Sercos III) + 4DI + 2DO + 2AI + 1AO + 2relays
C12 STO + Modbus + 4DI + 2DO + 2AI + 1AO
C13 STO + CANopen + 4DI + 2DO + 2AI + 1AO
C14 STO + EtherCat + 4DI + 2DO + 2AI + 1AO
C15 STO + ProfiBus + 4DI + 2DO + 2AI + 1AO
C18 STO + Ethernet (ProfiNet, Sercos III) + 4DI + 2DO + 2AI + 1AO

Brake chopper
P01 Without brake chopper
P02 With brake chopper

Rated power

0037	0.37 kW
0055	0.55 kW
0075	0.75 kW
0110	1.1 kW
0150	1.5 kW
0220	2.2 kW
0300	3 kW
0400	4 kW
0550	5.5 kW
0750	7.5 kW
1100	11 kW
1500	15 kW
1850	18.5 kW
2200	22 kW

Inverter type
DGM1 Single-phase
DGM3 Three-phase

WIRING DIAGRAM | DGM

Example of DGM version wiring

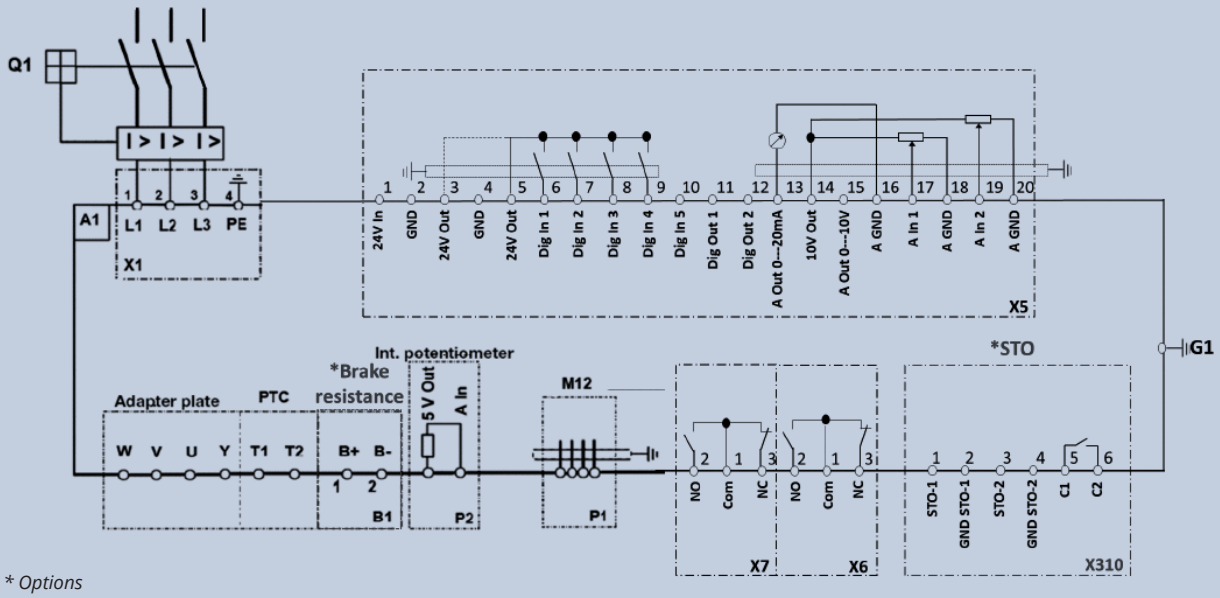

** Options*

Characters	Descriptions
A1	Drive controller of type DGM 3 (3~ 400 V)
B1	Drive controller of type DGM 3 (3~ 400 V)
G1	M6 grounding screw (connection for residual currents > 3.5 mA)
P1	RS485 programming interface (M12 plug)
P2	Internal potentiometer
Q1	Motor protection switch or load break switch (optional)
X1	Mains terminals
X5 - X6 - X 7	Digital/analogue inputs and outputs
X310	Digital inputs and outputs for functional safety (option)

I/O CHARACTERISTICS | DGM

Name	Function
Digital inputs 1– 4	• Switching level - low < 5 V / high > 15 V • I_{max} (a 24 V) = 3 mA • Rin = 8,6 kΩ
Hardware enable input	• Switching level - Low < 3 V /High > 18 V • I_{max} (a 24 V) = 8 mA
Analog inputs 1, 2	• In +/- 10 V or 0 – 20 mA • In 2 – 10 V or 4 – 20 mA • Resolution: 10 Bit • Tolerance: +/- 2 % • Voltage input: Rin = 10 kΩ • Current input: Load = 500 Ω
Digital outputs 1, 2	• Short-circuit proof • I_{max} = 20 mA
Relays 1, 2	•1 Switch-over contact (NO/NC) • Maximum making capacity * - with ohmic load (cos φ = 1): 5 A a ~ 230 V to = 30 V - with inductive load (cos φ = 0.4): 2 A a ~ 230 V to = 30 V • Maximum stepping time: 7 ms ± 0.5 ms • Electrical endurance: 100,000 switching cycles
Analog output 1 (current)	• Short-circuit proof • I out = 0.. 20 mA • Load = 500 Ω • Tolerance: +/- 2 %
Analog output 1 (voltage)	• Short-circuit proof • U_{out} = 0..10 V • I_{max} = 10 mA • Tolerance: +/- 2 %
Supply voltage 24 V	• Auxiliary voltage U = 24 V dc • Short-circuit proof • I_{max} = 100 mA • possible external power supply 24 Vdc
Supply voltage 10 V	• Auxiliary voltage U = 10 V dc • Short-circuit proof • I_{max} = 30 mA

INVERTER SELECTION TABLE | DGM-MPM

DGM-MPM	PT03	BC01	MS90	EL53	CV05	BR00	IU03

I/O module
IU00 Without I/O Module
IU03 I/O Module + M12 MMI plug
IU13 I/O Module + M12 MMI plug + STO
IU23 I/O Module + M12 MMI plug + ETHERNET (PN+EtherCAT+ETH/IP+SERCOS)
IU33 I/O Module + M12 MMI plug + ETHERNET (PN+EtherCAT+ETH/IP+SERCOS) + STO

Brake rectifier module
BR00 Without rectifier module
BR10 Without rectifier module + Main switch
BR30 Rectifier module for FD brake
BR13 Rectifier module for FD brake + Main switch (Not with ETHERNET fieldbus)

Cover Variant
CV01 Without cover variant
CV05 Display and Man machine interface
CV11 Main switch
CV15 Main switch + Display and Man Machine Interface

External Lid
EL02 Passive cooling|No_Pot|Option1
EL45 Passive cooling|No_Pot|Option2
EL53 Passive cooling|No_Pot|Option3
EL57 Passive cooling|No_Pot|Option4
EL51 Passive cooling|No_Pot|Option5
EL55 Passive cooling|No_Pot|Option6
EL09 Active cooling|No_Pot|Option1
EL62 Active cooling|No_Pot|Option2
EL64 Active cooling|No_Pot|Option3
EL66 Active cooling|No_Pot|Option4
EL01 Passive cooling|Yes_Pot|Option1
EL44 Passive cooling|Yes_Pot|Option2
EL52 Passive cooling|Yes_Pot|Option3
EL56 Passive cooling|Yes_Pot|Option4
EL50 Passive cooling|Yes_Pot|Option5
EL54 Passive cooling|Yes_Pot|Option6
EL06 Active cooling|Yes_Pot|Option1
EL61 Active cooling|Yes_Pot|Option2
EL63 Active cooling|Yes_Pot|Option3
EL65 Active cooling|Yes_Pot|Option4

I/O support
MS90 Without I/O support Module
MS00 With I/O support Module

Brake chopper
BC01 Without brake chopper
BC02 With brake chopper

Rated power
PT03 0,55kW - Size A
PT04 0,75kW - Size A
PT05 1,10kW - Size A
PT06 1,50kW - Size A
PT46 2,20kW (Low duty) - Size A
PT07 2,20kW - Size B
PT08 3,00kW - Size B
PT09 4,00kW - Size B
PT49 5,50kW (Low duty) - Size B
PT10 5,50kW - Size C
PT11 7,50kW - Size C
PT51 11 kW (Low duty) - Size C
PT12 11,0kW - Size D
PT13 15,0kW - Size D
PT14 18,5kW - Size D
PT15 22,0kW - Size D
PT55 30,0kW (Low duty) - Size D

Inverter Type
DGM-MPM 3 Phase Decentralized Inverter

EXTERNAL LID CONFIGURATOR CORRISPONDENCE | DGM-MPM

Esternal Lid	Short description	Complete option description
EL02	Passive cooling|No_Pot|Option1	Passive cooling
EL45	Passive cooling|No_Pot|Option2	Passive cooling + Brake chopper + internal Brake resistor
EL53	Passive cooling|No_Pot|Option3	Passive cooling , Phoenix Quickon, 2x M12 I/O
EL57	Passive cooling|No_Pot|Option4	Passive cooling , Phoenix Quickon, 2x M12 I/O + Brake chopper + internal Brake resistor
EL51	Passive cooling|No_Pot|Option5	Passive cooling, Harting, 2x M12 I/O
EL55	Passive cooling|No_Pot|Option6	Passive cooling, Harting, 2x M12 I/O + Brake chopper + internal Brake resistor
EL09	Active cooling|No_Pot|Option1	Active cooling
EL62	Active cooling|No_Pot|Option2	Active cooling + Brake chopper + internal Brake resistor
EL64	Active cooling|No_Pot|Option3	Active cooling, 2x M12 I/O
EL66	Active cooling|No_Pot|Option4	Active cooling, 2x M12 I/O + Brake chopper + internal Brake resistor
EL01	Passive cooling|Yes_Pot|Option1	Passive cooling + Potentiometer
EL44	Passive cooling|Yes_Pot|Option2	Passive cooling + Brake chopper + internal Brake resistor + Potentiometer
EL52	Passive cooling|Yes_Pot|Option3	Passive cooling , Phoenix Quickon, 2x M12 I/O + Potentiometer
EL56	Passive cooling|Yes_Pot|Option4	Passive cooling , Phoenix Quickon, 2x M12 I/O + Brake chopper + internal Brake resistor + Potentiometer
EL50	Passive cooling|Yes_Pot|Option5	Passive cooling, Harting, 2x M12 I/O + Potentiometer
EL54	Passive cooling|Yes_Pot|Option6	Passive cooling, Harting, 2x M12 I/O + Brake chopper + internal Brake resistor + Potentiometer
EL06	Active cooling|Yes_Pot|Option1	Active cooling + Potentiometer
EL61	Active cooling|Yes_Pot|Option2	Active cooling + Brake chopper + internal Brake resistor + Potentiometer
EL63	Active cooling|Yes_Pot|Option3	Active cooling, 2x M12 I/O + Potentiometer
EL65	Active cooling|Yes_Pot|Option4	Active cooling, 2x M12 I/O + Brake chopper + internal Brake resistor + Potentiometer

WIRING DIAGRAM | DGM-MPM

Example of DGM-MPM version wiring

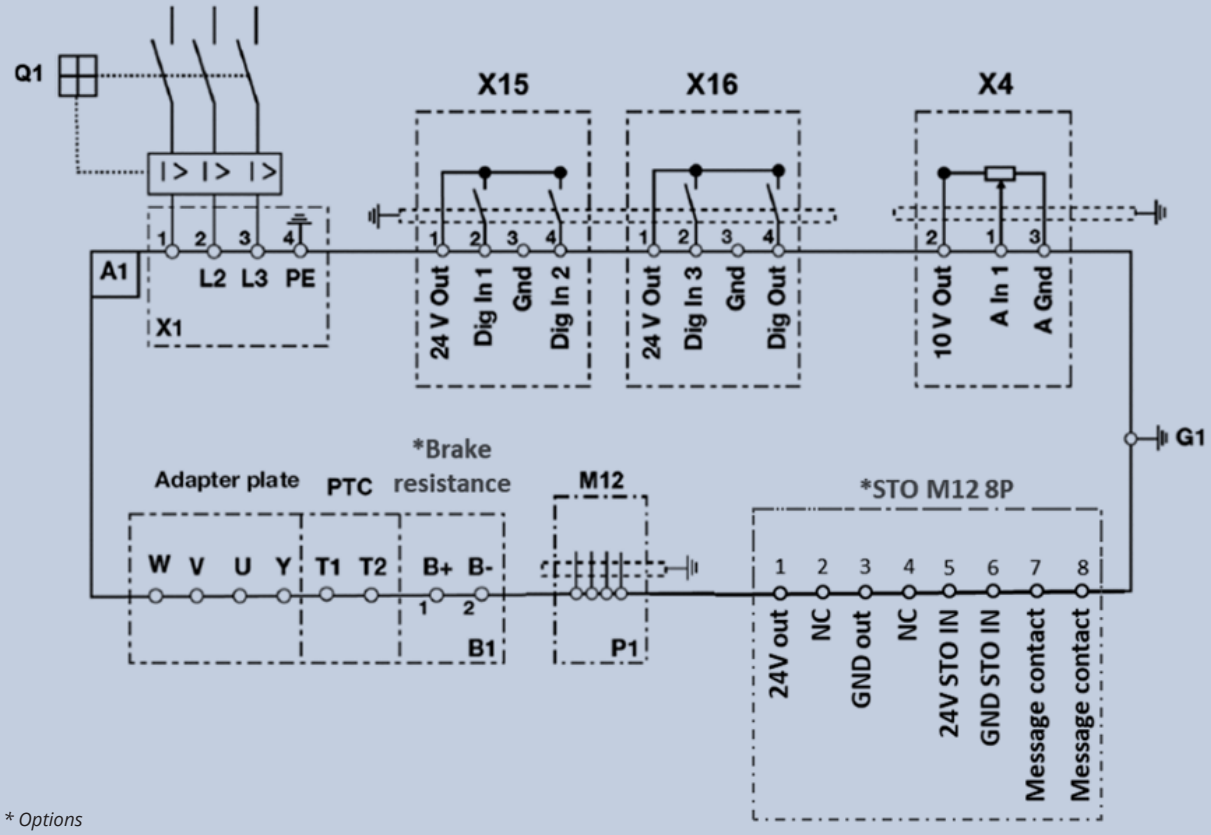

** Options*

Characters	Descriptions
A1	Drive controller of type DGM-MPM (3~ 400 V)
B1	Drive controller of type DGM-MPM (3~ 400 V)
G1	M6 grounding screw (connection for residual currents > 3.5 mA)
P1	RS485 programming interface (M12 plug)
X4	Internal potentiometer / analogue input 1
Q1	Motor protection switch or load break switch (optional)
X1	Mains terminals
X15 – X16	Digital inputs and outputs
STO	Functional safety for Safe Torque Off (option)

I/O CHARACTERISTICS | DGM-MPM

Name	Function
Digital inputs 1– 3	• Switching level low < 2 V / high > 18 V • I_{max} (at 24 V) = 3 mA • Rin = 8,6 kΩ
Analog inputs 1	• In 0 - 10 V • 10 bit resolution • Tolerance: +/- 2 % • Voltage input: Rin = 10 kΩ • Current input: Working resistance = 500 Ω
Digital outputs 1	• Short-circuit proof • I_{max} = 20 mA
Power Supply 24 V	• Auxiliary voltage U = 24 V dc • SELV • Short-circuit proof • I_{max} = 100 mA
Power Supply 10 V	• Auxiliary voltage U = 10 V dc • Short-circuit proof • I_{max} = 30 mA

Options

OVERVIEW





	DGM 3	DGM MPM
Input/Output	4 Input / 2 Output	4 Digital Input* / 1 Digital Output
Main switch on board	No	Yes
MMI keyboard integrated	Yes	Yes
Potentiometer	Yes	Yes
Safe Torque Off	SIL3/PLe**	SIL2/PLd
Brake Chopper	Yes	Yes
Brake rectifier for FD brake	Yes	Yes

* *3 digital inputs + 1 digital output (only for signaling LEDs) are standard on the I / O module. If necessary, a forth additional digital input can be added as an option (M12 connector) instead of the potentiometer.*
** *STO is not available for DGM1 version of DGM*

MAIN SWITCH ON BOARD

The integrated main switch allows the supply voltage to be fully disconnected.
The MS (Main switch) is compliant with the L1 LOTO (Lock Out Tag Out) UL standard related to safe maintenance.



Note: Available only on DGM Modular

EMBEDDED KEYBOARD

MMI (Man Machine Interface) keyboard integrated

The external lid is available in combination with a programming keyboard with its own display embedded (IP protection class will be the same as the device one). This keyboard features 8 buttons and 1 display and it is ideal for customers with special needs; The full functionality of the handheld controller, combined with 5 freely selectable status screens, enables parameterization and operation on the drive controller itself.

The embedded keyboard can be used to program the inverter and display current values and alarms.



Note: Available on both DGM and DGM-MPM

QUICKON CONNECTORS

The QUICKON connector from Phoenix Contact allows with its comfortable plug connection a simple connection of the supply voltage.



NOTE: Quickon connectors are available only with DGM Modular

DAISY CHAIN POWER SUPPLY CONNECTORS

Robust industrial connectors from Harting enable fast connection of the supply voltage. Also a looping (daisy chain) is possible with this option.

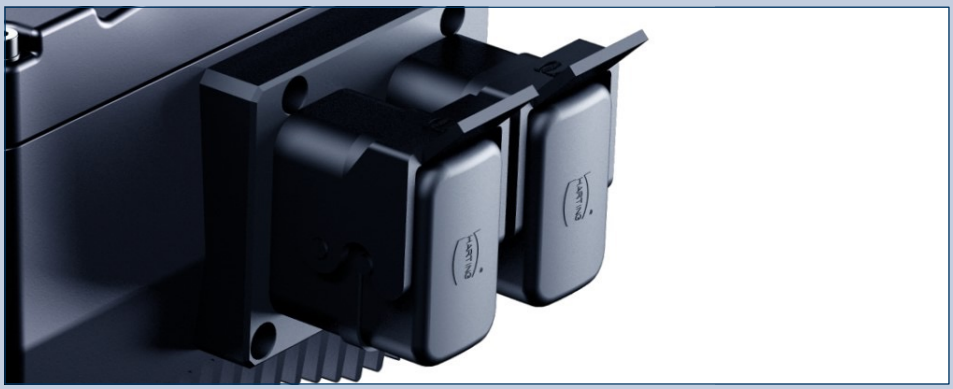

Bonfiglioli provides only the harting socket with the insert fixed on top. The customer must order separately the connector (case + insert) to a connector supplier.

NOTE: The option is available only on DGM Modular

STO FUNCTIONAL SAFETY

The Machine Directive defines the safety requirements for each machine. In particular, all machine movements must be controlled by a safety system that, in case of emergency, can stop the motor, switch them off and prevent their restart, until normal conditions are restored.
For this purpose, both the DGM3* and the DGM-MPM can be equipped with the Safe Torque Off (STO) function. This function is controlled via two special redundant safety channels, both with positive reference and with ground reference.

** DGM1 cannot be equipped with the STO.*

STO for DGM3:

TÜV SIL3 EN IEC 62061 STO PLe EN ISO 13849-1

In the STO version, the two output relays are replaced by the two STO safety channels and related feedback contacts, while the Hardware enable of the standard version is replaced by digital input 5, used to activate the Safe Stop 1 (SS1) function (when this function is triggered, the motor is braked with the ramp set in the relevant parameter, and then secured with the STO function).
In order to be utilized, the SS1 function must be managed with the help of an external safety device (i.e. a control unit or a safety PLC)

Name	Value
STO max. response time*	50 ms
PELV/SELV STO channel (nominal) supply voltage	24 Vdc
PELV/SELV STO supply voltage tolerance (referred to the nominal voltage)	± 25 %
STO channel current absorption with nominal voltage	typ. 65 mA
Start-up phase peak current (2.5 ms)	400 mA
Compatibility: Max OSSD pulse	1 ms
Compatibility: Min. OSSD pulse time	10 ms
STO Input Low	0...5 Vdc
STO Input High STO Input High when operating with OSSD signals	18...30 Vdc 19.2...30 Vdc

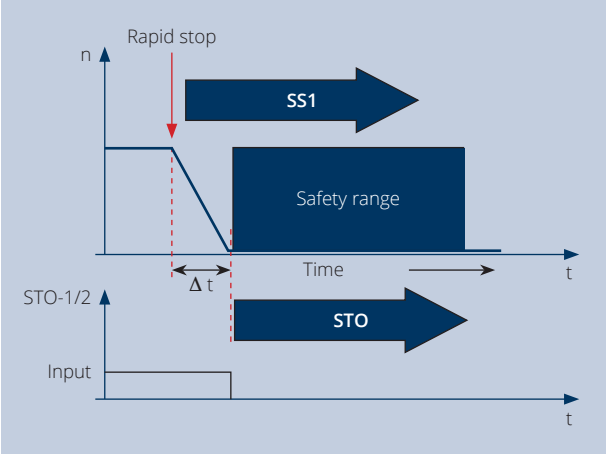

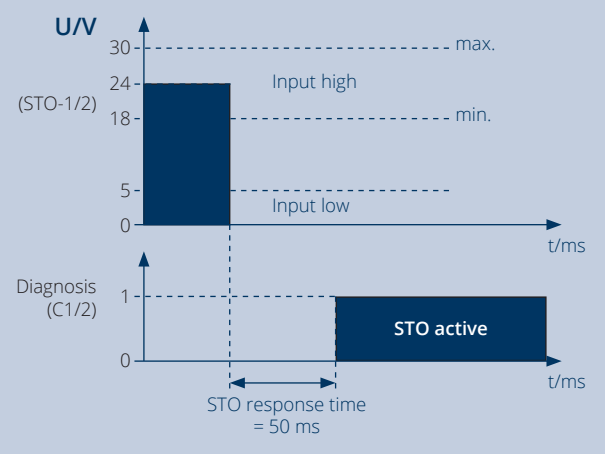

* *The STO response time is the time between deactivation of the STO input signal and the definite fail-safe pulse block.*

STO FUNCTIONAL SAFETY

STO for DGM-MPM:

TÜV SIL2 EN IEC 62061 STO PLd EN ISO 13849-1

Name	Value
STO max. response time*	50 ms
PELV/SELV STO channel (nominal) supply voltage	24 Vdc
PELV/SELV STO supply voltage tolerance (referred to the nominal voltage)	± 25 %
STO channel current absorption with nominal voltage	typ. 80 mA
Start-up phase peak current (2.5 ms)	500 mA
Compatibility: Max OSSD pulse	1 ms
Compatibility: Min. OSSD pulse time	10 ms
STO Input Low	0...5 Vdc
STO Input High STO Input High when operating with OSSD signals	18...30 Vdc 19.2...30 Vdc

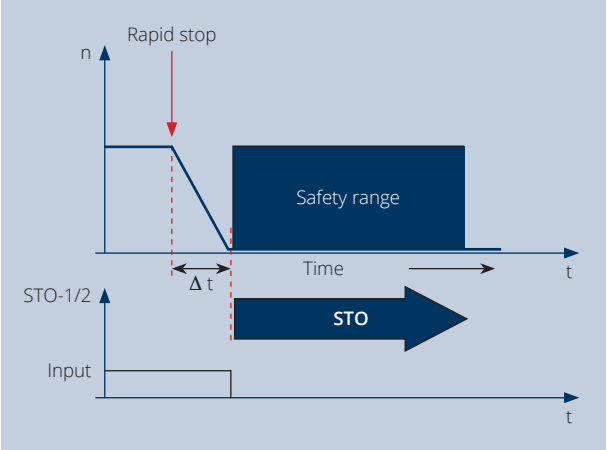

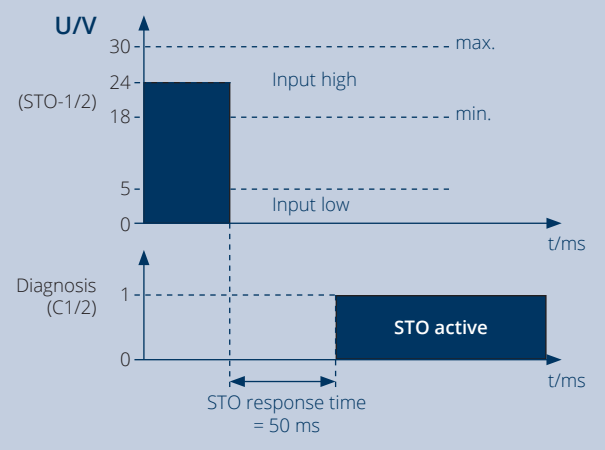

* *The STO response time is the time between deactivation of the STO input signal and the definite fail-safe pulse block.*

BRAKE RECTIFIER MODULE | DGM

The rectifier module - available as accessory - is used to control a brake in direct current.
The rectified module is powered with alternating voltage, and it controls the brake with direct voltage, whose value depends on the module supply voltage.

Supply voltage [Un]	Internal circuit	Brake voltage
230 Vac	Half-wave rectifier (Un x0.445)	102 Vdc
400 Vac	Half-wave rectifier (Un x0.445)	180 Vdc

(Table 1)

In order to protect the brake coil against any current peaks, a varistor - to be connected in parallel to the control clamps - is supplied with the rectifier module.

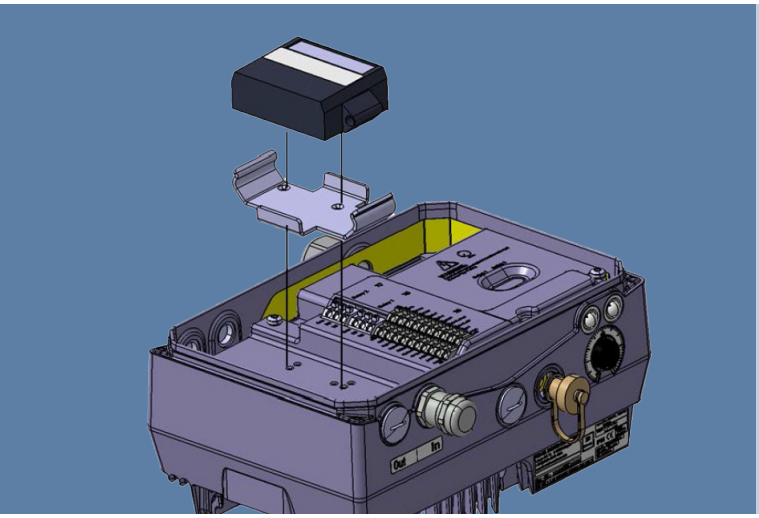

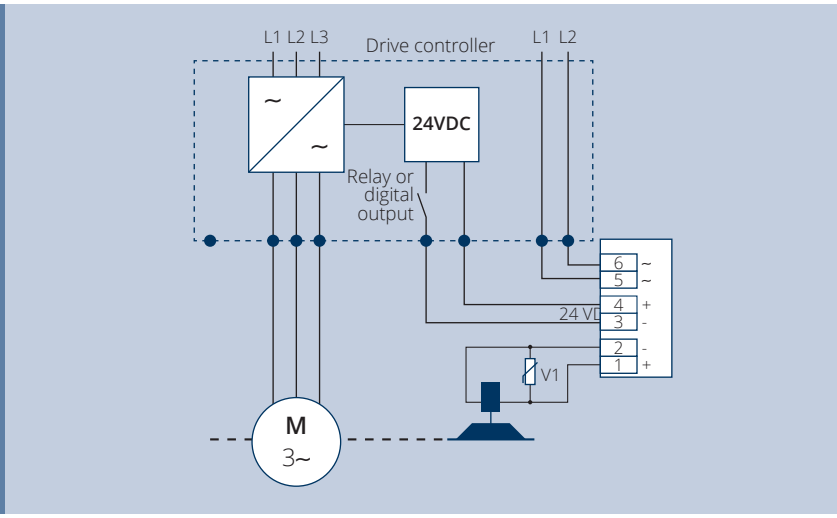

DGM1 and DGM3 can be equipped with a brake rectifier accessory as an option.

Whenever the DGM manages a brake-motor*, the brake rectifier option must be selected and installed on board. This because the standard rectifier present on Bonfiglioli self-braking motors cannot be managed directly by a PLC.

In this case, the brake-motor solution suggested by Bonfiglioli is the following:

FD + no rectifier + SD: the FD brake coil is powered through the DGM rectifier (Vdc).

The correct voltage value of the brake coil to be selected depends on the main power supply of the inverter (table 1).

** Only FD brakes can be selected (DC brake power supply). FA brakes can't be configured in combination with a DGM.*

BRAKE RECTIFIER MODULE | DGM MODULAR

The rectifier module - available as an option to choose during the configuration phase of the inverter (this means it cannot be added after ordering the inverter), is used to control a brake in direct current.
The rectified module is powered with alternating voltage, and it controls the brake with direct voltage, whose value depends on the module supply voltage.

Supply voltage [Un]	Internal circuit	Brake voltage
230 Vac	Half-wave rectifier (Un x0.445)	102 Vdc
400 Vac	Half-wave rectifier (Un x0.445)	180 Vdc

Table 2

CONNECTION OF MECHANICAL BRAKE TO BRAKE MODULE

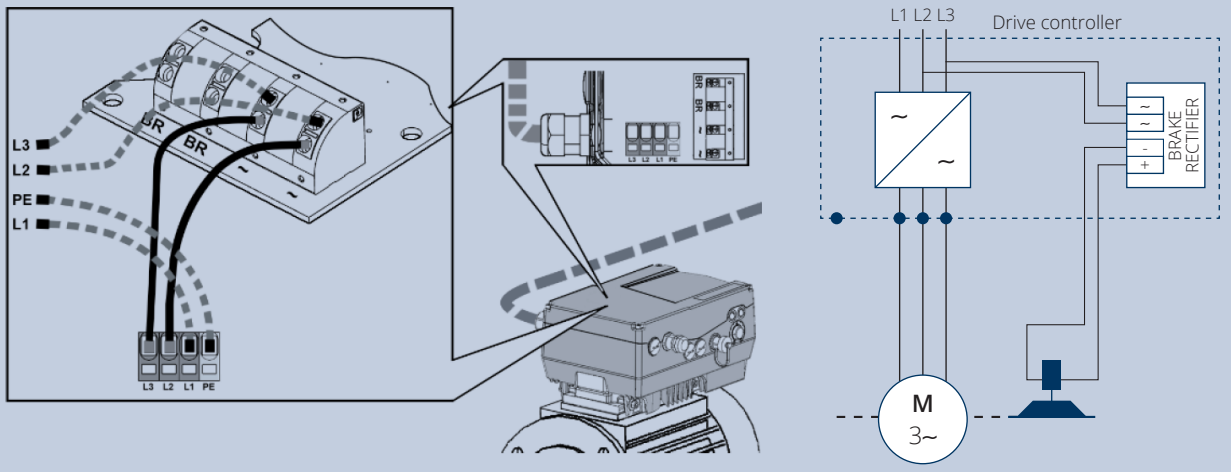

Whenever the DGM Modular manages a brake-motor*, the brake rectifier option must be selected and installed on board. This because the standard rectifier present on Bonfiglioli self-braking motors cannot be managed directly by a PLC.

In this case, the brake-motor solution suggested by Bonfiglioli is the following:

FD + no rectifier + SD: the FD brake coil is powered through the DGM Modular rectifier (Vdc).

The correct voltage value of the brake coil to be selected depends on the main power supply of the inverter (table 2).

BRAKE CHOPPER AND INTEGRATED BRAKE RESISTOR

When speed of an inverter-controlled electric motor is reduced, the motor acts as a generator, feeding back energy to the frequency inverter. The inverter link circuit voltage is increased, until it reaches a value beyond which excess power must be suitably discharged via external dissipative components. The DGM version with brake chopper can support therefore mentioned technique to connect a braking resistor for power thermal dissipation.
All sizes are available with the brake chopper option.
This version is equipped with two additional clamps (B+ and B-) that can be connected to the relevant braking resistor, whose size is based on the application dynamics.

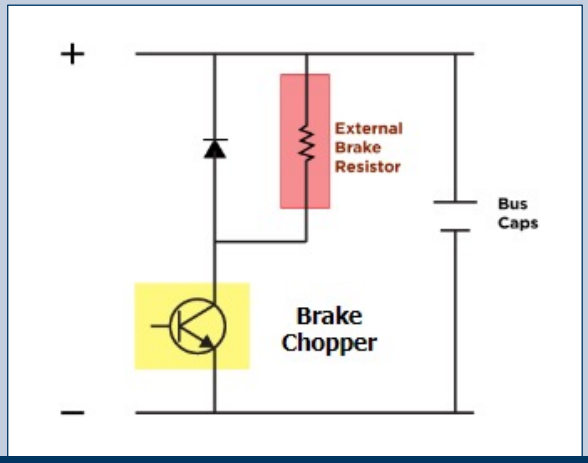

Available on all DGMs, brake chopper can be chosen as optional. It allows to connect a braking resistor to the inverter. In deceleration phase the motor operates as generator and supplies energy to the inverter. The braking resistor can absorb the exceeding energy avoiding inverter failure and permitting fastest brakes with high loads.



The braking resistor to be connected to the chopper is available as accessory.

Brake resistors

	Brake resistor	Power	ED
		[W]	[%]
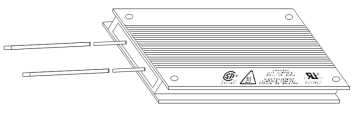	**Size A** 100 W, 100 Ω, IP65, connection cable 510 mm, 110x80x15 mm (LxWxH)	550	13.60
		750	10.00
		1100	6.80
		1500	5.00
	**Size B** 200 W, 50 Ω, IP65, connection cable 510 mm, 216x80x15 mm (LxWxH)	2200	9.00
		3000	6.66
		4000	5.00
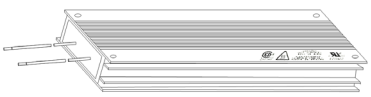	**Size C** 240 W or 400 W*, 72 Ω, IP65, connection cable 510 mm, 216x80x30 mm (LxWxH)	5500	4.3 / 7.3*
		7500	3.2 / 5.3*
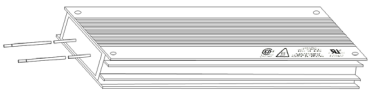	**Size D** 2x240 W o 2x400 W*, 2x72 Ω, IP65, connection cable 510 mm, 216x80x30 mm (LxWxH)	11000	4.4 / 7.2*
		15000	3.2 / 5.3*
		18500	2.6 / 4.3*
		22000	2.2 / 3.6*

Software and fieldbus

VPLUS DEC PROGRAMMING SOFTWARE

If mounted on the gearmotor, DGM is preconfigured in Bonfiglioli's factories; in particular, motor parameters are set-up and autotuning is performed.
Based on their needs, user can change the settings via the MMI keypad available as an accessory, or with the VPlus Dec programming software.
The VPlus Dec software is available free of charge and is compatible with the latest Windows versions (Windows XP and later).
To connect the PC to DGM, use the programming cable available as an accessory.
With the Vplus Dec programming software, users can easily perform all configuration, troubleshooting and testing operations.
The graphic interface is user-friendly and easy to manage.

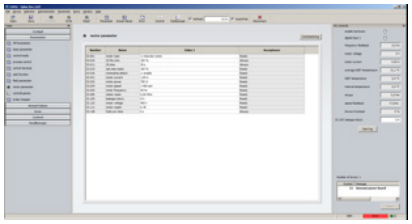

Parameters

- Changing the parameters value.
- Uploading and saving a parameter set from the inverter to the PC.
- Downloading parameters on the inverter.
- Assigning access levels.

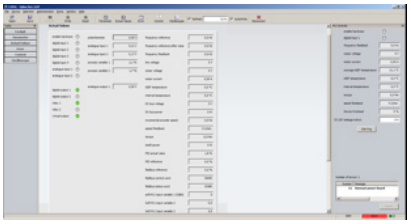

Actual values

Displays the inverter, digital inputs/outputs, analog input/outputs and potentiometer operating values and process variables in real time.

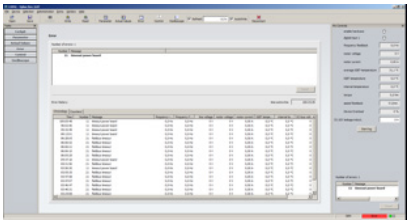

Errors

- Displays the actual error.
- Displays the buffer with the latests 20 alarms.
- Displays the alarm counters divided by type.

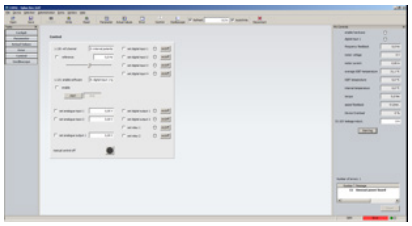

Control system

- From here, you can control the inverter directly.
- Digital inputs/outputs overwriting.
- Analog inputs/outputs overwriting.
- Motor control frequency overwriting.
- This mode can be used during commissioning or testing.

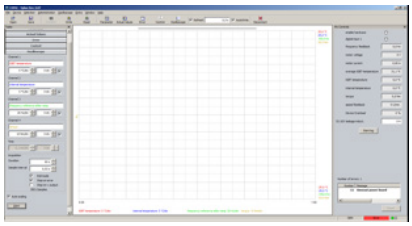

Oscilloscope

Possibility of managing up to 4 customizable channels.
The oscilloscope data can be loaded in.csv and.txt format.

SOFT PLC

All DGM are equipped with an embedded PLC, whose functions can be used via the Soft PLC program (IEC 61131-3).
The soft PLC function helps you to manage the inverter and its application in stand alone mode. This is possible by editing the functional program, integrating also third party components such as selectors or push-buttons.
In order to use this function properly it is necessary to have another program in addition to the VPlus Dec one.
Programming can be performed in FBD (Function Block Diagram), ST (Structured Text), IL (Instruction List), LD (Ladder Diagram) and SFC (Sequential Function Chart) mode.
The software is available free of charge.

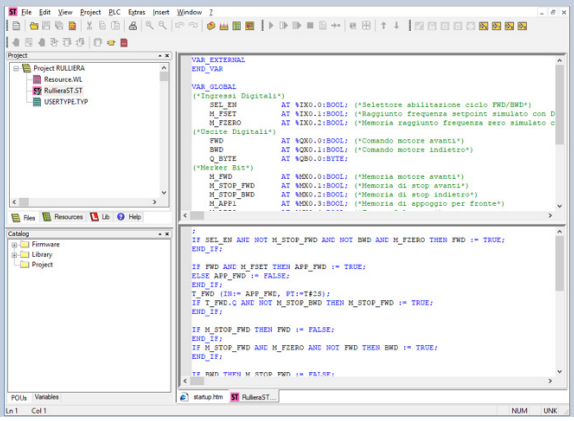

FIELDBUS OVERVIEW

The choice of the preferred field bus usually depends on the controller manufacturer used in the system, the geographic region, the functional requirements in terms of speed and network spread and availability of suitable field devices. The DGM product families offers many communication options, allowing it to be easily integrated in existing automation processes without having to depart from the fieldbus systems used previously in the application. The fieldbus systems can be selected as options.
To interface with control and monitoring devices several fieldbus are available. CANopen* protocol is standard on DGM Modular, while Modbus RTU protocol is standard on both DGM and DGM Modular. As option, in addition to the standard ones, it's possible to choose between the available fieldbus interfaces or protocols below:

DGM

Modbus -RTU
CANopen
PROFINET
PROFIBUS
EtherCAT
sercos the automation bus

DGM Modular

Modbus -RTU
CANopen
PROFINET
EtherCAT
sercos the automation bus
EtherNet/IP

We provide manuals with process data and SW details for each field-buses.

** Available with additional M12 connector*

Accessories

MMI (MAN MACHINE INTERFACE) HANDHELD CONTROLLER

For commissioning, parameter adaptations and service purposes, our flexible MMI handheld controller is available as an alternative to the VPlus Dec PL software. With this control device, users can can commission, change/save, display the decentralized inverter parameters and perform troubleshooting operations.

On the MMI, you can save up to 8 complete data sets, control the inverter manually or check the actual and saved alarms.

The hand-held MMI control device is connected to the inverter integrated interface and no external signals or power supply are required.

The keypad is supplied with a 3-meter spiral cable, RJ9 connector and M12 connector



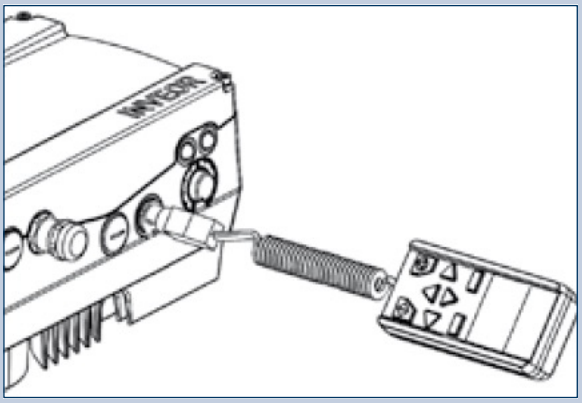

PROGRAMMING CABLE

To connect it with the VPlus Dec programming software, use the special communication cable available as accessory.
2 meter communication cable with USB connector on one side and M12 connector on the other, with integrated RS485 converter.

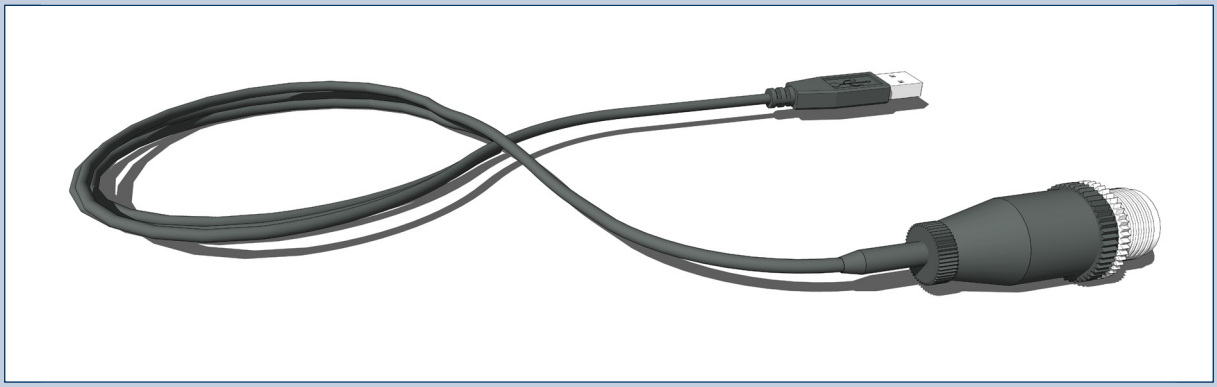

ACCESSORIES OVERVIEW



Mounting kits – DGM Modular			
	Inverter Size	Motor Series – Size	Material ID
Wall Mounting	A	-	YP00020422
	B	-	710555487
	C	-	710555488
	D	-	710555489

Mounting kits – DGM			
	Inverter Size	Motor Series – Size	Material ID
Wall Mounting	A	-	710555486
	B	-	710555487
	C	-	710555488
	D	-	710555489

ACCESSORIES OVERVIEW

Brake resistor			
Inverter Size	Description	Material ID	
A	Brake resistor: 100W 100ohm IP65 Connection cable: 510mm L=110 mm W=80 mm H=15 mm	YP00007202	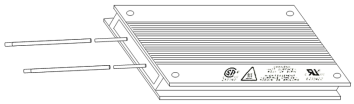
B	Brake resistor: 200W 50ohm IP65 Connection cable: 510mm L=216 mm W=80 mm H=15 mm	YP00010118	
C	Brake resistor: 240W 72ohm IP65 Connection cable: 510mm L=216 mm W=80 mm H=30 mm	YP00016991	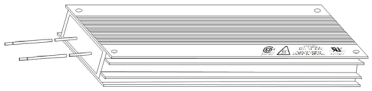
D	Brake resistor: 2x240W 72ohm IP65 Connection cable: 510mm L=216 mm W=80 mm H=30 mm	Ask technical service	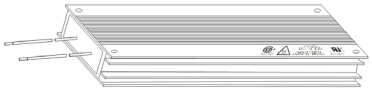

Cables			
Inverter Size	Description	Material ID	
All	M12 >> JST 4 poles to have I/O on board (2 cables needed for I/O setup)	YP00020445	
All	M12 >> JST 3 poles for analogic input on board only 0-10V or CANopen	YP00021591	
All	Potentiometer >> JST 3 Poles (in case the DGM doesn't have the pot. natively)	YP00022767	
All	Programming and diagnosis cable 2m	710555480	
All	M12 8 Pin A-code male wiring connector	YP00002270	

MMI controller			
Inverter Size	Description	Material ID	
All	MMI handheld controller 3m	710555479	

Technical details

TECHNICAL DETAILS | DGM1 - MONO-PHASE

			DGM1 (230 Vac)			
Electric data	Size		A			
	Electric systems		TN/TT			
	Input current	[A]	4.5	5.6	6.9	9.2
	Nominal output current, act. (a 8kHz)	[A]	2.3	3.2	3.9	5.2
	Min. brake chopper	[Ω]	50			
	60 sec. overload	[%]	150			
	Switching frequency	[kHz]	4, 8 (default), 16			
	Output frequency	[Hz]	0 ÷ 400			
	Network start / reconnecting cycles		Every 2 min			
	Braking module		Un 230Vac / Ufreno 102Vdc Un 400Vac / Ufreno 180Vdc			
	Contact current DIN EN 61800-5		< 10 mA			
Functions	Protection functions		Overvoltage and undervoltage, I^2t limitation, shortcircuit, ground fault, motor and inverter temperature, tilting prevention, block detection, dry PID cycle protection			
	Software functions		Process control (PID), fixed frequencies, dataset switching, quick restart, motor current limitation			
	Soft PLC		IEC61131-3, FBD, ST, AWL			
	Safe Torque Off (STO) function		Not available			
Mechanical data	Housing		Die-cast aluminum housing			
	Size (L x W x H)	[mm]	233x153x120			
	Weight, inc. adapter plate	[kg]	3.9			
	Degree of protection		IP65			
	Cooling		Passive			
Environmental conditions	Room temperature		-10°C (without condensation)...+40°C (+50°C with derating)			
	Storage temperature		-25 °C... +85 °C			
	Installation altitude		up to 1000m s.l.m. / higher than 1000m with reduced power (1% every 100m) / higher than 2000m see the Instruction Manual			
	Air relative humidity		≤ 96% no condensation allowed			
	Vibration resistance (DIN EN 60068-2-6)		$50m/s^2$; 5... 200 Hz			
	Impact resistance (DIN EN 60068-2-27)		$300m/s^2$			
	EMC (DIN EN 61800-3)		C1			
Interfaces	I/O interfaces		4 DI/2 DO/2 AI/1 AO/2 RELAY/1 IN PTC			
	Internal power supply		24Vdc, 100mA / 10Vdc, 30mA / shortcircuit protection			
	External power supply 24 Vdc		24 Vdc ± 15%			
	Embedded fieldbus		Modbus RTU			
	Optional fieldbus		CANopen, ProfiBUS, ProfiNET, EtherCAT, Sercos III			
	Status LED		2 LEDs (1 red, 1 green)			
	Certificates of conformity		ROHS, CE, UL, CSA			

TECHNICAL DETAILS | DGM3 - THREE-PHASE

			DGM3 (400 Vac)												
Electric data	Size		A				B			C		D			
	Connected motor power	[kW]	0.55	0.75	1.1	1.5	2.2	3.0	4.0	5.5	7.5	11.0	15.0	18.5	22.0
	Network voltage		3 x 200 Vac -10%... 480 Vac +10% 280 Vdc -10%... 680 Vdc +10%												
	Network frequency		50/60 Hz ± 6%												
	Electric systems		TN/TT												
	Input current	[A]	1.4	1.9	2.6	3.3	4.6	6.2	7.9	10.8	14.8	23.2	28.2	33.2	39.8
	Nominal output current, act. (a 8kHz)	[A]	1.7	2.3	3.1	4.0	5.6	7.5	9.5	13.0	17.8	28.0	34.0	40.0	48.0
	Min. brake chopper	[Ω]	100				50			50		30			
	60 sec. overload	[%]	150												130
	Switching frequency	[kHz]	4, 8 (default), 16												
	Output frequency	[Hz]	0 ÷ 400												
	Network start / reconnecting cycles		Every 2 min												
	Braking module		Un 230Vac / Ufreno 102Vdc Un 400Vac / Ufreno 180Vdc												
	Contact current DIN EN 61800-5		< 3.5 mA												
Functions	Protection functions		Overvoltage and undervoltage, I^2t limitation, shortcircuit, ground fault, motor and inverter temperature, tilting prevention, block detection, dry PID cycle protection												
	Software functions		Process control (PID), fixed frequencies, dataset switching, quick restart, motor current limitation												
	Soft PLC		IEC61131-3, FBD, ST, AWL												
	Safe Torque Off (STO) function		2 x STO inputs (option)												
Mechanical data	Housing		Die-cast aluminum housing												
	Size (L x W x H)	[mm]	233x153x120				270x189x140			307x223x181		414x294x232			
	Weight, inc. adapter plate	[kg]	3.9				5.0			8.7		21.0			
	Degree of protection		IP65									IP65 (IP55 Cooling fans)			
	Cooling		Passive									Active (2 fans)			
Environmental conditions	Room temperature		-25°C (without condensation)...+50°C (without derating)												
	Storage temperature		-25 °C... +85 °C												
	Installation altitude		up to 1000m s.l.m. / higher than 1000m with reduced power (1% every 100m) / higher than 2000m see the Instruction Manual												
	Air relative humidity		≤ 96% no condensation allowed												
	Vibration resistance (DIN EN 60068-2-6)		50m/s²; 5... 200 Hz												
	Impact resistance (DIN EN 60068-2-27)		300m/s²												
	EMC (DIN EN 61800-3)		C2												
Interfaces	I/O interfaces		4 DI/2 DO/2 AI/1 AO/2 RELAYS (The STO version includes 2 STO channels and no relays)/1 IN PTC												
	Internal power supply		24Vdc, 100mA / 10Vdc, 30mA / shortcircuit protection												
	External power supply 24 Vdc		24 Vdc ± 15%												
	Embedded fieldbus		Modbus RTU												
	Optional fieldbus		CANopen, ProfiBUS, ProfiNET, EtherCAT, Sercos III												
	Status LED		2 LEDs (1 red, 1 green)												
	Certificates of conformity		ROHS, CE, UL, CSA												

TECHNICAL DETAILS | DGM-MPM - THREE-PHASE

Electric data	Size		A					B				
	Connected motor power	[kW]	0.55	0.75	1.1	1.5	2.2 LD[5]	2.2	3.0	4.0	5.5 LD[5]	
	Network voltage		3 x 200 Vac -10%... 480 Vac +10% 280 Vdc -10%... 680 Vdc +10%									
	Network frequency		50/60 Hz ± 6%									
	Electric systems		TN/TT									
	Input current	[A]	1.4	1.9	2.6	3.3	3.9	4.6	6.2	7.9	9.3	
	Nominal output current, act. (a 8kHz)	[A]	1.7	2.3	3.1	4.0	4.8	5.6	7.5	9.5	11.0	
	Min. brake chopper	[Ω]	100					50				
	60 sec. overload	[%]	150				110	150			110	
	3 sec. overload	[%]	200				150	200			150	
	Switching frequency	[kHz]	Auto regardless of temperature, 2 kHz, 4 kHz, 6 kHz, 8 kHz, 12 kHz, 16 kHz (factory setting 4 kHz)									
	Output frequency	[Hz]	0 ÷ 599									
	Nominal output apparent power	[kVA]	1.06	1.43	1.93	2.49	2.99	3.49	4.68	5.92	6.86	
	Mains cycles of operation / restart		Unlimited[3]									
	Contact current DIN EN 61800-5		< 3.5 mA[4]									
Functions	Protection functions		Overvoltage and undervoltage, I^2t limitation, short-circuit, ground leak, motor and variable frequency drive temperature, stall prevention, blocking detection									
	Software functions		Torque control[6], multiple pumps, fixed frequencies, data record changeover, flying restart, motor current limit									
Mechanical data	Housing		Two-part aluminium die-cast casing									
	Size (L x W x H)	[mm]	233x153x120					270x189x140				
	Weight, inc. adapter plate	[kg]	3.9					5.0				
	Degree of protection		IP65									
	Cooling		Passive									
Environmental conditions	Climate class (DIN EN 60721-3-3)		3K3 (50°C)				3K3 (40°C)	3K3 (50°C)			3K3 (40°C)	
	Ambient temperature		-40 °C (non condensing) to +50 °C (without derating)				up to +40°C	-40 °C (non condensing) to +50 °C (without derating)			up to +40°C	
	Storage temperature		-40 °C ... +85 °C									
	Installation altitude		up to 1000 m above sea level / over 1000 m with reduced performance (1 % per 100 m) / above 2000 m see operating manual									
	Air relative humidity		≤ 96 %, condensation not permitted.									
	Vibration class (DIN EN 60721-3-3)		3M7 (3g)									
	EMC (DIN-EN-61800-3)		C2									
	Energy efficiency class (EN 61800-9-2)		IE2									
	Certificates of conformity		ROHS, CE, UL									

Technical data for DGM-MPM (subject to technical changes)
1) Recommended motor rating (4-pole asynchr. motor) is given based on the 400 V AC supply voltage.
2) In compliance with the overvoltage category.
3) < 3 s may result in power failure/intermediate circuit undervoltage faults.
4) With 1LA7 asynchronous motor, motor-mounted.
5) Low-duty devices with reduced overload.
6) Only for synchronous and reluctance motors.

DGM-MPM (400 Vac)								
	C			D				
	5.5	7.5	11.0 LD[5]	11.0	15.0	18.5	22.0	30.0 LD[5]
3 x 200 Vac -10%... 480 Vac +10% 280 Vdc -10%... 680 Vdc +10%								
50/60 Hz ± 6%								
TN/TT								
	10.8	13.8	18.3	23.2	28.2	33.2	38.2	49.8
	13.0	16.5	22.0	28.0	34.0	40.0	46.0	60.0
	50			30				
	150		110	150				110
	200		150	200				150
Auto regardless of temperature, 2 kHz, 4 kHz, 6 kHz, 8 kHz, 12 kHz, 16 kHz (factory setting 4 kHz)								
0 ÷ 599								
	8.11	10.29	13.72	17.46	21.2	24.94	28.6	37.41
	Unlimited[3]			> 2 min.				
< 3.5 mA[4]								
Overvoltage and undervoltage, I^2t limitation, short-circuit, ground leak, motor and variable frequency drive temperature, stall prevention, blocking detection								
Torque control[6], multiple pumps, fixed frequencies, data record changeover, flying restart, motor current limit								
Two-part aluminium die-cast casing								
	307x223x181			414x294x232				
	8.7			21.0				
	IP65			IP55				
				Active (2 fans)				
	3K3 (50°C)		3K3 (40°C)	3K3 (50°C)				3K3 (40°C)
	-40 °C (non condensing) to +50 °C (without derating)		up to +40°C	-40 °C (non condensing) to +50 °C (without derating)				up to +40°C
-40 °C ... +85 °C								
up to 1000 m above sea level / over 1000 m with reduced performance (1 % per 100 m) / above 2000 m see operating manual								
≤ 96 %, condensation not permitted.								
3M7 (3g)								
C2								
IE2								
ROHS, CE, UL								

Configuration Guidelines

ENVIRONMENTAL CONDITIONS

Storage

See the Product Storage Guidelines on the EVOX user manual at www.bonfiglioli.com for a thorough description of every environment and treatment conditions (for less and more than 6 storage months).

Observe the following instructions to correctly store the products:

a) Do not store outdoors, in areas exposed to the weather or with excessive humidity.
b) Always place boards, wood or other materials between the products and the floor. The gearboxes should not have direct contact with the floor.
c) In case of long-term storage, all machined surfaces such as flanges, shafts and couplings must be coated with a suitable rust inhibiting product (Mobilarma 248 or equivalent).

In addition, the gear units must be placed with the fill plug in the highest position and filled up with oil.
Before putting the units into operation, top-up with the appropriate quantity and type of oil (refer to the User's manual available at www.bonfiglioli.com).

STANDARDS AND REGULATIONS

EN 61800-5-1 (2007)	Adjustable speed electrical power drive systems - Part 5-1: Safety requirements - Electrical, thermal and energy
EN 61800-3 (2004/A1:2012)	Adjustable speed electrical power drive systems. EMC requirements and specific test methods
EN 50581 (2012)	Technical documentation for the assessment of electrical and electronic products with respect to the restriction of hazardous substances
EN 61800-5-2 (2007)	Adjustable speed electrical power drive systems - Part 5-2: Safety
EN 62061 (2005/A1:2013/AC:2010)	Safety of machinery - Functional safety of safety-related electrical, electronic and programmable electronic control systems
EN ISO 13849-1 (2008/AC:2009)	Safety of machinery - Safety-related parts of control systems - Part 1: General principles for design (ISO 13849-1:2006)
IEC 61508-1(2010-04)	Functional safety of electrical/electronic/programmable electronic safety-related systems - Part 1: General requirements
IEC 61508-2 (2010-04)	Functional safety of electrical/electronic/programmable electronic safety-related systems - Part 2: Requirements for electrical/electronic/ programmable electronic safety-related systems

VARIABLE FREQUENCY DRIVE LOSSES IN ACCORDANCE WITH EN 61800-9-2 | DGM

	Supply voltage	Nominal current	Measurement (90; 100)	Measurement (50; 100)	Measurement (10; 100)	Measurement (90; 50)	Measurement (50; 50)	Measurement (10; 50)	Measurement (50; 25)	Measurement (10; 25)	Standby losses	IE class
			Absolute power loss [W] [1, 2]									
			Relative losses [%] [1, 2, 3]									
	[V]	[A]									[W]	
Size A 0.55 kW	400	1.7	20	19	21	19	17	18	16	18	5	IE2
			1.9	1.8	2.0	1.8	1.6	1.7	1.5	1.7		
Size A 0.75 kW	400	2.3	26	25	26	19	19	21	19	20	5	IE2
			1.8	1.8	1.8	1.3	1.3	1.4	1.3	1.4		
Size A 1.1 kW	400	3.1	33	33	32	24	26	25	19	21	5	IE2
			1.7	1.7	1.6	1.6	1.4	1.3	1.0	1.1		
Size A 1.5 kW	400	4.0	45	38	41	29	31	30	32	26	5	IE2
			1.8	1.5	1.6	1.2	1.2	1.2	1.3	1.0		
Size B 2.2 kW	400	5.6	58	55	56	42	40	42	32	37	5	IE2
			1.7	1.6	1.6	1.2	1.1	1.2	0.9	1.0		
Size B 3.0 kW	400	7.5	81	87	71	54	53	52	43	46	5	IE2
			1.7	1.9	1.5	1.2	1.1	1.1	0.9	1.0		
Size B 4.0 kW	400	9.5	103	96	94	67	62	64	53	53	5	IE2
			1.7	1.6	1.6	1.1	1.0	1.1	0.9	0.9		
Size C 5.5 kW	400	13.0	153	125	123	77	73	73	53	53	5	IE2
			1.9	1.5	1.5	0.9	0.9	0.9	0.7	0.7		
Size C 7.5 kW	400	17.8	233	187	171	104	95	95	74	81	5	IE2
			2.1	1.7	1.5	0.9	0.9	0.9	0.7	0.7		
Size D 11.0 kW	400	28.0	268	234	242	152	140	150	107	116	18	IE2
			1.5	1.3	1.4	0.9	0.8	0.9	0.6	0.9		
Size D 15.0 kW	400	34.0	339	293	297	185	165	174	123	133	13	IE2
			1.6	1.4	1.4	0.9	0.8	0.8	0.6	0.6		
Size D 18.5 kW	400	40.0	407	347	347	212	189	200	135	147	13	IE2
			1.6	1.4	1.4	0.9	0.8	0.8	0.5	0.6		
Size D 22.0 kW	400	48.0	526	448	448	262	237	248	172	183	13	IE2
			1.8	1.5	1.5	0.9	0.8	0.8	0.6	0.6		

1) Loss values at 4 kHz switching frequency
2) Loss values include 10% surcharge according to the guideline
3) Relative losses based on the nominal apparent output power of the device
Measurement: relative frequency in %; relative current in %

SIL3 PLe FUNCTIONAL SAFETY

ECODESIGN EN 61800-9-2 IE2 ENERGY-EFFICIENT VARIABLE FREQUENCY DRIVES

VARIABLE FREQUENCY DRIVE LOSSES IN ACCORDANCE WITH EN 61800-9-2 | DGM-MPM

	Supply voltage	Nominal current	Measurement (90; 100)	Measurement (50; 100)	Measurement (10; 100)	Measurement (90; 50)	Measurement (50; 50)	Measurement (10; 50)	Measurement (50; 25)	Measurement (10; 25)	Standby losses	IE class
			Absolute power loss [W] [1, 2]									
			Relative losses [%] [1, 2, 3]									
	[V]	[A]									[W]	
Size A 0.55 kW	400	1.7	24	24	27	22	20	25	24	25	5	IE2
			2.3	2.2	2.5	2.0	1.9	2.4	2.2	2.3		
Size A 0.75 kW	400	2.3	29	28	32	23	21	28	25	27	5	IE2
			2.0	1.9	2.2	1.6	1.5	2.0	1.7	1.9		
Size A 1.1 kW	400	3.1	35	30	38	27	26	31	26	28	5	IE2
			1.8	1.6	2.0	1.4	1.3	1.6	1.4	1.4		
Size A 1.5 kW	400	4.0	45	39	46	31	27	36	25	31	5	IE2
			1.8	1.6	1.8	1.3	1.1	1.4	1.0	1.2		
Size A 2.2 kW LD	400	4.8	56	51	54	39	36	40	35	33	5	IE2
			1.9	1.7	1.8	1.3	1.2	1.3	1.2	1.1		
Size B 2.2 kW	400	5.6	61	60	65	46	38	48	37	42	7	IE2
			1.7	1.7	1.9	1.3	1.1	1.4	1.0	1.0		
Size B 3.0 kW	400	7.5	83	62	80	54	38	58	28	51	7	IE2
			1.8	1.3	1.7	1.2	0.8	1.3	0.6	1.1		
Size B 4.0 kW	400	9.5	107	80	98	66	51	70	31	58	7	IE2
			1.8	1.4	1.7	1.1	0.9	1.2	0.5	1.0		
Size B 5.5 kW LD	400	11.0	137	117	122	71	67	70	50	56	7	IE2
			2.0	1.7	1.8	1.0	1.0	1.0	0.7	0.8		
Size C 5.5 kW	400	13.0	149	114	125	69	52	76	44	70	7	IE2
			1.8	1.4	1.5	0.9	0.6	0.9	0.5	0.9		
Size C 7.5 kW	400	16.5	203	157	166	98	75	95	58	78	7	IE2
			2.0	1.5	1.6	0.9	0.7	0.9	0.6	0.8		
Size C 11.0 kW LD	400	22.0	323	226	244	151	123	133	80	99	7	IE2
			2.4	1.6	1.8	1.1	0.9	1.0	0.6	0.7		
Size D 11.0 kW	400	28.0	249	222	245	148	133	140	101	109	18	IE2
			1.4	1.3	1.4	0.8	0.8	0.8	0.6	0.6		
Size D 15.0 kW	400	34.0	314	279	298	181	163	173	122	134	18	IE2
			1.5	1.3	1.4	0.9	0.8	0.8	0.6	0.6		
Size D 18.5 kW	400	40.0	381	333	347	211	189	202	140	152	18	IE2
			1.5	1.3	1.4	0.8	0.8	0.8	0.6	0.6		
Size D 22.0 kW	400	46.0	485	398	392	247	189	276	197	194	18	IE2
			1.7	1.4	1.4	0.9	0.7	1.0	0.7	0.7		
Size D 30.0 kW LD	400	60.0	710	579	581	360	284	317	125	243	18	IE2
			1.9	1.5	1.6	1.0	0.8	0.8	0.3	0.6		

1) Loss values at 4 kHz switching frequency
2) Loss values include 10% surcharge according to the guideline
3) Relative losses based on the nominal apparent output power of the device
Measurement: relative frequency in %; relative current in %

Motor-inverter combination rules

MOTOR-INVERTER PORTFOLIO

	IEC adapter	Compact adapter	Servo adapter
IE5			 BMD*
IE4	 BSR...E		
IE3	 BXN  BX  BSR...O	 MX  MXN	
IE2	 BE  BSR...O	 ME	
IE1	 BN	 M  MNN	

Asynchronous Technology

Reluctance Technology

Permanent Magnets

\+

Decentralized inverter

 DGM

 DGM Modular

* *BMD permanent magnet motors can be combined with the DGM Modular decentralized invertert too but the feasibility and the dimensioning must be checked case by case*

MOTOR-INVERTER COMBINATION RULES

During the product selection process it is important to know that some combination of motor options and the decentralized inverter are not always feasible.

Here below we have collected these information

DGM Compatibility with Motor Options

Brake with alternating current	FA	Not compatible
Motor with handwheel	F1	Not compatible
Motor with connectors	CON	Not compatible
Additional cables input	IC	Not compatible
Servofan with separate terminal box	U1	For some mounting arrangements and based on the FD brake presence, the servofan must be rotated by 90°. because the terminal box footprint would interfere with the inverter footprint
Servofan with terminal box in the motor box	U2	Not compatible
Brake release lever	R and RM	No AA position installation
Anti-condensation heaters	H1 and NH1	Not compatible with Size D
Brake microswitch	MSW	For Size D, the microswitch cable cannot be inserted in the motor box; the user must connect it in a suitable box

DGM1 | 1-PHASE COMPATIBILITY WITH BONFIGLIOLI ASYNCHRONOUS MOTORS

Compatibility table to install the decentralized inverter on the motor, based on the mounting arrangement.

	Series	BN	BE	BX	BXN	M	ME	MX	MNN	MXN
	Efficinecy	IE1	IE2	IE3	IE3	IE1	IE2	IE3	IE1	IE3
Power (kW)	DGM1 Size	IEC adapter				Compact adapter				
0.37	A	71B	71B	-	71MB	1SD	1SB	-	10MB	10MB
0.55	A	71C	-	-	-	1LA	-	-	10MC	-
		80A	80A	-	80MA	-	2SA	-	20MA	20MA
0.75	A	80B	80B	80B	80MB	2SA	2SB	2SB	20MB	20MB
		-	-	90SR	-	-	-	-	-	-
1.1	A	80C	-	-	-	2SB	-	-	-	-
		90S	90S	90S	90S	-	3SA	3SA	-	25S

DGM3 | 3-PHASE COMPATIBILITY WITH BONFIGLIOLI ASYNCHRONOUS MOTORS

Compatibility table to install the decentralized inverter on the motor, based on the mounting arrangement.

	Series	BN	BE	BX	BXN	M	ME	MX	MNN	MXN
	Efficinecy	IE1	IE2	IE3	IE3	IE1	IE2	IE3	IE1	IE3
Power (kW)	DGM3 Size	IEC adapter				Compact adapter				
0.55	A	71C	-	-	-	1LA	-	-	10MC	-
		80A	80A	-	80MA	-	2SA	-	20MA	20MA
0.75	A	80B	80B	80B	80MB	2SA	2SB	2SB	20MB	20MB
		-	-	90SR	-	-	-	-	-	-
1.1	A	80C	-	-	-	2SB	-	-	-	-
		90S	90S	90S	90S	-	3SA	3SA	-	25S
1.5	A	90LA	90LA	90LA	90L	3SA	3SB	3SB	-	25L
2.2	B	100LA	100LA	100LA	100LA	3LA	3LA	3LA	-	30LA
3.0	B	100LB	100LB	100LB	100LB	3LB	3LB	3LB	-	30LB
4.0	B	112M	112M	112M	112M	3LC	4SA	4SA	-	35M
5.5	C	132S	132S	132SB	132S	4SA	4SB	4SB	-	40S
7.5	C	132MA	132MA	132MA	132M	4LA	4LA	4LA	-	40M
9.2	D	132MB	132MB	-	-	4LB	4LB	-	-	-
		-	-	160MA	-	-	-	5SA	-	-
11	D	160MR	-	-	-	4LC	-	-	-	-
		160M	160M	160MB	-	-	5SA	5SB	-	-
15	D	160L	160L	160L	-	5SB	5LA	5LA	-	-
18.5	D	180M	180M	180M	-	5LA	-	-	-	-
22	D	180L	180L	180L	-	-	-	-	-	-

* *The adapter for motor size 132 in combination with DGM size D is not available at the moment. Please contact our technical office*

DGM-MPM | 3-PHASE COMPATIBILITY WITH BONFIGLIOLI ASYNCHRONOUS MOTORS

Compatibility table to install the decentralized inverter on the motor, based on the mounting arrangement.

	Series	BN	BE	BX	BXN	M	ME	MX	MNN	MXN
	Efficinecy	IE1	IE2	IE3	IE3	IE1	IE2	IE3	IE1	IE3
Power (kW)	DGM-MPM Size	IEC adapter				Compact adapter				
0.55	A	71C	-	-	-	1LA	-	-	10MC	-
		80A	80A	-	80MA	-	2SA	-	20MA	20MA
0.75	A	80B	80B	80B	80MB	2SA	2SB	2SB	20MB	20MB
		-	-	90SR	-	-	-	-	-	-
1.1	A	80C	-	-	-	2SB	-	-	-	-
		90S	90S	90S	90S	-	3SA	3SA	-	25S
1.5	A	90LA	90LA	90LA	90L	3SA	3SB	3SB	-	25L
2.2	A, B	100LA	100LA	100LA	100LA	3LA	3LA	3LA	-	30LA
3.0	B	100LB	100LB	100LB	100LB	3LB	3LB	3LB	-	30LB
4.0	B	-	-	-	-	3LC	-	-	-	-
		112M	112M	112M	112M	-	4SA	4SA	-	35M
5.5	B, C	132S	132S	132SB	132S	4SA	4SB	4SB	-	40S
7.5	C	132MA	132MA	132MA	132M	4LA	4LA	4LA	-	40M
9.2	C	132MB	132MB	-	-	4LB	4LB	-	-	-
		-	-	160MA	-	-	-	5SA	-	-
11	C, D	160MR	-	-	-	4LC	-	-	-	-
		160M	160M	160MB	-	-	5SA	5SB	-	-
15	D	160L	160L	160L	-	5SB	5LA	5LA	-	-
18.5	D	180M	180M	180M	-	5LA	-	-	-	-
22	D	180L	180L	180L	-	-	-	-	-	-
30	D	200L	-	200LA	-	-	-	-	-	-

* *The adapter for motor size 160 in combination with DGM size C, and the one for motor size 200 in combination with DGM size D are not available at the moment. Please contact our technical office*

DGM-MPM | 3-PHASE COMPATIBILITY WITH BONFIGLIOLI RELUCTANCE SYNCHRONOUS MOTORS

Compatibility table to install the decentralized inverter on the motor, based on the mounting arrangement.

	Series	BSR_O 1500rpm	BSR_O 3000rpm	BSR_E 1500rpm
	Efficinecy	IE2/IE3	IE3/IE4	IE4
Power (kW)	DGM-MPM Size	IEC adapter		
0.55	A	71B	-	71C
		-	-	80B
0.75	A	71C	-	-
		80A	-	80B
1.1	A	-	71B	-
		80B	-	-
		-	-	90S
1.5	A	-	71C	-
		80C	80A	-
		-	-	90L
2.2	A, B	-	80B	-
		90S	-	-
		-	-	100LA
3.0	B	-	80C	-
		90L	-	-
		-	-	100LB
4.0	B	-	90S	-
		100LB	-	-
		-	-	112M
5.5	B, C	-	90L	-
		112M	-	-
		-	-	132S
7.5	C	-	100LB	-
		132S	-	132MA
9.2	C	132MA	-	132MB
11	C, D	-	112M	-
		132MB	-	-
15	D	-	132S	-
18.5	D	-	132MA	-

** The adapter for motor size 132 in combination with DGM size D is not available at the moment. Please contact our technical office*

Dimension

INVERTER + OPTIONS DIMENSION

Size A,B,C

DGM

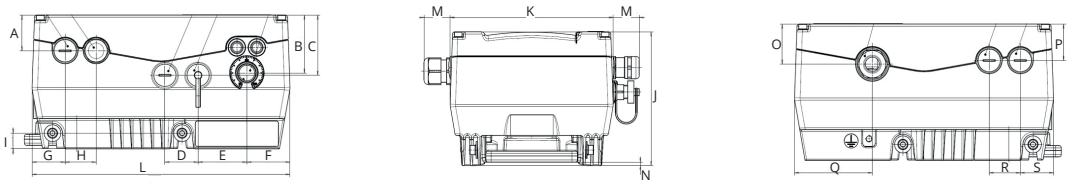

DGM-MPM

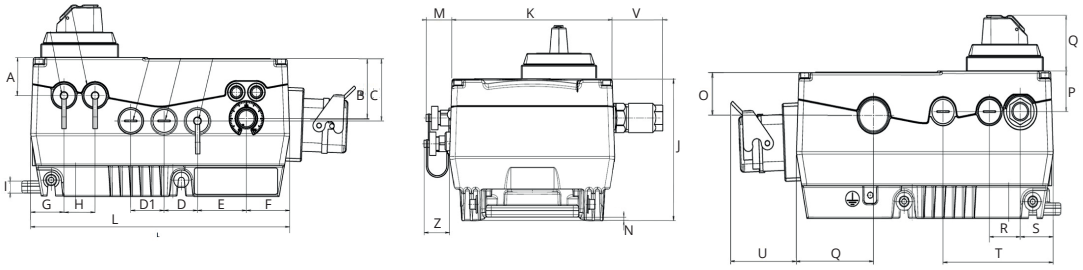

Size	A	B	C	D	D1	D2	E	F	G	H	H1	I	J	K	L	M	N	O	P	Q	R	S	T	U	V	Z
A	33	53	55	30	30	-	44	39	30	28	-	14	121	153	233	24.5	3	35.5	33	46	28	30	100	60	45	24
B	40	60	60	26	26	-	36	39	35	30	-	18.5	140	189	270	24.5	9	41	40	47	35	30	-	60	45	24
C	40	61	61	30	30	-	30	42.5	40	45	45	16.5	181.5	223	307	29	7	44	40	45.5	35	30	105	-	60.6	25.5

Size D

DGM

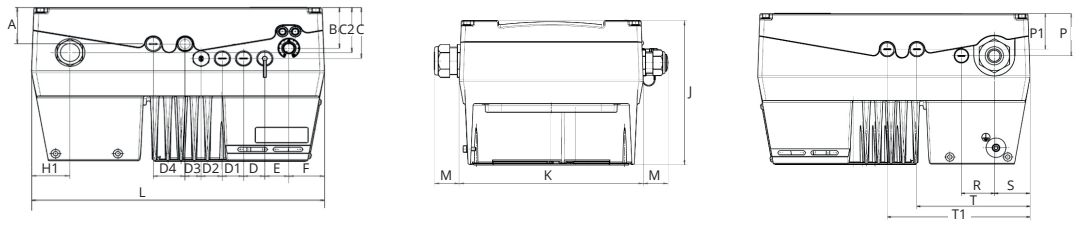

DGM-MPM

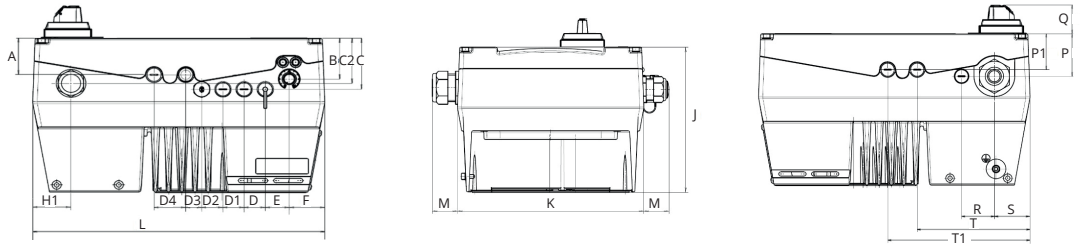

Size	A	B	C	C1	D	D1	D2	D3	D4	E	F	H1	J	K	L	M	P	P1	Q	R	S	T	T1
D	55	61.5	77	55	30	30	30	23	45	34	50.5	54.5	233.5	294	414	40	65.5	55.5	46	50	54.5	172	217

BX MOTORS WITH DGM AND DGM-MPM

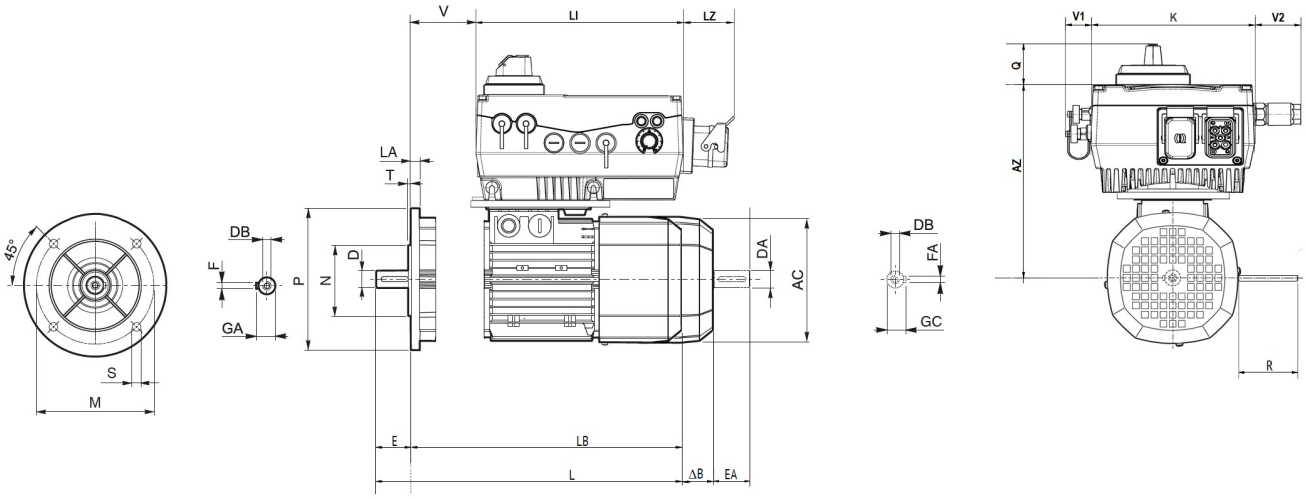

Motor		Output shaft				Motor overall dimensions								
Size	Power	D	E	GA	F	AC	L	LB	M	N	P	S	T	LA
80	0.75	19	40	21.5	6	156	320	280	165	130	200	11.5	3.5	11.5
90SR	0.75	19	40	21.5	6	176	316	276	165	130	200	11.5	3.5	11.5
90S	1.1	24	50	27	8	176	326	276	165	130	200	11.5	3.5	11.5
90LA	1.5	24	50	27	8	176	326	276	165	130	200	11.5	3.5	11.5
100	2.2-3	28	60	31	8	195	410	350	215	180	250	14	4	14
112	4	28	60	31	8	219	430	370	215	180	250	14	4	15
132SB	5.5	38	80	41	10	258	493	413	265	230	300	14	4	20
132MA	7.5	38	80	41	10	258	528	448	265	230	300	14	4	20
160MA	9.2	42	110	45	12	310	596	486	300	250	350	18.5	5	15
160	11-15	42	110	45	12	310	640	530	300	250	350	18.5	5	15
180	18.5-22	48	110	51.5	14	348	708	598	300	250	350	18.5	5	18
200	30	55	110	59	16	423	821	711	350	300	400	19	5	20

Motor		Brake		Double shaft			
Size	Power	ΔB	R FD	DA	EA	GV	FA
80	0.75	72	129	14	30	16	5
90SR	0.75	84	129	19	40	21.5	6
90S	1.1	84	129	19	40	21.5	6
90LA	1.5	84	160	19	40	21.5	6
100	2.2-3	92	160	24	50	27	8
112	4	97	199	24	50	27	8
132SB	5.5	110	204	28	60	31	8
132MA	7.5	99	204	28	60	31	8
160MA	9.2	140	266	38	80	41	10
160	11-15	140	266	38	80	41	10
180	18.5-22	158	305	42	110	45	12
200	30	161	323	45	110	48.5	14

Inverter size	Inverter overall dimensions					
	LI	LZ	Q	K	V1	V2
A	233	60	46	153	24.5	45
B	270	60	47	189	24.5	45
C	307	-	45.5	223	29	60.6
D	414	-	46	294	40	40

Inverter size	Legacy motor size	Inverter + Motor dimension		
		V with brake	V w/o brake	AZ
A	80	42	42	211
	90	57	57	220.5
	100	63	63	239.5
B	100	63	63	251.5
	112	64	64	271
	132	69	69	293
C	112	64	64	293
	132	69	69	338.5
	160	57	57	390.5
D	160	57	57	409.5
	180	58	58	447
	200	64	66	211

BE MOTORS WITH DGM AND DGM-MPM

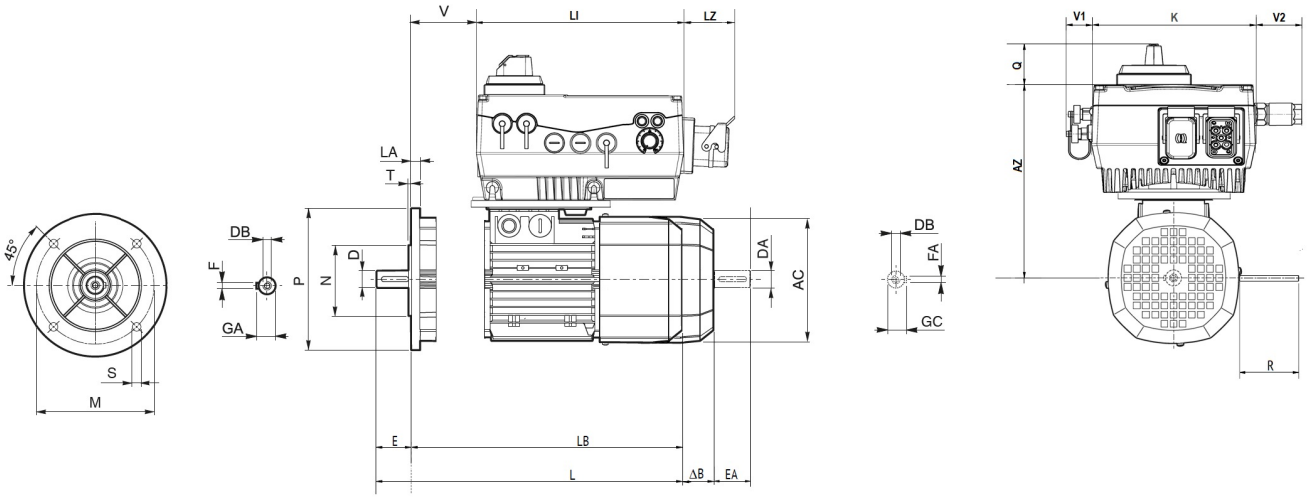

Motor		Output shaft				Motor overall dimensions								
Size	Power	D	E	GA	F	AC	L	LB	M	N	P	S	T	LA
71	0.37	14	30	16	5	138	249	219	130	110	160	9.5	3.5	10
80	0.55-0.75	19	40	21.5	6	156	274	234	165	130	200	11.5	3.5	11.5
90S	1.1	24	50	27	8	176	326	276	165	130	200	11.5	3.5	11.5
90LA	1.5	24	50	27	8	176	326	276	165	130	200	11.5	3.5	11.5
100	2.2-3	28	60	31	8	195	410	350	215	180	250	14	4	14
112	4	28	60	31	8	219	430	370	215	180	250	14	4	15
132SB	5.5	38	80	41	10	258	493	413	265	230	300	14	4	20
132MA	7.5	38	80	41	10	258	528	448	265	230	300	14	4	20
160MA	9.2	42	110	45	12	310	596	486	300	250	350	18.5	5	15
160	11-15	42	110	45	12	310	640	530	300	250	350	18.5	5	15
180	18.5-22	48	110	51.5	14	348	708	598	300	250	350	18.5	5	18
200	30	55	110	59	16	423	821	711	350	300	400	19	5	20

Motor		Brake		Double shaft			
Size	Power	ΔB	R FD	DA	EA	GC	FA
71	0.37	64	103	14	30	16	5
80	0.55-0.75	74	129	19	40	21.5	6
90S	1.1	85	129	24	50	27	8
90LA	1.5	85	160	24	50	27	8
100	2.2-3	91	160	28	60	31	8
112	4	99	199	28	60	31	8
132	5.5-7.5	110	204	38	80	41	10
132MB	9.2	100	226	38	80	41	10
160M	11	140	266	38	80	41	10
160L	15	140	266	38	80	41	10
180M	18.5	158	305	42	110	45	12
180L	22	158	305	42	110	45	12

Inverter size	Inverter overall dimensions					
	LI	LZ	Q	K	V1	V2
A	233	60	46	153	24.5	45
B	270	60	47	189	24.5	45
C	307	-	45.5	223	29	60.6
D	414	-	46	294	40	40

Inverter size	Legacy motor size	Inverter + Motor dimension		
		V with brake	V w/o brake	AZ
A	71	41	69	192
	80	42	86	227
	90	57	107	247
	100	63	131	266
B	100	63	131	239.5
	112	64	142	251.5
	132	69	69	271
C	112	64	142	293
	132	69	69	312.5
	160	57	57	338.5
D	160	57	57	390.5
	180	58	58	409.5

BN AND BSR MOTORS WITH DGM AND DGM-MPM

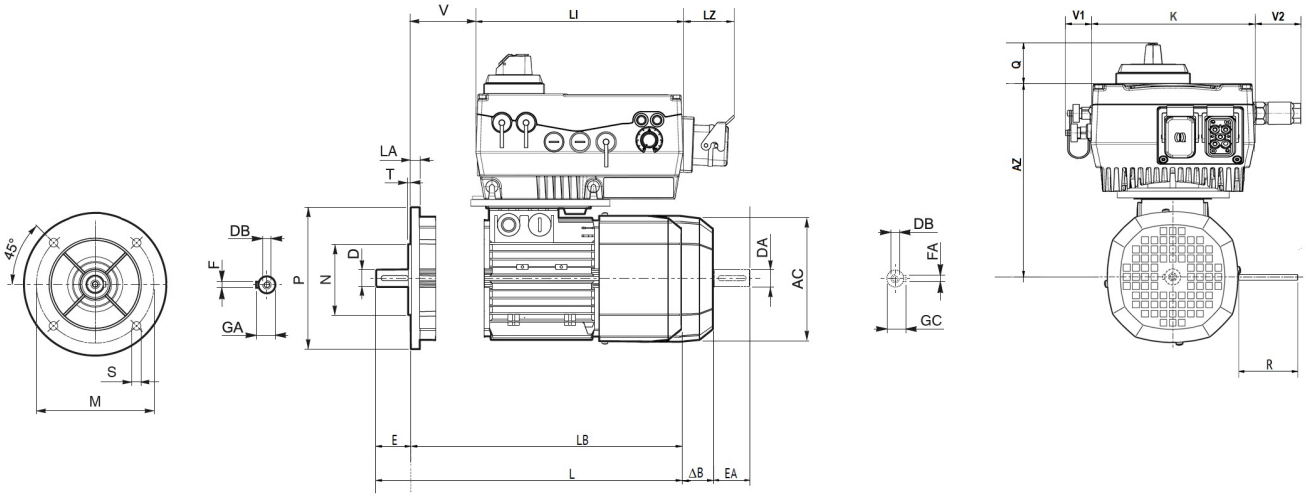

Motor		Output shaft				Motor overall dimensions								
Size	Power	D	E	GA	F	AC	L	LB	M	N	P	S	T	LA
71	0.37-0.55	14	30	16	5	138	249	219	130	110	160	9.5	3.5	10
80	0.55-0.75-1.1	19	40	21.5	6	156	274	234	165	130	200	11.5	3.5	11.5
90S	1.1	24	50	27	8	176	326	276	165	130	200	11.5	3.5	11.5
90LA	1.5	24	50	27	8	176	326	276	165	130	200	11.5	3.5	11.5
100	2.2-3	28	60	31	8	195	367	307	215	180	250	14	4	14
112	4	28	60	31	8	219	385	325	215	180	250	14	4	15
132	5.5-7.5	38	80	41	10	258	493	413	265	230	300	14	4	20
132MB	9.2	38	80	41	10	258	528	448	265	230	300	14	4	20
160MR	11	42	110	45	12	258	562	452	300	250	350	18.5	5	15
160M	11	42	110	45	12	310	596	486	300	250	350	18.5	5	15
160L	15	42	110	45	12	310	596	486	300	250	350	18.5	5	15
180M	18.5	48	110	51.5	14	310	640	530	300	250	350	18.5	5	15
180L	22	48	110	51.5	14	348	708	598	300	250	350	18.5	5	18
200	30	55	110	59	16	348	722	612	350	300	400	18.5	5	18

Motor		Brake		Double shaft			
Size	Power	ΔB	R FD	DA	EA	GV	FA
71	0.37-0.55	61	103	14	30	16	5
80	0.55-0.75-1.1	72	129	19	40	21.5	6
90S	1.1	83	129	24	50	27	8
90LA	1.5	83	160	24	50	27	8
100	2.2-3	91	160	28	60	31	8
112	4	99	199	28	60	31	8
132	5.5-7.5	110	204	38	80	41	10
132MB	9.2	75	226	38	80	41	10
160MR	11	110	266	38	80	41	10
160M	11	140	266	38	80	41	10
160L	15	140	266	38	80	41	10
180M	18.5	140	266	38	110	41	10
180L	22	158	305	42	110	45	12
200	30	156	305	42	110	45	12

Inverter size	Inverter overall dimensions					
	LI	LZ	Q	K	V1	V2
A	233	60	46	153	24.5	45
B	270	60	47	189	24.5	45
C	307	-	45.5	223	29	60.6
D	414	-	46	294	40	40

Inverter size	Legacy motor size	Inverter + Motor dimension		
		V with brake	V w/o brake	AZ
A	71	41	69	192
	80	42	86	201
	90	57	107	211
	100	63	131	220.5
B	100	63	131	239.5
	112	64	142	251.5
	132	69	69	271
C	112	64	142	293
	132	69	69	312.5
	160	57	57	338.5
D	160	57	57	390.5
	180	58	58	409.5
	200	64	66	409.5

M, ME, MX MOTORS WITH DGM AND DGM-MPM

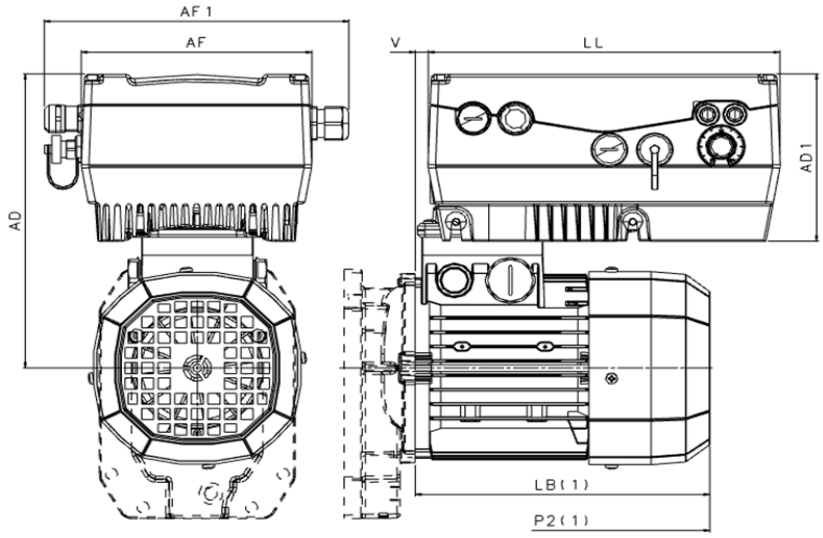

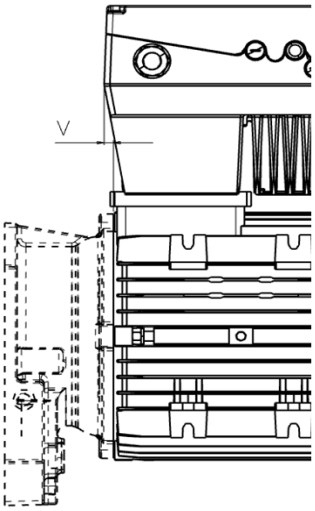

Motors: MX5

DGM inverter		Motor			Size					
Power (kW)	Size	M	ME	MX	AD	AD1	AF	AF1	LL	V
0.37	A	1SD	1SB	-	211	120	153	202	233	8.5
0.55		1LA	-	-	211					8.5
		-	2SA	-	211					8.5
0.75		2SA	2SB	2SB	222					8
1.1		2SB	-	-	222					8
		-	3SA	3SA	257					19
1.5		3SA	3SB	3SB	257					19
2.2	B	3LA	3LA	3LA	257	140	189	239	270	19
3		3LB	3LB	3LB	257					19
4		3LC	-	-	257					19
5.5	C	-	4SA	4SA	333	180	223	274	307	16.5
		4SA	4SB	4SB	333					16.5
7.5		4LA	4LA	4LA	333					16.5
9.2		4LA	4LA	-	333					16.5
11	D	4LC	-	-	406	232	294	369	414	
		-	5SA	5SB	406					10.5
15		5SB	5LA	5LA	406					10.5
18.5		5LA	-	-	406					10.5

(1) Length LB (motor), P2 (gearmotor) and all the other measurements not included are the same as the standard motors.

M-ME_FD MOTORS WITH DGM AND DGM-MPM

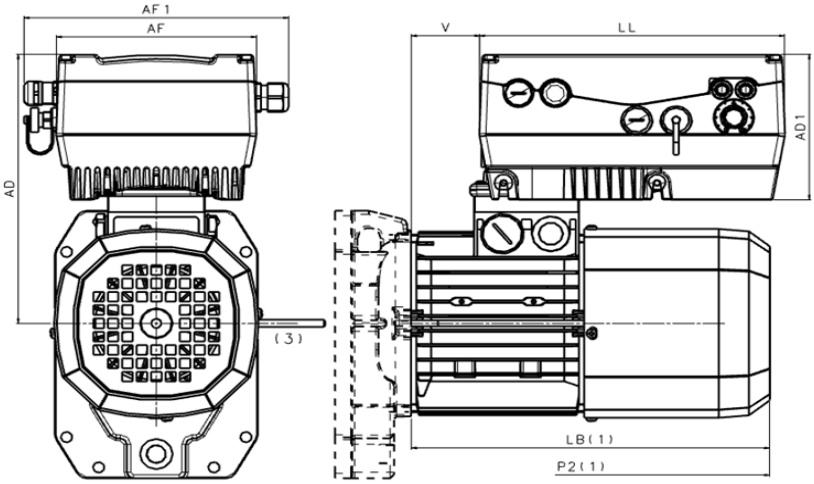

Motors: M1-ME1, M2-ME2,M3-ME3

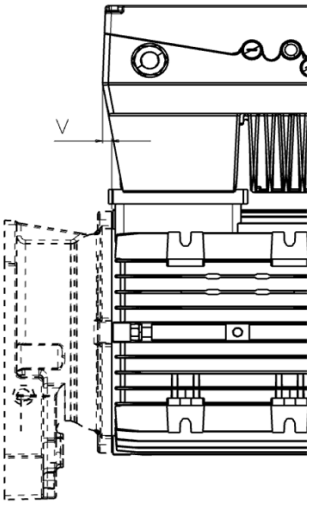

Motors: M4-ME4, M5-ME5

DGM inverter		Motor		Size					
Power (kW)	Size	M	ME	AD	AD1	AF	AF1	LL	V
0.37	A	1SD	1SB	211	120	153	202	233	36
0.55		1LA	-	211					36
		-	2SA	211					36
0.75		2SA	2SB	222					52
1.1		2SB	-	222					52
		-	3SA	222					52
1.5		3SA	3SB	257					67
2.2	B	3LA	-	257	140	189	239	270	67
3		3LB	-	257					67
4		3LC	-	257					67
		-	4SA	257					67
5.5	C	4SA	4SB	333	180	223	274	307	16.5
7.5		4LA	-	333					16.5
9.2		4LB	4LB	333					16.5
11	D	4LC	-	406	232	294	369	414	10.5
		-	5SA	406					10.5
15		5SB	5LA	406					10.5
18.5		5LA	-	406					10.5
22		?	-	406					10.5

(1) Length LB (motor), P2 (gearmotor) and all the other measurements not included are the same as the standard motors.

MX_FD MOTORS WITH DGM AND DGM-MPM

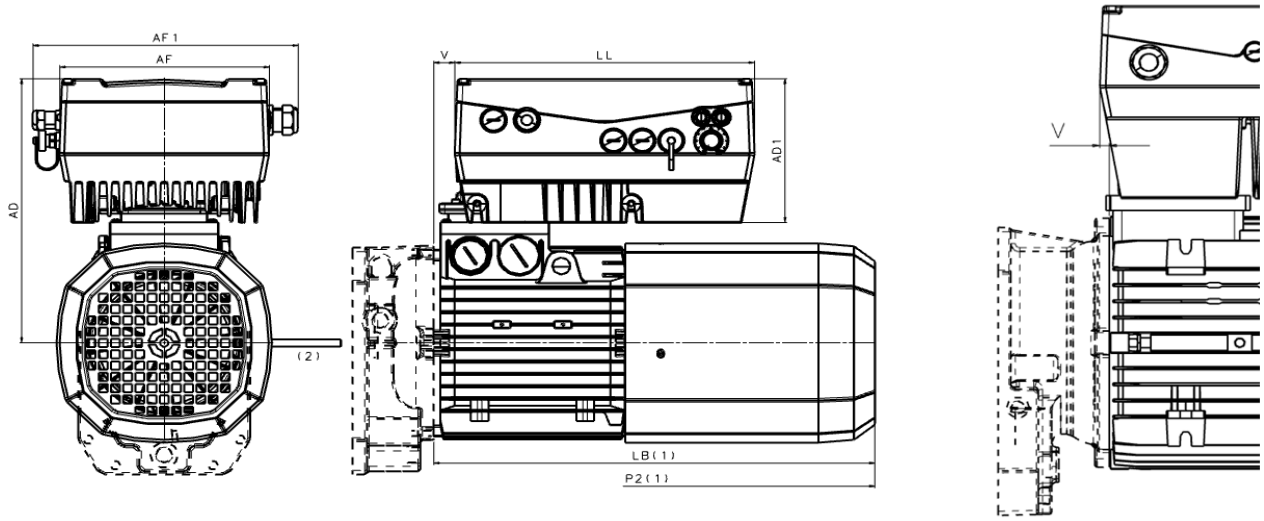

Motors: MX5

DGM inverter		Motor	Size					
Power (kW)	Size	MX	AD	AD1	AF	AF1	LL	V
0.75	A	2SB	222	120	153	202	233	8
1.1		3SA	257					19
1.5		3SB	257					19
2.2	B	3LA	257	140	189	239	270	19
3		3LB	257					19
4		3LC	257					19
5.5	C	4SB	333	180	223	274	307	16.5
7.5		4LA	333					16.5
9.2		5SA	333					16.5
11	D	5SB	406	232	294	369	414	10.5
15		5LA	406					10.5

(1) Length LB (motor), P2 (gearmotor) and all the other measurements not included are the same as the standard motors.

Order info

R&D Capacity







DESIGN SIMULATION

TESTING LABORATORIES

CO-ENGINEERING

The R&D department at Bonfiglioli develops cutting-edge solutions that integrate the most advanced mechanical, electrical, electronic and hydraulic technologies, responding to the most complex application challenges. **Each R&D center focuses on dedicated product lines, ensuring specialist know-how and tailor-made innovation.**

R&D CENTERS WORLDWIDE

ITALY
Bologna
Rovereto
Forlì

GERMANY
Hattingen
Krefeld

INDIA
Chennai

CHINA
Shanghai

Our worldwide presence

Thanks to an international network of closely interconnected commercial and production sites, we can guarantee the same high standards of Bonfiglioli quality anywhere at any given time. We know that our direct presence in local markets is the key to long-lasting success, so our family includes 18 production sites, 24 commercial sites and more than 550 distributors around the world.

Our organization is always close by, offering complete and efficient solutions and supporting our customers with dedicated services, co-engineering and after-sales assistance.

18 PRODUCTION SITES

24 COMMERCIAL SITES

80 COUNTRIES

550 DISTRIBUTORS

~5,000 PEOPLE

BR_CAT_DGM_STD_ENG_R02_1

Bonfiglioli global locations

AUSTRALIA
Bonfiglioli Transmission (Aust.) Pty Ltd
Plumpton NSW

BRAZIL
Bonfiglioli Redutores do Brasil Ltda
São Bernardo do Campo - São Paulo

CHINA
Bonfiglioli Drives (Shanghai) Co. Ltd.
Shanghai

Selcom Electronics (Shanghai) Co., Ltd
Shanghai

Shanghai

FRANCE
Bonfiglioli Transmission S.A.S.
Marly la Ville

GERMANY
Bonfiglioli Deutschland GmbH
Neuss

Bonfiglioli Deutschland GmbH
Krefeld

O&K Antriebstechnik GmbH
Hattingen

INDIA
Bonfiglioli Transmission Ltd.
Mobility & Wind Industries
Thirumudivakkam
Kancheepuram - Tamil Nadu

Industry & Automation Solutions
Mannur Village, Sriperumbudur Taluk
Kancheepuram - Tamil Nadu

Industry & Automation Solutions
Pune - Maharashtra

ITALY
Bonfiglioli Riduttori S.p.A.
Industry & Automation Solutions
Calderara di Reno (BO)

Industry & Automation Solutions
Carpiano

Mobility & Wind Industries
Forlì

Industry & Automation Solutions
Rovereto

Selcom Group S.p.A.
Castel Maggiore (BO)

Castel Maggiore (BO)

Cadriano (BO)

NEW ZEALAND
Bonfiglioli Transmission (Aust.) Pty Ltd
Auckland - Ellerslie

SINGAPORE
Bonfiglioli South East Asia Pte Ltd
Singapore

SLOVAKIA
Bonfiglioli Slovakia s.r.o.
Považská Bystrica

SOUTH AFRICA
Bonfiglioli South Africa Pty Ltd.
Johannesburg

SOUTH KOREA
Bonfiglioli Korea Co., Ltd.
Busan

SPAIN
Tecnotrans Bonfiglioli S.A
Castellbisbal - Barcelona

TURKEY
Bonfiglioli Türkiye Jsc
Çiğli - Izmir

UNITED KINGDOM
Bonfiglioli UK Ltd.
Warrington - Cheshire

USA
Bonfiglioli USA Inc.
Hebron - Kentucky

VIETNAM
Bonfiglioli Vietnam Co. Ltd.
Ben Cat city, Binh Duong province

PRODUCTION ASSEMBLY SALES SERVICE

Bonfiglioli

We have a relentless commitment to excellence, innovation & sustainability. Our team creates, distributes and services world-class power transmission & drive solutions to keep the world in motion.

HEADQUARTERS

Bonfiglioli S.p.A.
Via Cav. Clementino Bonfiglioli, 1
40012 Calderara di Reno - Bologna (Italy)
Tel. +39 051 6473111