Bonfiglioli

evox Platform

PRODUCT CATALOGUE

We engineer dreams

INDEX

CONFIGURATION GUIDELINES 2
- Environmental conditions 3
- Product Selection Guidelines 4
  - Application Inputs 4
  - Gear Unit Selection 6
  - Verification 8

EVOX CP 10
- Product Overview 11
  - Technical features 12
  - Target Applications 14
  - Modularity 16
- Designation 18
  - Versions 20
  - Mounting positions 21
- Performance 22
  - EVOX In-Line Gearmotor 22
  - EVOX In-Line Gear Unit 43
  - EVOX In-Line Output Radial and Axial Loads 48
- Sizes 49
  - EVOX In-Line Gearmotor 49
  - EVOX In-Line Gear Unit 51
- Options | Available for EVOX In-Line gear unit 52
  - Option Designation - CP 52
  - Option Detail 54
  - More on Options List 61

ELECTRIC MOTOR EVOX 65
- Product Overview 66
  - Bonfiglioli Portfolio 66
  - Standards & Directives 69
  - Power output depending on the ambient temperature 71
  - Power output depending on the altitude 71
  - Terminal Box 71
  - Cable entry 71
  - Bearings 72
  - Product Modularity 73
- Designation 74
- Nameplate designation 76
- Winding 77
- Operation with inverter power supply 79
- Protection class 80
  - Insulation class 81
  - Versions 82
  - Cable entry position 83
- Performance 84
  - EVOX electric motor 84
- Brake | EVOX Electric Motor 89
  - Brake Option List 89
  - Brake Performance 90
  - Brake Option List Deep Dive 92
  - Options | Brake 95
- Options | EVOX Electric Motor Side 100
  - Option Designation 100
  - Option Detail 102
- EVOX elctric motor dimension 110
  - Standard motor without brakes 110
  - Standard motor with brake 111
  - Brake and E-motor options 112

ORDER INFO 113
- Our worldwide presence 114

Configuration Guidelines

ENVIRONMENTAL CONDITIONS

Ambient temperature

Ambient temperature directly affects gear unit and motor performance.

Please observe the following guidelines for correct product configuration:
• **Oil Seals:** Refer to the "**Gear Unit Options**" section to select the appropriate oil seal based on the application operating conditions.
• **Lubricant:** Rated data are based on an ambient temperature of +25°C. The standard operating temperature range is -20°C to +40°C.
If the operating temperature falls outside the standard range, select the "SO" option (gear unit supplied without oil) and refer to the lubricant selection table to choose the appropriate oil for the operating temperature range.
Optional low-temperature (-40°C to 0°C) and high-temperature (+20°C to +60°C) configurable variants are available, complete with dedicated oil seals and lubricants for reliable operation. Specific lubricant and option limitations may apply. For operating temperatures below -40°C or above +60°C, please **contact Bonfiglioli's Technical Service**.
• **Gear unit housing and component resistance:** For operation between -40°C and -10°C, a soft start is recommended to avoid shock loads and overloads due to increased oil viscosity.
• **Motor:** For applications requiring enhanced resistance to humidity or extreme ambient temperatures, refer to the motor tropicalisation option.
Standard motors can operate within a temperature range of -15°C to +40°C. For operating temperatures below -15°C or above +40°C, refer to the "**E-Motor Configuration Guidelines & Setup**" section.
Rated motor power values are calculated for standard environmental conditions (+40°C ambient temperature; altitude < 1000 m a.s.l.) in accordance with CEI EN 60034-1.

Altitude

The installation altitude influences the gear unit and motor performance. If during operation the gear unit is installed with an altitude > 1000 m , **contact Bonfiglioli's Technical Service** to identify the correct solution for requested performance , sealing type and needed mounting position. For motor power derating data, see the **e-motor Configuration Guidelines & Setup** Catalogue Section.
If the application altitude is above 1500 m and the gear unit is factory filled with oil, place the product with the oil drain plug at the top and open it to balance out the internal pressure and the external atmosphereprior to installing the unit, then close the oil plug. Make sure that no object or substance falls into the gear unit, as it could damage its internal components during its operating lifetime.

Noise Level

Gear unit noise levels have been tested according to UNI ISO 3746. The noise of the gear unit is always lower than the motor's, which is compliant with the CEI EN 60034-9 standard.

Corrosion Protection

The gear unit and motors can be configured with several devices to enhance their protection against corrosion, see EVOX Painting Options against corrosion protection and FO option to add stainless steel components to your product.

Storage

See the Product Storage Guidelines on the EVOX user manual at **www.bonfiglioli.com** for a thorough description of every environment and treatment conditions (for less and more than 6 storage months).
Observe the following instructions to correctly store the products:
a) Do not store outdoors, in areas exposed to the weather conditions or with excessive humidity.
b) always place wooden boards or other materials between the products and the floor.
The gear units should have no direct contact with the floor.
c) In case of long-term storage, all machined surfaces such as flanges, shafts and couplings must be coated with a suitable rust inhibiting product (Mobilarma 248 or equivalent).
In addition, the gear units must be placed with the filler plug at the top and filled up with oil.
Before putting the units into operation, top-up with the appropriate quantity and type of oil (refer to the User's manual available at **www.bonfiglioli.com**).

Gear Unit Efficiency

For Helical In-Line gear units, consider as a general order of magnitude $0{,}98^{Nst}$ [Nst = reduction stage number], for an efficient calculation.

PRODUCT SELECTION GUIDELINES

In order to correctly choose the product that fits your needs, please refer to the Application Input parameters listed below. Choose the configuration in the performance table, then verify your EVOX with the **Verification parameters**.

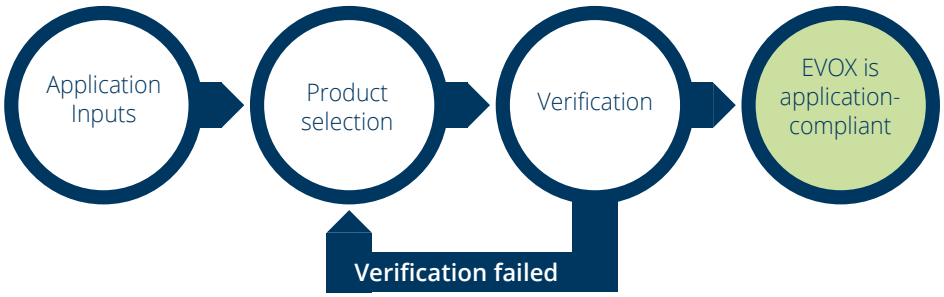

APPLICATION INPUTS

Some fundamental data are necessary to assist the correct selection of a gear unit or gearmotor. The table below briefly sums up this information.

To simplify selection, fill in the table and send a copy to **Bonfiglioli Technical Service**, which will select the most suitable gear unit for your application.

	Type of application	
P_{r2}	Output power at n_2	.....kW
M_{r2}	Output torque at n_2	.....Nm
n_2	Output speed	.....rpm
n_1	Input speed	.....rpm
R_{c2}	Radial load on output shaft	.....N
x_2	Load application distance (*)	.....mm
	Load orientation at input	.....
	Output shaft rotation direction (CW-CCW) (**)	.....
R_{c1}	Radial load on input shaft	.....N
x_1	Load application distance (*)	.....mm
	Load orientation at input	.....
	Input shaft rotation direction (CW-CCW) (**)	.....

A_{c2}	Axial load on output shaft (+/–) (***)	.....N
A_{c1}	Axial load on input shaft (+/–) (***)	.....N
J_c	Moment of inertia of the load	.....Kgm^2
t_a	Ambient temperature	.....C°
	Altitude above sea level	.....m
	Duty type to IEC norms	S...../.....%
Z_r	Startup frequency	.....1/h
	Motor voltage	V
	Brake voltage	V
	Frequency	.....Hz
M_b	Brake torque	.....Nm
	Motor protection degree	IP.....
	Insulation class	.....

(*) Distance x1-2 refers to the distance between the point of force application and the shaft shoulder (if not indicated, the force acting at half the shaft extension will be considered).

(**) CW = clockwise; CCW = counter-clockwise

(***) + = push; – = pull

Application Service Factor

The Suggested Service Factor [S_f] is the ratio between the Nominal Table Torque [M_{r2}] and the Calculated Torque [M_{c2}] needed by your Application.

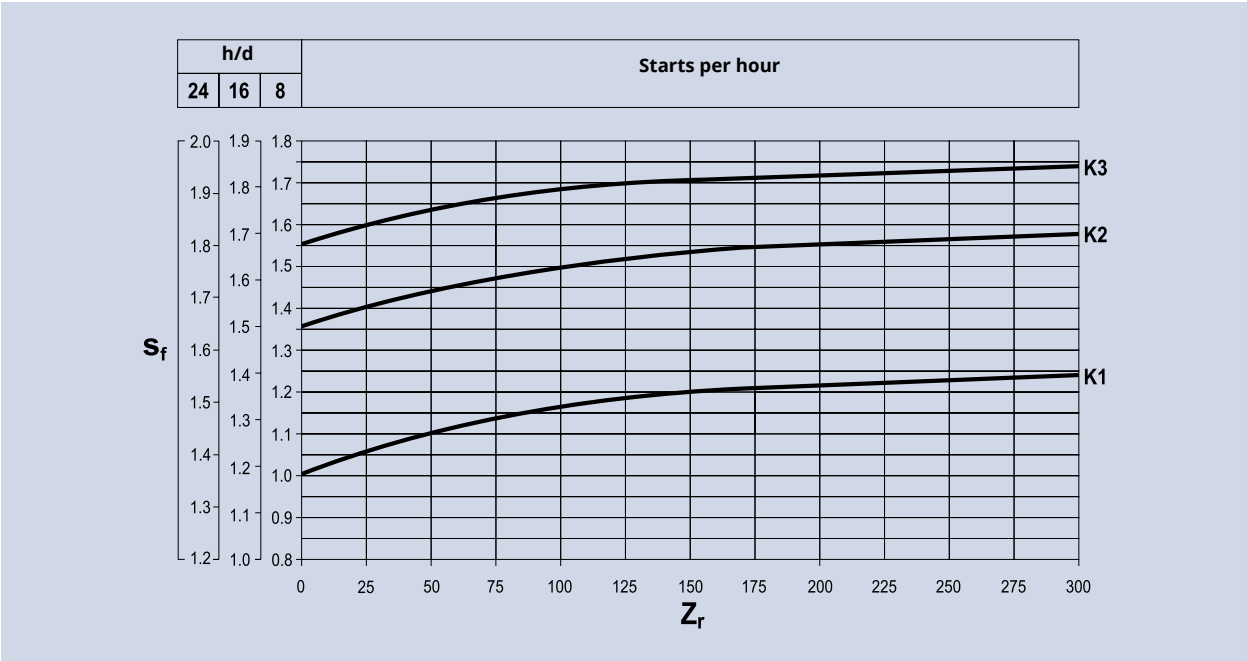

The [S_f] calculation depends on 3 factors in the previous diagram:

- **Start-up frequency** [Z_r]: this parameter **describes the gear unit start-ups per hour**
- **Daily work hours**: this parameter selects the y axis where you can check your Suggested Service Factor [S_f]
- **Mass acceleration factor** [**k..**]: this parameter describes the shock loads of your application on the Gear Unit and drives the fs curve selection

K1: Uniform Load	$K \leq 0.25$	When $K = \frac{J_c}{J_m}$
K2: Moderate shock load	$0.25 < K \leq 3$	
K3: Heavy shock load	$3 < K \leq 10$	
K4: Contact Bonfiglioli's Technical Service	$K > 10$	

J_c = Driven masses moment of inertia reduced to the motor shaft

$J_c = J_a\left(\frac{1}{i^2}\right)$

J_a = Driven masses moment of inertia reduced to the gear unit output shaft

i = Gear Ratio

J_m = EVOX e-motor moment of inertia reduced to the motor shaft

PRODUCT SELECTION GUIDELINES

GEAR UNIT SELECTION

Gear Unit Configuration

a) Determine Suggested Service Factor [S_f] according to type of duty (factor K), number of starts per hour [Z_r] and hours of operation.

b) From values of torque [M_{r2}], speed [n_2] and dynamic efficiency [ν_d] the required input power can be calculated from the equation:

$$P_{r1} = \frac{M_{r2} \cdot n_2}{9550 \cdot \eta_d} \text{ [kW]}$$

Value of [η_d] for the captioned gear unit can be sorted out from Gear Unit Efficiency paragraph.

c) Consult the gearmotor selection tables and refer to the appropriate rated power [P_n]:

$$P_n \geq P_{r1}$$

At the end consider a Gear Unit configuration within a Service Factor **S** that match or exceeds the Suggested Service Factor [S_f].

$$S = \frac{M_{n2}}{M_2} = \frac{P_{n1}}{P_1}$$

Unless otherwise specified, power [P_n] of motors indicated in the catalogue refers to continuous duty S1. For motors used in conditions other than S1, the type of duty required by reference to CEI 2-3/IEC 34-1 Standards must be mentioned.

For duties from S2 to S9 extra power output can be obtained with respect to continuous duty, see the "e-motor Configuration Guidelines & Setup" catalogue section.

Accordingly the following condition must be satisfied:

$$P_n \geq \frac{P_{r1}}{f_m}$$

The adjusting factor [f_m] can be obtained from table below.

Intermittence ratio

$$I = \frac{t_f}{t_f + t_r} \cdot 100$$

t_f = operating time under constant load

t_r = rest time

Duration							
	S2			S3*			S4 - S9
	of the duty cycle [min]			Cycle duration factor [l]			Please contact us
	10	30	60	25%	40%	70%	
f_m	1.35	1.15	1.05	1.25	1.15	1.1	

* Cycle duration, in any event, must be 10 minutes or less. If it is longer, please **contact Bonfiglioli's Technical Service**

Next, refer to the appropriate [P_n] section within the gearmotor selection charts and locate the unit that features the desired output speed [n_2], or closest to, along with a Service Factor **S** that meets or exceeds the Suggested Service Factor [S_f].

The Service Factor is so defined:

$$S = \frac{M_{n2}}{M_2} = \frac{P_{n1}}{P_1}$$

Selection of speed reducer and gear unit with IEC motor adapter

a) Determine Suggested Service Factor [S_f].

b) Assuming the required output torque for the application [M_{r2}] is known, the calculation torque can be then defined as:

$$M_{c2} = M_{r2} \cdot S_f$$

c) The gear ratio is calculated according to requested output speed [n_2] and drive speed [n_1]:

$$i = \frac{n_1}{n_2}$$

Once values for [M_{c2}] and [**i**] are known consult the rating charts under the appropriate input speed [n_1] and locate the gear unit that features the gear ratio closest to [**i**] and at same time offers a rated torque value [M_{n2}] so that:

$$M_{n2} \geq M_{c2}$$

If a IEC motor must be fitted on the gear unit, check the geometrical compatibility with the gear unit in **Gear units performance tables**.

PRODUCT SELECTION GUIDELINES

VERIFICATION

After the selection of the speed reducer, or gearmotor, is complete it is recommended that the following verifications are conducted:

Thermal capacity

For altitude < 3000m and ambient temperature <60°C, these Gear Units thermal power is not a possible cause of fault. Should the product be operated under different conditions, please **contact Bonfiglioli's Technical Service**.

To allow a proper heat dissipation, make sure the product is installed with adequate air circulation, away from temperature-sensitive components.

Maximum torque

The maximum torque (intended as instantaneous peak load) applicable to the gearbox must not, in general, exceed 200% rated torque Mn2 (175% for CP37). Therefore, check that this limit is not exceeded, using suitable torque limiting devices, if necessary.

Radial Load Calculation on Gear Unit Shafts

External transmission could generate loads on the Gear Unit shafts. The admissible radial load for the given combination of gearbox an ratio is given by the **Catalog Performance Table**.

The guidelines below are used to calculate the radial load.

This is a very simplified method to get the order of magnitude of the radial loads on the Gear Unit shafts. We recommend you follow more detailed considerations on your application to select the correct EVOX Gear Unit.

$$R_c = \frac{2000 \cdot M_a \cdot K_r}{d}$$

$K_r = 1$	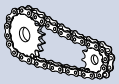
$K_r = 1.25$	
$K_r = 1.5 - 2.0$	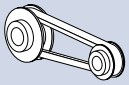

M_a [Nm]	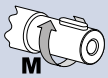
d [mm]	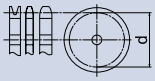

Position of the radial component on the gear unit shafts

Radial loads in performance tables are considered as applied in the middle of the shaft.

To compare the radial component of the force applied on the output shaft [R_c] with the value [R_{max}] specified in the performance tables, shift the line of action of [Rc] using the following formula so as to keep the stress on bearings unchanged.

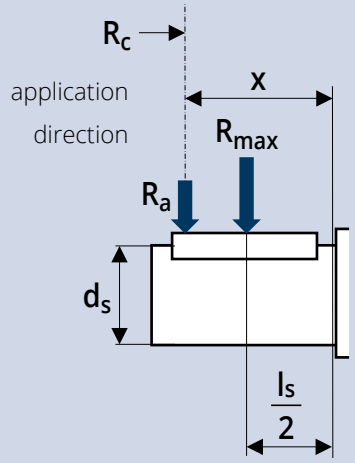

$$R_a = R_{max} \frac{l_1}{l_2 + x}$$

The following formula needs to be verified:

$$R_a > R_c$$

Check values [l_1] and [l_2] in the following tables:

In-Line Gear Unit Output Shaft								
Size	l1	l2	ds	ls	l1	l2	ds	ls
	[mm]				[in]			
07	87	67	20	40	3.425	2.638	3/4	1-9/16
17	97.75	77.75	20	40	3.848	3.061	3/4	1-9/16
37	118	93	25	50	4.646	3.661	1	2
47	130.2	100.2	30	60	5.126	3.945	1-1/4	2-3/8

Solid input shaft				
Size	l1	l2	ds	ls
	[mm]			
HS1	78	58	16	40
HS2	100	80	19	40
HS3	117.5	92.5	24	50
	[in]			
NHS1	3.071	2.283	5/8	1-9/16
NHS2	3.937	2.283	3/4	1-9/16
NHS3	4.626	3.642	7/8	2

Axial Load on Shafts

If the force on the output shaft has both radial and axial components, **contact Bonfiglioli's Technical Service** and check if your solution is suitable.

EVOX CP
In-line gearmotor and gear unit

PRODUCT OVERVIEW

EVOX is Bonfiglioli's new gearmotor platform; the EVOX family starts with the new **CP**.

EVOX CP is a Helical In-Line product designed with a smooth housing and a performance/value focus.

The interface, aligned with the market standards, allows adapting EVOX CP to a wide range of industrial machines without the need for specific machining. Thanks to the wide range of versions/options and motors available in **Bonfiglioli's portfolio**, this new product can meet a wide range of application needs.

Features	Benefits
Overall dimensions aligned with market standards	Fully interchangeable with market standards
Smooth surface	Easy-clean shape
Every mounting position available with the standard Product	Lower codes in stock
High torque density for in-line technology	High compactness and performances
Reinforced radial/axial bearing option	Product ready for external belt and chain transmission
Feet & flange output & high speed ratios	Product ready for pumps & compressors

EVOX CP sizes	Nominal torque	Gear ratio range	Maximum compact gearmotor power	
	[Nm]		[kW]	[hp]
07	55	2.8-55.3	0.37	0.5
17	100	2.4-85.9	0.75	1
37	200	2.3-133	1.5	2
47	335	2.4-172	4	5.5

PRODUCT OVERVIEW

TECHNICAL FEATURES

Gear Unit – In-Line CP

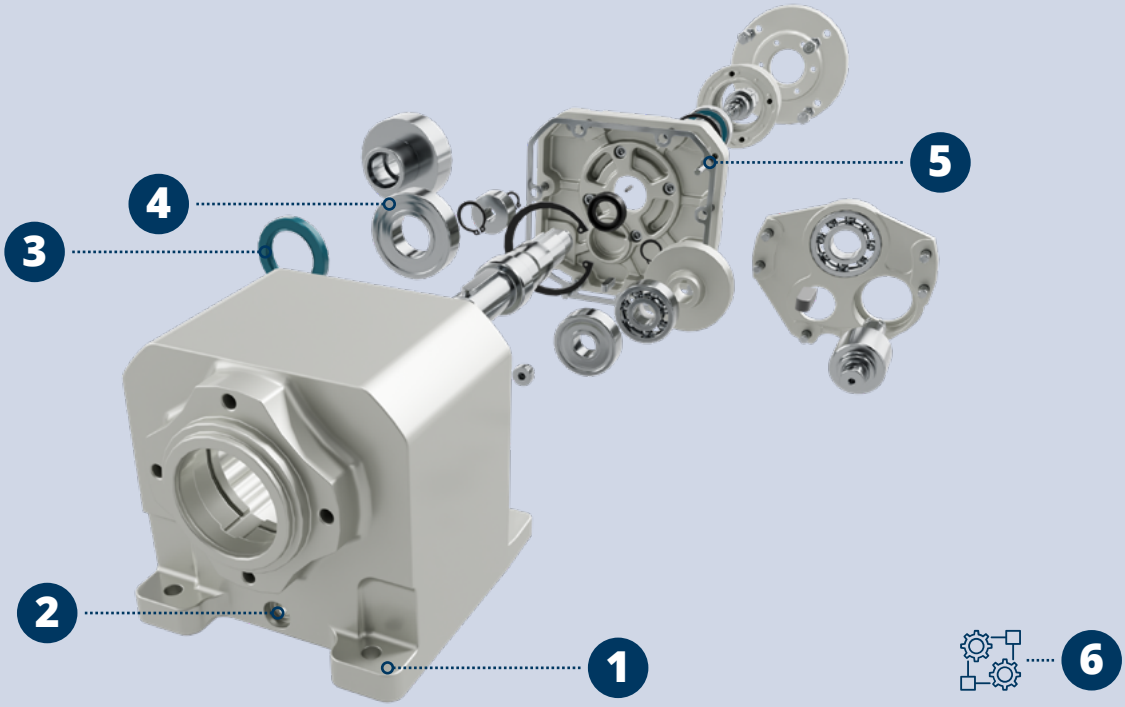

1 Overall dimensions aligned with market standards

2 Every mounting position possible with one product

With its unique oil level, this gear unit can be fitted on any position.

3 Improved reliability for every standard component

Using premium components improves the reliability of the whole product.

4 Efficiency and low noise gears set

High quality gears improve overall efficiency, reduce oil heating preventing leakage through the seals and allow silent operation.

5 Product flexibility/modularity

Easy assembly with simple equipment.

6 Great set of versions and options

Electric Motor – MXN/MNN

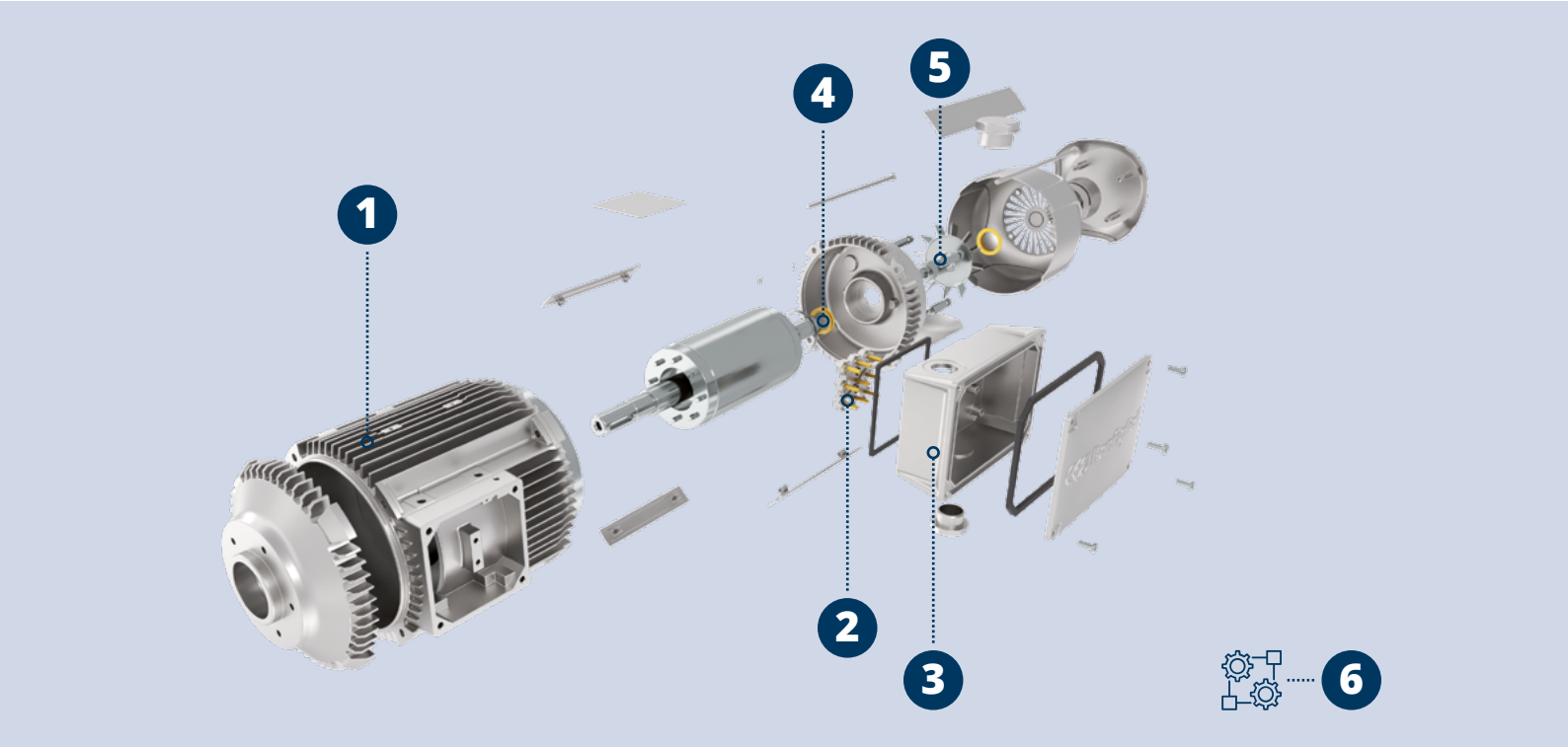

1 Uncompromised IE3/NEMA Premium Efficiency

This motor is compliant with the most severe regulations in the world in terms of efficiency.

2 One motor for EU, USA, India & Australia

With its multiple voltage 9-PIN terminal box, you could get the right voltage for most markets.

3 Reliability focus for every standard component

Using more reliable components improves the reliability of the whole product.

4 Rotating terminal box

With this feature, you could rotate the terminal box in every position you need.

5 Modular brakes and encoders

High performance DC dynamic brakes and various encoders features to complete your system

6 Wide range of versions and options

PRODUCT OVERVIEW

TARGET APPLICATIONS

- **Product fully interchangeable with market standard**
- **IE3/NEMA Premium uncompromised efficiency** making it technically ready for premium efficiency applications worldwide.

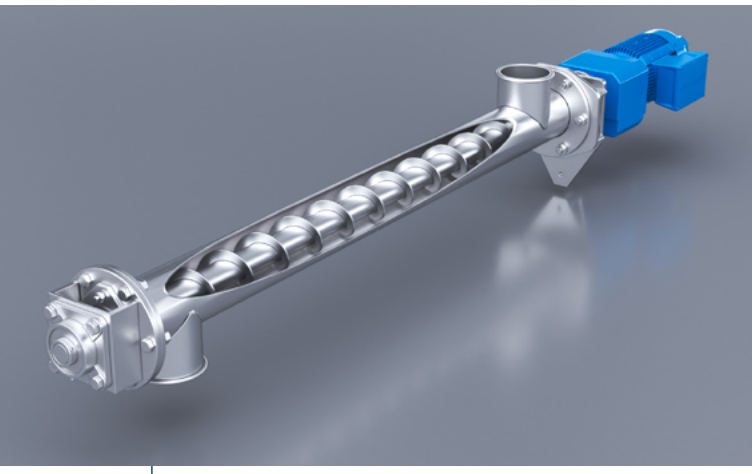

Options for high radial and axial loads making this product suitable for screw conveyors and/ or decentralized transmissions.

Compact design making it compatible even with severe application constraints.

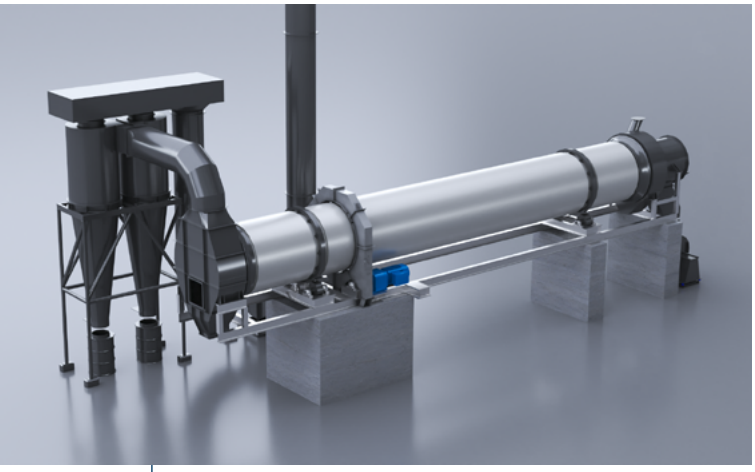

Best in class torque rating with the highest torque density of its category

Suitable applications

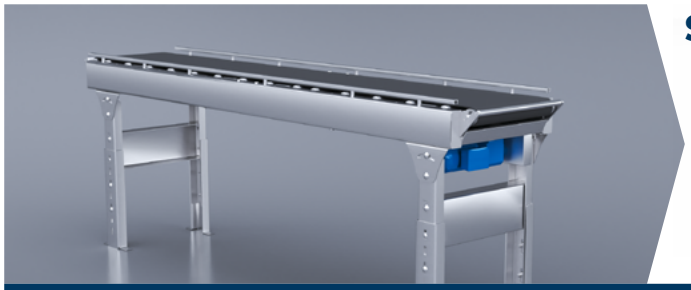

Smart Conveyor

Features	Benefits
Advanced and accurate sensorless vector control providing high starting torque at low speed	Reducing current consumption at starting phase
Built-in PLC functions	Smart Conveyor programming without PLC
Standby mode	Energy saving
Integrated monitoring tool	Inverter failure prevention and diagnostics analysis

Wrapping Machine

Features	Benefits
Sensorless accurate control or closed-loop advanced vectorial control	Wrapping Machine progressive start and stop
PI control with advanced derivative control	Optimized film tension control
Configurable position and speed control via parameters	Variable lifting speed and up/down controls
Built-in PLC functions	Wrap cycle adjustment
Possible sync between several drives	Machine can operate without any PLC

Vertical automatic storage

Features	Benefits
SBC (Safety Brake Control)	Minimized application risks
Sensor-connected ready	Scheduled maintenance-ready
All EVOX encoders are compatible with AxiaVert	Flexible application
iOS & Desktop user-friendly application and Bluetooth/Wi-Fi inverter connection	• Plug & Play solution • Easy troubleshooting

PRODUCT OVERVIEW

MODULARITY

Gear Unit – In-Line CP

These gear unit solutions can meet **all** basic **MKT needs**.
Soon to be followed by several other products.

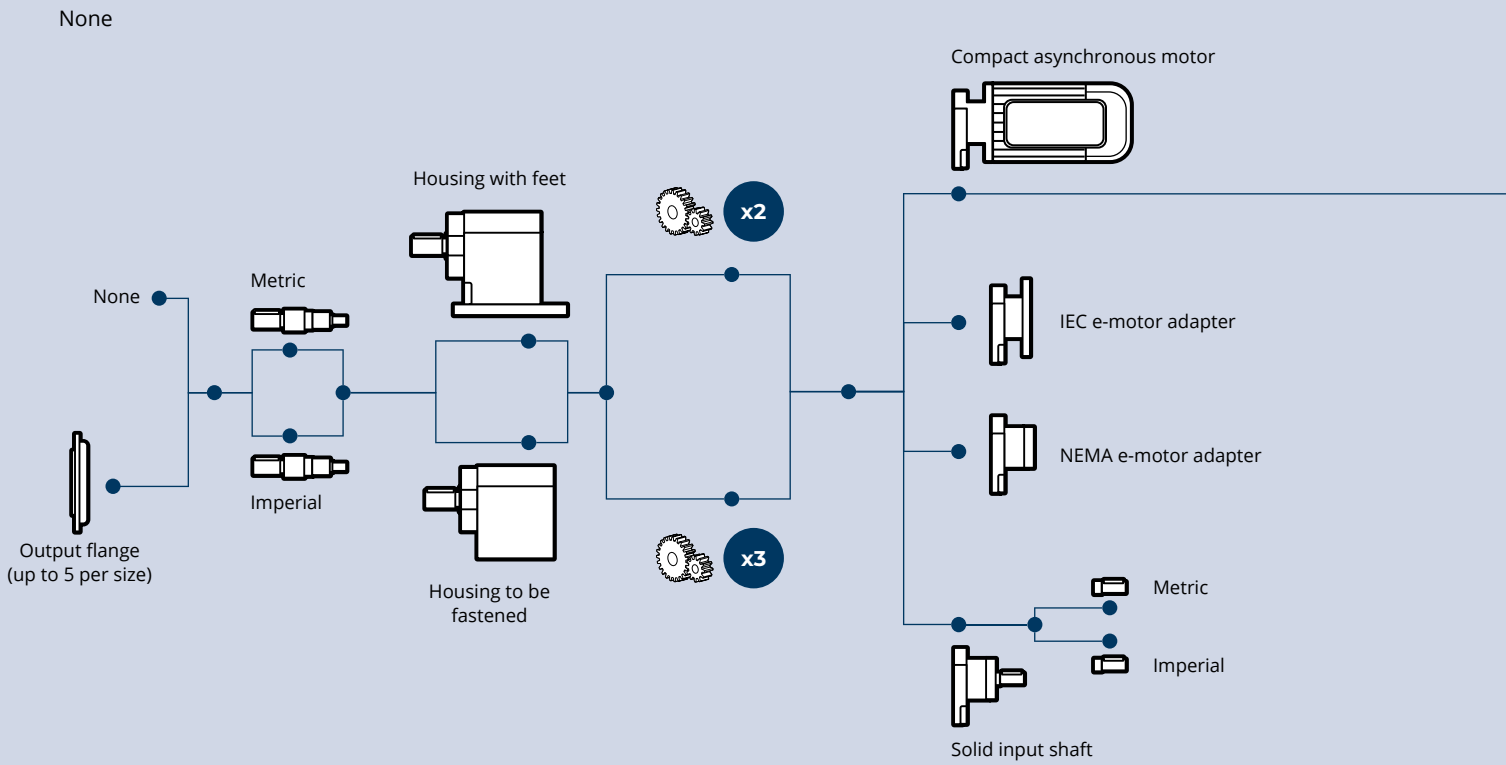

Feet and Flange configuration available

Electric Motor – MXN/MNN

Lots of e-motor versions available to perfectly **match** your **application needs.**

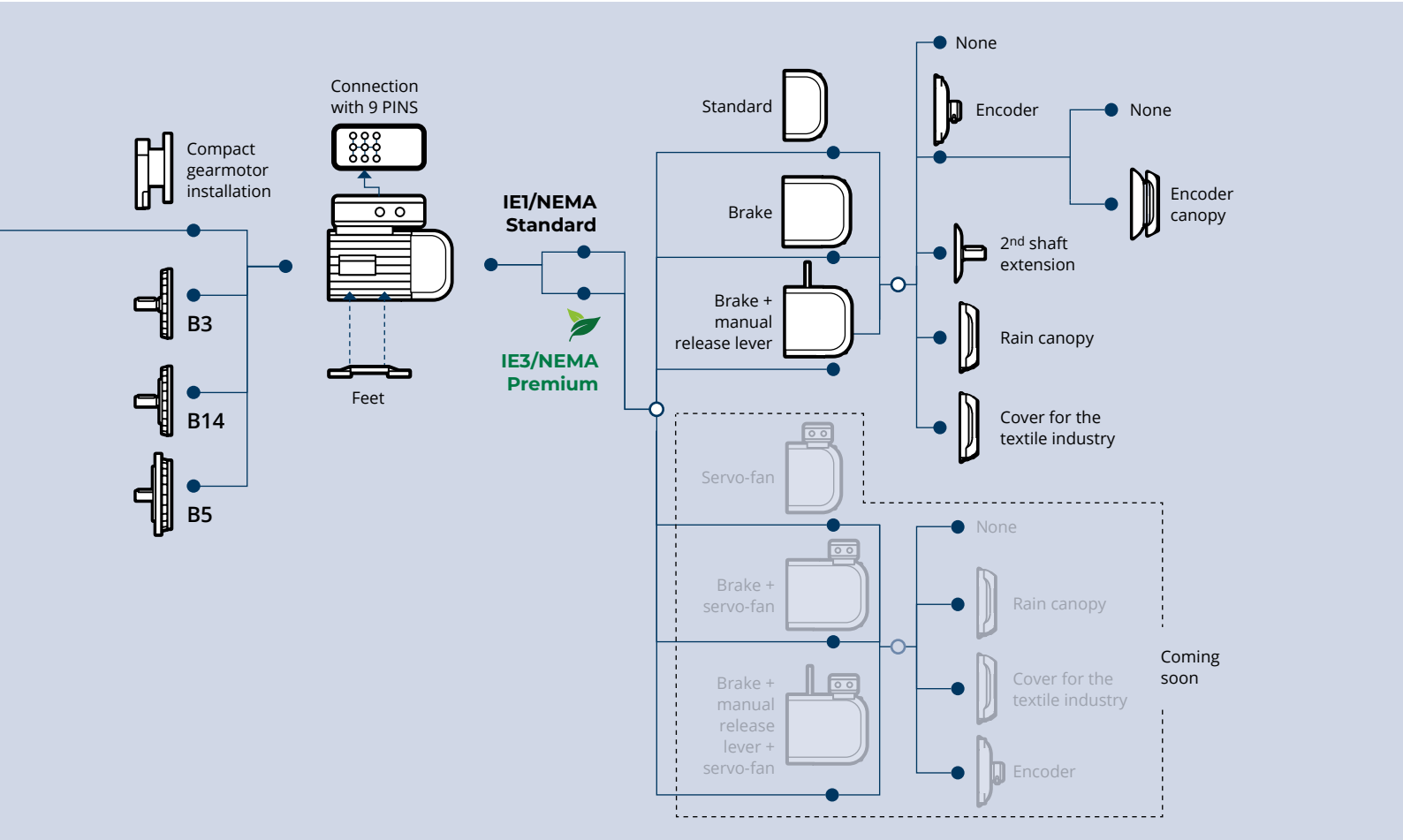

DESIGNATION

Gear Unit – In-Line CP

CP	37	A	2	N	P	F140	7.5	S20	All	+	Options	+	Motor

Gear unit series
CP In-Line

Size
07 55 Nm
17 100 Nm
37 200 Nm
47 335 Nm

New product design
A

Stages
2
3

Output shaft
- Metric
N Inch

Housing
P Feet
U Shaft mounted

Output flange dimension
- No flange
F120 Ø120 flange
F140 Ø140 flange
F160 Ø160 flange
F200 Ø200 flange
F250 Ø250 flange

Gear ratio
See "Performance Tables - Gear Units"

Inputs
See "Input table"

Mounting positions
All Every mounting position is possible as standard
For exceptions see [link]

See "Options | available for EVOX In-Line gear unit"

Electric Motor – MXN/MNN

MXN	20MB	4	WD1	IP55	CLF	C	N	IC0	MFC	+	Brake	+	Options

See **"Option | EVOX Electric Motor Side"**

See **"Brake | EVOX Electric Motor"**

Cable entry position

MFC Metal fan cover

Cable entry position

Terminal box size S:

IC0 (Standard) Power cable entry at 90° and 270° to the axis

IC1 Power cable entry at 0° and 180° to the axis

Terminal box size L:

IC0 (Standard) Power cable entry and separate supply cable entry at 90° and 270° + brake cable entry at 180°

IC1 Power cable entry and brake cable entry at 180° relative to the axis + separate supply cable entry at 90°

IC2 Power cable entry and brake cable entry at 180° relative to the axis + separate supply cable entry at 270°

Terminal box position

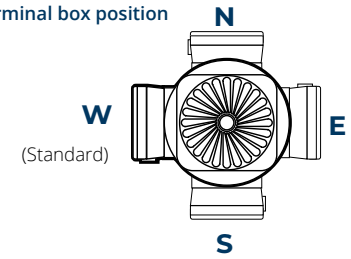

(Standard)

Motor Versions – Integrated motors (MXN, MNN)

Insulation class

CLF

CLH

IP protection level

IP55 (Standard) - Dust and water jet protection

IP56 - Dust and powerful jet protection

Winding

See "**Winding - Voltage/Frequency correspondences table**"

Poles

4

Size

See **"Asynchronous E-Motor Performance Table"**

Asynchronous Compact E-motor series

MXN IE3/NEMA Premium

MNN IE1/NEMA Standard

DESIGNATION

VERSIONS

Gear Unit – In-Line CP

Input table

Input type	Sizes								
IEC motor adapter	P56	P63	P71	P80	P90	P100	P112	P132	
Compact motor adapters	-	S05	S10	S20	S25	S30	S35	S40	
Solid Shaft		HS1/NHS1		HS2/NHS2		HS3/NHS3			
NEMA motor adapter			N56	N143	N145	N182	N184	N213	N215
CP07									
CP17		X							
CP37		X		X					
CP47				X		X			

IEC and NEMA input coupling available

X Solid input shaft coupling available

Output flange table

	Sizes					
	F120	F140	F160	F200	F250	F300
CP07	X					
CP17	X	X	X			
CP37	X	X	X	X	X	
CP47		X	X	X	X	

Output flange compatible

X PF feet and flange version availability

MOUNTING POSITIONS

Gear Unit – In-Line CP

Every mounting position possible with one code

Thanks to the enhanced performances and the reliability of components, this gear unit can be mounted in every possible position as standard.

EVOX CP is supplied with a long-life oil fill and a single level for every possible mounting position. By selecting the SO option, the gear unit is shipped by Bonfiglioli without oil and can be filled by the customer, using a special plug.

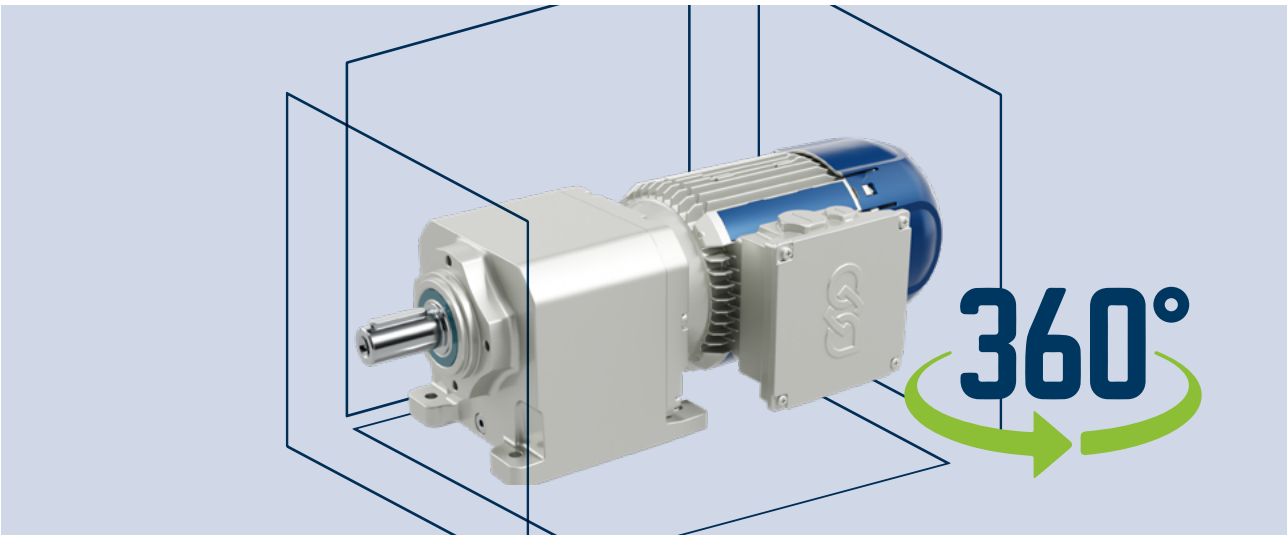

Mounting position limitations

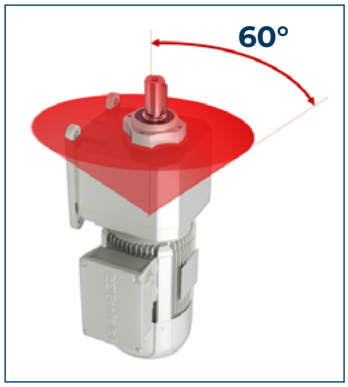

Reinforced output bearings option [OHA - OHR]

If you need EVOX CP with both:

- OHR or OHA

- vertical position with the output shaft up, or a position within 60° of it, facing any direction, **contact Bonfiglioli's Technical Service** and check whether the standard oil level is correct for your application or if a customised solution is required.

PERFORMANCE

EVOX IN-LINE GEARMOTOR

Tables introduction

Number of poles

Nominal motor output power

Gear Unit data calculated @ indicated rpm in input and **50Hz** motor frequency

Gear Unit data calculated @ indicated rpm in input and **60Hz** motor frequency

Gear ratio

Gear unit size

Gear unit stages

P_1 = 0.25 kW / 0.33 HP

4-POLE MOTORS · **IE3 PREMIUM EFFICIENCY**

50Hz				60Hz							
n_2	M_2		S	n_2	M_2		S	i	Size	Stages	IEC Input	Compact EVOX Input
rpm	Nm	lb·in		rpm	Nm	lb·in			CP		BXN	MXN
62.5	18	159	3.0					22.5	**07**	3	63MA	05MA
54.1	21	186	2.6					26.0				
50.1	23	204	2.4	61.4	19	168	2.9	28.1				

Service factor: $S = M_{n2}/M_2$

You can see Mn2 in the Gear Unit Performance Table

IEC Motor size

Compact Motor size

Output torque calculated with the indicated compact IE3/NEMA Premium motor

Output speed calculated with the indicated compact IE3/NEMA Premium motor

Performance data are calculated at a temperature of 25°C, and altitude < 1000m.

The table shows the combinations that provide a service factor between 0.9 and 3.

Refer to the **Configuration Guidelines & Setup** section, before configuring the motor, to select the correct power.

P_1 = **0.12 kW / 0.16 HP**

4-POLE MOTORS · **IE3 PREMIUM EFFICIENCY**

50Hz				60Hz							
n_2	M_2		S	n_2	M_2		S	i	Size	Stages	IEC Input	Compact EVOX Input
rpm	Nm	lb·in		rpm	Nm	lb·in			CP		BXN	MXN
62.5	18	159	3.0					22.5	**07**	3	63MA	05MA
54.1	21	186	2.6					26.0				
50.1	23	204	2.4	61.4	19	168	2.9	28.1				
42.8	27	239	2.1	52.5	22	195	2.5	32.9				
36.1	32	283	1.7	44.3	26	230	2.1	38.9				
32.3	36	319	1.5	39.5	29	257	1.9	43.6				
30.4	38	336	1.5	37.2	31	274	1.8	46.3				
27.9	41	363	1.3	34.1	34	301	1.6	50.5				
25.4	45	398	1.2	31.2	37	327	1.5	55.3				
33.7	34	301	2.9					41.8	**17**	3	63MA	05MA
28.9	40	354	2.5					48.7				
26.8	43	381	2.3	32.9	35	310	2.9	52.4				
24.9	46	407	2.2	30.5	38	336	2.7	56.6				
21.3	54	478	1.9	26.0	44	389	2.3	66.2				
17.9	64	566	1.6	22.0	52	460	1.9	78.5				
16.4	70	620	1.4	20.1	57	504	1.8	85.9				
16.8	68	602	2.9					83.6	**37**	3	63MA	05MA
15.7	73	646	2.7					89.7				
13.5	85	752	2.4	16.6	69	611	2.9	104.0				
11.5	99	876	2.0	14.1	81	717	2.5	122.1				
10.6	108	956	1.8	12.9	89	788	2.3	133.2				
8.9	129	1142	2.6					158.0	**47**	3	63MA	05MA
8.2	140	1239	2.4	10.0	114	1009	2.9	171.9				

PERFORMANCE

EVOX IN-LINE GEARMOTOR

Performance Table

P_1 = 0.18 kW / 0.25 HP

4-POLE MOTORS · **IE3 PREMIUM EFFICIENCY**

50Hz				60Hz							
n_2	M_2		S	n_2	M_2		S	i	Size	Stages	IEC Input	Compact EVOX Input
rpm	Nm	lb·in		rpm	Nm	lb·in			CP		BXN	MXN
86.4	20	177	2.8					15.9	**07**	2	63MB	05MB
75.0	23	204	2.4	93.9	18	159	3	18.3	**07**	3	63MB	05MB
65.5	26	230	2.1	82.0	21	186	2.6	21.0				
61.0	28	248	2.0	76.4	23	204	2.4	22.5				
52.8	33	292	1.7	66.1	26	230	2.1	26.0				
48.9	35	310	1.6	61.3	28	248	2	28.1				
41.8	41	363	1.3	52.3	33	292	1.7	32.9				
35.3	49	434	1.1	44.2	39	345	1.4	38.9				
31.5	55	487	1.0	39.4	44	389	1.3	43.6				
29.7	58	513	0.9	37.1	46	407	1.2	46.3				
				34.0	50	443	1.1	50.5				
				31.1	55	487	1	55.3				
50.4	34	301	2.9					27.2	**17**	3	63MB	05MB
43.9	39	345	2.6					31.3				
38.1	45	398	2.2	47.7	36	319	2.8	36.0				
35.4	49	434	2.1	44.3	39	345	2.6	38.8				
32.8	52	460	1.9	41.1	42	372	2.4	41.8				
28.2	61	540	1.6	35.3	49	434	2.1	48.7				
26.2	66	584	1.5	32.8	52	460	1.9	52.4				
24.3	71	628	1.4	30.4	57	504	1.8	56.6				
20.7	83	735	1.2	26.0	66	584	1.5	66.2				
17.5	98	867	1.0	21.9	78	690	1.3	78.5				
16.0	108	956	0.9	20.0	86	761	1.2	85.9				
25.6	67	593	3.0					53.6	**37**	3	63MB	05MB
23.6	73	646	2.7					58.2				
22.7	76	673	2.6					60.4				
20.1	86	761	2.3	25.1	68	602	2.9	68.5				
18.8	91	805	2.2	23.5	73	646	2.7	73.1				
16.4	105	929	1.9	20.6	84	743	2.4	83.6				
15.3	112	991	1.8	19.2	90	797	2.2	89.7				
13.2	130	1151	1.5	16.5	104	920	1.9	104.0				
11.2	153	1354	1.3	14.1	122	1080	1.6	122.1				
10.3	167	1478	1.2	12.9	133	1177	1.5	133.2				
15.2	113	1000	3.0					90.4	**47**	3	63MB	05MB
14.3	120	1062	2.8					96.1				
12.6	137	1213	2.4					109.4				
11.7	147	1301	2.3	14.7	117	1036	2.9	117.1				
10.2	169	1496	2.0	12.7	135	1195	2.5	135.1				
8.7	198	1752	1.7	10.9	158	1398	2.1	158.0				
8.0	215	1903	1.6	10.0	172	1522	1.9	171.9				

P_1 = **0.25 kW / 0.33 HP**

4-POLE MOTORS · **IE3 PREMIUM EFFICIENCY**

50Hz				60Hz							
n_2	M_2		S	n_2	M_2		S	i	Size	Stages	IEC Input	Compact EVOX Input
rpm	Nm	lb·in		rpm	Nm	lb·in			CP		BXN	MXN
121.2	20	177	2.8					11.5	**07**	2	71MA	10MA
103.5	23	204	2.4	127.2	19	168	2.9	13.4				
87.3	27	239	2.0	107.4	22	195	2.5	15.9				
75.8	31	274	1.7	93.2	26	230	2.1	18.3	**07**	3	71MA	10MA
66.2	36	319	1.5	81.3	29	257	1.9	21.0				
61.7	39	345	1.4	75.8	31	274	1.7	22.5				
53.3	45	398	1.2	65.6	36	319	1.5	26.0				
49.5	48	425	1.1	60.8	39	345	1.4	28.1				
42.2	57	504	1.0	51.9	46	407	1.2	32.9				
				43.8	54	478	1.0	38.9				
				39.1	61	540	0.9	43.6				
70.4	34	301	2.9					19.7	**17**	2	71MA	10MA
60.0	40	354	2.5					23.2				
55.0	43	381	2.3	67.6	35	310	2.8	25.2				
51.0	47	416	2.1	62.6	38	336	2.6	27.2	**17**	3	71MA	10MA
44.4	54	478	1.9	54.6	44	389	2.3	31.3				
38.5	62	549	1.6	47.3	50	443	2.0	36.0				
35.8	67	593	1.5	44.0	54	478	1.8	38.8				
33.2	72	637	1.4	40.8	59	522	1.7	41.8				
28.5	84	743	1.2	35.0	68	602	1.5	48.7				
26.5	90	797	1.1	32.5	73	646	1.4	52.4				
24.5	97	859	1.0	30.2	79	699	1.3	56.6				
				25.8	93	823	1.1	66.2				
				21.7	110	974	0.9	78.5				
33.9	70	620	2.8					40.9	**37**	3	71MA	10MA
29.7	80	708	2.5					46.8				
27.6	86	761	2.3	34.0	70	620	2.8	50.2				
25.9	92	814	2.2	31.8	75	664	2.7	53.6				
23.8	100	885	2.0	29.3	81	717	2.5	58.2				
23.0	104	920	1.9	28.2	85	752	2.4	60.4				
20.3	118	1044	1.7	24.9	96	850	2.1	68.5				
19.0	126	1115	1.6	23.4	102	903	2.0	73.1				
16.6	144	1275	1.4	20.4	117	1036	1.7	83.6				
15.5	154	1363	1.3	19.0	125	1106	1.6	89.7				
13.3	179	1584	1.1	16.4	146	1292	1.4	104.0				
11.4	210	1859	1.0	14.0	171	1513	1.2	122.1				
				12.8	186	1646	1.1	133.2				
19.4	123	1089	2.7					71.6	**47**	3	71MA	10MA
17.3	138	1221	2.4	21.3	112	991	3.0	80.2				
15.4	155	1372	2.2	18.9	126	1115	2.6	90.4				
14.4	165	1460	2.0	17.7	135	1195	2.5	96.1				
12.7	188	1664	1.8	15.6	153	1354	2.2	109.4				
11.9	201	1779	1.7	14.6	164	1452	2.0	117.1				
10.3	232	2053	1.4	12.6	189	1673	1.8	135.1				
8.8	272	2407	1.2	10.8	221	1956	1.5	158.0				
8.1	296	2620	1.1	9.9	241	2133	1.4	171.9				

PERFORMANCE

EVOX IN-LINE GEARMOTOR

Performance Table

P_1 = 0.37 kW / 0.50 HP

4-POLE MOTORS · **IE3 PREMIUM EFFICIENCY**

50 Hz				60 Hz								
n_2	M_2		S	n_2	M_2		S	i	Size	Stages	IEC Input	Compact EVOX Input
rpm	Nm	lb·in		rpm	Nm	lb·in			CP		BXN	MXN
206.7	17	150	2.9					6.9	**07**	2	71MB	10MB
188.9	19	168	2.7					7.5				
177.6	20	177	2.8					8.0				
154.5	23	204	2.4	188.4	19	168	2.9	9.2				
143.8	25	221	2.2	175.4	20	177	2.7	9.9				
133.6	26	230	2.1	163.0	22	195	2.5	10.6				
123.9	29	257	1.9	151.1	23	204	2.4	11.5				
105.8	33	292	1.6	129.1	27	239	2.0	13.4				
89.3	40	354	1.4	108.9	32	283	1.7	15.9				
77.5	46	407	1.2	94.6	37	327	1.5	18.3	**07**	3	71MB	10MB
67.7	52	460	1.1	82.5	43	381	1.3	21.0				
63.1	56	496	1.0	76.9	46	407	1.2	22.5				
				66.5	53	469	1.0	26.0				
				61.7	57	504	1.0	28.1				
102.5	34	301	2.9					13.8	**17**	2	71MB	10MB
89.6	39	345	2.5					15.8				
83.5	42	372	2.4	101.9	35	310	2.9	17.0				
72.0	49	434	2.0	87.8	40	354	2.5	19.7				
61.3	58	513	1.7	74.8	47	416	2.1	23.2				
56.2	63	558	1.6	68.6	51	451	1.9	25.2				
52.1	68	602	1.5	63.5	56	496	1.8	27.2	**17**	3	71MB	10MB
45.4	78	690	1.3	55.4	64	566	1.6	31.3				
39.4	90	797	1.1	48.0	74	655	1.4	36.0				
36.6	97	859	1.0	44.6	79	699	1.3	38.8				
33.9	104	920	1.0	41.4	85	752	1.2	41.8				
				35.5	99	876	1.0	48.7				
				33.0	107	947	0.9	52.4				
47.3	75	664	2.7					30.0	**37**	3	71MB	10MB
41.9	84	743	2.4	51.2	69	611	2.9	33.8				
37.0	95	841	2.1	45.1	78	690	2.6	38.3				
34.7	102	903	2.0	42.3	84	743	2.4	40.9				
30.3	117	1036	1.7	37.0	96	850	2.1	46.8				
28.3	125	1106	1.6	34.5	102	903	2.0	50.2				
26.5	133	1177	1.5	32.3	109	965	1.8	53.6				
24.4	145	1283	1.4	29.7	119	1053	1.7	58.2				
23.5	150	1328	1.3	28.6	123	1089	1.6	60.4				
20.7	170	1505	1.2	25.3	140	1239	1.4	68.5				
19.4	182	1611	1.1	23.7	149	1319	1.3	73.1				
17.0	208	1841	1.0	20.7	171	1513	1.2	83.6				
				19.3	183	1620	1.1	89.7				
				16.6	212	1876	0.9	104.0				

P_1 = **0.37 kW / 0.50 HP**

4-POLE MOTORS · **IE3 PREMIUM EFFICIENCY**

50 Hz				60 Hz							
n_2	M_2		S	n_2	M_2		S	i	Size	Stages	IEC Input	Compact EVOX Input
rpm	Nm	lb·in		rpm	Nm	lb·in			CP		BXN	MXN
33.7	105	929	3.0					42.1	**47**	3	71MB	10MB
29.6	119	1053	2.8					47.9				
27.7	128	1133	2.6					51.3				
25.6	138	1221	2.2	31.2	113	1000	2.7	55.4				
23.4	151	1336	2.2	28.5	124	1097	2.7	60.8				
19.8	178	1575	1.9	24.2	146	1292	2.3	71.6				
17.7	200	1770	1.7	21.6	164	1452	2.0	80.2				
15.7	225	1991	1.5	19.2	184	1629	1.8	90.4				
14.8	239	2115	1.4	18.0	196	1735	1.7	96.1				
13.0	272	2407	1.2	15.8	223	1974	1.5	109.4				
12.1	291	2576	1.1	14.8	239	2115	1.4	117.1				
10.5	336	2974	1.0	12.8	276	2443	1.2	135.1				
				11.0	323	2859	1.0	158.0				
				10.1	351	3107	1.0	171.9				

P_1 = **0.55 kW / 0.75 HP**

4-POLE MOTORS · **IE3 PREMIUM EFFICIENCY**

50 Hz				60 Hz							
n_2	M_2		S	n_2	M_2		S	i	Size	Stages	IEC Input	Compact EVOX Input
rpm	Nm	lb·in		rpm	Nm	lb·in			CP		BXN	MXN
191.7	27	239	2.9					7.6	**17**	2	80MA	20MA
169.6	31	274	2.9					8.5				
142.6	37	327	2.6					10.2				
126.4	42	372	2.4	153.3	34	301	2.9	11.5				
111.5	47	416	2.1	135.2	39	345	2.6	13.0				
104.6	50	443	2.0	126.8	41	363	2.4	13.8				
91.4	57	504	1.7	110.8	47	416	2.1	15.8				
85.2	62	549	1.6	103.3	51	451	2.0	17.0				
53.1	99	876	1.0	64.4	82	726	1.2	27.2	**17**	3	80MA	20MA
				56.2	94	832	1.1	31.3				
				48.7	108	956	0.9	36.0				
75.1	70	620	2.9					19.3	**37**	2	80MA	20MA
48.2	109	965	1.8	58.5	90	797	2.2	30.0	**37**	3	80MA	20MA
42.8	123	1089	1.6	51.9	101	894	2.0	33.8				
37.7	139	1230	1.4	45.8	115	1018	1.7	38.3				
35.4	148	1310	1.3	42.9	122	1080	1.6	40.9				
30.9	170	1505	1.2	37.5	140	1239	1.4	46.8				
28.8	182	1611	1.1	35.0	150	1328	1.3	50.2				
27.0	194	1717	1.0	32.8	160	1416	1.2	53.6				

PERFORMANCE

EVOX IN-LINE GEARMOTOR

Performance Table

P_1 = 0.55 kW / 0.75 HP

4-POLE MOTORS · **IE3 PREMIUM EFFICIENCY**

50 Hz				60 Hz								
n_2	M_2		S	n_2	M_2		S	i	Size	Stages	IEC Input	Compact EVOX Input
rpm	Nm	lb·in		rpm	Nm	lb·in			CP		BXN	MXN
23.9	219	1938	0.9	29.0	181	1602	1.1	60.4				
				25.6	205	1814	1.0	68.5				
				24.0	219	1938	0.9	73.1				
54.3	97	859	3.0					26.6	**47**	3	80MA	20MA
46.1	114	1009	2.7					31.4				
41.2	128	1133	2.4	49.9	105	929	2.9	35.2				
36.5	144	1275	2.2	44.3	119	1053	2.6	39.6				
34.3	153	1354	2.0	41.7	126	1115	2.5	42.1				
30.2	174	1540	1.9	36.6	143	1266	2.3	47.9				
28.2	186	1646	1.8	34.2	154	1363	2.2	51.3				
26.1	201	1779	1.5	31.7	166	1469	1.9	55.4				
23.8	221	1956	1.5	28.9	182	1611	1.8	60.8				
20.2	260	2301	1.3	24.5	214	1894	1.6	71.6				
18.0	291	2576	1.2	21.9	240	2124	1.4	80.2				
16.0	328	2903	1.0	19.4	270	2390	1.2	90.4				
15.1	349	3089	1.0	18.3	288	2549	1.2	96.1				
				16.0	327	2894	1.0	109.4				
				15.0	350	3098	1.0	117.1				

P_1 = 0.75 kW / 1.0 HP

4-POLE MOTORS · **IE3 PREMIUM EFFICIENCY**

50 Hz				60 Hz								
n_2	M_2		S	n_2	M_2		S	i	Size	Stages	IEC Input	Compact EVOX Input
rpm	Nm	lb·in		rpm	Nm	lb·in			CP		BXN	MXN
321.7	22	195	2.9					4.5	**17**	2	80MB	20MB
285.1	25	221	2.8					5.1				
251.9	28	248	2.6					5.8				
235.9	30	266	2.5	285.7	25	221	3.0	6.2				
206.1	35	310	2.3	249.6	29	257	2.8	7.0				
192.2	37	327	2.1	232.7	31	274	2.6	7.6				
170.1	42	372	2.1	206.0	35	310	2.6	8.5				
143.0	50	443	1.9	173.1	41	363	2.3	10.2				
126.7	57	504	1.8	153.4	47	416	2.1	11.5				
111.8	64	566	1.6	135.4	53	469	1.9	13.0				
104.8	68	602	1.5	127.0	56	496	1.8	13.8				
91.6	78	690	1.3	110.9	65	575	1.5	15.8				
85.4	84	743	1.2	103.4	69	611	1.4	17.0				

P_1 = **0.75 kW / 1.0 HP**

4-POLE MOTORS · **IE3 PREMIUM EFFICIENCY**

50 Hz				60 Hz								
n_2	M_2		S	n_2	M_2		S	i	Size	Stages	IEC Input	Compact EVOX Input
rpm	Nm	lb·in		rpm	Nm	lb·in			CP		BXN	MXN
				64.5	111	982	0.9	27.2	**17**	3	80MB	20MB
185.3	39	345	3.0					7.8	**37**	2	80MB	20MB
123.2	58	513	3.0					11.8				
109.9	65	575	2.8					13.2				
91.7	78	690	2.5	111.1	64	566	3.0	15.8				
80.6	89	788	2.3	97.6	73	646	2.7	18.0				
75.3	95	841	2.1	91.2	79	699	2.5	19.3				
48.4	148	1310	1.4	58.6	122	1080	1.6	30.0	**37**	3	80MB	20MB
42.9	167	1478	1.2	51.9	138	1221	1.4	33.8				
37.8	189	1673	1.1	45.8	156	1381	1.3	38.3				
35.5	202	1788	1.0	42.9	167	1478	1.2	40.9				
				37.5	191	1690	1.0	46.8				
				35.0	205	1814	1.0	50.2				
				32.8	218	1929	0.9	53.6				
68.2	105	929	3.0					21.3	**47**	2	80MB	20MB
63.9	112	991	2.8					22.7				
59.7	120	1062	2.3	72.3	99	876	2.8	24.3	**47**	3	80MB	20MB
54.5	131	1159	2.2	66.0	109	965	2.7	26.6				
46.3	155	1372	2.0	56.0	128	1133	2.4	31.4				
41.3	174	1540	1.8	50.0	143	1266	2.2	35.2				
36.6	195	1726	1.6	44.4	161	1425	1.9	39.6				
34.4	208	1841	1.5	41.7	172	1522	1.8	42.1				
30.3	237	2098	1.4	36.6	195	1726	1.7	47.9				
28.3	253	2239	1.3	34.2	209	1850	1.6	51.3				
26.2	274	2425	1.1	31.7	226	2000	1.4	55.4				
23.9	300	2655	1.1	28.9	248	2195	1.4	60.8				
20.3	353	3124	0.9	24.5	292	2584	1.1	71.6				
				21.9	327	2894	1.0	80.2				
				19.4	368	3257	0.9	90.4				

PERFORMANCE

EVOX IN-LINE GEARMOTOR

Performance Table

P_1 = 1.1 kW / 1.50 HP

4-POLE MOTORS · **IE3 PREMIUM EFFICIENCY**

50 Hz				60 Hz								
n_2	M_2		S	n_2	M_2		S	i	Size	Stages	IEC Input	Compact EVOX Input
rpm	Nm	lb·in		rpm	Nm	lb·in			CP		BXN	MXN
455.3	23	204	2.9					3.2	**37**	2	90S	25S
339.1	31	274	2.4	410.8	26	230	2.7	4.3				
302.9	35	310	2.9					4.8				
270.1	39	345	2.7					5.4				
225.2	47	416	2.3	272.8	39	345	2.7	6.4				
184.9	57	504	2.0	224.0	47	416	2.3	7.8				
144.8	73	646	2.2	175.4	60	531	2.7	10.0				
122.9	85	752	2.0	148.9	71	628	2.5	11.8				
109.7	96	850	1.9	132.9	79	699	2.3	13.2				
91.5	115	1018	1.7	110.9	95	841	2.0	15.8				
80.4	131	1159	1.5	97.4	108	956	1.9	18.0				
75.2	140	1239	1.4	91.1	115	1018	1.7	19.3				
48.3	218	1929	0.9	58.5	180	1593	1.1	30.0	**37**	3	90S	25S
				51.8	203	1797	1.0	33.8				
227.0	46	407	2.9					6.4	**47**	2	90S	25S
203.7	52	460	2.7					7.1				
181.9	58	513	2.5	220.4	48	425	2.8	8.0				
119.2	88	779	2.8					12.2				
102.1	103	912	2.6					14.2				
91.6	115	1018	2.4	111.0	95	841	2.9	15.8				
81.8	128	1133	2.3	99.1	106	938	2.7	17.7				
77.1	136	1204	2.2	93.4	112	991	2.6	18.8				
68.1	154	1363	2.0	82.5	127	1124	2.4	21.3				
63.8	165	1460	1.9	77.2	136	1204	2.3	22.7				
59.6	176	1558	1.6	72.2	145	1283	1.9	24.3	**47**	3	90S	25S
54.4	193	1708	1.5	65.9	159	1407	1.8	26.6				
46.2	228	2018	1.4	55.9	188	1664	1.7	31.4				
41.2	255	2257	1.2	49.9	211	1867	1.5	35.2				
36.6	287	2540	1.1	44.3	237	2098	1.3	39.6				
34.4	306	2708	1.0	41.6	252	2230	1.2	42.1				
30.2	348	3080	0.9	36.6	287	2540	1.1	47.9				
28.2	372	3292	0.9	34.2	307	2717	1.1	51.3				
				31.6	332	2938	0.9	55.4				
				28.9	364	3222	0.9	60.8				

P_1 = **1.5 kW / 2.00 HP**

4-POLE MOTORS · **IE3 PREMIUM EFFICIENCY**

50 Hz				60 Hz								
n_2	M_2		S	n_2	M_2		S	i	Size	Stages	IEC Input	Compact EVOX Input
rpm	Nm	lb·in		rpm	Nm	lb·in			CP		BXN	MXN
640.4	22	195	2.5	777.8	18	159	2.9	2.3	**37**	2	90L	25L
533.7	27	239	2.3	648.1	22	195	2.6	2.7				
453.1	32	283	2.1	550.3	26	230	2.4	3.2				
423.8	34	301	2.5	514.7	28	248	2.9	3.4				
354.9	40	354	2.3	431.0	33	292	2.6	4.1				
337.5	42	372	1.7	409.8	35	310	2.0	4.3				
301.5	48	425	2.1	366.1	39	345	2.4	4.8				
268.8	53	469	1.9	326.5	44	389	2.2	5.4				
224.1	64	566	1.7	272.2	53	469	2.0	6.4				
184.0	78	690	1.5	223.5	64	566	1.7	7.8				
144.1	99	876	1.6	175.0	82	726	2.0	10.0				
122.3	117	1036	1.5	148.6	96	850	1.8	11.8				
109.2	131	1159	1.4	132.6	108	956	1.7	13.2				
91.1	157	1390	1.2	110.6	129	1142	1.5	15.8				
80.1	179	1584	1.1	97.2	147	1301	1.4	18.0				
74.8	191	1690	1.0	90.9	158	1398	1.3	19.3				
610.6	23	204	2.7					2.4	**47**	2	90L	25L
480.3	30	266	2.4	583.3	25	221	2.7	3.0				
432.7	33	292	2.3	525.5	27	239	2.6	3.3				
373.3	38	336	2.7					3.9				
331.3	43	381	2.6	402.3	36	319	2.9	4.4				
292.9	49	434	2.4	355.7	40	354	2.7	4.9				
263.4	54	478	2.3	319.9	45	398	2.6	5.5				
225.9	63	558	2.1	274.3	52	460	2.4	6.4				
202.7	71	628	1.9	246.1	58	513	2.2	7.1				
181.0	79	699	1.8	219.8	65	575	2.0	8.0				
167.8	85	752	2.5					8.6				
148.9	96	850	2.3	180.8	79	699	2.8	9.7				
131.7	109	965	2.3	160.0	90	797	2.7	10.9				
118.6	121	1071	2.1	144.0	99	876	2.5	12.2				
101.6	141	1248	1.9	123.4	116	1027	2.3	14.2				
91.2	157	1390	1.8	110.8	129	1142	2.1	15.8				
81.4	176	1558	1.6	98.9	145	1283	2.0	17.7				
76.7	187	1655	1.6	93.2	154	1363	1.9	18.8				
67.7	211	1867	1.5	82.3	174	1540	1.8	21.3				
63.5	226	2000	1.4	77.1	186	1646	1.7	22.7				
59.3	241	2133	1.2	72.0	199	1761	1.4	24.3	**47**	3	90L	25L
54.1	265	2345	1.1	65.7	218	1929	1.3	26.6				
45.9	312	2761	1.0	55.8	257	2275	1.2	31.4				
				49.8	288	2549	1.1	35.2				
				44.2	324	2868	1.0	39.6				

PERFORMANCE

EVOX IN-LINE GEARMOTOR

Performance Table

P_1 = **2.2 kW / 3.00 HP**

4-POLE MOTORS · **IE3 PREMIUM EFFICIENCY**

50 Hz				60 Hz								
n_2	M_2		S	n_2	M_2		S	i	Size	Stages	IEC Input	Compact EVOX Input
rpm	Nm	lb·in		rpm	Nm	lb·in			CP		BXN	MXN
617.8	34	301	2.9					2.4	**47**	2	100LA	30LA
486.0	43	381	2.7					3.0				
377.7	56	496	2.7					3.9				
335.2	63	558	2.6					4.4				
296.3	71	628	2.4	358.7	59	522	2.9	4.9				
266.5	79	699	2.3	322.7	65	575	2.8	5.5				
228.5	92	814	2.1	276.6	76	673	2.5	6.4				
205.1	102	903	2.0	248.2	85	752	2.4	7.1				
183.2	115	1018	1.8	221.7	95	841	2.2	8.0				
169.7	124	1097	1.7	205.5	102	903	2.1	8.6				
150.6	139	1230	1.6	182.3	115	1018	2.0	9.7				
133.3	158	1398	1.6	161.3	130	1151	1.9	10.9				
120.0	175	1549	1.4	145.3	145	1283	1.7	12.2				
102.8	204	1806	1.3	124.5	169	1496	1.6	14.2				
92.3	228	2018	1.2	111.7	188	1496	1.5	15.8				
82.4	255	2257	1.1	99.7	211	1664	1.4	17.7				
				72.7	289	1868	1.0	24.3	**47**	3	100LA	30LA
				66.3	317	2805	0.9	26.6				

P_1 = **3.0 kW / 4.0 HP**

4-POLE MOTORS · **IE3 PREMIUM EFFICIENCY**

50 Hz				60 Hz								
n_2	M_2		S	n_2	M_2		S	i	Size	Stages	IEC Input	Compact EVOX Input
rpm	Nm	lb·in		rpm	Nm	lb·in			CP		BXN	MXN
615.3	47	416	2.1	746.2	38	336	2.5	2.4	**47**	2	100LB	30LB
484.0	59	522	1.9	587.0	49	434	2.4	3.0				
436.0	66	584	2.2	528.8	54	478	2.3	3.3				
376.2	76	673	2.0	456.2	63	558	2.4	3.9				
333.8	86	761	1.9	404.8	71	628	2.3	4.4				
295.1	97	859	1.8	357.9	80	708	2.1	4.9				
265.4	108	956	1.7	321.9	89	788	2.0	5.5				
227.6	126	1115	1.5	276.0	104	920	1.8	6.4				
204.2	140	1239	1.4	247.7	116	1027	1.7	7.1				
182.4	157	1390	1.3	221.2	129	1142	1.6	8.0				
169.0	169	1496	1.3	205.0	140	1239	1.5	8.6				
150.0	191	1690	1.2	181.9	157	1390	1.4	9.7				
132.7	216	1912	1.1	161.0	178	1575	1.4	10.9				
119.5	240	2124	1.0	144.9	198	1752	1.3	12.2				
102.4	280	2478	0.9	124.2	231	2045	1.1	14.2				
				111.5	257	2275	1.1	15.8				
				99.5	288	2549	1.0	17.7				

PERFORMANCE

EVOX IN-LINE GEARMOTOR

Performance Table

P_1 = **4.0 kW / 5.5 HP**

4-POLE MOTORS · **IE3 PREMIUM EFFICIENCY**

50 Hz				60 Hz								
n_2	M_2		S	n_2	M_2		S	i	Size	Stages	IEC Input	Compact EVOX Input
rpm	Nm	lb·in		rpm	Nm	lb·in			CP		BXN	MXN
615.7	62	549	1.6	746.6	47	416	2.1	2.4	**47**	2	112M	35M
484.3	79	699	1.5	587.3	60	531	1.9	3.0				
436.3	88	779	1.7	529.1	67	593	1.9	3.3				
376.4	101	894	1.5	456.5	77	682	2.0	3.9				
334.0	114	1009	1.4	405.1	87	770	1.8	4.4				
295.3	129	1142	1.3	358.1	99	876	1.7	4.9				
265.6	144	1275	1.3	322.1	110	974	1.6	5.5				
227.7	168	1487	1.1	276.2	128	1133	1.5	6.4				
204.4	187	1655	1.1	247.8	143	1266	1.4	7.1				
182.5	209	1850	1.0	221.4	160	1416	1.3	8.0				
169.2	226	2000	1.0	205.1	172	1522	1.2	8.6				
				182.0	194	1717	1.2	9.7				
				161.1	219	1938	1.1	10.9				
				145.0	244	2160	1.0	12.2				
				124.3	284	2514	0.9	14.2				

P_1 = **0.12 kW / 0.16 HP**

4-POLE MOTORS · **IE1 STANDARD EFFICIENCY**

50 Hz				60 Hz							
n_2	M_2		S	n_2	M_2		S	i	Size	Stages	IEC Input	Compact EVOX Input
rpm	Nm	lb·in		rpm	Nm	lb·in			CP			MXN
64.9	19	168	2.9					21.0	**07**	3		05MA
60.5	20	177	2.7					22.5				
52.3	23	204	2.3					26.0				
48.5	25	221	2.2	60.0	19	168	2.9	28.1				
41.5	30	266	1.9	51.2	22	195	2.5	32.9				
35.0	35	310	1.6	43.3	26	230	2.1	38.9				
31.2	39	345	1.4	38.6	30	266	1.9	43.6				
29.4	42	372	1.3	36.4	32	283	1.7	46.3				
27.0	45	398	1.2	33.3	34	301	1.6	50.5				
24.6	50	443	1.1	30.5	38	336	1.5	55.3				
35.1	35	310	2.9					38.8	**17**	3		05MA
32.6	38	336	2.7					41.8				
27.9	44	389	2.3					48.7				
26.0	47	416	2.1	32.1	36	319	2.8	52.4				
24.1	51	451	2.0	29.8	38	336	2.6	56.6				
20.6	60	531	1.7	25.4	45	398	2.2	66.2				
17.4	71	628	1.4	21.5	53	469	1.9	78.5				
15.9	77	682	1.3	19.6	58	513	1.7	85.9				
16.3	75	664	2.7					83.6	**37**	3		05MA
15.2	81	717	2.5					89.7				
13.1	94	832	2.1	16.2	71	628	2.8	104.0				
11.2	110	974	1.8	13.8	83	735	2.4	122.1				
10.2	120	1062	1.7	12.6	91	805	2.2	133.2				
10.1	122	1080	2.8					135.1	**47**	3		05MA
8.6	142	1257	2.4					158.0				
7.9	155	1372	2.2	9.8	117	1036	2.9	171.9				

PERFORMANCE

EVOX IN-LINE GEARMOTOR

Performance Table

P_1 = 0.18 kW / 0.25 HP

4-POLE MOTORS · **IE1 STANDARD EFFICIENCY**

50 Hz				60 Hz								
n_2	M_2		S	n_2	M_2		S	i	Size	Stages	IEC Input	Compact EVOX Input
rpm	Nm	lb·in		rpm	Nm	lb·in			CP			MXN
79.0	21	186	2.7					15.9	**07**	2		05MB
68.6	24	212	2.3	90.6	19		2.9	18.3	**07**	3		05MB
59.9	27	239	2.0	79.0	22	195	2.5	21.0				
55.8	29	257	1.9	73.7	23	204	2.4	22.5				
48.3	34	301	1.6	63.7	27	239	2.0	26.0				
44.8	36	319	1.5	59.1	29	257	1.9	28.1				
38.2	43	381	1.3	50.5	34	301	1.6	32.9				
32.3	51	451	1.1	42.6	40	354	1.4	38.9				
28.8	57	505	1.0	38.0	45		1.2	43.6				
27.1	60	531	0.9	35.8	48		1.1	46.3				
				32.8	52		1.1	50.5				
				30.0	57		1.0	55.3				
46.1	35	310	2.8					27.2	**17**	3		05MB
40.2	41	363	2.5					31.3				
34.9	47	416	2.1	46.0	37	327	2.7	36.0				
32.4	50	443	2.0	42.8	40	354	2.5	38.8				
30.0	54	478	1.8	39.7	43	381	2.3	41.8				
25.8	63	558	1.6	34.0	51	451	2.0	48.7				
24.0	68	602	1.5	31.6	54	478	1.8	52.4				
22.2	74	655	1.4	29.3	59	522	1.7	56.6				
19.0	86	761	1.2	25.0	69	611	1.5	66.2				
16.0	102	903	1.0	21.1	81	717	1.2	78.5				
				19.3	89	788	1.1	85.9				
23.4	70	620	2.9					53.6	**37**	3		05MB
21.6	76	673	2.6					58.2				
20.8	79	699	2.5					60.4				
18.3	89	788	2.2	24.2	71	628	2.8	68.5				
17.2	95	841	2.1	22.7	76	673	2.6	73.1				
15.0	109	965	1.8	19.8	87	770	2.3	83.6				
14.0	117	1036	1.7	18.5	93	823	2.2	89.7				
12.1	135	1195	1.5	15.9	108	956	1.9	104.0				
10.3	159	1407	1.3	13.6	127	1124	1.6	122.1				
9.4	173	1531	1.2	12.5	138	1221	1.4	133.2				
13.9	117	1036	2.9					90.4	**47**	3		05MB
13.1	125	1106	2.7					96.1				
11.5	142	1257	2.4	15.2	113	1000	3.0	109.4				
10.7	152	1345	2.2	14.2	121	1071	2.8	117.1				
9.3	176	1558	1.9	12.3	140	1239	2.4	135.1				
7.9	205	1814	1.6	10.5	164	1452	2.0	158.0				
7.3	223	1974	1.5	9.6	178	1575	1.9	171.9				

P_1 = **0.25 kW / 0.33 HP**

4-POLE MOTORS · **IE1 STANDARD EFFICIENCY**

50 Hz				60 Hz							
n_2	M_2		S	n_2	M_2		S	i	Size	Stages	IEC Input	Compact EVOX Input
rpm	Nm	lb·in		rpm	Nm	lb·in			CP			MXN
124.0	19	168	2.9					10.6	**07**	2		05MC
115.0	21	186	2.6					11.5				
98.2	24	212	2.3	124.7	19	168	2.9	13.4				
82.9	29	257	1.9	105.2	23	204	2.4	15.9				
72.0	33	292	1.7	91.4	26	230	2.1	18.3	**07**	3		05MC
62.8	38	336	1.4	79.7	30	266	1.8	21.0				
58.5	41	363	1.3	74.3	32	283	1.7	22.5				
50.6	47	416	1.2	64.2	37	327	1.5	26.0				
46.9	51	451	1.1	59.6	40	354	1.4	28.1				
40.1	60	531	0.9	50.9	47	416	1.2	32.9				
				42.9	56	496	1.0	38.9				
66.8	36	319	2.8					19.7	**17**	2		05MC
56.9	42	372	2.4					23.2				
52.2	46	407	2.2	66.3	36	319	2.8	25.2				
48.3	49	434	2.0	61.4	39	345	2.6	27.2	**17**	3		05MC
42.1	57	504	1.8	53.5	45	398	2.2	31.3				
36.6	65	575	1.5	46.4	51	451	1.9	36.0				
34.0	70	620	1.4	43.1	55	487	1.8	38.8				
31.5	76	673	1.3	40.0	60	531	1.7	41.8				
27.0	88	779	1.1	34.3	70	620	1.4	48.7				
25.1	95	841	1.1	31.9	75	664	1.3	52.4				
23.3	103	912	1.0	29.6	81	717	1.2	56.6				
				25.3	95	841	1.1	66.2				
34.4	69	611	2.9					38.3	**37**	3		05MC
32.2	74	655	2.7					40.9				
28.1	85	752	2.4	35.7	67	593	3.0	46.8				
26.2	91	805	2.2	33.3	72	637	2.8	50.2				
24.6	97	859	2.1	31.2	76	673	2.6	53.6				
22.6	106	938	1.9	28.7	83	735	2.4	58.2				
21.8	110	974	1.8	27.7	86	761	2.3	60.4				
19.2	124	1097	1.6	24.4	98	867	2.0	68.5				
18.0	132	1168	1.5	22.9	104	920	1.9	73.1				
15.8	151	1336	1.3	20.0	119	1053	1.7	83.6				
14.7	163	1443	1.2	18.6	128	1133	1.6	89.7				
12.7	189	1673	1.1	16.1	148	1310	1.3	104.0				
10.8	221	1956	0.9	13.7	174	1540	1.1	122.1				
				12.6	190	1682	1.1	133.2				
18.4	130	1151	2.6					71.6	**47**	3		05MC
16.4	145	1283	2.3	20.8	115	1018	2.9	80.2				
14.6	164	1452	2.0	18.5	129	1142	2.6	90.4				

PERFORMANCE

EVOX IN-LINE GEARMOTOR

Performance Table

P_1 = 0.25 kW / 0.33 HP

4-POLE MOTORS · **IE1 STANDARD EFFICIENCY**

50 Hz				60 Hz								
n_2	M_2		S	n_2	M_2		S	i	Size	Stages	IEC Input	Compact EVOX Input
rpm	Nm	lb·in		rpm	Nm	lb·in			CP			MXN
13.7	174	1540	1.9	17.4	137	1213	2.4	96.1				
12.0	198	1752	1.7	15.3	156	1381	2.1	109.4				
11.3	212	1876	1.6	14.3	167	1478	2.0	117.1				
9.7	245	2168	1.4	12.4	193	1708	1.7	135.1				
8.3	286	2531	1.2	10.6	226	2000	1.5	158.0				
7.7	312	2761	1.1	9.7	245	2168	1.4	171.9				
129.4	18	159	3.0					10.6	**07**	2		10MA
120.0	20	177	2.8					11.5				
102.5	23	204	2.4	126.5	19	168	2.9	13.4				
86.5	28	248	2.0	106.7	22	195	2.5	15.9				
75.1	32	283	1.7	92.7	26	230	2.1	18.3	**07**	3		10MA
65.6	36	319	1.5	80.9	30	266	1.9	21.0				
61.1	39	345	1.4	75.4	32	283	1.7	22.5				
52.8	45	398	1.2	65.2	37	327	1.5	26.0				
49.0	49	434	1.1	60.4	40	354	1.4	28.1				
41.8	57	504	1.0	51.6	46	407	1.2	32.9				
				43.6	55	487	1.0	38.9				
69.8	34	301	2.9					19.7	**17**	2		10MA
59.4	40	354	2.5					23.2				
54.5	44	389	2.3	67.2	36	319	2.8	25.2				
50.5	47	416	2.1	62.3	38	336	2.6	27.2	**17**	3		10MA
44.0	54	478	1.8	54.3	44	389	2.3	31.3				
38.2	63	558	1.6	47.1	51	451	2.0	36.0				
35.5	67	593	1.5	43.7	55	487	1.8	38.8				
32.9	73	646	1.4	40.6	59	522	1.7	41.8				
28.2	85	752	1.2	34.8	69	611	1.5	48.7				
26.2	91	805	1.1	32.3	74	655	1.4	52.4				
24.3	98	867	1.0	30.0	80	708	1.3	56.6				
				25.6	93	823	1.1	66.2				
				21.6	110	974	0.9	78.5				
35.9	67	593	3.0					38.3	**37**	3		10MA
33.6	71	628	2.8					40.9				
29.4	81	717	2.5					46.8				
27.4	87	770	2.3	33.8	71	628	2.8	50.2				
25.7	93	823	2.2	31.7	75	664	2.7	53.6				
23.6	101	894	2.0	29.1	82	726	2.4	58.2				
22.8	105	929	1.9	28.1	85	752	2.4	60.4				
20.1	119	1053	1.7	24.8	96	850	2.1	68.5				
18.8	127	1124	1.6	23.2	103	912	1.9	73.1				
16.5	145	1283	1.4	20.3	118	1044	1.7	83.6				

P_1 = **0.25 kW / 0.33 HP**

4-POLE MOTORS · **IE1 STANDARD EFFICIENCY**

50 Hz				60 Hz								
n_2	M_2		S	n_2	M_2		S	i	Size	Stages	IEC Input	Compact EVOX Input
rpm	Nm	lb·in		rpm	Nm	lb·in			CP			MXN
15.3	156	1381	1.3	18.9	126	1115	1.6	89.7				
13.2	181	1602	1.1	16.3	146	1292	1.4	104.0				
11.3	212	1876	0.9	13.9	172	1522	1.2	122.1				
				12.7	187	1655	1.1	133.2				
19.2	124	1097	2.7					71.6	**47**	3		10MA
17.1	139	1230	2.4	21.1	113	1000	3.0	80.2				
15.2	157	1390	2.1	18.8	127	1124	2.6	90.4				
14.3	167	1478	2.0	17.6	135	1195	2.5	96.1				
12.6	190	1682	1.8	15.5	154	1363	2.2	109.4				
11.7	203	1797	1.6	14.5	165	1460	2.0	117.1				
10.2	235	2080	1.4	12.6	190	1682	1.8	135.1				
8.7	274	2425	1.2	10.7	222	1965	1.5	158.0				
8.0	298	2638	1.1	9.9	242	2142	1.4	171.9				

P_1 = **0.37 kW / 0.50 HP**

4-POLE MOTORS · **IE1 STANDARD EFFICIENCY**

50 Hz				60 Hz								
n_2	M_2		S	n_2	M_2		S	i	Size	Stages	IEC Input	Compact EVOX Input
rpm	Nm	lb·in		rpm	Nm	lb·in			CP			MXN
199.3	18	159	2.8					6.9	**07**	2		10MB
182.1	19	168	2.6					7.5				
171.2	21	186	2.7					8.0				
148.9	24	212	2.3	184.4	19	168	2.9	9.2				
138.6	25	221	2.2	171.6	21	186	2.7	9.9				
128.8	27	239	2.0	159.5	22	195	2.5	10.6				
119.4	30	266	1.9	147.9	24	212	2.3	11.5				
102.0	35	310	1.6	126.3	28	248	2.0	13.4				
86.1	41	363	1.3	106.6	33	292	1.7	15.9				
74.8	47	416	1.2	92.6	38	336	1.4	18.3	**07**	3		10MB
65.2	54	478	1.0	80.8	44	389	1.3	21.0				
60.8	58	513	0.9	75.3	47	416	1.2	22.5				
				65.1	54	478	1.0	26.0				
				60.4	59	522	0.9	28.1				
105.4	34	301	3.0					13.0	**17**	2		10MB
98.8	36	319	2.8					13.8				
86.4	41	363	2.4					15.8				
80.5	44	389	2.3	99.7	35	310	2.8	17.0				

PERFORMANCE

EVOX IN-LINE GEARMOTOR

Performance Table

P_1 = 0.37 kW / 0.50 HP

4-POLE MOTORS · **IE1 STANDARD EFFICIENCY**

50 Hz				60 Hz								
n_2	M_2		S	n_2	M_2		S	i	Size	Stages	IEC Input	Compact EVOX Input
rpm	Nm	lb·in		rpm	Nm	lb·in			CP			MXN
69.4	51	451	2.0	85.9	41	363	2.4	19.7				
59.1	60	531	1.7	73.2	48	425	2.1	23.2				
54.2	65	575	1.5	67.1	53	469	1.9	25.2				
50.2	70	620	1.4	62.2	57	504	1.8	27.2	**17**	3		10MB
43.8	81	717	1.2	54.2	65	575	1.5	31.3				
38.0	93	823	1.1	47.0	75	664	1.3	36.0				
35.3	100	885	1.0	43.7	81	717	1.2	38.8				
32.7	108	956	0.9	40.5	87	770	1.1	41.8				
				34.8	102	903	1.0	48.7				
				32.3	109	965	0.9	52.4				
52.6	67	593	3.0					26.0	**37**	2		10MB
45.6	77	682	2.6					30.0	**37**	3		10MB
40.4	87	770	2.3	50.1	71	628	2.8	33.8				
35.7	99	876	2.0	44.2	80	708	2.5	38.3				
33.4	106	938	1.9	41.4	85	752	2.3	40.9				
29.2	121	1071	1.7	36.2	98	867	2.0	46.8				
27.2	130	1151	1.5	33.7	105	929	1.9	50.2				
25.5	138	1221	1.4	31.6	112	991	1.8	53.6				
23.5	150	1328	1.3	29.1	121	1071	1.6	58.2				
22.6	156	1381	1.3	28.0	126	1115	1.6	60.4				
20.0	177	1567	1.1	24.7	143	1266	1.4	68.5				
18.7	189	1673	1.1	23.2	152	1345	1.3	73.1				
16.4	216	1912	0.9	20.3	174	1540	1.1	83.6				
				18.9	187	1655	1.1	89.7				
				16.3	217	1921	0.9	104.0				
32.5	109	965	2.8					42.1	**47**	3		10MB
28.5	124	1097	2.7					47.9				
26.7	132	1168	2.5					51.3				
24.7	143	1266	2.2	30.6	116	1027	2.7	55.4				
22.5	157	1390	2.1	27.9	127	1124	2.6	60.8				
19.1	185	1637	1.8	23.7	149	1319	2.2	71.6				
17.1	207	1832	1.6	21.1	167	1478	2.0	80.2				
15.1	233	2062	1.4	18.7	188	1664	1.8	90.4				
14.2	248	2195	1.3	17.6	201	1779	1.7	96.1				
12.5	283	2505	1.2	15.5	228	2018	1.5	109.4				
11.7	302	2673	1.1	14.5	244	2160	1.4	117.1				
10.1	349	3089	1.0	12.5	282	2496	1.2	135.1				
				10.7	330	2921	1.0	158.0				
				9.9	359	3177	0.9	171.9				

P_1 = **0.55 kW / 0.75 HP**

4-POLE MOTORS · **IE1 STANDARD EFFICIENCY**

50 Hz				60 Hz								
n_2	M_2		S	n_2	M_2		S	i	Size	Stages	IEC Input	Compact EVOX Input
rpm	Nm	lb·in		rpm	Nm	lb·in			CP			MXN
422.0	12	106	3.0					3.2	**07**	2		10MC
394.2	13	115	3.0					3.5				
342.8	15	133	2.6					4.0				
296.4	18	159	2.5					4.6				
274.9	19	168	2.4	341.4	15	133	2.9	5.0				
234.8	22	195	2.2	291.6	18	159	2.8	5.8				
198.1	27	239	1.9	246.1	21	186	2.3	6.9				
181.0	29	257	1.8	224.8	23	204	2.2	7.5				
170.2	31	274	1.8	211.4	25	221	2.2	8.0				
148.1	35	310	1.6	183.9	29	257	1.9	9.2				
137.8	38	336	1.4	171.1	31	274	1.8	9.9				
128.0	41	363	1.3	159.0	33	292	1.7	10.6				
118.7	44	389	1.2	147.5	36	319	1.5	11.5				
101.4	52	460	1.1	125.9	42	372	1.3	13.4				
				106.3	49	434	1.1	15.9				
				92.3	57	478	1.0	18.3	**07**	3		10MC
193.2	27	239	2.9					7.0	**17**	2		10MC
180.1	29	257	2.7					7.6				
159.4	33	292	2.7					8.5				
134.0	39	345	2.4	166.4	32	283	3.0	10.2				
118.8	44	389	2.3	147.5	36	319	2.8	11.5				
104.8	50	443	2.0	130.1	40	354	2.5	13.0				
98.3	53	469	1.9	122.0	43	381	2.3	13.8				
85.9	61	540	1.6	106.6	49	434	2.0	15.8				
80.0	66	584	1.5	99.4	53	469	1.9	17.0				
69.0	76	673	1.3	85.7	61	540	1.6	19.7				
58.7	89	788	1.1	73.0	72	637	1.4	23.2				
53.9	97	859	1.0	66.9	78	690	1.3	25.2				
49.9	105	929	1.0	62.0	85	752	1.2	27.2	**17**	3		10MC
				54.0	97	859	1.0	31.3				
173.7	30	266	2.9					7.8	**37**	2		10MC
150.6	35	310	2.6	187.0	28	248	3.0	9.0				
128.8	41	363	2.3	159.9	33	292	2.7	10.6				
75.6	70	620	2.9					18.0				
70.6	74	655	2.7					19.3				
61.2	86	761	2.3	75.9	69	611	2.9	22.2				
52.3	100	885	2.0	65.0	81	717	2.5	26.0				
45.3	116	1027	1.7	56.3	93	823	2.1	30.0				
40.2	131	1159	1.5	49.9	105	929	1.9	33.8				
35.5	148	1310	1.4	44.1	119	1053	1.7	38.3				

PERFORMANCE

EVOX IN-LINE GEARMOTOR

Performance Table

P_1 = 0.55 kW / 0.75 HP

4-POLE MOTORS · **IE1 STANDARD EFFICIENCY**

50 Hz				60 Hz								
n_2	M_2		S	n_2	M_2		S	i	Size	Stages	IEC Input	Compact EVOX Input
rpm	Nm	lb·in		rpm	Nm	lb·in			CP			MXN
33.2	158	1398	1.3	41.3	127	1124	1.6	40.9				
29.1	181	1602	1.1	36.1	146	1292	1.4	46.8				
27.1	194	1717	1.0	33.6	156	1381	1.3	50.2				
25.4	207	1832	1.0	31.5	167	1478	1.2	53.6				
				29.0	181	1602	1.1	58.2				
				27.9	188	1664	1.1	60.4				
				24.7	213	1885	0.9	68.5				
59.9	88	779	2.9					22.7	**47**	2		10MC
52.1	101	894	2.6	64.7	81	717	3.0	26.1				
44.8	117	1036	2.3	55.6	94	832	2.7	30.4				
41.2	127	1124	2.1	51.2	103	912	2.5	33.0				
56.0	94	832	3.0					24.3	**47**	3		10MC
51.1	103	912	2.8					26.6				
43.4	121	1071	2.6					31.4				
38.7	136	1204	2.3	48.0	109	965	2.8	35.2				
34.3	153	1354	2.0	42.7	123	1089	2.5	39.6				
32.3	163	1443	1.9	40.1	131	1159	2.4	42.1				
28.4	185	1637	1.8	35.2	149	1319	2.2	47.9				
26.5	198	1752	1.7	32.9	160	1416	2.1	51.3				
24.5	214	1894	1.4	30.5	172	1522	1.8	55.4				
22.4	235	2080	1.4	27.8	189	1673	1.8	60.8				
19.0	276	2443	1.2	23.6	223	1974	1.5	71.6				
17.0	310	2744	1.1	21.1	249	2204	1.3	80.2				
15.1	349	3089	1.0	18.7	281	2487	1.2	90.4				
14.1	371	3284	0.9	17.6	299	2646	1.1	96.1				
				15.4	340	3009	1.0	109.4				
				14.4	364	3222	0.9	117.1				

PERFORMANCE

EVOX IN-LINE GEAR UNIT

Tables introduction

The following tables show geometrically possible combinations between gear ratios and inputs for each gear unit size.

For each of these combinations, a possible service factor has been calculated using the maximum motor power that can be coupled in Bonfiglioli's asynchronous electric motors portfolio (considering different poles and efficiency levels).

In the table, combinations with a service factor below 0.9 are highlighted with a lighter colour. Here you should pay attention to the power of the electric motor coupled with the gear unit, because it shouldn't exceed the "Maximum input power" shown.

The left table section shows the inputs that are geometrically compatible with each gear ratio by IEC, NEMA and solid input shaft. For further information on the input interface, see the Dimension section of this document.

Gear unit size

Rated output torque [Service factor =1]

Input speed

Output speed gear unit performance data are calculated at 1400 rpm.

Max input power [@ 1400rpm input & service factor =1]

Nominal output torque

NEMA motor adapters size

IEC motor adapters size

EVOX CP17

... Nm

	i	[n_1=1.400rpm]			[n_1=1.700rpm]			Motor adapters									Solid Shaft
		Mn_2	n_2	Pn_1	Mn_2	n_2	Pn_1	IEC	P56	P63	P71	P80	P90	P100	P112	P132	
		Nm	rpm	kW	lb·in	rpm	HP	NEMA	-	-	N56C	N143TC	N145TC	N182TC	N184TC	N213TC	N215TC	
2 stages	2,4	45	583	2,7	373	708	4,2						•					HS1/ NHS1

Gear ratio

Size of the solid input shaft [Compatible with gear ratio]

Stage no.

Adapter can be coupled

Adapter can be coupled [Input power should not exceed the "Max input power"]

• Adapter can be coupled in NEMA version only. [Input power should not exceed the "Max Input power"]

—— Adapter cannot be coupled

Please, configure N140TC, to have the N143TC or N145TC input flange; or configure N180TC, if you want the N182TC or N184TC; or select N210TC, to have the N213TC or N215TC

PERFORMANCE

EVOX IN-LINE GEAR UNIT

Performance Table

EVOX CP07

55 Nm

	i	[n_1=1,400rpm] Mn_2	n_2	Pn_1	[n_1=1,700rpm] Mn_2	n_2	Pn_1
		Nm	rpm	kW	lb·in	rpm	HP
2 stages	2.8	35	497	1.8	310	603	2.96
	3.2	37	434	1.7	327	527	2.74
	3.5	40	406	1.7	354	493	2.77
	4.0	40	353	1.5	354	428	2.41
	4.6	45	305	1.4	398	371	2.34
	4.9	45	283	1.3	398	344	2.17
	5.8	50	242	1.3	443	293	2.06
	6.9	50	204	1.1	443	248	1.74
	7.5	51	186	1.0	451	226	1.62
	8.0	55	175	1.0	487	213	1.64
	9.2	55	152	0.9	487	185	1.43
	9.9	55	142	0.8	487	172	1.33
	10.6	55	132	0.8	487	160	1.24
	11.5	55	122	0.7	487	148	1.15
	13.4	55	104	0.6	487	127	0.98
	15.9	55	88	0.5	487	107	0.83
	18.3	55	77	0.4	487	93	0.72
3 stages	21.0	55	67	0.4	487	81	0.63
	22.5	55	62	0.4	487	76	0.58
	26.0	55	54	0.3	487	65	0.50
	28.1	55	50	0.3	487	61	0.47
	32.9	55	43	0.2	487	52	0.40
	38.9	55	36	0.2	487	44	0.34
	43.6	55	32	0.2	487	39	0.30
	46.3	55	30	0.2	487	37	0.28
	50.5	55	28	0.2	487	34	0.26
	55.3	55	25	0.1	487	31	0.24

	Motor adapters								Solid Shaft
IEC	P56	P63	P71	P80	P90	P100	P112	P132	
NEMA	-	-	N56C	N143TC	N145TC	N182TC	N184TC	N213TC N215TC	

Adapter can be coupled

Adapter can be coupled [Input power should not exceed the "Max input power"]

Adapter can be coupled in NEMA version only. [Input power should not exceed the "Max Input power"]

Adapter cannot be coupled

Please, configure N140TC, to have the N143TC or N145TC input flange; or configure N180TC, if you want the N182TC or N184TC; or select N210TC, to have the N213TC or N215TC

EVOX CP17

100 Nm

	i	[n_1=1,400rpm] Mn_2	n_2	Pn_1	[n_1=1,700rpm] Mn_2	n_2	Pn_1	IEC	P56	P63	P71	P80	P90	P100	P112	P132	Solid Shaft
		Nm	rpm	kW	lb·in	rpm	HP	NEMA	-	-	N56C	N143TC	N145TC	N182TC	N184TC	N213TC N215TC	
2 stages	2.4	45	583	2.7	373	708	4.2						•				HS1/ NHS1
	2.9	50	483	2.5	415	586	3.9						•				
	3.3	55	428	2.5	456	520	3.8						•				
	3.8	60	369	2.3	498	449	3.5						•				
	4.5	65	310	2.1	539	377	3.2						•				
	5.1	70	275	2.0	581	334	3.1						•				
	5.8	75	243	1.9	622	295	2.9						•				
	6.2	75	228	1.8	622	276	2.7						•				
	7.0	80	199	1.7	664	241	2.5						•				
	7.6	80	185	1.6	664	225	2.4						•				
	8.5	90	164	1.5	747	199	2.4						•				
	10.2	95	138	1.4	788	167	2.1						•				
	11.5	100	122	1.3	885	148	2.1						•				
	13.0	100	108	1.1	885	131	1.8						•				
	13.8	100	101	1.1	885	123	1.7						•				
	15.8	100	88	0.9	885	107	1.5						•				
	17.0	100	82	0.9	885	100	1.4						•				
	19.7	100	71	0.7	885	86	1.2										
	23.2	100	60	0.6	885	73	1.0										
	25.2	100	55	0.6	885	67	0.9										
3 stages	27.2	100	51	0.5	885	62	0.9										
	31.3	100	45	0.5	885	54	0.8										
	36.0	100	39	0.4	885	47	0.7										
	38.8	100	36	0.4	885	44	0.6										
	41.8	100	33	0.4	885	41	0.6										
	48.7	100	29	0.3	885	35	0.5										
	52.4	100	27	0.3	885	32	0.5										
	56.6	100	25	0.3	885	30	0.4										
	66.2	100	21	0.2	885	26	0.4										
	78.5	100	18	0.2	885	22	0.3										
	85.9	100	16	0.2	885	20	0.3										

Adapter can be coupled

Adapter can be coupled [Input power should not exceed the "Max input power"]

• Adapter can be coupled in NEMA version only. [Input power should not exceed the "Max Input power"]

Adapter cannot be coupled

Please, configure N140TC, to have the N143TC or N145TC input flange; or configure N180TC, if you want the N182TC or N184TC; or select N210TC, to have the N213TC or N215TC

PERFORMANCE

EVOX IN-LINE GEAR UNIT

Performance Table

EVOX CP37

200 Nm

	i	[n_1=1,400rpm]			[n_1=1,700rpm]				Motor adapters									Solid Shaft
		Mn_2	n_2	Pn_1	Mn_2	n_2	Pn_1	IEC	P56	P63	P71	P80	P90	P100	P112	P132		
		Nm	rpm	kW	lb·in	rpm	HP	NEMA	-	-	N56C	N143TC	N145TC	N182TC	N184TC	N213TC	N215TC	
2 stages	2.3	73	622	4.8	606	756	7.3											HS2/NHS2
	2.7	84	519	4.6	697	630	7.0											
	3.2	94	440	4.3	780	535	6.6											
	3.4	103	412	4.4	854	500	6.8											
	4.1	113	345	4.1	937	419	6.2											
	4.3	110	328	3.8	913	398	5.8											
	4.8	121	293	3.7	1004	356	5.7											
	5.4	127	261	3.5	1054	317	5.3											
	6.4	137	218	3.1	1137	264	4.8											
	7.8	148	179	2.8	1228	217	4.2											
	9.0	156	155	2.5	1294	188	3.9											
	10.0	163	140	2.4	1352	170	3.6											
	10.6	166	133	2.3	1377	161	3.5											
	11.8	174	119	2.2	1444	144	3.3											
	13.2	181	106	2.0	1502	129	3.1											
	15.8	194	88	1.8	1609	107	2.7											
	18.0	200	78	1.6	1770	94	2.7											
	19.3	200	73	1.5	1770	88	2.5											
	22.2	200	63	1.3	1770	76	2.1											
	26.0	200	54	1.1	1770	65	1.8											
3 stages	30.0	200	47	1.0	1770	57	1.6											
	33.8	200	41	0.9	1770	50	1.4											
	38.3	200	37	0.8	1770	44	1.2											
	40.9	200	34	0.7	1770	42	1.2											
	46.8	200	30	0.6	1770	36	1.0											
	50.2	200	28	0.6	1770	34	1.0											HS1/NHS1
	53.6	200	26	0.5	1770	32	0.9											
	58.2	200	24	0.5	1770	29	0.8											
	60.4	200	23	0.5	1770	28	0.8											
	68.5	200	20	0.4	1770	25	0.7											
	73.1	200	19	0.4	1770	23	0.7											
	83.6	200	17	0.4	1770	20	0.6											
	89.7	200	16	0.3	1770	19	0.5											
	104.0	200	13	0.3	1770	16	0.5											
	122.1	200	11	0.2	1770	14	0.4											
	133.2	200	11	0.2	1770	13	0.4											

Adapter can be coupled

Adapter can be coupled [Input power should not exceed the "Max input power"]

Adapter can be coupled in NEMA version only. [Input power should not exceed the "Max Input power"]

Adapter cannot be coupled

Please, configure N140TC, to have the N143TC or N145TC input flange; or configure N180TC, if you want the N182TC or N184TC; or select N210TC, to have the N213TC or N215TC

EVOX CP47

335 Nm

	i	[n_1=1,400rpm] Mn_2	n_2	Pn_1	[n_1=1,700rpm] Mn_2	n_2	Pn_1	IEC	P56	P63	P71	P80	P90	P100	P112	P132	Solid Shaft
		Nm	rpm	kW	lb·in	rpm	HP	NEMA	-	-	N56C	N143TC	N145TC	N182TC	N184TC	N213TC N215TC	
2 stages	2.4	100	593	6.2	830	720	9.5										HS3/NHS3
	3.0	115	467	5.6	954	567	8.6										
	3.3	145	420	6.4	1203	511	9.7										
	3.9	152	363	5.8	1261	440	8.8										
	4.4	160	322	5.4	1327	391	8.2										HS2/NHS2
	4.9	170	285	5.1	1410	346	7.7										
	5.5	180	256	4.8	1493	311	7.4										
	6.4	190	219	4.4	1576	266	6.7										
	7.1	200	197	4.1	1659	239	6.3										
	8.0	210	176	3.9	1742	214	5.9										
	8.6	215	163	3.7	1784	198	5.6										
	9.7	225	145	3.4	1867	176	5.2										
	10.9	245	128	3.3	2033	155	5.0										
	12.2	250	115	3.0	2074	140	4.6										
	14.2	265	99	2.7	2198	120	4.2										
	15.8	278	89	2.6	2306	108	3.9										
	17.7	290	79	2.4	2406	96	3.7										
	18.8	297	75	2.3	2464	91	3.5										
	21.3	310	66	2.1	2744	80	3.5										
	22.7	315	62	2.0	2788	75	3.3										
	26.1	335	54	1.9	2965	65	3.1										
	30.4	335	46	1.6	2965	56	2.6										
	33.0	335	42	1.5	2965	52	2.4										
3 stages	24.3	280	58	1.7	2323	70	2.6										
	26.6	290	53	1.6	2406	64	2.4										
	31.4	310	45	1.4	2572	54	2.2										
	35.2	310	40	1.3	2572	48	2.0										
	39.6	310	35	1.1	2572	43	1.8										
	42.1	310	33	1.1	2572	40	1.6										
	47.9	330	29	1.0	2921	35	1.6										
	51.3	335	27	1.0	2965	33	1.6										
	55.4	310	25	0.8	2744	31	1.3										
	60.8	335	23	0.8	2965	28	1.3										
	71.6	335	20	0.7	2965	24	1.1										
	80.2	335	17	0.6	2965	21	1.0										
	90.4	335	15	0.5	2965	19	0.9										
	96.1	335	15	0.5	2965	18	0.8										
	109.4	335	13	0.4	2965	16	0.7										
	117.1	335	12	0.4	2965	15	0.7										
	135.1	335	10	0.4	2965	13	0.6										
	158.0	335	9	0.3	2965	11	0.5										
	171.9	335	8	0.3	2965	10	0.5										

Adapter can be coupled

Adapter can be coupled [Input power should not exceed the "Max input power"]

Adapter can be coupled in NEMA version only. [Input power should not exceed the "Max Input power"]

Adapter cannot be coupled

Please, configure N140TC, to have the N143TC or N145TC input flange; or configure N180TC, if you want the N182TC or N184TC; or select N210TC, to have the N213TC or N215TC

PERFORMANCE

EVOX IN-LINE OUTPUT RADIAL AND AXIAL LOADS

Tables introduction

Max radial loads are calculated with:

- M_{n2} torque applied on output shaft
- most unfavourable gear unit rotating direction [CW or CCW]
- the applied radial force with the most unfavourable **α** angle, among all gear ratios
- radial load applied in the middle of the output shaft

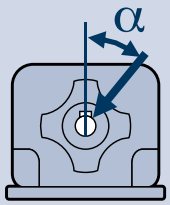

The permitted radial loads can increase considerably when the parameters listed above vary. **contact Bonfiglioli's Technical Service** if your application requires radial loads greater than the values indicated in the tables, because they could be available with a standard gear unit or with a simple option

Axial load values are not dependent on the service factor or output speed, but are referred to pure axial forces applied with inward direction in the gear unit direction. If the force on the output shaft has both radial and axial components or the direction of the force is outgoing from the gear unit, **contact Bonfiglioli's Technical Service**.

• **contact Bonfiglioli's Technical Service**

S Service Factor [M_{n2}/M_2]

M_{n2} Nominal Output Torque

M_2 Gear Unit Output Torque

N_2 Gear Unit Output Speed

		Maximum load with standard output bearings					Maximum load with output reinforced bearings				
	n_2	Radial				Axial	Radial [OHR]				Axial [OHA]
		0.9 ≤ S < 1.25	1.25 ≤ S < 1.4	1.4 ≤ S < 2	2 ≤ S < 3		0.9 ≤ S < 1.25	1.25 ≤ S < 1.4	1.4 ≤ S < 2	2 ≤ S < 3	
	[rpm]	N				N	N				N
CP07	$n_2 < 50$	1,470	1,570	1,840	2,030		1,640	1,750	2,040	2,490	
	$50 \le n_2 < 150$	1,350	1,460	1,600	1,700		1,500	1,620	1,910	2,190	
	$150 \le n_2 < 300$	•	870	1,130	1,310	2370	840	970	1,260	1,700	
	$300 \le n_2 < 500$	•	•	660	1,000		•	450	740	1,190	
	$n_2 \ge 500$	•	•	•	840		•	•	•	940	
CP17	$n_2 < 50$	2,460	2,660	3,100	3,470		3,460	3,500	3,580	3,730	
	$50 \le n_2 < 150$	1,850	2,050	2,470	2,870		3,080	3,120	3,210	3,350	
	$150 \le n_2 < 300$	940	1,140	1,580	2,220	3,270	2,340	2,380	2,470	2,610	
	$300 \le n_2 < 500$	•	•	860	1,540		1,750	1,790	1,880	2,020	
	$n_2 \ge 500$	•	•	•	1,190		1,460	1,500	1,590	1,730	
CP37	$n_2 < 50$	4,110	4,440	5,130	5,430		6,580	6,650	6,810	7,110	
	$50 \le n_2 < 150$	3,110	3,460	4,080	4,330		4,580	4,650	4,810	5,070	
	$150 \le n_2 < 300$	1,530	1,880	2,670	3,340	5,600	3,440	3,510	3,670	3,930	15,000
	$300 \le n_2 < 500$	•	•	1,410	2,560		2,530	2,610	2,770	3,020	
	$n_2 \ge 500$	•	•	•	2,040		2,090	2,160	2,330	2,580	
CP47	$n_2 < 50$	5,240	5,570	6,300	7,450		8,420	8,490	8,650	8,890	
	$50 \le n_2 < 150$	3,460	3,820	4,630	5,830		6,300	6,380	6,550	6,810	
	$150 \le n_2 < 300$	1,780	2,140	2,950	4,210	7,650	4,800	4,880	5,050	5,310	20,000
	$300 \le n_2 < 500$	•	•	1,610	2,890		3,610	3,680	3,850	4,110	
	$n_2 \ge 500$	•	•	•	2,230		3,030	3,100	3,270	3,530	

EVOX GEAR UNIT DIMENSION

IN-LINE GEARMOTOR

P

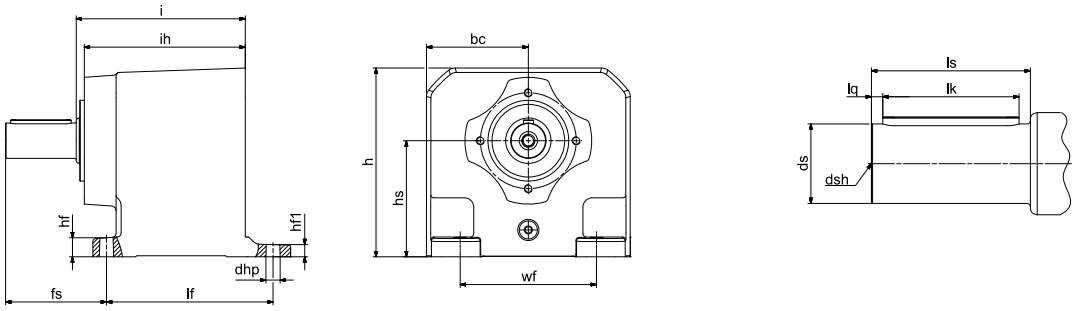

U

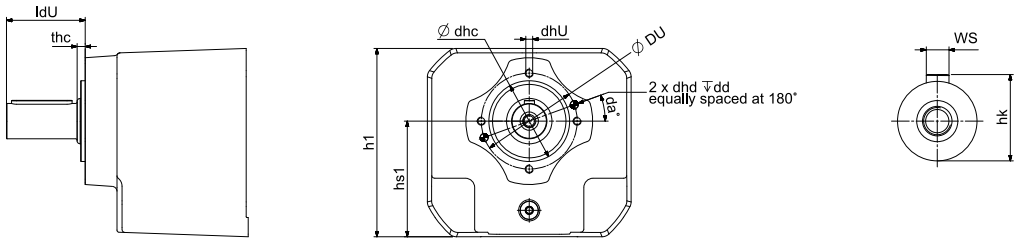

UF

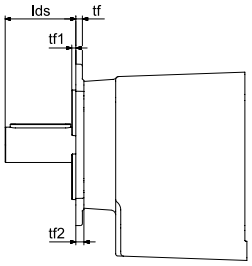

PF

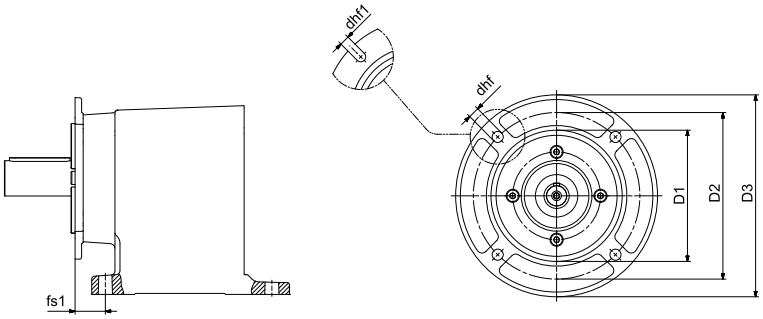

	lf	wf	dhp	Recommended screw	hf	hf1	hs	h	ih	i	bc	h1	hs1	DU	dhU	dhc	dhd	dd	da°	lds	thc	tf	tf1	tf2
CP07	95	85	6.5	M6	11	9	65	107	79	84.5	51.5	107	65	60	M6	50 f7	-	-	-	40	5.5	(*)	3.5	5
CP17	110	110	9	M8	11	11	75	134	98.5	109	70	133.5	74.5	87	M8	70 f7	-	-	-	40	10.5	9.5	3.5	10.5
CP37	130	110	9	M8	15	12	90	145	117.5	130	75	144.5	89.5	87	M8	72 f7	-	-	-	50	12.5	9.5	4	13
CP47	165	135	13.5	M12	16	15	115	189	140	153	91	188.5	114.5	87	M8	72 f7	6 H7	9.5	14	60	13	9.5	4	13

	D1	D2	D3	dhf CP17 - 37 - 47	dhf CP07	(*) tf CP07
F120	80 f7	100	120	ø 6.6	ø 6.6	4,5
F140	95 f7	115	140	ø 9	ø 9	9
F160	110 f7	130	160	ø 9	ø 9	9
F200	130 f7	165	200	ø 11		-
F250	180 f7	215	250	ø 14		-

Metric [Standard output shaft version]

	ds	dhs	ls	lk	lq	ldU	hk	ws	fs	fs1
CP07	20 h6	M6	40	32	4	45.5	22.5	6	48	7.5
CP17	20 h6	M6	40	32	4	50.5	22.5	6	58	18
CP37	25 h6	M10	50	40	5	62.5	28	8	74	24.5
CP47	30 h6	M10	60	50	5	73	33	8	90	30

Imperial [N-output shaft version] - Dimensions expressed in inches

ds	dsh	ls	lk	ldU	hk	ws	fs	fs1
3/4 +0.0000 -0.0005	1/4 -20 UNC	1-9/16	1-3/8	1-3/4	13/16	3/16 +0.0000 -0.0014	1.890	0.295
3/4 +0.0000 -0.0005	1/4 -20 UNC	1-9/16	1-3/8	2.00	13/16	3/16 +0.0000 -0.0014	2.283	0.709
1 +0.0000 -0.0005	3/8 -16 UNC	2	1-9/16	2-1/2	1-1/8	1/4 +0.0000 -0.0014	2.913	0.965
1-1/4 +0.0000 -0.0005	1/2 - 13 UNC	2-3/8	2	2-7/8	1-3/8	1/4 +0.0000 -0.0014	3.543	1.181

If not otherwise specified, dimensions are expressed in mm

EVOX GEAR UNIT DIMENSION

IN-LINE GEARMOTOR

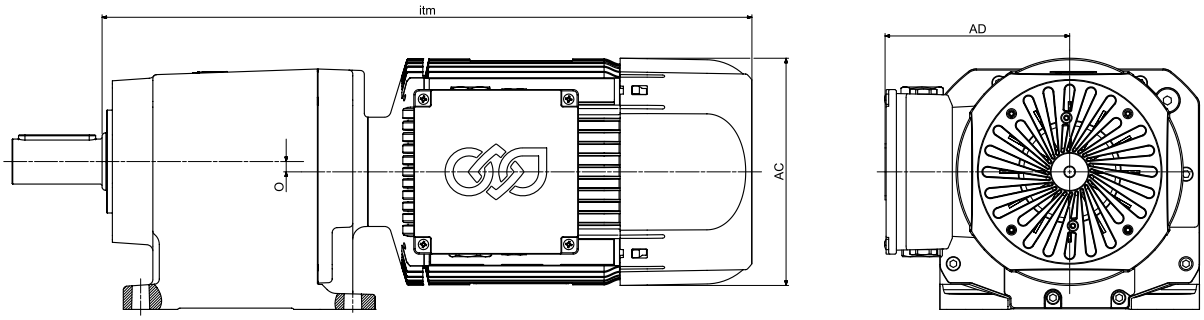

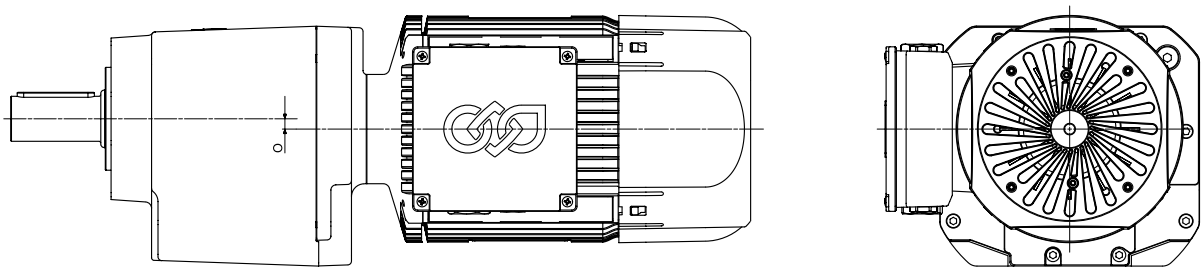

MXN - [Compact IE3/NEMA Premium] & MNN - [Compact IE1/NEMA Standard]

Standard gearmotor with plastic sheet fan cover

Gearbox size	itm			
	Motor size (kW)			
	05MA (0.12) **05MB** (0.18) **05MC** (0.25)	**10MA** (0.25) **10MB** (0.37) **10MC** (0.55)	**20MA** (0.55) **20MB** (0.75)	**25S** (1.1) **25L** (1.5)
CP07	378	382	-	-
CP17	390	394	440	-
CP37	407	411	457	461
CP47	431	435	481	485

Standard gearmotor with metal sheet fan cover - MFC

Gearbox size	itm							
	Motor size (kW)							
	05MA (0.12) **05MB** (0.18) **05MC** (0.25)	**10MA** (0.25) **10MB** (0.37) **10MC** (0.55)	**20MA** (0.55) **20MB** (0.75)	**25S** (1.1) **25L** (1.5)	**30LA** (2.2) **30LB** (3.0)	**35M** (4.0)	**40S** (5.5)	**40M** (7.5)
CP07	356	362	-	-	-	-	-	-
CP17	368	374	424	-	-	-	-	-
CP37	385	391	441	435	-	-	-	-
CP47	409	415	465	459	567	566	-	-

Compact e-motor size	AC	AD «L»	AD «S»
05	122	136	123
10	138	138	124
20	158	148	133
25	177	170	144
30	192	179	153
35	220	191	164
40	255	216	216

Gearbox size	o
CP07	0
CP17	0
CP37	6.7
CP47	9.5

"S" refers to the terminal box size S while "L" refers to the terminal box size L.

If not otherwise specified, dimensions are expressed in mm

For motor brake and options dimension see EVOX Electric Motor and Brake Dimension

IN-LINE GEAR UNIT

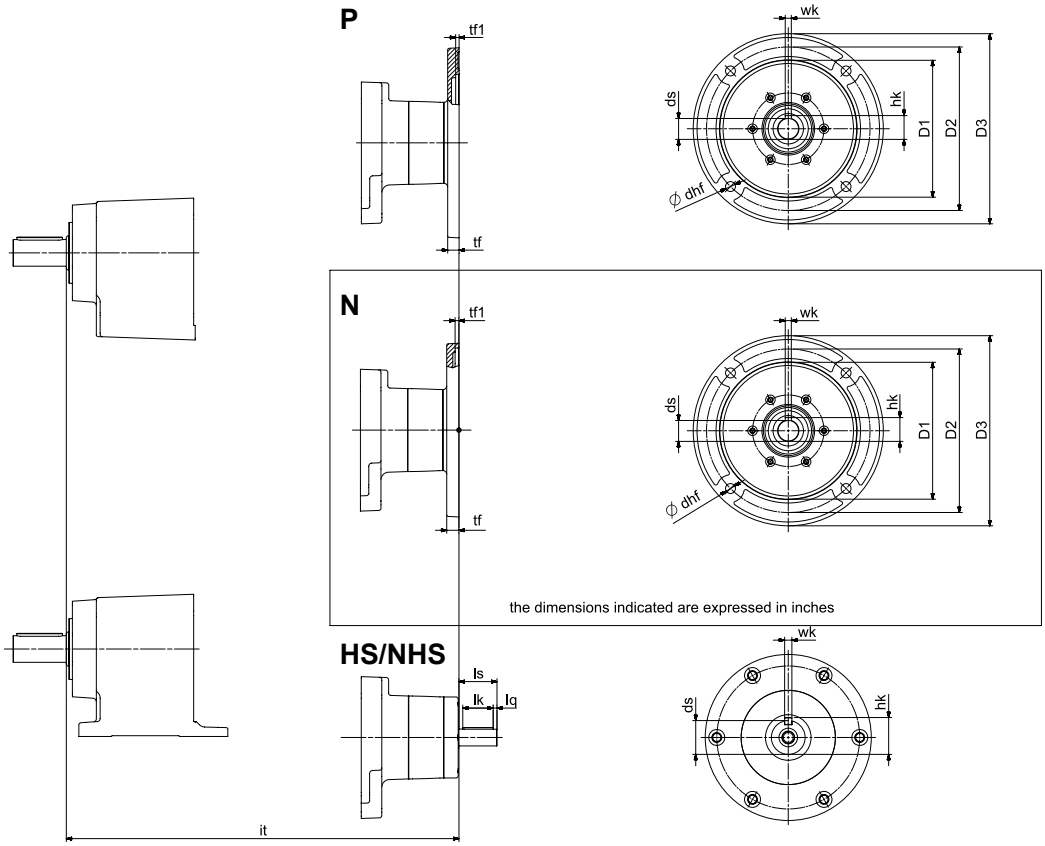

IEC Standard Flanges

	D3	D2	tf	dhf	D1	tf1	ds	hk	wk	it	CP07	CP17	CP37	CP47
Metric dimensions														
P56	120	100	12	6.5	80	3.5	9 E7	10.4	3 H9		174.2	-	-	-
P63	140	115	10	9	95	4	11 E7	12.8	4 H9		174.2	186	203	227
P71	160	130	10	9	110	4.5	14 E7	16.3	5 H9		174.2	186	203	227
P80	200	165	12	10.5	130	4.5	19 E7	21.8	6 H9		-	205.5	222.5	248.5
P90	200	165	12	10.5	130	4.5	24 E7	27.3	8 H9		-	-	222.5	248.5
P100	250	215	15	13	180	4.5	28 E7	31.3	8 H9		-	-	-	284.5
P112	250	215	15	13	180	4.5	28 E7	31.3	8 H9		-	-	-	284.5
P132	300	265	16	13	230	5	38 E7	41.3	10 H9		-	-	-	-

NEMA Standard Flanges - Dimensions expressed in inches

	D3	D2	tf	dhf	D1	tf1	ds	hk	wk	it	CP07	CP17	CP37	CP47
Inch dimensions														
N56	6-1/2	5-7/8	0,472	0,413	4-1/2 $^{+0.0020}_{-0.0011}$	0,197	5/8 $^{+0.0014}_{-0.0006}$	0,71	3/16 $^{+0.0012}_{-0.0000}$		7.390	7.854	8.524	9.469
N143	6-1/2	5-7/8	0,472	0,413	4-1/2 $^{+0.0020}_{-0.0011}$	0,197	7/8 $^{+0.0014}_{-0.0006}$	0,964	3/16 $^{+0.0012}_{-0.0000}$		-	8.248	8.917	9.862
N145	6-1/2	5-7/8	0,472	0,413	4-1/2 $^{+0.0020}_{-0.0011}$	0,197	7/8 $^{+0.0014}_{-0.0006}$	0,964	3/16 $^{+0.0012}_{-0.0000}$		-	8.248	8.917	9.862
N182	9	7-1/4	0,629	0,55	8-1/2 $^{+0.0020}_{-0.0012}$	0,197	1-1/8 $^{+0.0014}_{-0.0006}$	1,241	1/4 $^{+0.0014}_{-0.0000}$		-	-	-	11.240
N184	9	7-1/4	0,629	0,55	8-1/2 $^{+0.0020}_{-0.0012}$	0,197	1-1/8 $^{+0.0014}_{-0.0006}$	1,241	1/4 $^{+0.0014}_{-0.0000}$		-	-	-	11.240
N210	9	7-1/4	0,629	0,51	8-1/2 $^{+0.0020}_{-0.0012}$	0,216	1-3/8 $^{+0.003}_{-0.002}$	1,517	5/16 $^{+0.0014}_{-0.0000}$		-	-	-	-

Solid input shaft

	ds	ls	hk	lq	wk	lk	it	CP07	CP17	CP37	CP47
Metric dimensions											
HS1	16 h6	40	18	4	5 h9	32		-	200	216.5	-
HS2	19 h6	40	21.5	4	6 h9	32		-	-	239	263
HS3	24 h6	50	27	5	8 h9	40		-	-	-	284.5
Inch dimensions											
NHS1	5/8 $^{+0.0000}_{-0.0004}$	1.575	23/32		3/16 $^{+0.000}_{-0.001}$	1.26		-	7.874	8.504	-
NHS2	3/4 $^{+0.0000}_{-0.0005}$	1.575	27/32		3/16 $^{+0.000}_{-0.001}$	1.26		-	-	9.409	10.354
NHS3	7/8 $^{+0.0000}_{-0.0005}$	2	31/32		3/16 $^{+0.000}_{-0.001}$	1.575		-	-	-	11.201

If not otherwise specified, dimensions are expressed in mm

BACK TO EVOX CP

OPTIONS | AVAILABLE FOR EVOX IN-LINE GEAR UNIT

Option Designation - CP

CP gear unit + **T-40C** **SO** **PV** **DL** **AR** **EX** **OHR** **RB** **FO**

Stainless steel components
- (Standard)
FO Stainless steel output shaft and gear unit components

Reduced backlash
- (Standard backlash)
RB[2] Reduced backlash

Output reinforced bearings
- (Standard bearing)
OHR[1] Enhanced radial load capacity
OHA[1] Enhanced axial load capacity

Ex - explosion-proof gear unit
- (Standard) No ATEX
EX ATEX 2014/34 EU - 2D/2G T4 (135 °C) EN80079-36 and EN80079-37

Gear unit backstop – Only for HS../NHS.. inputs
(for gearmotor backstops see the Motor option list | Async. motor)
- (Standard) No backstop
AR Right-free rotation backstop
AL Left-free-rotation backstop

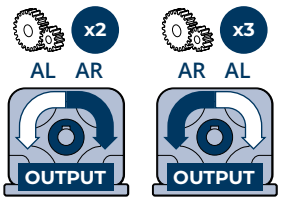

Output lip seals
- (Standard) single lip seal
DL Double lip seal (PV DL & PN DL options available)

Oil seals
- (Standard) NBR output and Viton input seals
PV Viton input & output seals
PN NBR output & input seals

Lubricant
- (Standard) Fill with long life synthetic oil

LU Synthetic Oil PAO ISO VG 150	**LN** Mineral Oil ISO VG 150
LY Synthetic Oil PAO ISO VG 220	**LZ** Mineral Oil ISO VG 220
LV Synthetic Oil PAO ISO VG 320	**LI** Mineral Oil ISO VG 320
LW Synthetic Oil PAO ISO VG 460	**LJ** Mineral Oil ISO VG 460
LH Synthetic Oil PAG ISO VG 150	**LA** Food grade Oil H1 ISO VG 150
LS Synthetic Oil PAG ISO VG 220	**LB** Food grade Oil H1 ISO VG 220
LK Synthetic Oil PAG ISO VG 460	**LC** Food grade Oil H1 ISO VG 320
LE Synthetic Oil PAO UH1 ISO VG 32	**SO** Without oil fil
LD Food grade Oil H1 ISO VG 460	

Temperature conditions
- (Standard)
T-40C Low ambient temperature
T+60C High ambient temperature

(1) Indicated performances may vary in different gear unit sizes and gear ratios.

(2) This value is strongly dependent on the gear size and ratio

To find the best configuration for your application, take a look at the catalogue or contact us

...(1)	+	RAL5010	C3	AC

Certificates

- (Standard) Without certificate

AC Gear unit compliance certificate

CC Inspection certificate

Surface protection

- (Standard) C2 protection

C3

C4

For C5 according to UNI EN ISO 12944-2, please contact our Technical Customer Support for further details

Painting

- (Standard)

RAL7042 Traffic Grey A

RAL5010 Gentian Blue

RAL9005 Jet Black

RAL9006 White aluminium

RAL9010 Pure White

RAL7035 Light Grey

RAL7001 Silver Grey

RAL7037 Dusty Grey

RAL5015 Sky Blue

RAL5024 Pastel blue

(1) Those options are available for Gear Units, Gearmotors, Gear brake motors, Stand alone motors and Stand alone Brake motors

BACK TO OPTION LIST

OPTIONS | AVAILABLE FOR EVOX IN-LINE GEAR UNIT

OPTION DETAIL

Temperature conditions

By standard Bonfiglioli gear units can operate in environment with temperature -20°C to +40 °C.
Limitations due to the specific selected optional lubricant (or other variant) may apply.

The T−40°C and T+60°C configuration variant include a dedicated set of design measures and product characterisation developed by Bonfiglioli to extend the standard operating temperature range of the gearbox. These measures include the optimisation and validation of bearings, lubrication systems, sealing solutions, and the definition of suitable gear ratios according to the specific temperature conditions.

T-40C

Low ambient temperature

Gear Unit can operate in environment with temperature in the range -40°C to 0°C.

T+60C

High ambient temperature

Gear Unit can operate in environment with temperature in the range +20°C to +60 °C.

Due to thermal operating limits, some gear ratios are not available when the T+60°C option is selected. The table below lists the gear ratios excluded for each gearbox size.

CP Series – Gear Ratios not available with T+60°C Option

CP Size	07	17	37	47
		2 stages		
Ratio	2.8	2.4	2.3	2.4
	3.2	2.9	2.7	3.0
	3.5	3.3	3.2	3.3
	4.0	3.8	3.4	3.9
	4.6	4.5	4.1	4.4
	4.9	5.1	4.3	4.9
	5.8	5.8	4.8	5.5
		6.2	5.4	6.4
		7.0	6.4	7.1
			7.8	8.0
			9.0	8.6
			10.0	9.7
				10.9
Max. input power [kW]/[HP]	1.5 / 2.0	2.0 / 2.7	2.5 / 3.4	3.5 / 4.7

ATTENTION

- T-40C and T+60C options are not available for ATEX gearboxes.
- With the T-40°C and T+60°C options, the PV and PN options are unavailable.
- With the T+60°C option, only Food Oil UH1 ISO VG 460 can be used.

BACK TO
OPTION LIST

Lubricant

EVOX CP gear units are supplied **lubricated for life** with Shel Omala S4 WE320 (PAG) synthetic oil.
It is recommended to carry out oil level checks according to the Installation and operating manual.
If the gear unit works at continuous duty, more frequent checks are recommended.
In both cases, top up if lubricant level is low.
The following additional variants are available:

Synthetic oil variants

LU	Synthetic Oil PAO ISO VG 150	**LE**	Synthetic Oil PAO UH1 ISO VG 32
LY	Synthetic Oil PAO ISO VG 220	**LH**	Synthetic Oil PAG ISO VG 150
LV	Synthetic Oil PAO ISO VG 320	**LS**	Synthetic Oil PAG ISO VG 220
LW	Synthetic Oil PAO ISO VG 460	**LK**	Synthetic Oil PAG ISO VG 460

Mineral oil variants

LI	Mineral Oil ISO VG 320	**LN**	Mineral Oil ISO VG 150
LJ	Mineral Oil ISO VG 460	**LZ**	Mineral Oil ISO VG 220

Mineral oil can be used in gearmotors with service factor S ≥ 1.3

Food grade oil variants

LA	Food grade Oil H1 ISO VG 150	**LC**	Food Grade Oil H1 ISO VG 320
LB	Food Grade Oil H1 ISO VG 220	**LD**	Food Grade Oil H1 ISO VG 460

When configuring LA, LB, LC and LD variants, the gear unit will be filled with oils compatible with the area of incidental contact with products and packaging materials from the food, cosmetics, pharmaceutical industries. These lubricants are NSF H1 approved, FDA 21 CFR § 178.3570 compliant and ISO 21469 certified.
For the use of these oils, further risk analysis (e.g. HACCP) is recommended to validate the technical solution.

Oil-free variant

SO **Without oil fill**

When configuring SO option, gear units are supplied without lubricant.

BACK TO OPTION LIST

OPTIONS | AVAILABLE FOR EVOX IN-LINE GEAR UNIT

OPTION DETAIL

The oil quantity for each gear unit size is:

Size	Volume (L)
07	0,35
17	0,7
37	1,1
47	1,8

The gear unit can be filled with different oils, according to the application needs.
Refer to the following table to identify correct viscosity according to the operating temperature of the gear unit.

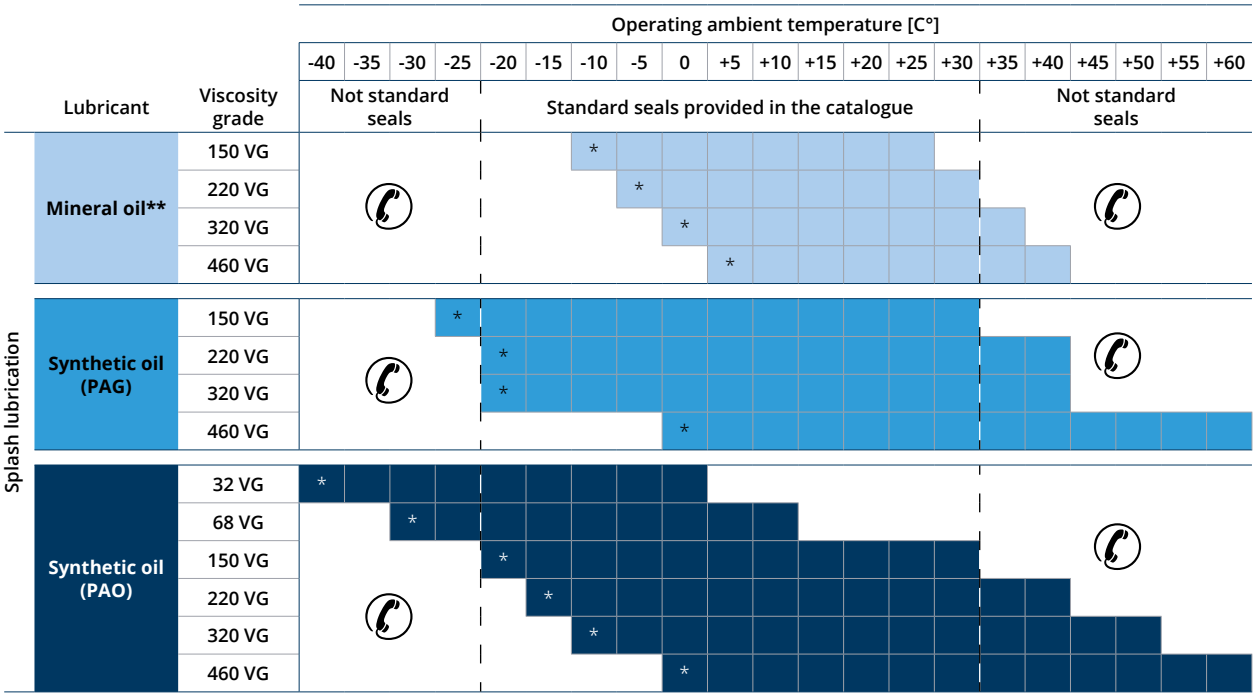

Recommended operating limits.

For temperatures that are outside the recommended range, please contact Bonfiglioli's Technical Service.

* For temperatures that are too low, the density of the oil is high enough that there is a risk of damaging the gearbox and the motor. Therefore, it is highly recommended to provide an adequate starting ramp

** Mineral oil can be used in gearmotors with service factor S ≥ 1.3

ATTENTION

- **Bonfiglioli's factory filled gear units should not be operated outside the temperature range indicated in this catalogue.**
- **Bonfiglioli shall not be liable for use of lubricants outside the suggested temperature range or mixtures of different lubricant types or manufacturers.**
- **Oils with the same viscosity and different brands may have different characteristics in terms of operating temperature ranges. The table above provides a general indication; it is therefore recommended to carefully check the technical specifications of the oil before topping up and using EVOX gear units.**
- **If filling is to be carried out, do not mix synthetic and mineral oils and/or different brands.**
- **Do not let the oil temperature drop below the pour point -40°C or rise above 120°C, also in storage conditions.**
- **Always refer to the User's Manual available at www.bonfiglioli.com for further indications concerning any periodic oil check and replacement.**

BACK TO OPTION LIST

Oil seals

Gear Units are supplied as standard with a Viton Seal in input and a single lip NBR Seal in output.

Suggested versions:

Ambient temperature	Below -40°C	From -40°C to -25°C (CTS)	From -25°C to 0°C	From 0°C to 35°C	From 35°C to 50°C	From 50°C to 60°C (CTS)	Above +60°C
Type of recommended seal	**CTS**	**PN***	**PN**	**Standard**	**PV**	**PV***	**CTS**

CTS = contact Bonfiglioli's Technical Service

(*) Please refer to "Temperature conditions" variants

PV

Viton input and output seals

With this option active, Gear Units are supplied with Viton seals both in input and output.

PN

NBR output & input seals

With this option active, Gear Units are supplied with NBR seals both in input and output.

Output lip seals

Gear Units are supplied as standard with a single output lip seal.

DL

Double lip seal

With this option active, Gear Units are supplied with a double lip NBR seal in output.

Select with this option also "PV", if you want the double lip Viton seals in output.

Gear unit backstop

Gear units can be supplied with a backstop device in case of HS../NHS.. input. For gearmotor backstops, see the Motor Option List. Be mindful that the Clockwise [CW] and Counter-clockwise [CCW] rotation option of the output shaft depends on the gear unit stage number.

AR/AL

Free right/left rotation backstop

- **AR:** free right rotation
- **AL**: free left rotation

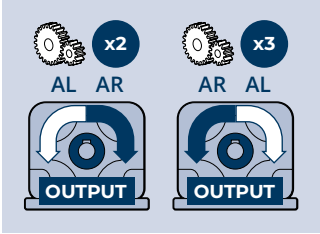

BACK TO OPTION LIST

OPTIONS | AVAILABLE FOR EVOX IN-LINE GEAR UNIT

OPTION DETAIL

Output reinforced bearings

Gear units are supplied with strong and reliable ball bearings as standard; however, if your application requires higher performance, you can choose reinforced bearings in output with the following options.

OHR

Enhanced radial load capacity

With those bearings, the radial loads at the gear unit output would be increased. This is the right solution for a decentralized (belt and pulley) or a chain-pinion transmission. The values listed in the following table are the rated ones and may vary based on output speed and service factor. Refer to the Performance Table with **Output Radial Load,** to choose the right bearing for your application.

		CP07	CP17	CP37	CP47
Maximum allowed pure radial loads [N]	**Standard version**	1470	2460	4110	5240
	OHR option	1640	3460	6580	8420

Parameters are calculated with the following criteria:

- [M_{n2}] torque applied on output shaft
- most unfavourable gear unit rotating direction [CW or CCW]
- the applied radial force with the most unfavourable α angle, among all gear ratios
- radial load applied in the middle of the output shaft

The permitted radial loads can increase considerably when the parameters listed above vary. **contact Bonfiglioli's Technical Service** if your application requires radial loads greater than the values indicated in the tables, because they could be available with a standard gear unit or with a simple option

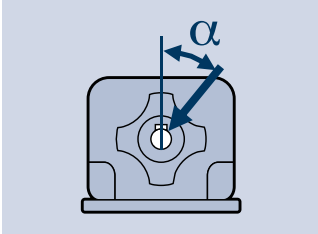

OHA

Enhanced axial load capacity

With those bearings, the axial loads at the gear unit output would be increased. This is the right solution for axial pumps or screw conveyors. Maximum axial load values are listed below:

		CP07	CP17	CP37	CP47
Maximum allowed pure axial loads [N]	**Standard version**	2370	3270	5600	7650
	OHA option			15000	20000

CTS = contact Bonfiglioli's Technical Service

These values do not depend on Service factor or output speed but are referred to pure axial forces in the Gear Unit direction. If output shaft has both radial and axial forces or the direction of the force is outgoing from the gear unit, **contact Bonfiglioli's Technical Service**

BACK TO
OPTION LIST

Reduced backlash

RB

Reduced backlash

With this option active, Gear Units are supplied with a reduced angular backlash compared to the standard version.

Size	Standard backlash [arcmin]		Reduced backlash [arcmin]	
	2 stages	3 stages	2 stages	3 stages
0.7	11-18	20-25	7-12	10-16
17	11-18	20-25	7-12	10-16
37	11-18	20-25	7-12	10-16
47	11-18	20-25	7-12	10-16

CTS = contact Bonfiglioli's Technical Service

Stainless steel gear unit components

FO

Stainless steel output shaft and gear unit components

To increase the life and reliability of the gear unit in wet or aggressive environments, this option includes the following stainless steel components:
- Output shaft
- Output flange fixing screws
- Solid input shaft for HS configurations
- Gear unit nameplate
- Oil filler cap
- Housing locking screws

BACK TO OPTION LIST

OPTIONS | AVAILABLE FOR EVOX IN-LINE GEAR UNIT

OPTION DETAIL

Painting option

RAL5010

RAL painting

Gear units with optional protection to class C3 or C4 are available in the colours listed in the following table.

Painting	Colour	RAL number
RAL7042 *	Traffic Grey A	7042
RAL5010	Gentian Blue	5010
RAL9005	Jet Black	9005
RAL9006	White Aluminium	9006
RAL9010	Pure White	9010
RAL7035	Light Grey	7035
RAL7001	Silver Grey	7001
RAL7037	Dusty Grey	7037
RAL5015	Sky Blue	5015
RAL5024	Pastel blue	5024

** gear units are supplied in this standard colour if no other colour is specified.*

NOTE: "**Paint**" options can only be specified in conjunction with "**Surface protection**" options.

C3

Surface protection class

When no specific protection class is requested, the surface of the gear units is by default at least equivalent to class C2 (UNI EN ISO 12944-2). For a higher degree of protection, the gear units can be supplied with a class **C3** and **C4** painting.

Surface protection	Typical environments	Maximum surface temperature	Corrosion class according to UNI EN ISO 12944-2
C3	Urban and industrial environments with up to 100% relative humidity (average air pollution)	120 °C	C3
C4	Industrial areas, coastal areas, chemical plants, with up to 100% relative humidity (high air pollution)	120 °C	C4

gear units with optional protection class **C3** or **C4** are available in a choice of colours.

Gear units can also be supplied with surface protection class **C5** according to UNI EN ISO 12944-2.

contact Bonfiglioli's Technical Service for further details.

Certificates

AC

Gear unit compliance certificate

The document certifies the compliance of the product with the purchase order and the construction in conformity with the applicable procedures of Bonfiglioli's Quality System.

CC

Inspection certificate

The document entails checking the order compliance, visual inspection of external conditions and instrumental testing of the electrical characteristics in unloaded conditions. Inspected units are sampled within the shipping batch and marked individually.

BACK TO OPTION LIST

MORE ON OPTIONS LIST

Explosion Proof Gear Unit

EX

ATEX 2014/34/EU - 2D/2G T4 (135 °C)

With this option active, the gear unit can be installed in Ex 1 and 21 areas (categories 2G and 2D). The temperature class is T4 (max 135°C).

To comply with this particular environment, Gear Units are equipped with:
- Service plugs for periodic lubricant level checks
- Factory-charged with lubricant (synthetic oil)
- Fluoro elastomer seal rings as standard
- Nameplate indication of the product category and type of protection
- Components that can operate above the max temperature indicated as a limit in the regulation
- Temperature indicator supplied with each unit

The unique oil level allows you to fit EVOX CP in any of the positions with a single product code, as the standard version.

Moreover, the oil quantity is the same as in the standard version, please see the **oil fill table** for further information.

For the choice of an "EX" Gear Unit, the Mn2 (nominal torque) is the same as indicated in the **Gear Unit Performance Table**, except for the following configurations with HS version:

	i	[n_1=1,400rpm] Mn_2	n_2	Pn_1	Solid Shaft
CP17		Nm	rpm	kW	
2 Stages	2.4	42	583	2.6	**HS1**
	2.9	45	483	2.3	
	3.3	47	428	2.1	
CP37					
2 Stages	2.3	67	622	4.4	**HS2**
	2.7	73	519	4.0	
	3.2	78	440	3.6	
	3.4	100	412	4.3	
	4.1	110	325	3.7	
	4.3	86	328	3.0	
	4.8	117	293	3.6	
	5.4	122	261	3.3	
	6.4	129	218	2.9	
	7.8	136	179	2.5	
CP47					
2 Stages	2.4	76	593	4.7	**HS2**
	3.0	84	467	4.1	
	3.3	90	420	4.0	
	3.9	124	363	4.7	
	4.4	131	322	4.4	
	4.9	137	285	4.1	
	5.5	148	256	4.0	
	6.4	156	219	3.6	
	7.1	161	197	3.3	
	8.0	166	176	3.1	

For further information refer to the user manual at **www.bonfiglioli.com** for compliant maintenance procedures.

BACK TO OPTION LIST

OPTIONS | AVAILABLE FOR EVOX IN-LINE GEAR UNIT

MORE ON OPTIONS LIST

Explosive atmosphere

An explosive atmosphere, for the purposes of Directive 2014/34/EU, is defined as a mixture:

a. of flammable substances, in the form of gases, vapours, mists or dusts;

b. with air;

c. under atmospheric conditions;

d. in which, after ignition, combustion spreads to the entire unburned mixture (sometimes, mainly with dust, the combustion does not consume the whole quantity of combustible material).

For further information refer to the user manual at www.bonfiglioli.com for compliant maintenance procedures.

An atmosphere that could become explosive due to local and/or operational conditions is called a potentially explosive atmosphere.

European harmonized Atex standards

Directive 2014/34/EU stipulates the minimum safety requirements for products intended for use in explosion risk areas within the member countries of the European Union.

The directive also assigns such equipment to categories, which are defined by the directive itself.

The following table describes the zones into which the user of a plant, in which an explosive atmosphere may occur,is required to divide the equipment application areas.

Zones		Frequency of formation of a potentially explosive atmosphere	Hazard Types
Gaseous atmosphere G	Dusty atmosphere D		
0	20	Present continuously or for long periods	Permanent
1	21	Likely to occur occasionally under normal operating conditions	Potential
2	22	It is not likely to occur in normal operations, but if it does, it will only persist for short periods	Minimum

BONFIGLIOLI RIDUTTORI gear units selected in this catalogue are suitable for installation in zones 1, 21, highlighted in light grey in the above diagram, and are also suitable for installation in areas with a lower level of protection (areas 2 and 22).

As from 20 April 2016 the ATEX directive 2014/34/EU come into force throughout the entire European Union, and replace existing conflicting national and European laws on explosive atmospheres and the previous directive 94/9/EC.

It should be emphasised that, for the first time, the directives also govern mechanical, hydraulic and pneumatic equipment, and not only electrical equipment as has been the case so far.

With regard to the Machinery Directive 2006/42/EC it should be noted that directive 2014/34/EU is a set of extremely specific requirements dedicated to the dangers deriving from potentially explosive atmospheres, whereas the Machinery Directive contains only very general explosion safety requirements (Annex I).

Consequently, as regards protection against explosion in potentially explosive atmospheres, Directive 2014/34/EU takes precedence over the Machinery Directive.

The requirements of the Machinery Directive apply to all other risks regarding machinery.

BACK TO OPTION LIST

Levels of protection for the various categories of equipment

The various categories of equipment must be able to operate in conformity with he Manufacturer's operational specifications, at certain defined levels of protection.

The availability of BONFIGLIOLI RIDUTTORI products is highlighted in grey.

Level of protection	Category		Protection type	Operating conditions
	Group I	Group II		
Very high	M1		Two independent protection or safety devices that can operate even at the occurrence of two independent faults.	The equipment remains powered and functional even in the presence of an explosive atmosphere.
Very high		1	Two independent protection or safety devices that can operate even at the occurrence of two independent faults.	The equipment remains powered and operational in areas 0, 1, 2 (G) and/or areas 20, 21, 22 (D).
High	M2		Protection suitable for normal operation and severe conditions.	The power supply to the equipment is interrupted in the presence of a potentially explosive atmosphere.
High		2	Protection suitable for normal operation and frequent failures or equipment where malfunctioning is normal.	The equipment remains powered and operational in areas 1, 2 (G) and/or areas 21, 22 (D).
Normal	2	3	Protection suitable for normal operation.	The pieces of equipment remain powered and operational in areas 2 (G) and/or areas 22 (D).

Group definition

Group I Applies to equipment intended for use underground work in mines and their surface installations, exposed to the risk of firedamp and/or combustible dust being released.

Group II Applies to equipment intended for use in other environments in which explosive atmospheres are likely to occur.

BONFIGLIOLI RIDUTTORI products may not therefore be installed in mines, classified in Group I and in Group II, category 1.

To summarise, the classification of equipment in to groups, categories and zones is illustrated in the table below, where by the availability of BONFIGLIOLI RIDUTTORI products is highlighted in grey.

	Group I		Group II					
Group	Mining, firedamp		Other potentially explosive areas (gas, dust)					
Category	M1	M2	1		2		3	
Atmosphere			Gas	Dust	Gas	Dust	Gas	Dust
Areas			0	20	1	21	2	22
Gear unit protec-tion type					Ex h Gb	Ex h Db	Ex h Gc	Ex h Dc

The products described here in conform to the minimum safety requirements of European Directive 2014/34/EU, which is part of the directives known as ATEX (ATmosphères EXplosibles).

BACK TO OPTION LIST

OPTIONS | AVAILABLE FOR EVOX IN-LINE GEAR UNIT

MORE ON OPTIONS LIST

Certificate of conformity

The Certificate of conformity, is the document certifying conformity of the product to Directive 2014/34/EU.

The validity of the Declaration is bound to observance of the instructions given in the User, Installation and Service Manual for safe use of the product throughout its service life. Users can download it at www.bonfiglioli.com.

The instructions regarding ambient conditions are of particular importance inasmuch as failure to observe them during operation of the product renders the certificate null and void.

In case of doubt regarding the validity of the certificate of conformity, contact the BONFIGLIOLI RIDUTTORI technical department.

Compatibility with other options

The following options cannot be selected in combination with the ATEX variant:

- Output shafts N in inches
- Compact inputs (S05...S35)
- Solid inputs in inches (NHS1...NHS3)
- NEMA inputs (N56...N215)
- Lubrication option (SO, LA...LY)
- Option on PN seals
- AR, AL backstop options
- Reinforced output bearing options (OHR, OHA)
- FO option
- C3-C4 painting options (any RAL colour)
- Temperature conditions option T-40C and T+60C

Electric motor EVOX

PRODUCT OVERVIEW

BONFIGLIOLI PORTFOLIO

EVOX BXN, MXN and MNN are asynchronous low voltage (<1000V) e-motors and brake motors, developed in the sign of modularity, efficiency and reliability.

The aim of this product is to be compliant with your needs, both in standalone version and in a compact coupling with Bonfiglioli Gear Units.

	Compact		IEC	
Efficiency	IE1/NEMA Standard	IE3/NEMA Premium	IE3/NEMA Premium	
Series	MNN	MXN	BXN	Power [kW]
Poles	4	4	4	
	05MA	05MA	63MA	0.12
	05MB	05MB	63MB	0.18
	05MC	-	-	0.25
	10MA	10MA	71MA	0.25
	10MB	10MB	71MB	0.37
	10MC	20MA	80MA	0.55
		20MB	80MB	0.75
		25S	90S	1.1
		25L	90L	1.5
		30LA	100LA	2.2
		30LB	100LB	3
		35M	112M	4
		40S	132S	5.5
		40M	132M	7.5

The Motor and Inverter in Bonfiglioli History

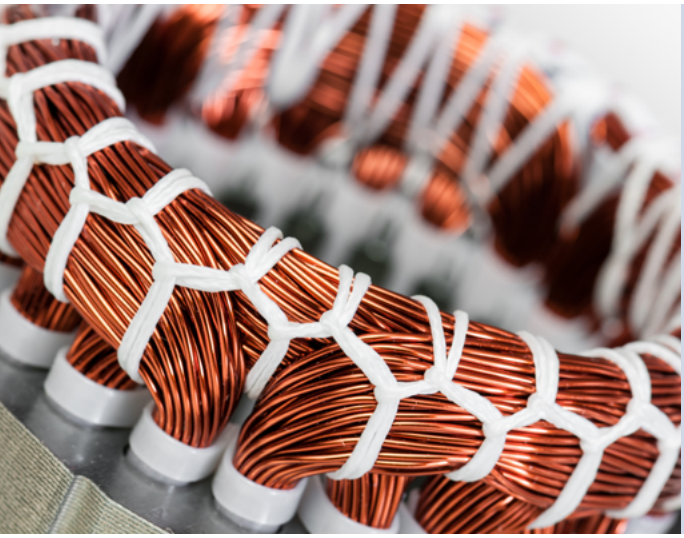

In the 1990s, Bonfiglioli integrated its gear unit design within the product portfolio and the know-how of an important local company, and started designing its own electric motors to create robust and efficient gearmotors.

In recent years Bonfiglioli has integrated its offer with servomotors and reluctance motors. In 2001, with the acquisition of Vectron, it began to design and manufacture inverters, thus becoming a **Solution Provider**.

1980s

Acquisition of the portfolio and know-how of an important electric motor company

Bonfiglioli starts designing **its own e-motors**

1990s

1995

Compact motors.

Launch of the ACFS and W series

Vectron acquisition.

Bonfiglioli starts developing **its own inverters**

2001

2012

BMD servomotors development

Bonfiglioli starts designing its servomotors

BSR Reluctance Motors

Bonfiglioli starts designing products with reluctance technology

2017

2020

EVOX Platform

Redesigned e-motor logic

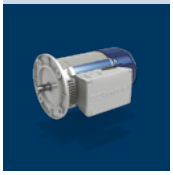

PRODUCT OVERVIEW

STANDARDS & DIRECTIVES

E-motor Offer

Bonfiglioli offers a great set of opportunities to match your application requirements around the world: you just need to choose your solution.

evox

	IEC adapter	Compact adapter
IE4 NEMA Efficiency Super Premium	BSR...E	
IE3 NEMA Premium Efficiency	BXN, BX, BSR...O	MXN
IE2 NEMA High Efficiency	BE	
IE1 NEMA Standard Efficiency	BN	MNN

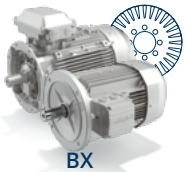

Complete your solution

S2U, S2U IP66

Agile

Active Cube

ANG

AxiaAgile

AxiaVert

Inverters

AEC

Regenerative Inverters

DGM

DGM Modular

Decentralized inverters

Induction technology

Reluctance technology

European standard

Standards

EVOX platform motors are manufactured according to the following standards:

EN	IEC	Standard description
EN 60034-1	IEC 60034-1	Rating and performance
EN 60034-2-1	IEC 60034-2-1	Standard methods for determining losses and efficiency from tests
EN IEC 60034-5	IEC 60034-5	Degrees of protection provided by the integral design of rotating electrical machines (IP code) - Classification
EN 60034-6	IEC 60034-6	Methods of cooling (IC Code)
EN IEC 60034-7	IEC 60034-7	Classification of types of construction, mounting arrangements and terminal box position (IM Code)
EN 60034-8	IEC 60034-8	Terminal markings and direction of rotation
EN 60034-9	IEC 60034-9	Noise limits
EN 60034-11	IEC 60034-11	Thermal protection
EN 60034-12	IEC 60034-12	Starting performance of single-speed three-phase cage induction motors
EN IEC 60034-14	IEC 60034-14	Mechanical vibration of certain machines with shaft heights 56 mm and higher - Measurement, evaluation and limits of vibration severity
EN 60034-30-1	IEC 60034-30-1	Efficiency classes of line operated AC motors (IE code)
EN IEC 63000	IEC 63000	Technical documentation for the assessment of electrical and electronic products with respect to the restriction of hazardous substances

Main directives

BXN, MXN and MNN motors meet the requirements of Directives 2014/35/EU (LVD - Low Voltage Directive), the 2014/30/EU (EMC - Electromagnetic Compatibility Directive), the 2009/125/EC (ERP - Energy Related Products Directive) and 2011/65/EU (RoHS – Restriction of Hazardous Substances) and their nameplates bear the CE mark.

As for the EMC Directive, construction is in accordance with standards EN 61000-6-2 (Generic standards - Immunity for industrial environments), EN 61000-6-4 (Generic standards - Emission standard for industrial environments).

This product should not be mixed with general household waste.

Disposal has to be carried out in conformity with Directive 2012/19/EU, where established, and in accordance to national regulations. They should be disposed of in accordance with any other legislation in force through the country.

Ventilation

Motors are externally ventilated (IC 411) according to EN 60034-6 and are equipped with a plastic cooling fan working in both directions.

Motors must be installed allowing access for maintenance purposes on motor and brake, if supplied. For other cooling devices, please see the options section in this catalogue.

PRODUCT OVERVIEW

STANDARDS & DIRECTIVES

Noise
Noise levels, measured using EN ISO 1680, within the maximum levels specified in standard EN 60034-9.

Vibration balancing
Rotor shaft is balanced with half key fitted, and falls within vibration class N, as standard EN 60034-14.

The responsibility for final product safety and compliance with applicable directives rests with the manufacturer or the assembler who incorporate the motors as component parts.

Other international requirements

BXN, MXN and MNN motors can be sold in the most important markets worldwide such as Europe, UK, USA, Canada, China, Brazil, India, Russia, Australia and New Zealand.

UKCA conformity
BXN, MXN and MNN motors comply with the directives applicable in the United Kingdom, and carry the nameplate with the UKCA logo (United Kingdom Conformity Assessed mark).

EAC conformity
All Bonfiglioli motors comply with the EAC (EurAsian Conformity) regulations of the Eurasian Economic Customs Union of Russia, Kazakhstan and Belarus.

GEMS and EECA conformity
BXN, MXN and MNN motors meet the requirements of the Australia Greenhouse and Energy Minimum Standards (GEMS) regulator and the New Zealand Energy Efficiency and Conservation Authority (EECA).

UL conformity
BXN, MXN and MNN motors comply with the requirements for the American and Canadian markets and carry the nameplate with UL logo.

INMETRO conformity
BXN and MXN motors with WD3 or WD4/WD10 winding comply with the INMETRO requirements for the Brazilian market, and come with an additional label.

BIS conformity
BXN and MXN motors with active BIS option* comply with Bureau of Indian Standard requirements for the Indian market, and include the nameplate with ISI logo.

CCC/CEL conformity*
BXN and MXN motors with CN option* active, comply with the requirements for the Chinese market and include, where applicable, the nameplate with CCC logo and/or the CEL label.

*The motor must be configured with the global motor option (CN).

POWER OUTPUT DEPENDING ON THE AMBIENT TEMPERATURE

Standard motors are class F and can work with an ambient temperature from -15°C to 40°C.
There is a reduction in power output with ambient temperature above 40°C.

Ambient temperature [°C]	40	45	50	55	60
P / P_N	1,00	0,97	0,94	0,90	0,86

POWER OUTPUT DEPENDING ON THE ALTITUDE

Performance given in the catalogue is valid at an altitude lower than 1000 metres above sea level.
There is a reduction in power output at altitude above 1000 above sea level.

Altitude a.s.l. [m]	0 - 1000	1500	2000	2500	3000	3500	4000
P / P_N	1,00	0,97	0,92	0,88	0,84	0,80	0,76

TERMINAL BOX

EVOX motors have 9 studs as standard. A ground terminal is also supplied for earthing of the equipment.
Wiring instructions are provided either in the box and in the user manual.
Terminals number and type are shown in the following table:

Adapter			
IEC	Compact	No. Of terminals	Terminal threads
BXN 63 ... BXN 112	**MXN 05 ... MXN 35** **MNN 05 .... MNN 20**	9	M4
BXN 132	**MXN 40**		

CABLE ENTRY

The holes used to bring cables to the terminal boxes use metric threads in accordance with standard EN 50262 as indicated in the following table:

Adapter		Terminal Box - Small "S"		Terminal Box - Large "L"		
IEC	Compact	Cable gland and dimensions	Position	Cable gland and dimensions	Position	Maximum cable diameter allowed [mm]
BXN 63 ... BXN 112	**MXN 05 ... MXN 35** **MNN 05 ... MNN 10**	2 x M25 x 1.5	1 + 1 hole on each side	2 x M25 x 1.5	1 + 1 hole on each side	17
		2 x M16 x 1.5		2 x M16 x 1.5		10
		-	-	1 x M16 x 1.5	1 hole in the back	10
BXN 132	**MXN 40**	-	-	2 x M32 x 1.5	1 + 1 hole on each side	21
		-	-	2 x M16 x 1.5		10
		-	-	1 x M16 x 1.5	1 hole in the back	10

PRODUCT OVERVIEW

BEARINGS

Life lubricated preloaded radial ball bearings are used on our motors. The bearings types are shown in the following table:

IEC adapter	DE	NDE	
		Without brake	With brake
BXN 63	6201 2Z C3	6201 2Z C3	6201 2Z C3
BXN 71	6202 2Z C3	6202 2Z C3	6202 2Z C3
BXN 80	6204 2Z C3	6204 2Z C3	6204 2Z C3
BXN 90	6205 2Z C3	6205 2Z C3	6205 2Z C3
BXN 100	6206 2Z C3	6206 2Z C3	6206 2Z C3
BXN 112	6306 2Z C3	6306 2Z C3	6306 2Z C3
BXN 132	6308 2Z C3	6308 2Z C3	6308 2Z C3

Compact adapter	DE	NDE	
		Without brake	With brake
MXN 05	6301 2Z C3	6201 2Z C3	6201 2Z C3
MXN 10	6302 2Z C3	6202 2Z C3	6202 2Z C3
MXN 20	6304 2Z C3	6204 2Z C3	6204 2Z C3
MXN 25	6205 2Z C3	6205 2Z C3	6205 2Z C3
MXN 30	6206 2Z C3	6206 2Z C3	6206 2Z C3
MXN 35	6306 2Z C3	6306 2Z C3	6306 2Z C3
MXN 40	6308 2Z C3	6308 2Z C3	6308 2Z C3

Calculated endurance lifetime L10h, as per ISO 281, in unloaded condition, exceeds 40000 hrs.

DE = drive end

NDE = non drive end

PRODUCT MODULARITY

Lots of e-motor versions available to perfectly **match** your **application needs.**

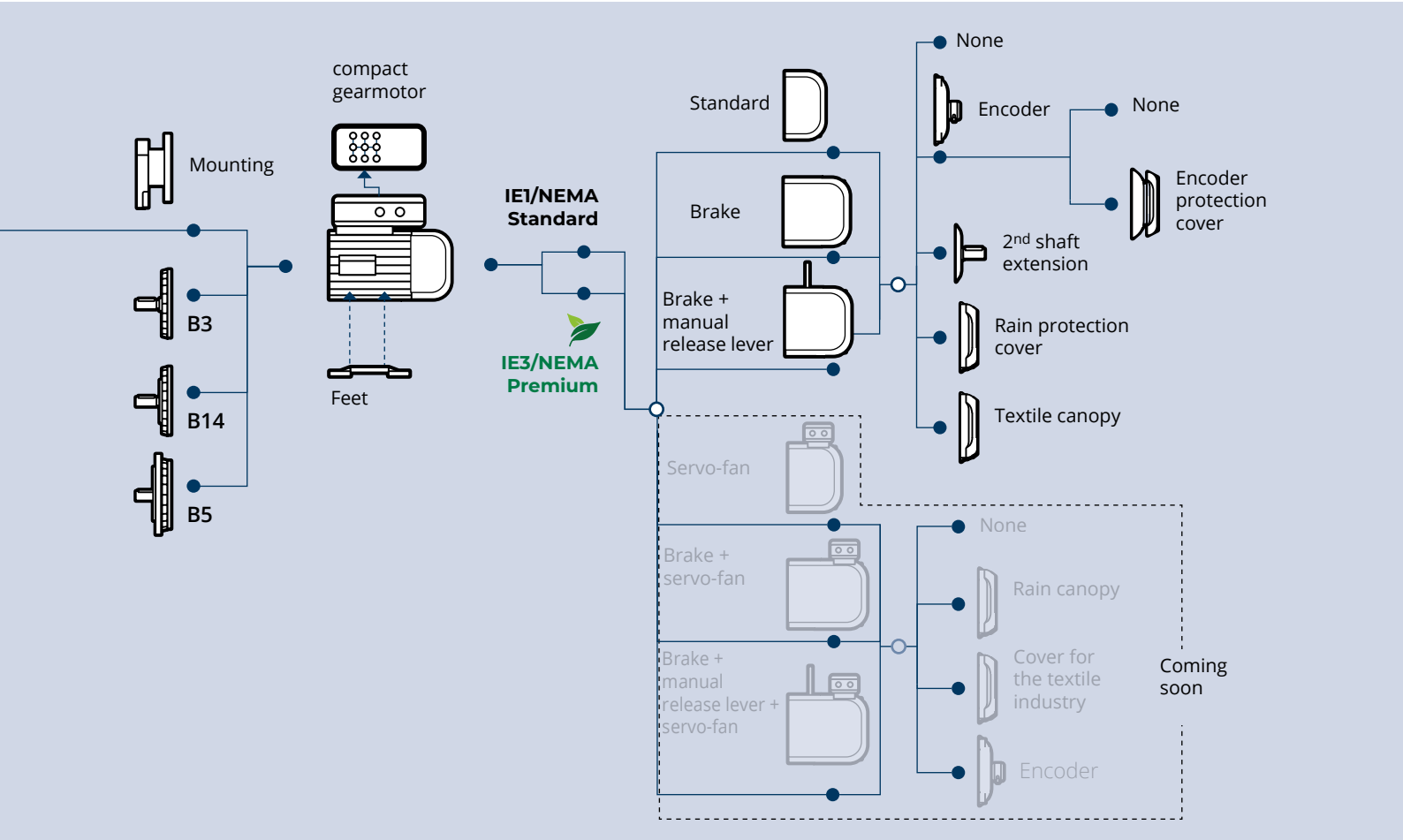

DC brake are available.

DESIGNATION

BXN	80MB	4	WD1	IP55	CLF	B5

Motor version - IEC Motors (BXN)

B5 IEC B5 Output Flange
B14 IEC B14 Output Flange
B3 IEC Feet Version
B35 IEC B5 Output Flange + Feet
B34 IEC B14 Output Flange + Feet

Motor Versions – Integrated motors (MXN, MNN)

Insulation class

CLF (Standard) class F insulation
CLH class H insulation

IP protection level

IP55 (Standard) - Dust and water jet protection
IP56 - Dust and powerful jet protection

Winding

See "**Winding - Voltage/Frequency correspondences table**"

Poles

4

Size

See "**Asynchronous E-Motor Performance Table**"

Asynchronous E-motor series

BXN Stand alone motor IE3/NEMA Premium **MXN** Integrated Motor IE3/NEMA Premium **MNN** Integrated Motor IE1/NEMA Standard

N	S	IC0	MFC	+	Brake	+	Options

See **"Option | EVOX Electric Motor Side"**

See **"EVOX Asynchronous E-Motor Brake"**

Fan cover material
MFC Metal fan cover

Cable entry position
Terminal box size S:
IC0 (Standard) Power cable entry at 90° and 270° to the axis
IC1 Power cable entry at 0° and 180° to the axis
Terminal box size L:
IC0 (Standard) Power cable entry and separate supply cable entry at 90° and 270° + brake cable entry at 180°
IC1 Power cable entry and brake cable entry at 180° relative to the axis + separate supply cable entry at 90°
IC2 Power cable entry and brake cable entry at 180° relative to the axis + separate supply cable entry at 270°

Terminal Box orientation vs Feet - Only for B3, B34, B35 versions

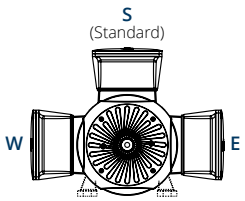

Terminal Box Position - Only for Gearmotors

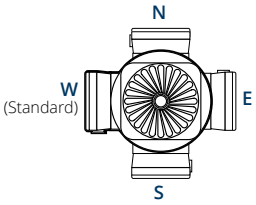

NAMEPLATE DESIGNATION

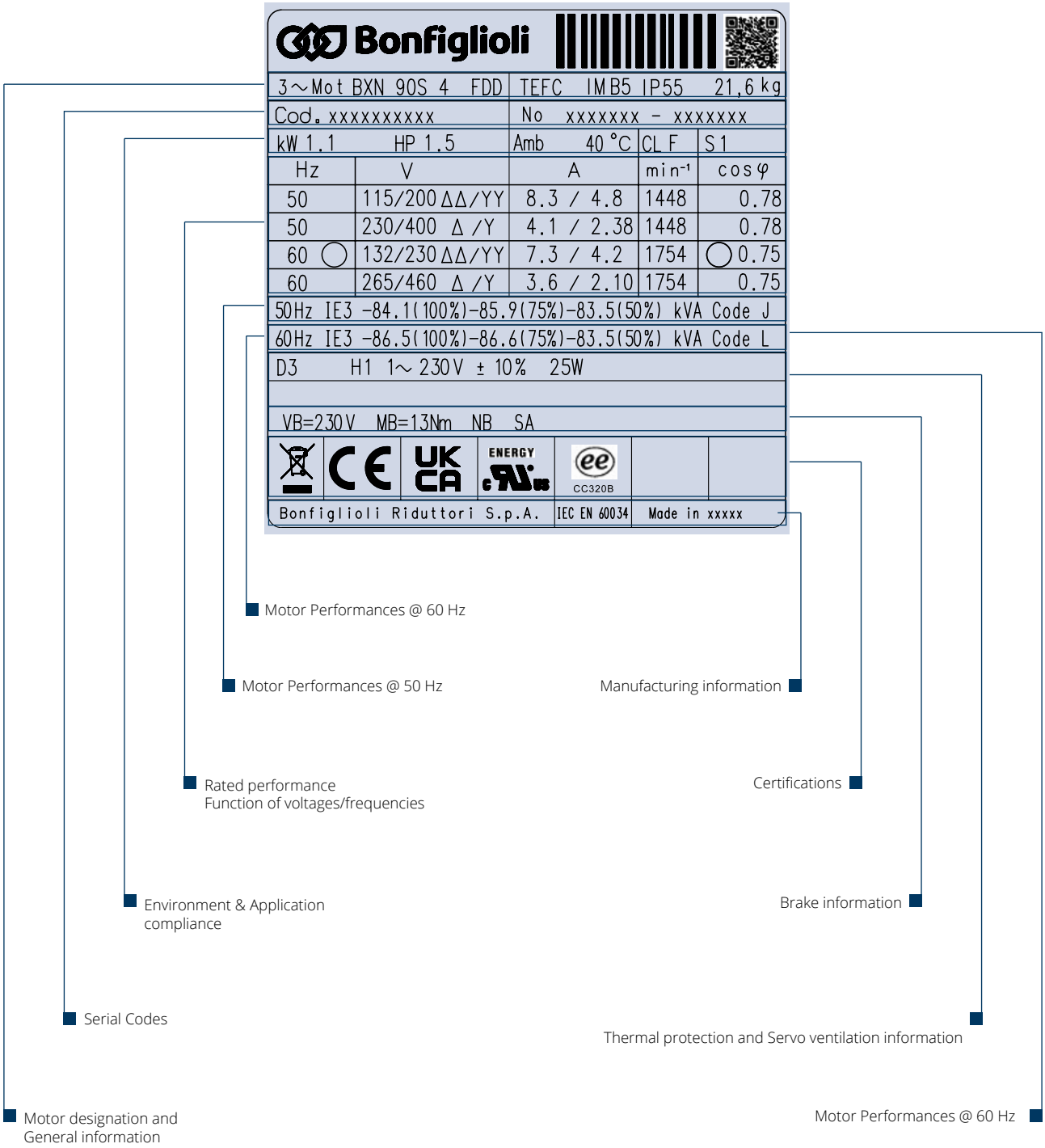

WINDING

Terminal box 9 PIN arrangement

Rotation is possible in both directions. If terminals U1, V1, and W1 are connected to line phases L1, L2 and L3, clockwise rotation (from drive end) is obtained. For counter clockwise rotation, switch two phases.

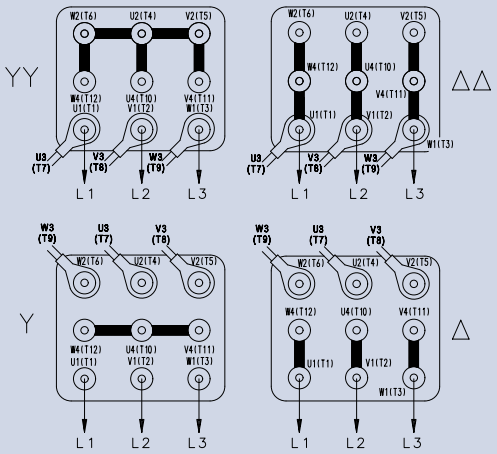

All EVOX motors are designed according to standard 60034-1, which states that a motor must be able to operate continuously in zone A within ± 5% of rated voltage and ± 2% of rated frequency, guaranteeing rated torque. Operation is also guaranteed in Zone B within a range of ± 10% of rated voltage and over a range of + 3 / -5% of frequency, but the machine may have performance deviations or overtemperatures exceeding those at rated voltage within the ± 5% range.

According to the standard, prolonged operation at the limits of zone B at ± 10% is not recommended.
For out-of-tolerance operation, temperature may exceed the limit provided in the relevant insulation class by 10 K.

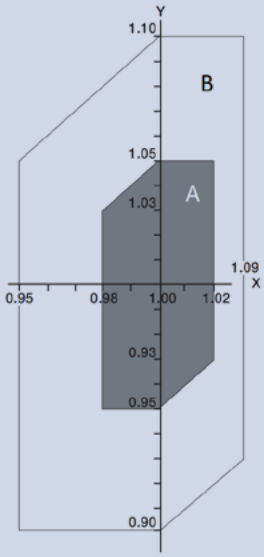

WINDING

	Market standard 6 PIN motors (4 variants on configurator)	EVOX 9 PIN motors (2 variants on configurator)	EVOX Winding name
I.E.	230/400V - 50Hz 115/200V - 50Hz 230/460V - 60Hz 132/265 - 60Hz	115/200/230/400V-50Hz 132/230/265/460V-60Hz	**WD1**

Product selector Winding - Voltage/Frequency correspondences

IEC 63-80 or compact 05-20

Winding	Motor supply {V} ΔΔ	YY	Δ	Y	Frequency [Hz]
WD1	115	200	230	400	**50**
	132	230	265	460	**60**
—					
WD3	110	190	220	380	**50**
	127	220	255	440	**60**
WD4	95	165	190	330	**50**
	110	190	220	380	**60**
WD5	120	208	240	415	**50**
	140	240	280	480	**60**
—					
WD7	147	255	290	500	**50**
	165	290	330	575	**60**

IEC 90-112 or compact 25-35

Winding	Motor supply {V} ΔΔ	YY	Δ	Y	Frequency [Hz]
WD1	115	200	230	400	**50**
	132	230	265	460	**60**
WD2	200	346	400	690	**50**
	230	400	460	—	**60**
WD3	110	190	220	380	**50**
	127	220	255	440	**60**
WD4	95	165	190	330	**50**
	110	190	220	380	**60**
WD5	120	208	240	415	**50**
	140	240	280	480	**60**
WD6	208	360	415	720	**50**
	240	415	480	—	**60**
WD7	147	255	290	500	**50**
	165	290	330	575	**60**

Higher than IEC 132 or compact 40

Winding	Motor supply {V} ΔΔ	YY	Δ	Y	Frequency [Hz]
WD8	230	400	460	—	**50**
	265	460	530	—	**60**
WD2	200	346	400	690	**50**
	230	400	460	—	**60**
WD9	220	380	440	—	**50**
	255	440	510	—	**60**
WD10	190	330	380	660	**50**
	220	380	440	—	**60**
WD11	240	415	480	—	**50**
	280	480	550	—	**60**
WD6	208	360	415	720	**50**
	240	415	480	—	**60**
WD12	290	500	575	—	**50**
	330	575	—	—	**60**

OPERATION WITH INVERTER POWER SUPPLY

Bonfiglioli electric motors can be used with PWM inverter power supply, and rated voltage at converter input up to 500 V. Typical torque/speed characteristics in S1 duty for motor with base frequency f_b = 50 Hz are given in the table below. For operating frequencies below approx. 30 Hz, due to the ventilation reduction, the torque of standard self-ventilated motors (IC411) must be properly derated or, alternatively, they must be equipped with independent servo-fan. For frequencies above the basic frequency, when the maximum inverter output voltage has been reached, the motor operates in a constant power operating range, with torque at the shaft that decreases approx. with the ratio (f/f_b). As the maximum torque of the motor decreases approx. with $(f/f_b)^2$, the permissible overload margin must be progressively reduced.

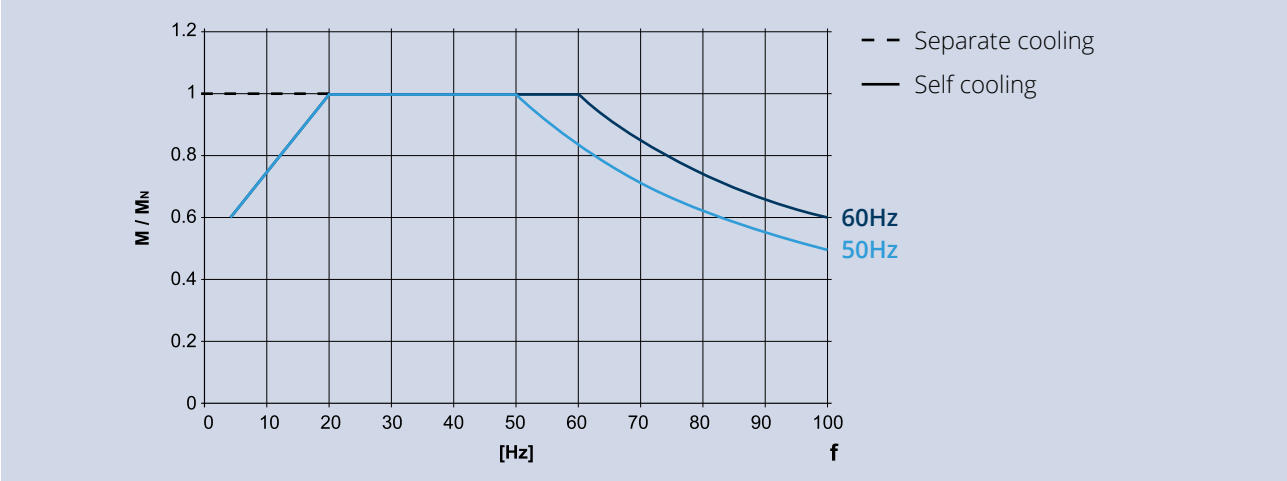

For operation above the rated frequency, the mechanical limit speed of the motors is given in the following table:

	n [min^{-1}] 4p
BXN 63 - BXN 132 **MXN 05 - MXN 40**	4000

At speeds above the rated speed, the motors have more mechanical vibration and ventilation noise; for these applications, a grade B rotor balance is recommended.

The electromagnetic brake, if any, must always be powered separately from the motor power supply.

PROTECTION CLASS

IPxx

Index of protection

The IP – index of protection – shows the protection rate of the device from any external agents. It is composed of IP and 2 numbers, which show:

- the first digit describes the degree of protection rate against solid objects, dust, the solid particles and bodies.

- the second digit describes the degree of protection offered against liquids.

Solids Particles < 50 mm **1**	**Solids** Particles < 12.5 mm **2**	**Solids** Particles < 2.5 mm **3**	**Solids** Particles < 1 mm **4**	**Solidi** Dust protection **5**	**Solidi Dust seal** **6**		
Water Vertical drip-ping water **1**	**Water** Dripping water < 15° **2**	**Water** Spraying water **3**	**Water** Spraying water **4**	**Water** Water jet **5**	**Water** Pressure water jet **6**	**Water** Immersion < 1 meter **7**	**Water** Immersion ≥ 3 meters **8**
Low level of protection			**Standard** level of protection		**High** level of protection		

Both EVOX standard and brake motors feature an IP55 rating by default, making them suitable for installation in dusty and humid environments

IP examples:

IP55: • Protection against dust deposits • Protection against water jets from any direction

IP56: • Protection against dust deposits • Protection against powerful water jets from any direction

INSULATION CLASS

NEMA motor insulation classes describes the ability of motor insulation in the windings to handle heat (Ref. IEC 60085 and IEC 60034-1). There are four insulation classes in use namely: A, B, F, and H. All four classes identify the allowable temperature rise from an ambient temperature of 40° C (104° F). Classes B and F are the most common in many applications.

Temperature rise (T) and maximum temperatures at hot spots (Tmax) for insulation classes (IEC 60034-1).

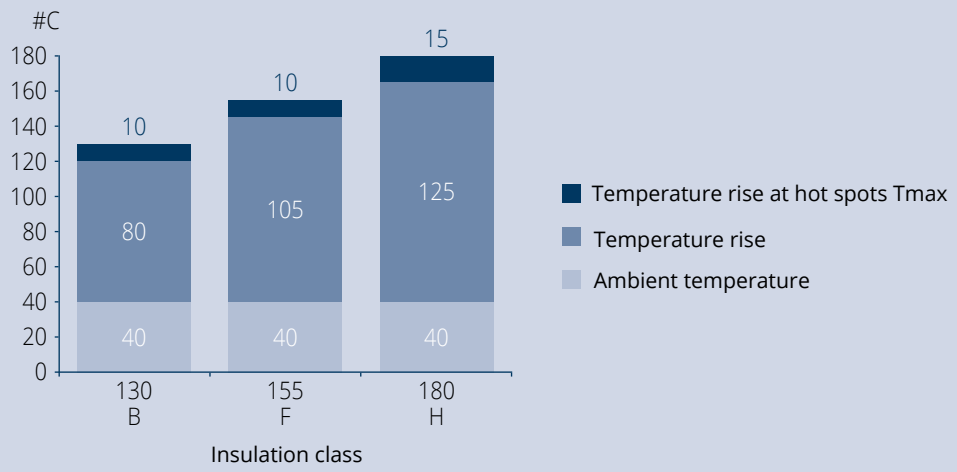

CL F

Class F insulation

Bonfiglioli electric motors have been designed as standard with a class F insulation system (enamelled wire, insulators, impregnation resins). In standard motors, stator winding overtemperature normally remains below the 80 K limit corresponding to class B overtemperature. Class F allows temperature increases of 105 K (measured by the resistance variation method) and maximum temperatures of 155°C in motor hot spots.

A careful selection of insulating components makes the motors compatible with tropical climates and normal vibration. For applications involving the presence of aggressive chemicals or high humidity, contact Bonfiglioli Engineering for assistance with product selection.

CL H

Class H insulation

This option can be selected to achieve class H insulation level.
Class H allows temperature increases of 125 K (measured with the resistance variation method) and maximum temperatures at motor hot positions of 180°C.

PROTECTION CLASS

VERSIONS

Motor Versions – IEC motors (BXN)

BXN motors are available in the design versions as indicated in the table below as per Standards EN 60034-7. Motor reporting on nameplate the standard mounting position can be mounted in the position illustrated in the following table:

B3

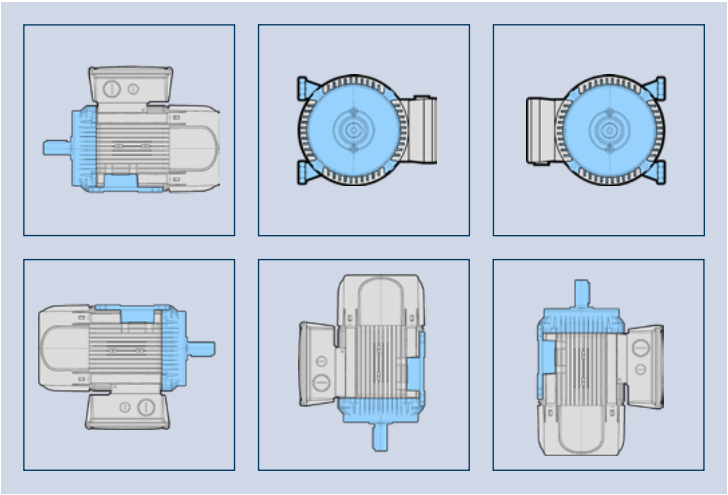

B5

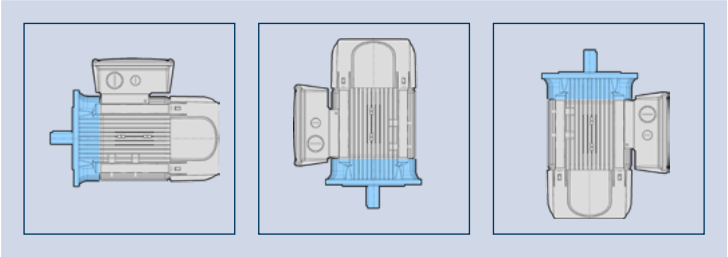

B14

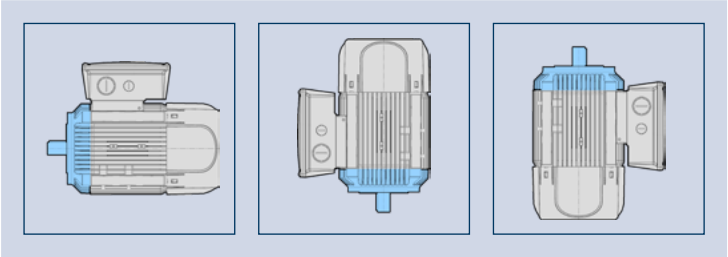

B3 mounting can be combined with B5 or B14 thus becoming B35 in the first case and B34 in the second one.

For outdoor applications where the motor is mounted with the output shaft facing downwards, the selection of rain protection cover (RC) option is recommended.

In this case, specify this request during the ordering phase, because it is not present in standard motor versions.

Motor Versions – Integrated motors (MXN, MNN)

In case a compact motor of the EVOX platform (MXN and MNN) is configured as a stand-alone product, please refer to the following list:

Motor series	Motor size	CP gear unit size	Coupling
MXN/MNN	**05MA – 25L**	≤ 47	C
		> 47	L
	30LA – 40M	≥ 47	C

CABLE ENTRY POSITION

This option allows the direction of cable entry into the terminal box to be selected.
In specific configurations, it enables the use of the optimised terminal box (size S) for IEC frame sizes 63, 71, 80, 90, 100 and 112, and for compact sizes 05, 10, 20, 25, 30 and 35.
If this option is not defined in the configurator, the standard terminal box design (size L) will remain unchanged.

Terminal box type

The following table shows the relationship between the "Cable entry position" option, the presence of a brake, and the motor size.

Cable entry position		[IC0] , [IC1] , [IC2]	
IEC motor size	Compact motor size	Without brake	With brake
63-71-80	05-10-20	S	L
90-100-112	25-30-35	S	L
132	40	L	L

To illustrate the logic behind the new product variants, the following examples show how the product designation changes according to the terminal box size and the available cable entry options.

Size S
Cable entry option = **[IC0], [IC1]**

[IC0]

[IC1]

Size L
Cable entry option = **[IC0], [IC1], [IC2]**

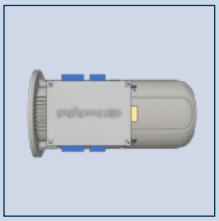

[IC0]

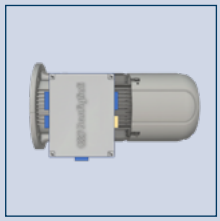

[IC1]

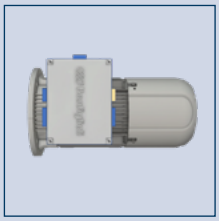

[IC2]

Fan cover material

Specifies the motor fan cover material. It is essential to ensure durability and compliance across various sectors.

MFC

Metal fan cover

Specifies the motor metal sheet fan cover material, offering a heavy-duty metallic alternative to the standard plastic version to meet specific industrial requirements.
It is essential to ensure durability and compliance in demanding sectors such as metalworking (impact and spark resistance), the food industry (metal particles detection on conveyors), cold environment, etc..
Starting from motor with brake size 90 ahead, the metal fan cover is provided as standard, while for smaller sizes it is mandatory when specific options like encoders, RAL painting and double shaft are selected.

IEC motor size	Compact motor size	Fan cover material			
		Without brake		With brake	
		standard	option	standard	option
63	05	Plastic	Metal	Plastic	Metal
71	10	Plastic	Metal	Plastic	Metal
80	20	Plastic	Metal	Plastic	Metal
90	25	Plastic	Metal	Metal	-
100	30	Metal	-	Metal	-
112	35	Metal	-	Metal	-
132	40	Metal	-	Metal	-

PERFORMANCE

EVOX ELECTRIC MOTOR

Tables introduction

Motor designation		Output power		Output speed n_1	Inertia	η			Torque			Weight
IEC	Compact	P_{n1}			J x10^{-4}	50%	75%	100%	T_N	T_S/T_N	T_A/T_N	IEC B5
		[kW]	[HP]	[rpm]	[kgm2]	[%]	[%]	[%]		[Nm]		[kg]
BXN 63MA 4	**MXN 05MA 4**	0.12	0.16	1,407	1.82	52.5	60.3	64.8	0.8	2.9	1.7	4.6
BXN 63MB 4	**MXN 05MB 4**	0.18	0.25	1,373	2.92	63.3	68.8	69.9	1.3	3.1	1.8	5.7

Rated Voltage V_N - Different winding executions

Motor designation		380 V				400 V				415 V			
			Current		KVA		Current		KVA		Current		KVA
IEC	Compact	cosφ	IN	I_S/I_N	Code	cosφ	IN	I_S/I_N	Code	cosφ	IN	I_S/I_N	Code
			[A]				[A]				[A]		
BXN 63MA 4	**MXN 05MA 4**	0.61	0.48	3.4	H	0.58	0.47	3.4	H	0.57	0.46	3.4	H
BXN 63MB 4	**MXN 05MB 4**	0.61	0.65	3.5	G	0.61	0.61	3.5	G	0.62	0.59	3.5	G

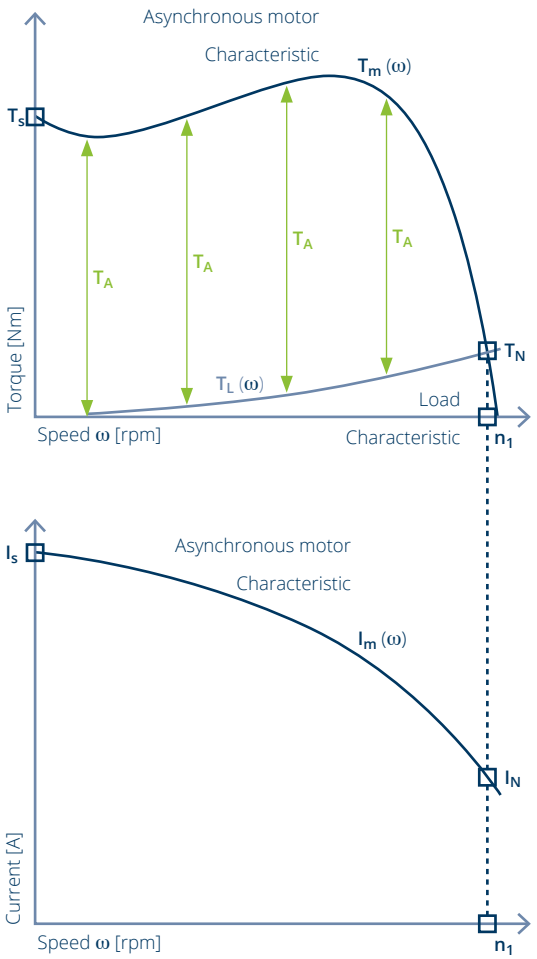

T_A= Acceleration torque

The T_A indicated in this catalogue is calculated with a finite element method because it is dependent from the Load Characteristic and the time.

$$T_a(t) = T_m(t) - T_L(t) = J\frac{\delta\omega}{\delta t}$$

(J is the motor + load inertia, both reduced at the output motor shaft)

T_A in this catalogue is calculated without a Load Characteristics and with only the EVOX motor inertia.

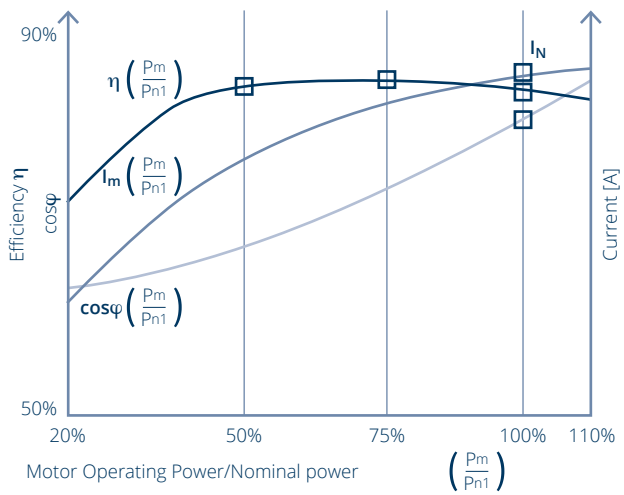

Please, refer to **Configuration Guidelines & Setup** section before the motor configuration, in order to select the correct Power.

Tolerances

As per CEI EN 60034-1 standards, the tolerances below apply to the following quantities.

Tolerance rule	Tolerance parameter
-0.15 (1 - η) P≤50kW	η
-(1 - cosφ)/6 min 0.02 max 0.07	cosφ
±20%*	Slip
+20%	Is
-15% +25%	Ts
-10%	Max torque

(*) ≤30% for motors with Pn < 1kw

Coefficient code for locked-rotor KVA - Nameplate marking

KVA coefficient is a good solution to compare the inrush of different manufactures' motors than % inrush current. The reason being that if a motor has a high full load current, the % inrush will be lower than a motor with the same inrush current but a lower full load current.

Letter designation	KVA per horsepower*	Letter designation	KVA per horsepower*
A	0 - 3.15	L	9.0 - 10.0
B	3.15 - 3.55	M	10.0 - 11.2
C	3.55 - 4.0	N	11.2 - 12.5
D	4.0 - 4.5	P	12.5 - 14.0
E	4.5 - 5.0	R	14.0 - 16.0
F	5.0 - 5.6	S	16.0 - 18.0
G	5.6 - 6.3	T	18.0 - 20.0
H	6.3 - 7.1	U	20.0 - 22.4
J	7.1 - 8.0	V	22.4 and up
K	8.0 - 9.0		

(*) the KVAs defined as horsepower range include the lower figure up to, but not including, the higher figure.

To determinate KVA per HP, use the following formula:

$$\frac{KVA}{P_{n1}\ [\text{express in HP}]} \quad \text{where } KVA = V_n \ \ I_S \frac{\sqrt{3}}{1000}$$

PERFORMANCE

EVOX ELECTRIC MOTOR

Performance Table – 50Hz

IE3/NEMA Premium - 400 V - 50 Hz - 4 poles

Motor designation		Output power		Output speed	Inertia	η				Torque		Weight
IEC	Compact	P_{n1}		n_1	J_m J x10-4	50%	75%	100%	T_N	T_S/T_N	T_A/T_N	
		[kW]	[HP]	[rpm]	[kgm²]	[%]	[%]	[%]		[Nm]		[kg]
BXN 63MA 4	MXN 05MA 4	0.12	0.16	1,407	1.82	52.5	60.3	64.8	0.8	2.9	1.7	4.6
BXN 63MB 4	MXN 05MB 4	0.18	0.25	1,373	2.92	63.3	68.8	69.9	1.3	3.1	1.8	5.7
BXN 71MA 4	MXN 10MA 4	0.25	0.33	1,388	6.28	67.9	72.8	73.5	1.7	1.6	2.4	6.5
BXN 71MB 4	MXN 10MB 4	0.37	0.50	1,419	9.70	70.8	76.0	77.3	2.5	2.6	2.5	8.3
BXN 80MA 4	MXN 20MA 4	0.55	0.75	1,447	17.78	77.4	80.9	80.8	3.6	1.9	1.6	10.7
BXN 80MB 4	MXN 20MB 4	0.75	1.00	1,451	28.89	82.5	85.1	82.5	4.9	2.4	2.0	14.4
BXN 90S 4	MXN 25S 4	1.1	1.50	1,448	31.76	83.5	85.9	84.1	7.3	2.4	3.4	15.6
BXN 90L 4	MXN 25L 4	1.5	2.00	1,441	34.96	81.7	84.3	85.3	9.9	2.6	2.4	16.6
BXN 100LA 4	MXN 30LA 4	2.2	3.00	1,458	90.01	86.3	88.4	86.7	14.4	3.4	2.3	29.5
BXN 100LB 4	MXN 30LB 4	3.0	4.00	1,452	90.01	86.2	88.0	87.7	19.7	3.2	3.0	29.5
BXN 112M 4	MXN 35M 4	4.0	5.40	1,453	105.43	87.1	88.8	88.6	26.3	2.7	2.8	35.1
BXN 132S 4	MXN 40S 4	5.5	7.50	1,478	497.42	90.0	91.4	89.6	35.6	4.0	3.4	67.9
BXN 132M 4	MXN 40M 4	7.5	10.00	1,473	497.42	89.5	91.0	90.4	48.6	3.7	3.2	67.9

Motor designation		380 V				400 V				415 V			
			Current		KVA		Current		KVA		Current		KVA
IEC	Compact	cosφ	IN	I_S/I_N	Code	cosφ	IN	I_S/I_N	Code	cosφ	IN	I_S/I_N	Code
			[A]				[A]				[A]		
BXN 63MA 4	MXN 05MA 4	0.61	0.48	3.4	H	0.58	0.47	3.4	H	0.57	0.46	3.4	H
BXN 63MB 4	MXN 05MB 4	0.61	0.65	3.5	G	0.61	0.61	3.5	G	0.62	0.59	3.5	G
BXN 71MA 4	MXN 10MA 4	0.73	0.71	4.8	H	0.74	0.67	4.8	H	0.73	0.65	4.8	H
BXN 71MB 4	MXN 10MB 4	0.65	1.12	6.3	L	0.66	1.05	6.3	L	0.63	1.06	6.3	L
BXN 80MA 4	MXN 20MA 4	0.73	1.40	6.1	J	0.75	1.31	6.1	J	0.73	1.29	6.1	J
BXN 80MB 4	MXN 20MB 4	0.78	1.71	7.4	K	0.78	1.63	7.4	K	0.79	1.56	7.4	K
BXN 90S 4	MXN 25S 4	0.78	2.51	7.3	J	0.78	2.38	7.3	J	0.77	1.33	7.3	J
BXN 90L 4	MXN 25L 4	0.75	3.59	6.7	J	0.75	3.44	6.7	J	0.75	3.31	6.7	J
BXN 100LA 4	MXN 30LA 4	0.80	4.68	8.8	L	0.81	4.42	8.8	L	0.81	4.28	8.8	L
BXN 100LB 4	MXN 30LB 4	0.81	6.39	8.1	K	0.80	6.14	8.1	K	0.80	5.93	8.1	K
BXN 112M 4	MXN 35M 4	0.83	8.31	7.6	J	0.82	7.97	7.6	J	0.82	7.70	7.6	J
BXN 132S 4	MXN 40S 4	0.77	11.70	11.4	N	0.79	11.00	9.8	L	0.79	10.60	9.8	L
BXN 132M 4	MXN 40M 4	0.78	15.90	10.9	N	0.79	15.10	9.2	L	0.79	14.60	9.2	L

IE1/NEMA Standard - 400 V - 50 Hz - 4 poles

Motor designation		Output power		Output speed	Inertia	η				Torque		Weight
IEC	Compact	P_{n1}		n_1	J_m J x10-4	50%	75%	100%	T_N	T_S/T_N	T_A/T_N	
		[kW]	[HP]	[rpm]	[kgm²]	[%]	[%]	[%]		[Nm]		[kg]
	MNN 05MA 4	0.12	0.16	1,340	1.80	45.8	52.4	50.0	0.9	2.0	1.5	4.5
	MNN 05MB 4	0.18	0.25	1,330	2.00	49.9	56.5	57.0	1.3	2.5	1.3	4.8
	MNN 05MC 4	0.25	0.33	1,317	2.92	60.4	65.5	61.5	1.8	2.6	1.4	5.7
	MNN 10MA 4	0.25	0.33	1,375	4.58	58.0	65.4	61.5	1.7	1.5	1.8	5.6
	MNN 10MB 4	0.37	0.50	1,368	6.28	65.4	70.8	66.0	2.6	1.5	1.6	6.5
	MNN 10MC 4	0.55	0.75	1,360	7.99	67.9	72.7	70.0	3.9	1.8	1.5	7.4

Motor designation		380 V				400 V				415 V			
			Current		KVA		Current		KVA		Current		KVA
IEC	Compact	cosφ	IN	I_S/I_N	Code	cosφ	IN	I_S/I_N	Code	cosφ	IN	I_S/I_N	Code
			[A]				[A]				[A]		
	MNN 05MA 4	0.71	0.47	2.6	F	0.68	0.47	2.6	F	0.68	0.45	2.6	F
	MNN 05MB 4	0.67	0.70	2.7	F	0.64	0.69	2.7	F	0.62	0.68	2.7	F
	MNN 05MC 4	0.65	0.91	2.9	F	0.67	0.85	2.9	F	0.67	0.82	2.9	F
	MNN 10MA 4	0.73	0.78	3.9	G	0.70	0.77	3.9	G	0.69	0.75	3.9	G
	MNN 10MB 4	0.75	1.07	4.3	G	0.74	1.03	4.3	G	0.74	0.99	4.3	G
	MNN 10MC 4	0.75	1.57	4.3	G	0.75	1.49	4.3	G	0.75	1.44	4.3	G

Performance Table – 60Hz

IE3/NEMA Premium - 460 V - 60 Hz - 4 poles

Motor designation IEC	Motor designation Compact	Output power P_{n1}		Output speed n_1	Inertia J_m J x10-4	η 50%	η 75%	η 100%	Torque T_N	Torque T_S/T_N	Torque T_A/T_N	Weight
		[kW]	[HP]	[rpm]	[kgm²]	[%]	[%]	[%]		[Nm]		[kg]
BXN 63MA 4	MXN 05MA 4	0.12	0.16	1,724	1.82	54.2	62.2	66.0	0.7	3.8	2.7	4.6
BXN 63MB 4	MXN 05MB 4	0.18	0.25	1,719	2.92	65.0	71.1	69.5	1.0	3.9	3.0	5.7
BXN 71MA 4	MXN 10MA 4	0.25	0.33	1,706	6.28	68.5	74.1	73.4	1.4	1.8	2.1	6.5
BXN 71MB 4	MXN 10MB 4	0.37	0.50	1,731	9.70	70.7	76.6	78.2	2.0	3.1	4.4	8.3
BXN 80MA 4	MXN 20MA 4	0.55	0.75	1,755	17.76	77.7	82.1	81.1	3.0	2.2	2.2	10.7
BXN 80MB 4	MXN 20MB 4	0.75	1.00	1,757	28.85	82.3	85.8	85.5	4.1	2.7	3.0	14.4
BXN 90S 4	MXN 25S 4	1.1	1.50	1,754	31.76	83.5	86.6	86.5	6.0	2.7	2.9	15.6
BXN 90L 4	MXN 25L 4	1.5	2.00	1,750	35.11	83.4	86.5	86.5	8.2	2.8	2.4	16.6
BXN 100LA 4	MXN 30LA 4	2.2	3.00	1,765	90.01	87.1	89.6	89.5	11.9	3.8	2.8	29.5
BXN 100LB 4	MXN 30LB 4	3.0	4.00	1,761	90.01	87.1	89.5	89.5	16.3	3.6	4.4	29.5
BXN 112M 4	MXN 35M 4	3.7	5.00	1,762	105.43	86.6	89.2	89.5	20.1	3.1	3.3	35.1
BXN 132S 4	MXN 40S 4	5.5	7.50	1,779	497.42	89.0	91.1	91.7	29.5	5.0	4.0	67.9
BXN 132M 4	MXN 40M 4	7.5	10.00	1,777	497.42	89.1	91.1	91.7	40.3	4.5	3.8	67.9

Motor designation IEC	Motor designation Compact	380 V cosφ	380 V Current IN	380 V Current I_S/I_N	380 V KVA Code	460 V cosφ	460 V Current IN	460 V Current I_S/I_N	460 V KVA Code	575 V cosφ	575 V Current IN	575 V Current I_S/I_N	575 V KVA Code
			[A]				[A]				[A]		
BXN 63MA 4	MXN 05MA 4	0.52	0.53	4.1	L	0.52	0.44	4.1	L	0.51	0.35	4.1	L
BXN 63MB 4	MXN 05MB 4	0.56	0.67	4.7	K	0.55	0.56	4.7	K	0.51	0.48	4.7	K
BXN 71MA 4	MXN 10MA 4	0.70	0.72	6.0	K	0.70	0.59	6.0	K	0.71	0.47	6.0	K
BXN 71MB 4	MXN 10MB 4	0.60	1.19	7.7	N	0.61	0.96	7.7	N	0.60	0.79	7.7	N
BXN 80MA 4	MXN 20MA 4	0.71	1.41	7.3	K	0.72	1.15	7.3	K	0.75	0.88	7.3	K
BXN 80MB 4	MXN 20MB 4	0.77	1.71	8.8	L	0.76	1.43	8.8	L	0.75	1.16	8.8	L
BXN 90S 4	MXN 25S 4	0.77	1.33	7.3	J	0.75	2.10	8.5	L	0.75	2.10	8.5	L
BXN 90L 4	MXN 25L 4	0.75	3.50	8.3	L	0.74	2.92	8.3	L	0.74	2.34	8.3	L
BXN 100LA 4	MXN 30LA 4	0.79	4.72	10.5	M	0.79	3.89	10.5	M	0.78	3.14	10.5	M
BXN 100LB 4	MXN 30LB 4	0.79	6.46	9.8	M	0.78	5.37	9.8	M	0.77	4.34	9.8	M
BXN 112M 4	MXN 35M 4	0.79	7.96	9.3	L	0.78	6.59	9.3	L	0.78	5.30	9.3	L
BXN 132S 4	MXN 40S 4	0.77	11.70	11.4	N	0.77	9.72	11.4	N	0.77	7.78	11.4	N
BXN 132M 4	MXN 40M 4	0.78	15.90	10.9	N	0.78	13.20	10.9	N	0.78	10.60	10.9	N

IE1/NEMA Standard - 460 V - 60 Hz - 4 poles

Motor designation IEC	Motor designation Compact	Output power P_{n1}		Output speed n_1	Inertia J_m J x10-4	η 50%	η 75%	η 100%	Torque T_N	Torque T_S/T_N	Torque T_A/T_N	Weight
		[kW]	[HP]	[rpm]	[kgm²]	[%]	[%]	[%]		[Nm]		[kg]
	MNN 05MA 4	0.12	0.16	1,687	1.8	48.1	55.2	62.0	0.7	2.7	2.2	4.5
	MNN 05MB 4	0.18	0.25	1,669	2.0	52.0	59.2	66.0	1.0	3.4	1.9	4.8
	MNN 05MC 4	0.25	0.33	1,672	2.9	63.1	68.9	68.0	1.4	3.6	2.1	5.7
	MNN 10MA 4	0.25	0.33	1,696	4.6	59.6	67.0	68.0	1.4	1.8	2.8	5.6
	MNN 10MB 4	0.37	0.50	1,694	6.3	66.8	72.6	70.0	2.1	1.8	2.6	6.5
	MNN 10MC 4	0.55	0.75	1,689	8.0	70.5	75.4	74.0	3.1	2.2	2.4	7.4

Motor designation IEC	Motor designation Compact	380 V cosφ	380 V Current IN	380 V Current I_S/I_N	380 V KVA Code	460 V cosφ	460 V Current IN	460 V Current I_S/I_N	460 V KVA Code	575 V cosφ	575 V Current IN	575 V Current I_S/I_N	575 V KVA Code
			[A]				[A]				[A]		
	MNN 05MA 4	0.60	0.52	3.4	J	0.59	0.43	3.4	J	0.59	0.35	3.4	J
	MNN 05MB 4	0.54	0.81	3.5	J	0.56	0.65	3.5	J	0.56	0.52	3.5	J
	MNN 05MC 4	0.58	0.92	3.9	J	0.59	0.76	3.9	J	0.60	0.60	3.9	J
	MNN 10MA 4	0.65	0.84	4.8	J	0.66	0.68	4.8	J	0.66	0.55	4.8	J
	MNN 10MB 4	0.70	1.09	5.4	J	0.69	0.91	5.4	J	0.69	0.73	5.4	J
	MNN 10MC 4	0.70	1.58	5.6	J	0.69	1.31	5.6	J	0.67	1.08	5.6	J

BRAKE | EVOX ELECTRIC MOTOR

BRAKE OPTION LIST

Motor	+	FDD	15	NR	SA	400	R	AA	MRM	+	Options

Brake monitoring device

- (Standard) Without microswitch

MRM Release monitoring microswitch

MWM Wear monitoring microswitch

Brake hand release lever position

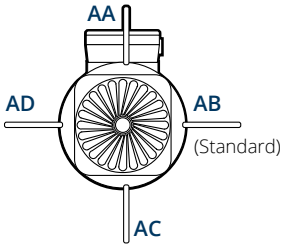

Brake hand release lever

- (Standard) No release lever

R Lever with a return spring

Brake supply

For FD brake see DC Brake Supply table

Separate brake supply

SD Separate DC brake supply

SA Separate AC brake supply

AC/DC type rectifier

NR Standard rectifier with mechanic fast turn off

SR Electronic rectifier with overexitation and fast turn off

Brake torque

For FD brake see Performance Table – DC Brake

Brake type

- (Standard) No brake

FDD DC brake

BACK TO BRAKE

BRAKE | EVOX ELECTRIC MOTOR

BRAKE PERFORMANCE

Tables introduction

- Brake designation
- Brake delay time during engagement
- Brake rise time of the braking torque
- Brake engagement time
- Brake disengagement time (up to M = 0.1Mdyn)
- Brake power absorption @ 20 °C
- Max energy per brake operation
- Braking energy between two successive air gap adjustments

Motor designation		Brake	Operating / Switching times				P	Wmax			W	Inertia	Weight	Tnom Brake			
IEC	Compact	ID	t_{11}	t_{12}	t_1	t_2		10 s/h	100 s/h	1000 s/h		Jx10^{-4}	IEC B5	1x Tmot	1.5x Tmot	2x Tmot	Max.
BXN	MXN		ms				W	KJ			MJ	[kgm²]	[kg]	Nm			
63MA 4	05MA 4	FDD06S	84	196	280	45	20.0	3.0	1.6	0.2	34	2.4	6.3	1	1.3	**1.6**	3.3

[Values calculated for coils with a connection voltage of 205 V DC at rated air gap and 0.7x rated current IN, at 20 °C.]

Operating/switching times of the spring-applied brakes

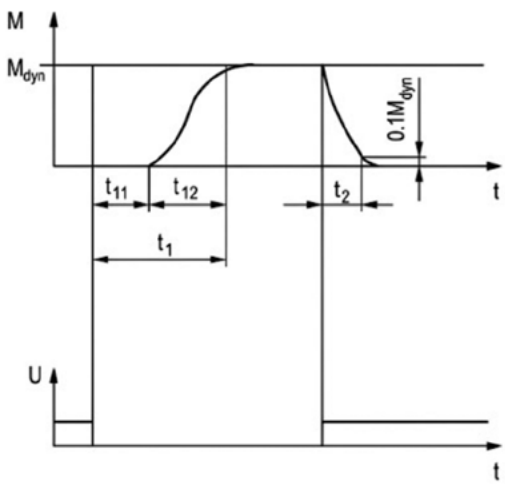

* Max brake torque tolerance ±25%

Available brake dynamic torque

Available brake static torque

Value Suggested torque (equivalent to 2xTmot)

BACK TO BRAKE

Performance Table – DC Brake

Motor designation		Brake	NR				NR (with fast turn off enabled)				SR (with fast turn off enabled)				P	Wmax			W	Inertia	Weight	Tnom Brake			
IEC	Compact	ID	t_{11}	t_{12}	t_1	t_2	t_{11}	t_{12}	t_1	t_2	t_{11}	t_{12}	t_1	t_2		10 s/h	100 s/h	1000 s/h		Jx10-4	IEC B5	1x Tmot	1.5x Tmot	2x Tmot	Max.
BXN	MXN		ms				ms				ms				W	KJ			MJ	[kgm2]	[kg]	Nm			
63MA 4	05MA 4	FDD06S	84	196	280	45	15	13	28	45	45	13	58	36	20.0	3.0	1.6	0.2	34	2.4	6.3	1	1.3	**1.6**	3.3
63MB 4	05MB 4	FDD06S	84	196	280	45	15	13	28	45	45	13	58	36	20.0	3.0	1.6	0.2	34	3.5	7.4	1.3	2	**2.6**	3.3
71MA 4	10MA 4	FDD06	84	196	280	45	15	13	28	45	45	13	58	36	20.0	3.0	1.6	0.2	34	7.4	9.2	1.6	2.3	**3.5**	6
71MB 4	10MB 4	FDD06	84	196	280	45	15	13	28	45	45	13	58	36	20.0	3.0	1.6	0.2	34	10.8	11	2.5	4	**4.5**	6
80MA 4	20MA 4	FDD08	93	217	310	57	15	16	31	57	45	16	61	46	25.0	7.4	2.95	0.4	87	19.8	14.6	3.5	6	**8**	12
80MB 4	20MB 4	FDD08	93	217	310	57	15	16	31	57	45	16	61	46	25.0	7.4	2.95	0.4	87	30.8	18.3	5	7	**9**	12
90S 4	25S 4	FDD10	141	329	470	76	28	19	47	76	58	19	77	61	31.5	11.8	4.0	0.5	106	35.8	21.6	7	11	**16**	23
90L 4	25L 4	FDD10	141	329	470	76	28	19	47	76	58	19	77	61	31.5	11.8	4.0	0.5	106	39.1	22.6	9	16	**23**	
100LA 4	30LA 4	FDD12	159	371	530	115	28	25	53	115	58	25	83	92	40.0	22.8	6.2	0.7	212	94	36.5	14	23	**32**	46
100LB 4	30LB 4	FDD12	159	371	530	115	28	25	53	115	58	25	83	92	40.0	22.8	6.2	0.7	212	94	36.5	18	32	**46**	
112M 4	35M 4	FDD14	126	294	420	210	17	25	42	210	47	25	72	168	51.5	28.2	7.3	0.8	230	114.4	45.1	25	40	**55**	80
132S 4	40S 4	FDD16	171	399	570	220	27	30	57	220	57	30	87	176	55.5	33.6	8.5	0.95	387	520.4	80.9	35	55	**70**	125
132M 4	40M 4	FDD16	171	399	570	220	27	30	57	220	57	30	87	176	55.5	33.6	8.5	0.95	387	520.4	80.9	45	80	**100**	125

Motor designation		Brake	NR				NR (with fast turn off enabled)				SR (with fast turn off enabled)				P	Wmax			W	Inertia	Weight	Tnom Brake			
IEC	Compact	ID	t_{11}	t_{12}	t_1	t_2	t_{11}	t_{12}	t_1	t_2	t_{11}	t_{12}	t_1	t_2		10 s/h	100 s/h	1000 s/h		Jx10-4	IEC B5	1x Tmot	1.5x Tmot	2x Tmot	Max.
BXN	MXN		ms				ms				ms				W	KJ			MJ	[kgm2]	[kg]	Nm			
-	05MA 4	FDD06S	84	196	280	45	15	13	28	45	45	13	58	36	20	3.0	1.6	0.2	34	2.4	6.3	1	1.3	**1.6**	3.3
-	05MB 4	FDD06S	84	196	280	45	15	13	28	45	45	13	58	36	20	3.0	1.6	0.2	34	3.5	7.4	1.3	2	**2.6**	3.3
-	05MC 4	FDD06	84	196	280	45	15	13	28	45	45	13	58	36	20	3.0	1.6	0.2	34	7.4	9.2	2	3	**3.5**	6
-	10MA 4	FDD06	84	196	280	45	15	13	28	45	45	13	58	36	20	3.0	1.6	0.2	34	10.8	11	1.6	2.3	**3.5**	6
-	10MB 4	FDD06	84	196	280	45	15	13	28	45	45	13	58	36	20	3.0	1.6	0.2	34	19.8	14.6	2.5	4	**4.5**	6
-	10MC 4	FDD08	93	217	310	57	15	16	31	57	45	16	61	46	25	7.4	2.95	0.4	87	30.8	18.3	3.5	6	**8**	12

* Max brake torque tolerance ±25%

Available brake dynamic torque

Available brake static torque

Value Suggested torque (equivalent to 2xTmot)

BRAKE | EVOX ELECTRIC MOTOR

BRAKE OPTION LIST DEEP DIVE

Permissible starts per hour, Z

The rating charts of brakemotors lend the permitted number of starts Z_0, based on 50% intermittence and for unloaded operation. The catalogue value represents the maximum number of starts per hour for the motor without exceeding the rated temperature for the insulation class F. To give a practical example for an application characterized by inertia J_c, drawing power P_r and requiring mean torque at start-up M_L the actual number of starts per hour for the motor can be calculated approximately through the following equation:

$$Z = \frac{Z_0 \cdot K_c \cdot K_d}{K_J}$$

where:

$K_J = \frac{J_m + J_c}{J_m}$	inertia factor
$K_c = \frac{M_a - M_L}{M_a}$	torque factor
$K_d =$	load factor, see the following table

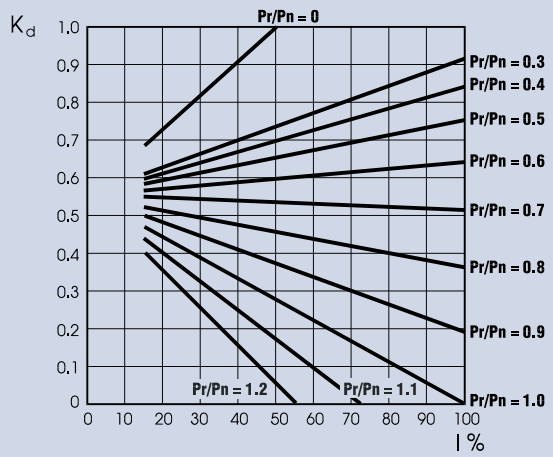

If actual starts per hour is within permitted value (Z) it may be worth checking that braking work is compatible with brake (thermal) capacity Wmax.

BACK TO BRAKE

Asynchronous brake motors

Standard electric motors can be equipped with a brake thus creating a self-braking unit. The brake helps in situation where it is necessary a quickly and safely stop of the machine.

All brakes are **designed for fail-safe operation:** the braking torque is applied by spring action whenever the power supply is interrupted, ensuring maximum safety.

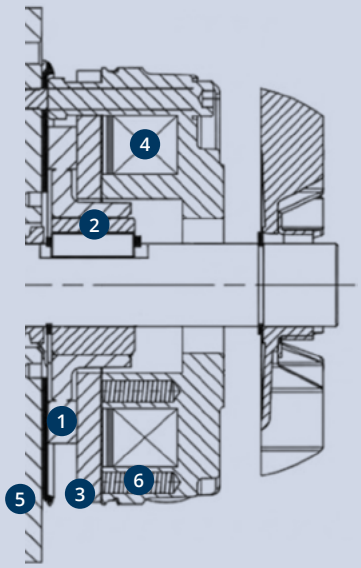

Key:

1. Brake disc
2. Disc carrier
3. Pressure plate
4. Brake coil
5. Motor rear shield
6. Brake springs

In the event of a power failure, pressure springs push the armature plate against the brake disc.
The disc is trapped between the armature plate and the motor shield, effectively stopping shaft rotation.
When the coil is energized, a magnetic field, strong enough to overcome the spring force, attracts the armature plate.
This releases the brake disc, which is integral with the motor shaft, allowing it to rotate freely.

Brake type selection

FDD series brakes are engineered for applications requiring high precision, low noise, and customizable response times, from smooth engagement to high-dynamic performance

Cases	Motor power supply	Brake coil power supply	Brake power supply designation	Braking system
1	CA	Dedicated AC	SA	FDD + rectifier
2		Dedicated DC	SD	FDD

Direct connection is feasible by selecting an SA motor supply. Customers must manage the wiring and ensure motor/brake voltage compatibility

BACK TO BRAKE

BRAKE | EVOX ELECTRIC MOTOR

BRAKE OPTION LIST DEEP DIVE

Brake type

FDD

High-performance DC brake type

EVOX motors are equipped with FDD series DC spring-applied electromagnetic brakes.
The brake assembly is bolted directly onto the motor rear shield for maximum compactness. A steel hub with an integrated anti-vibration device is shrunk onto the motor shaft, allowing the brake disc to slide axially with minimal noise and wear.

FDD brakes are engineered for high-performance operation, ensuring reliable torque and safe energy dissipation during both static holding and high-energy dynamic braking.
They ensure high dynamic response and low-noise operation, making them ideal for demanding industrial environments.
Operating characteristics can be optimized by selecting from the available NR or SR rectifier options and various wiring configurations to achieve the perfect balance between response time and energy efficiency.

For applications involving lifting and/or high hourly energy dissipation, contact Bonfiglioli's Technical Service

IP55

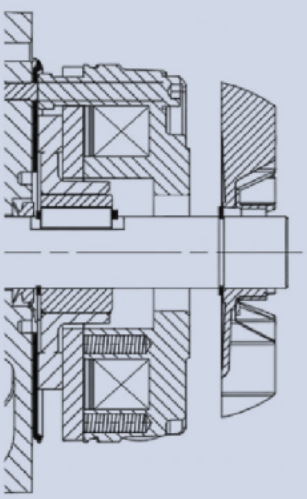

IP56

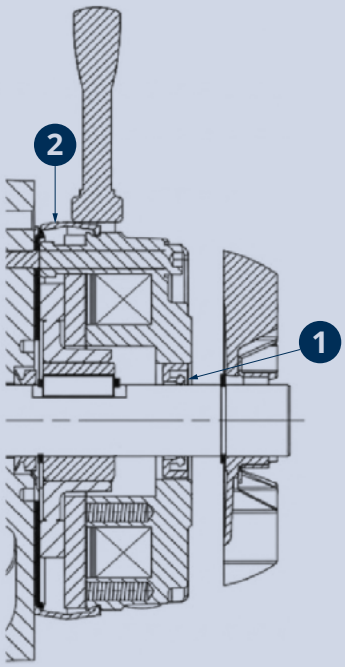

BXN, MXN and MNN brake motors comes with an IP55 protection degree as standard and it is possible to configure them with an IP56 as an option.
If IP56 is selected, the following construction variants will be applied:

1. Oil seal at N.D.E. of motor shaft
2. Dust and waterproof rubber seal

For FDD technical specifications, refer to the performance section

BACK TO BRAKE

OPTIONS | BRAKE

AC/DC rectifier type

The FD brake coil can be directly fed with DC current or by an AC/DC connection through a rectifier. A rectifier is a circuit that converts the Alternating Current (AC) input power into the Direct Current (DC) output power required by the brake coil (VDC ~ 0.45 * VAC or VDC ~ 0.9 * VAC).
EVOX motors are available in versions NR and SR, as detailed below:

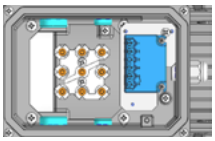

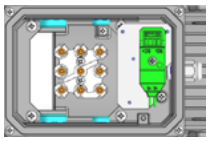

Motor size	Brake size	Standard variant [NR]	Option variant [SR]
BXN 63	FDD06S	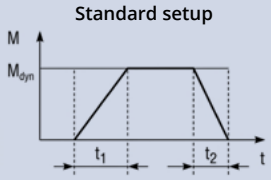	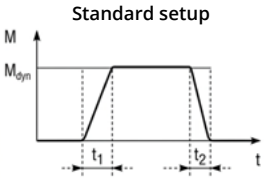
BXN 71	FDD06		
BXN 80	FDD08		
BXN 90	FDD10	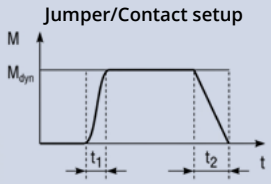	
BXN 100	FDD12		
BXN 112	FDD14		
BXN 132	FDD16		

Operating/switching times of the spring-applied brakes
t_1 Engagement time
t_2 Disengagement time (up to M = 0.1 M_{dyn})
M_{dyn} Braking torque at a constant speed of rotation

Schematic diagrams simplified for clarity to provide an insight into the brake's operating logic. For detailed technical data, please refer to the **Brake Performance chapter.**

NR

Standard Rectifiers

The NR is the standard bridge/half-wave rectifier used to provide the correct DC voltage to the brake coil based on the available AC mains supply.

- Fast Switching: It features a dedicated terminal for an external contact to implement a DC-side interruption (fast turn-off). This is essential for reducing braking response times in lifting applications or emergency stops.
- Compliance: cURus certified for voltages up to 270V AC. For higher voltages, the URus certified version is available.

SR

High-Performance Electronic Rectifier

The SR is an electronic overexcitation rectifier designed for high-dynamic applications. It optimizes brake performance through an intelligent current setup.

- Efficiency & Reliability: The electronic control optimizes the current setup (overexcitation), reducing thermal stress on the coil and allowing for high switching frequencies.
- Global Standard: Fully cURus certified across the entire supported voltage range, ensuring seamless global compliance.

BACK TO BRAKE

BRAKE | EVOX ELECTRIC MOTOR

OPTIONS | BRAKE

Brake hand release systems

Spring-applied brakes type FDD can be equipped with optional manual release devices. These are used to manually release the brake before servicing any machine or system components driven by the motor

Availability of the various release devices is indicated below:

	R
BXN_FDD	BXN 63 ... BXN 132

R

Lever with return spring

With this options, the return spring brings the release lever back in the original position.

Brake hand release lever position

AA

Release lever orientation

Unless otherwise specified, the release lever is located 90° away from the terminal box – identified by letters [AB] in the diagram on the right – in a clockwise direction on both R and RM options.

Alternative lever positions [AA], [AC] and [AD] are also possible when the corresponding option is specified.

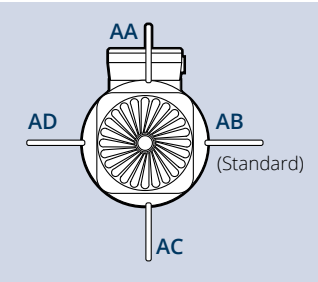

BACK TO BRAKE

Brake monitoring device

MRM

Release monitoring microswitch

This variant enable the brake release monitoring. It reads the position of the armature plate to confirm if the brake is physically Engaged or Released. All standard braking torque are available.

BXN size	Brake size	MRM Release monitoring
63	FDD 06S	
71	FDD 06	
80	FDD 08	
90	FDD 10	•
100	FDD 12	•
112	FDD 14	•
132	FDD 16	•

MWM

Wear monitoring microswitch

This variant enable the brake wear monitoring. It Monitors the Air Gap width. It triggers a signal when the gap exceeds the maximum tolerance due to friction material consumption, indicating that maintenance or adjustment is required.

BXN size	Brake size	MWM Wear monitoring
63	FDD 06S	
71	FDD 06	
80	FDD 08	
90	FDD 10	
100	FDD 12	•
112	FDD 14	•
132	FDD 16	•

Brake torque available on MWM

		1 x T_Mot	2 x T_Mot
63 BXN 100 LA	BFK 12	14	32
BXN 100 LB	BFK 12	18	46
BXN 112 M	BFK 14	25	55
BXN 132 S	BFK 16	35	70
BXN 132 M	BFK 16	45	100

BACK TO BRAKE

BRAKE | EVOX ELECTRIC MOTOR

MORE ON BRAKE OPTIONS

Separate brake supply

SA

Brake AC separate power supply

The brake rectifier is powered through an independent AC line, separate from the motor power supply.

FDD - NR/SR - SA: The rated AC voltage for the rectifier must be specified (e.g., SA 400 V AC).

SD

Brake DC separate power supply

The brake coil is directly powered with DC current. In this configuration, the rectifier is not present.

The rated coil voltage must be specified (e.g., SD 24 V DC).

Brake supply

230

FDD brake power supply

A rectifier installed inside the terminal box feeds the DC brake coil. Wiring between the rectifier and the brake coil is provided as factory standard.

The rectifier is typically supplied as a separate circuit to ensure compatibility with inverter-fed applications and different control logic. Connection to the motor terminal board (direct supply) can be performed by the user if required, provided the voltage levels are compatible.

Brake power supply voltage is specified in the following table and is independent of the mains frequency:

FDD-SD brake supply voltages

Motor size	Motor supply	Braking system supply	Voltage (V CC)
BXN 63 ... BXN 132 MXN 05 ... MXN 40	More options depending on the chosen winding	The brake coil is directly powered with DC	24
			48
			180
			205

Configurable for motors with 50HZ and 60HZ power supply

BACK TO BRAKE

MORE ON BRAKE OPTIONS

FDD-SA brake supply voltages

Motor size	Motor supply	Braking system supply	Voltage (V AC)
BXN 63 ... BXN 132 **MXN 05 ... MXN 40**	More options depending on the chosen winding and frequency	The brake rectifier is powered with a separate AC	110
			115
			120
			127
			200
			208
			220
			230
			240
			330
			380
			400
			415
			440
			460
			480
			360-500

Configurable for motors with 50HZ and 60HZ power supply

FDD brake connection

Whenever a separate brake power supply is required (e.g., for inverter operation), the connection to the rectifier must comply with the brake winding voltage stated on the motor nameplate.

Because of the highly inductive load, contacts used for brake control must belong to usage class AC-3 (for AC line interruption) or DC-13 (for DC line interruption) according to IEC 60947-4-1.

Table (1) – Brake coil with separate power supply and NR rectifier, a.c. line interruption.

Table (2) – Brake coil with separate power supply and NR rectifier, a.c. and d.c. lines interruption.

Table (3) – Brake coil with separate power supply and SR electronic rectifier, with integrated overexcitation and fast switching.

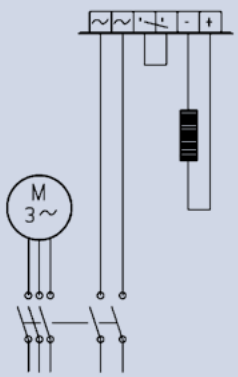

Table (1)
FDD | SA | NR

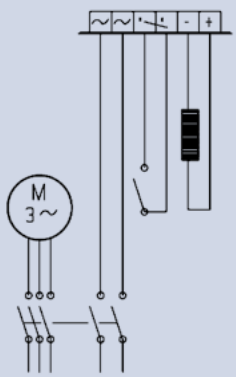

Table (2)
FDD | SA | NR

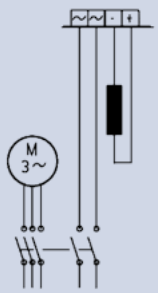

Table (3)
FDD | SA | SR

OPTIONS | EVOX ELECTRIC MOTOR SIDE

OPTION DESIGNATION - EVOX MOTORS

Motor + Brake + E3 H1 TP RV PS EN3 RC S2-10MIN CN

Certifications
- (Standard) CE, UKCA, UL
CN Global motor
BIS Indian market

Duty Cycle
- (Standard) S1 duty cycle. Continuous
S2-10MIN Duty Cycle S2. Duration: 10 min [black]
S2-30MIN Duty Cycle S2. Duration: 30 min
S2-60MIN Duty Cycle S2. Duration: 60 min
S3-25% Duty Cycle S3. Intermittance: 25%
S3-40% Duty Cycle S3. Intermittance: 40%
S3-70% Duty Cycle S3. Intermittance: 70%

External protection
- (Standard) No external protection
RC Rain protection cover
TC Textile canopy
EC Encoder protection cover

Feedback units
- (Standard) Without encoder
EN1 Incremental encoder, Vin=5V, line-driver output RS 421
EN2 Incremental encoder, Vin=10-30V, line-driver output RS 422
EN3 Incremental encoder, Vin=12-30V, push-pull output 12-30V
EN4 Encoder sin/cos, Vin=4,5-5,5V, output Sinus 0,5Vpp
EN5 Absolute encoder single-turn, HIPERFACE® interface, Vin=7-12V
EN6 Absolute encoder multi-turn, HIPERFACE® interface, Vin=7-12V

Double shaft extension
- (Standard) Without double shaft extension
PS With double shaft extension

Rotor balancing grade B
- (Standard) Without rotor balancing
RV With rotor balancing

Tropicalization
- (Standard) Without tropicalization
TP Tropicalization

Anti-condensation heaters
- (Standard) Without anti-condensation heaters
H1 Anti-condensation heaters supply voltage 230 V
NH1 Anti-condensation heaters supply voltage 115 V

Thermal protection
- (Standard) Without thermal protection
E3 Thermal sensors, triggers a signal at a specific temperature (CLF: 150° & CLH:180°)
D3 Thermal switch, switches off the motor at a specific temperature (CLF: 150° & CLH:180°)
PT1000 Resistance thermometer
E3+PT1000 Thermal sensor + thermometer
D3+PT1000 Thermal switch + thermometer

...(1)	+	AC	RAL5010	C3

Surface protection

- (Standard) C2 protection

C3
C4

For C5 according to UNI EN ISO 12944-2, please contact our Technical Customer Support for further details

Painting

- (Standard) not painted
RAL7042 Traffic Grey A
RAL5010 Gentian Blue
RAL9005 Jet Black
RAL9006 White aluminium
RAL9010 Pure White
RAL7035 Light Grey
RAL7001 Silver Grey
RAL7037 Dusty Grey
RAL5015 Sky Blue
RAL5024 Pastel blue

Certificates

- (Standard) Without certificate
AC Gear unit compliance certificate
ACM Motor compliance certificate
CC Inspection certificate

(1) Those options are available for Gear Units, Gearmotors, Gear brake motors, Stand alone motors and Stand alone Brake motors

BACK TO OPTION LIST

OPTIONS | EVOX ELECTRIC MOTOR SIDE

OPTION DETAIL

Duty Cycle

Unless specified, catalogue motor power refers to continuous duty S1. Any different condition has to be classified in the correct Duty Cycle, according with CEI EN 60034-1.

S2-...MIN

S2 Duty Cycle (Limited duration duty)

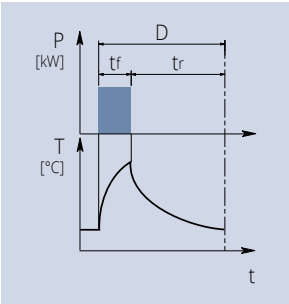

This type of duty is characterized by operation at a constant load for a limited time [t_f], which is shorter than the time required to reach thermal balance, followed by an idle period [t_r] where the motor can return to the ambient temperature.

The duration of the duty cycle is: D=tf+tr

t_f = operating time under constant load

t_r = idle period

S3-...%

S3 Duty Cycle (Periodical intermittent duty)

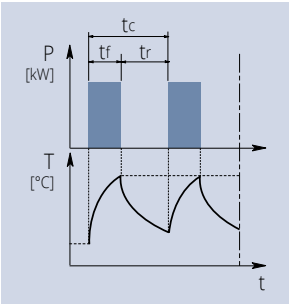

This type of duty is characterized by a sequence of identical operation cycles formed by a constant load operation and an idle period.

For this type of duty, the starting current does not significantly affect overtemperature.

t_f = operating time under constant load

t_r = idle period

t_c = cycle time

$$I = \frac{t_f}{t_f + t_r} \cdot 100$$

t_f = operating time under constant load

t_r = idle period

For a S2 & S3 duty cycle motor, the required motor power should be multiplied by the coefficient reported in the following table.

	Service Duty						
	S2			S3			S4 - S9
	D (min)			Intermittance (I)			Contact us
	10	30	60	25%	40%	70%	
f_m	1.35	1.15	1.05	1.25	1.15	1.1	

If cycles from S2 to S9 are chosen, the motor nameplate will be marked with the cycle name, an increased power rating and electrical data to suit the type of duty.

For further details, please contact Bonfiglioli's Technical Service

BACK TO
OPTION LIST

Thermal protection

In addition to the standard protection provided by the magneto-thermal device, motors can be supplied with built-in thermal probes to protect the winding against overheating caused by severe and demanding application or by an insufficient ventilation of the environment.

This additional protection is highly recommended on servo-ventilated motors (IC416).

E3

Thermistors

These are semi-conductors having rapid resistance variation when they are close to the rated switch off temperature (150°C for CLF or 180° for CLH insulation class). Variations of the R=f(T) characteristic are specified under DIN 44081, IEC 34-11 Standards. Positive temperature coefficient thermistors are normally used (also known as PTC "cold conductor resistors"). Usually this kind of thermal protection is easy to be found on inverters.

Thermistors cannot control relays directly and must be connected to a suitable disconnect device. Thus protected, three PTCs connected in series are installed in the winding, the terminals of which are located on the auxiliary terminal-board.

D3

Bimetallic thermostats

These types of protective devices house a bimetal disk. Bimetal switches operate on the principle of mechanical deformation as a result of long-term heating. Bimetal strips bent as a result of such heating have a spring action that results in sudden reversal of the curvature (concave to convex or vice-versa).

When the rated switch off temperature temperature (150°C for CLF or 180° for CLH insulation class) is reached, these temperature detectors (NC contacts) can deactivate an auxiliary circuit. The circuit can only be reclosed following a considerable fall in temperature. Three bimetallic thermostats connected in series are usually employed, with normally closed contacts. The terminals are located on an auxiliary terminal-board.

Bimetal switches are suitable protection devices in the case of slowly rising motor temperatures. When the motor current rises quickly (e.g. with a locked rotor), these switches are not suitable due to their large thermal time constants.

BACK TO OPTION LIST

OPTIONS | EVOX ELECTRIC MOTOR SIDE

OPTION DETAIL

PT1000

Resistance thermometer

The resistance thermometer has a chip for a temperature sensor, the resistance of which changes in relation to temperature according to a series of reproducible basic values. The changes in resistance are transferred as changes in current.

At 0 °C, the measurement resistances are adjusted to 1000 Ω for the Pt1000 and correspond to the accuracy class B (i.e. the relationship between resistance and temperature). The limit deviation is ±0.3 °C, and the admissible deviations are defined in EN 60751. The Pt1000 resistance thermometer will, in the future, gradually replace the KTY84-130 temperature sensors available today. The relationship between the temperature and the electrical resistance of conductors is utilized in the Pt1000 to measure the temperature, just like with the additional resistance thermometers described above. Pure metals undergo larger changes in resistance than alloys and have a relatively constant temperature coefficient.

°C	Ω	°C	Ω
-40	843	110	1,423
-30	882	120	1,461
-20	922	130	1,498
-10	961	140	1,536
0	1,000	150	1,573
10	1,039	160	1,611
20	1,078	170	1,648
30	1,117	180	1,685
40	1,155	190	1,722
50	1,194	200	1,759
60	1,232	210	1,795
70	1,271	220	1,832
80	1,309	230	1,868
90	1,347	240	1,905
100	1,385	250	1,941

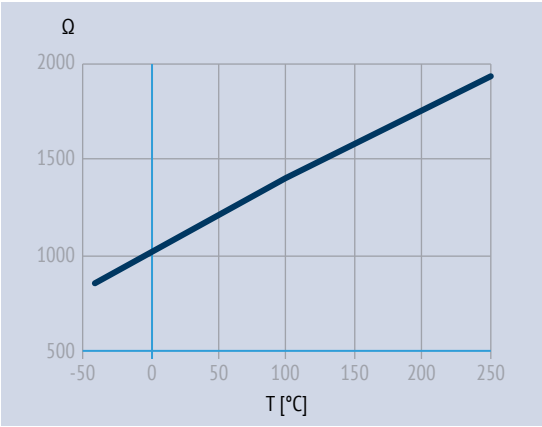

For applications requiring both simplified winding temperature control via inverter and constant temperature monitoring, the following bundles, combining a thermal probe/bimetallic switch with a PT1000 thermometer, are available.

E3+PT1000 Thermal sensor + thermometer

D3+PT1000 Thermal switch + thermometer

BACK TO
OPTION LIST

Feedback units

Motors can be combined with six different types of encoders in order to achieve feedback circuits. The installation requires an expansion module which depends on the type of the encoder selected.

Configurations with double-extended shaft (PS) and rain/fabric canopy (RC, TC) are not compatible with encoder installation.

EN1 **EN2** **EN3**

Incremental encoder

These encoders are speed sensors obtained with optic-electronic technology and can be utilized as speed transducers. They are composed by an electric circuit and an optic disk integral with the shaft. Usually, there are 2 main standards for incremental encoder outputs: Push-pull and Line driver. The first one is useful in case of long wirings, the second one for applications in high electromagnetic pollution environments.

EN4

SIN/COS encoder

These encoders are both speed and position sensors obtained with optic-electronic technology and can be used as position and speed transducers at the same time. Usually employed for applications that require very high dynamic features.

EN5 **EN6**

Absolute encoder

These encoders are position sensors obtained with optic-electronic technology and can be utilized as position transducers. Usually employed for applications that require high precision

		EN1	EN2	EN3	EN4	EN5	EN6
Encoder type		Incremental	Incremental	Incremental	sin/cos	Absolute single turn	Absolute multi-turn
Output interface		TTL/RS 442	TTL/RS 442	HTL push-pull	Sinus VPP 0.5	HIPERFACE®	HIPERFACE®
Power supply voltage VIN	[V]	4 ... 6	10 ... 30	12 ... 30	4.4 ... 5.5	7 ... 12	7 ... 12
Output voltage	[V]	5	5	12 ... 30	-	-	-
Current in unloaded conditions	[mA]	120	100	100	40	80	80
Pulses per revolution		1024					
Steps per revolution		-	-	-	-	15 bit	15 bit
Revolutions		-	-	-	-	-	12 bit
Number of signals		6 (A, B, Z + inverted signals)			6 (cos-, cos+, sin-, sin+, Z, Z̄)	-	-
Max. output frequency	[kHz]	600			200		
Max. speed	[rpm]	6,000 (9,000 rpm for 10s)					
Temperature range	[°C]	-30 ... +100					
Protection class		IP65					

The Bonfiglioli ACU and ANG inverter series can manage all 6 types of encoders mentioned above and can be easily selected through the product configurator platform.

BACK TO OPTION LIST

OPTIONS | EVOX ELECTRIC MOTOR SIDE

OPTION DETAIL

Anti-condensation heaters

H1

Anti-condensation heaters

Where an application involves high humidity or extreme temperature fluctuations, e.g. inactive motors in humid atmospheres or motors that are subject to widely fluctuating temperatures, motors may be equipped with an anti-condensate heater. A single-phase power supply is available in the auxiliary terminal board inside the main terminal box.

Values for the absorbed power are listed below:

	H1 1~230V ± 10% P[W]	NH1 1~115V ± 10% P[W]
BXN 63 ... BXN 80	10	10
BXN 90 ... BXN 132	25	25

Warning! Always cut off the anti-condensation heater power before operating the motor.

Tropicalization

TP

Tropicalization

The TP option uses stators that are impregnated with highly hydrolysis-resistant resins. This allows the motors to be used in areas with increased air humidity and temperature, such as in tropical climate conditions.

The used wiring insulation materials and the impregnating resin protect the motor against termite-related damage

Second shaft extension

PS

Second shaft extension

The PS option provides the motor for an additional shaft end. This second shaft end is designed with a conventional keyway and key in accordance with DIN 6885 Sheet 1 (ISO 773).

This option is not compatible with variants RC, TC, EC, U1, EN1, EN2, EN3, EN4, EN5, EN6. For shaft dimensions please see motor dimensions tables.

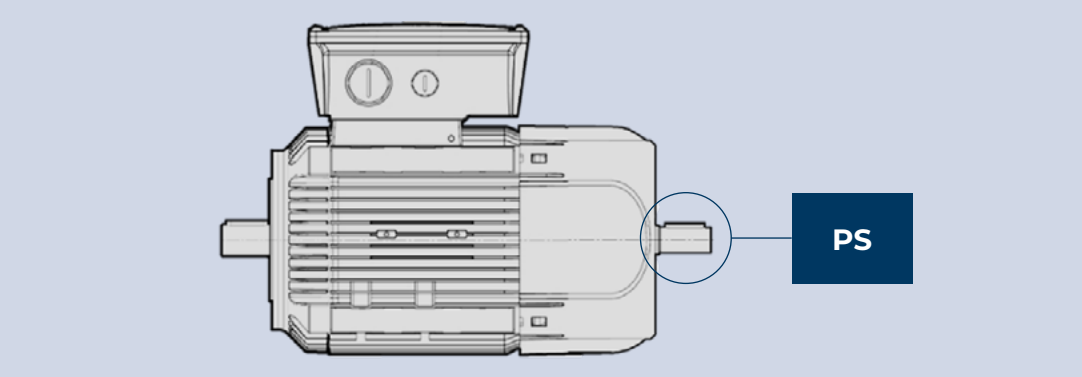

BACK TO
OPTION LIST

External protection

External protection canopies are used to prevent damages caused by external conditions, such as rain or cellulose particles to the electrical motor.

RC

Rain canopy

The rain canopy protects the motor from dripping and avoids the penetration of solid bodies. It is recommended when motor is installed in a vertical position with the shaft downwards. Only in this position a perfect coverage from rain is granted. The guard extends the length of the motor or brake motor. Please check the **dimensions table**.

The drip cover is not compatible with variants PS, EN1, EN2, EN3, EN4, EN5, EN6.

Note: available only in plastic material when combined with plastic fan cover

TC

Textile canopy

Option TC is a cover variant for textile industry environments, where lint may obstruct the fan grid and prevent a regular flow of cooling air. The overall dimensions are the same as drip cover type RC.

This option with variants PS, EN1, EN2, EN3, EN4, EN5, EN6.

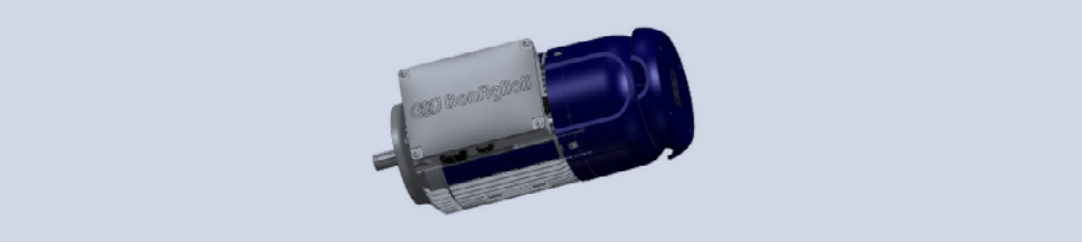

Note: available only in plastic material when combined with plastic fan cover

EC

Encoder canopy

Option EC is a cover variant specifically made for our encoders. It protects them from impacts and may help in prolonging their productive life.

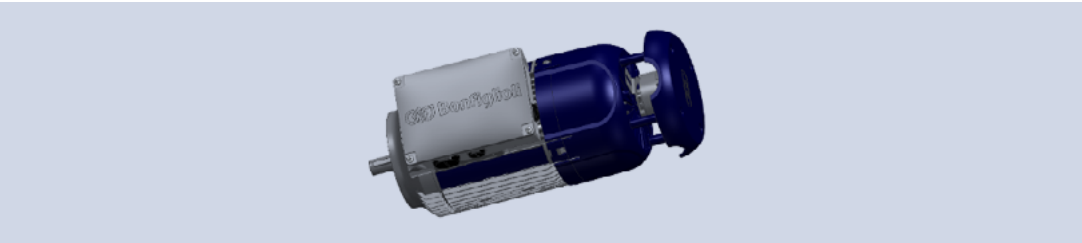

Note: available only in plastic material when combined with plastic fan cover

BACK TO
OPTION LIST

OPTIONS | EVOX ELECTRIC MOTOR

MORE ON OPTIONS LIST

Certifications

CN

Global motor

With the CN option, BXN and MXN motors can be sold in the most important markets worldwide such as Europe, UK, USA, Canada, China, Russia, Australia and New Zealand.
In detail, the motor will bear the CE, UKCA, UL, CCC and, where required, CEL labelling on the nameplate. The motors also comply with EAC and EECA requirements.

This option is available in the following winding/power combinations:

Motor series	Size	Power	Service Duty	Winding
BXN	63MA a 80MA	0,12 a 0,55 kW	S1	WD1 - WD3*
MXN	05MA a 20MA			
BXN	80MB a 112M	0,75 a 4 kW	S1	WD1
MXN	20MB a 35M			
BXN	132S a 132M	5,5 a 7,5 kW	S1	WD2

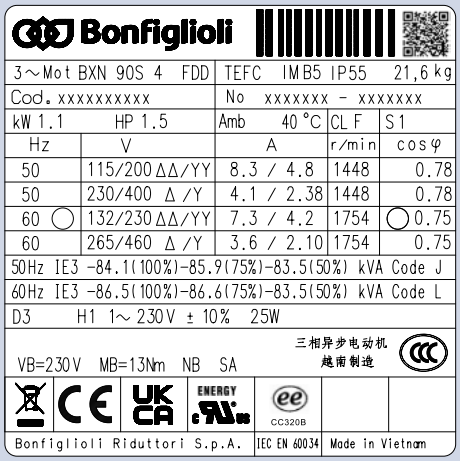

* Brazilian certification is standard on the WD3 winding only, and additional INMETRO labelling is provided.

BACK TO OPTION LIST

BIS

Indian market

With the BIS option, BXN and MXN motors can be sold in the most important markets worldwide such as Europe, UK, USA, Canada, India, Russia, Australia and New Zealand.
In detail, the motor will bear the CE, UKCA, UL, ISI marks on the nameplate. The motors also comply with EAC and EECA requirements.

This option is available on the following windings:

Motor series	Size	Power	Winding
BXN	63MA a 112M	0,12 a 4 kW	WD1 - WD2 - WD3 - WD5 - WD6
MXN	05MA a 35M		
BXN	132S a 132M	5,5 a 7,5kW	WD8 - WD2 - WD11 - WD6 - WD9
MXN	40S a 40M		

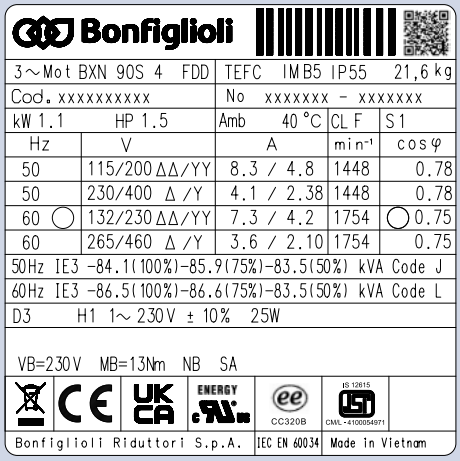

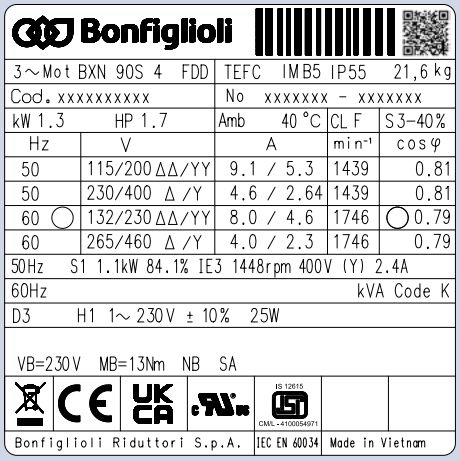

Certificates

ACM

Motor certificate of compliance

The document certifies the compliance of the product with the purchase order and the construction in conformity with the applicable procedures of Bonfiglioli's Quality System.

CC

Inspection certificate

The document entails checking the order compliance, visual inspection of external conditions and instrumental testing of the electrical characteristics in unloaded conditions. Inspected units are sampled within the shipping batch and marked individually.

EVOX ELECTRIC MOTOR DIMENSION

STANDARD MOTOR WITHOUT BRAKE

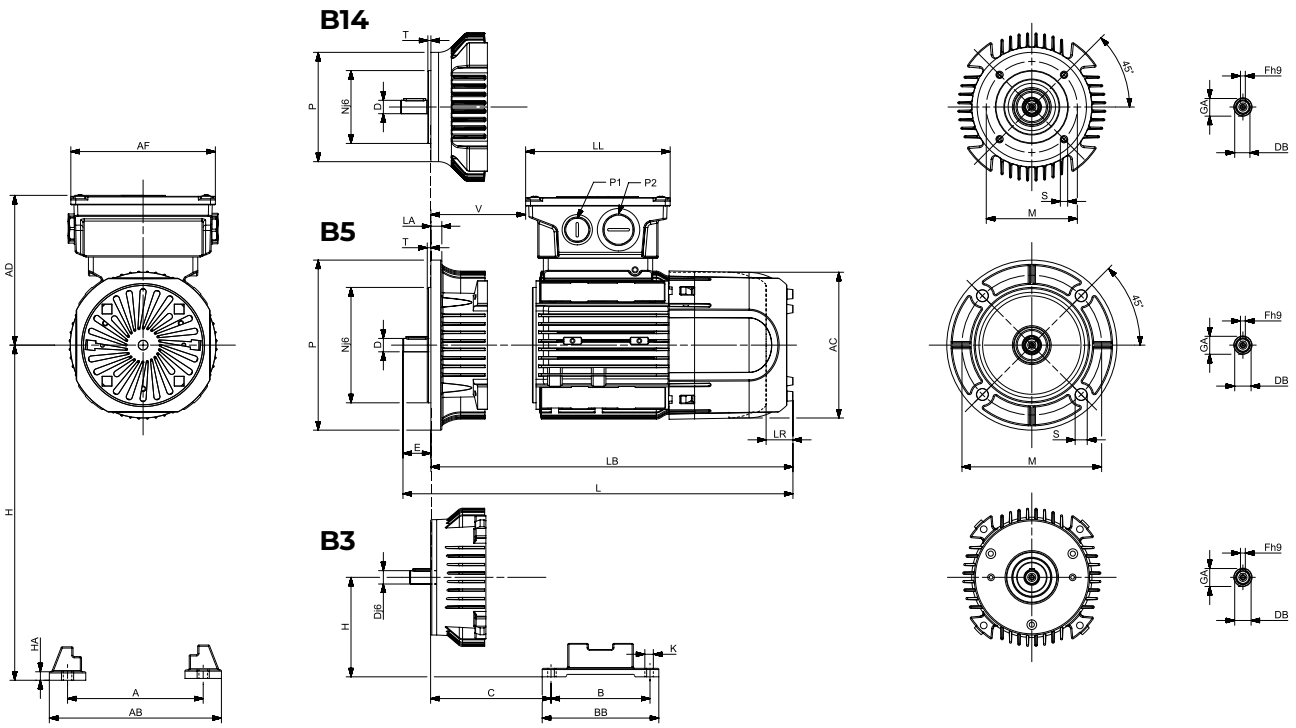

Motor size	Output shaft					Motor overall dimensions										Terminal box and cable entry		
	D	E	DB	GA	F	AC	L (sheet metal)	L (plastic)	LB (sheet metal)	LB (plastic)	LR	AD	AF	LL	V	P1	P2	Terminal box size
	[mm]					[mm]												
BXN63	11	23	M4	12.5	4	122	259	281	236	258	22	122.3	119	119	38	M25	M16	S
BXN71	14	30	M5	16	5	138	272	292	242	261.5	19.5	123.3	119	119	35	M25	M16	S
BXN80	19	40	M6	21.5	6	158	329.7	346	289.7	306	16.3	132.8	119	119	41	M25	M16	S
BXN90	24	50	M8	27	8	177	338.5	365	288.5	315	26.5	143.8	128	128	47	M25	M16	S
BXN100	28	60	M10	31	8	192	418	-	358	-	-	152.3	128	128	46	M25	M16	S
BXN112	28	60	M10	31	8	220	421.5	-	361.5	-	-	163.8	128	128	65.5	M25	M16	S
BXN132	38	80	M12	41	10	255	533.4	-	453.4	-	-	213	147.2	192	63	M32	M16	L

"S" refers to the terminal box size S while "L" refers to the terminal box size L.

Motor size	B5 Version						B14 Version				
	M	N	P	S	T	LA	M	N	P	S	T
	[mm]						[mm]				
BXN63	115	95	140	9.5	3	9	75	60	90	M5	2.5
BXN71	130	110	160	9.5	3.5	9	85	70	105	M6	2.5
BXN80	165	130	200	11.5	3.5	10	100	80	120	M6	3
BXN90	165	130	200	11.5	3.5	10	115	95	140	M8	3
BXN100	215	180	250	14	4	11	130	110	160	M8	3.5
BXN112	215	180	250	14	4	11	130	110	160	M8	3.5
BXN132	265	230	300	14	4	12	165	130	200	M8	4

Motor size	B3 Version							
	B	A	HA	BB	AB	K	C	H
	[mm]							
BXN63	80	100	8	96	120	7	40	63
BXN71	90	112	8	112	135	7	45	71
BXN80	100	125	8	124	153	10	50	80
BXN90S	100	140	8	155	174	10	56	90
BXN90L	125	140	8	155	174	10	56	90
BXN100	140	160	10	175	202	12	63	100
BXN112	140	190	10	175	224	12	70	112
BXN132S	140	216	12	218	254	12	89	132
BXN132M	178	216	12	218	254	12	89	132

STANDARD MOTOR WITH BRAKE

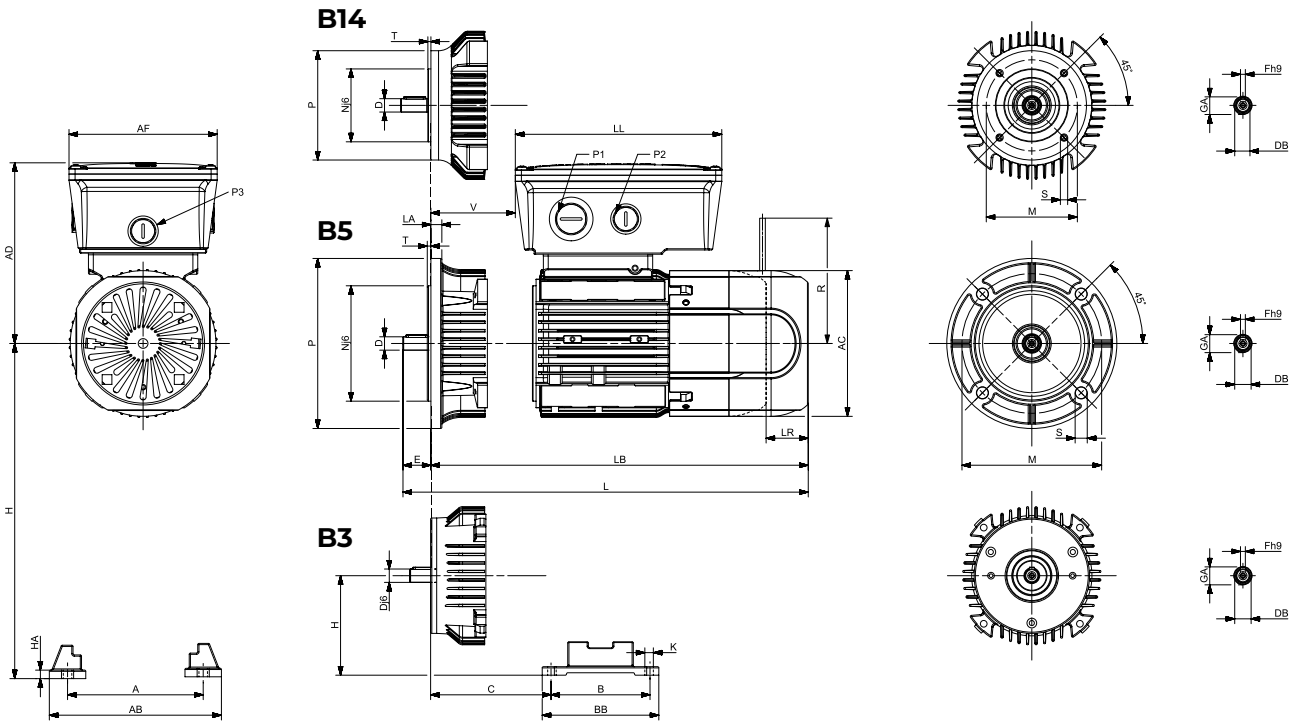

Motor size	Output shaft					Motor overall dimensions										Terminal box and cable entry				R
	D	E	DB	GA	F	AC	L (sheet metal)	L (plastic)	LB (sheet metal)	LB (plastic)	LR	AD	AF	LL	V	P1	P2	P3	Terminal box size	
	[mm]					[mm]														
BXN63	11	23	M4	12.5	4	122	293.7	328	270.7	305	34.3	136	112	165	37	M20	M16	M16	L	106
BXN71	14	30	M5	16	5	138	316.1	351	286.1	321	34.9	138	112	165	34	M25	M16	M16	L	106
BXN80	19	40	M6	21.5	6	158	378.8	417	338.8	377	38.2	148	112	165	40	M25	M16	M16	L	115
BXN90	24	50	M8	27	8	177	388.5	-	338.5	-	-	170	122	170	43	M25	M16	M16	L	131
BXN100	28	60	M10	31	8	192	475	-	415	-	-	179	122	170	42	M25	M16	M16	L	161
BXN112	28	60	M10	31	8	220	489.5	-	429.5	-	-	191	122	170	62	M25	M16	M16	L	193
BXN132	38	80	M12	41	10	255	606.9	-	527.4	-	-	216	147.2	192	63	M32	M16	M16	L	239

"S" refers to the terminal box size S while "L" refers to the terminal box size L.

Motor size	B5 Version						B14 Version				
	M	N	P	S	T	LA	M	N	P	S	T
	[mm]						[mm]				
BXN63	115	95	140	9.5	3	9	75	60	90	M5	2.5
BXN71	130	110	160	9.5	3.5	9	85	70	105	M6	2.5
BXN80	165	130	200	11.5	3.5	10	100	80	120	M6	3
BXN90	165	130	200	11.5	3.5	10	115	95	140	M8	3
BXN100	215	180	250	14	4	11	130	110	160	M8	3.5
BXN112	215	180	250	14	4	11	130	110	160	M8	3.5
BXN132	265	230	300	14	4	12	165	130	200	M8	4

Motor size	B3 Version							
	B	A	HA	BB	AB	K	C	H
	[mm]							
BXN63	80	100	8	96	120	7	40	63
BXN71	90	112	8	112	135	7	45	71
BXN80	100	125	8	124	153	10	50	80
BXN90S	100	140	8	155	174	10	56	90
BXN90L	125	140	8	155	174	10	56	90
BXN100	140	160	10	175	202	12	63	100
BXN112	140	190	10	175	224	12	70	112
BXN132S	140	216	12	218	254	12	89	132
BXN132M	178	216	12	218	254	12	89	132

EVOX ELECTRIC MOTOR DIMENSION

BRAKE AND E-MOTOR OPTIONS

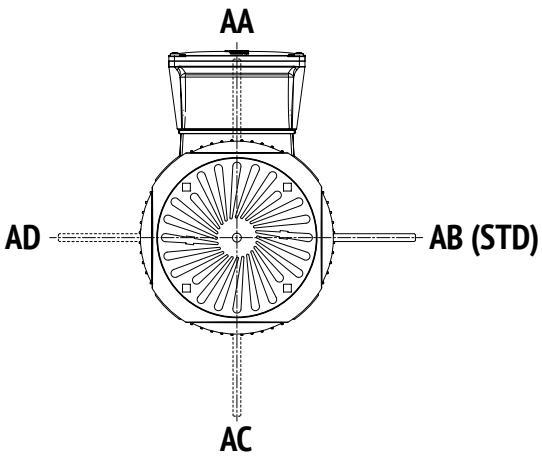

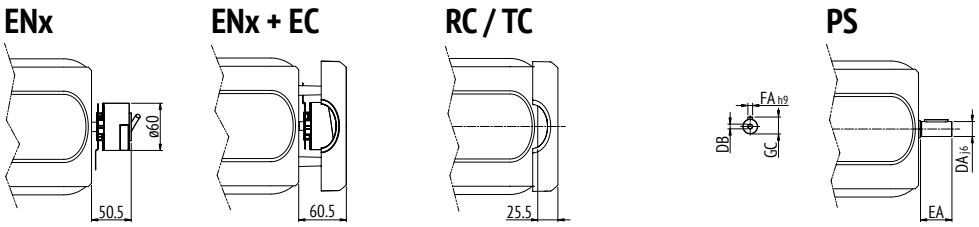

Motor size	PS Motor shaft double end				
	DA	EA	DB	GC	FA
			[mm]		
BXN63	9	20	M3	10.2	3
BXN71	11	23	M4	12.5	4
BXN80	14	30	M5	16	5
BXN90	19	40	M6	21.5	6
BXN100	24	50	M8	27	8
BXN112	24	50	M8	27	8
BXN132	28	60	M10	31	8

Order info

Our worldwide presence

Thanks to an international network of closely interconnected commercial and production sites, we can guarantee the same high standards of Bonfiglioli quality anywhere at any given time. We know that our direct presence in local markets is the key to long-lasting success, so our family includes 18 production sites, 24 commercial sites and more than 550 distributors around the world.

Our organization is always close by, offering complete and efficient solutions and supporting our customers with dedicated services, co-engineering and after-sales assistance.

18 PRODUCTION SITES

24 COMMERCIAL SITES

80 COUNTRIES

550 DISTRIBUTORS

~5,000 PEOPLE

BR_CAT_EVOX_STD_ENG_R06_3

Bonfiglioli global locations

AUSTRALIA
Bonfiglioli Transmission (Aust.) Pty Ltd
Plumpton NSW

BRAZIL
Bonfiglioli Redutores do Brasil Ltda
São Bernardo do Campo - São Paulo

CHINA
Bonfiglioli Drives (Shanghai) Co. Ltd.
Shanghai

Selcom Electronics (Shanghai) Co., Ltd
Shanghai

Shanghai

FRANCE
Bonfiglioli Transmission S.A.S.
Marly la Ville

GERMANY
Bonfiglioli Deutschland GmbH
Neuss

Bonfiglioli Deutschland GmbH
Krefeld

O&K Antriebstechnik GmbH
Hattingen

INDIA
Bonfiglioli Transmission Ltd.
Mobility & Wind Industries
Thirumudivakkam
Kancheepuram - Tamil Nadu

Industry & Automation Solutions
Mannur Village, Sriperumbudur Taluk
Kancheepuram - Tamil Nadu

Industry & Automation Solutions
Pune - Maharashtra

ITALY
Bonfiglioli Riduttori S.p.A.
Industry & Automation Solutions
Calderara di Reno (BO)

Industry & Automation Solutions
Carpiano

Mobility & Wind Industries
Forlì

Industry & Automation Solutions
Rovereto

Selcom Group S.p.A.
Castel Maggiore (BO)

Castel Maggiore (BO)

Cadriano (BO)

NEW ZEALAND
Bonfiglioli Transmission (Aust.) Pty Ltd
Auckland - Ellerslie

SINGAPORE
Bonfiglioli South East Asia Pte Ltd
Singapore

SLOVAKIA
Bonfiglioli Slovakia s.r.o.
Považská Bystrica

SOUTH AFRICA
Bonfiglioli South Africa Pty Ltd.
Johannesburg

SOUTH KOREA
Bonfiglioli Korea Co., Ltd.
Busan

SPAIN
Tecnotrans Bonfiglioli S.A
Castellbisbal - Barcelona

TURKEY
Bonfiglioli Türkiye Jsc
Çiğli - Izmir

UNITED KINGDOM
Bonfiglioli UK Ltd.
Warrington - Cheshire

USA
Bonfiglioli USA Inc.
Hebron - Kentucky

VIETNAM
Bonfiglioli Vietnam Co. Ltd.
Ben Cat city, Binh Duong province

PRODUCTION | ASSEMBLY | SALES | SERVICE

Bonfiglioli

We have a relentless commitment to excellence, innovation & sustainability. Our team creates, distributes and services world-class power transmission & drive solutions to keep the world in motion.

HEADQUARTERS

Bonfiglioli S.p.A.
Via Cav. Clementino Bonfiglioli, 1
40012 Calderara di Reno - Bologna (Italy)
Tel. +39 051 6473111